HAWAII COMMUNITY DEVELOPMENT AUTHORITY

STATE OF HAWAII

KAKA'AKO COMMUNITY DEVELOPMENT DISTRICT

IMPROVEMENT DISTRICT 3 - PACKAGES A & B

PACKAGE A — COOKE STREET - STATION 20 + 47.57 TO KING STREET
KAPIOLANI BOULEVARD - KING STREET TO COOKE STREET

PACKAGE B — COOKE STREET - POHUKAINA STREET TO STATION 20 + 47.57
HALEKAUWILA STREET - SOUTH STREET TO KOULA STREET
VICTORIA STREET - KING STREET TO YOUNG STREET

AS BUILT TRACINGS
CERTIFIED BY: _____ ENGINEER DATE 4/26/95
APPROVED BY: _____ DATE _____

PREPARED BY:
PAREN, INC.
dba Park Engineering
ENGINEERS AND SURVEYORS

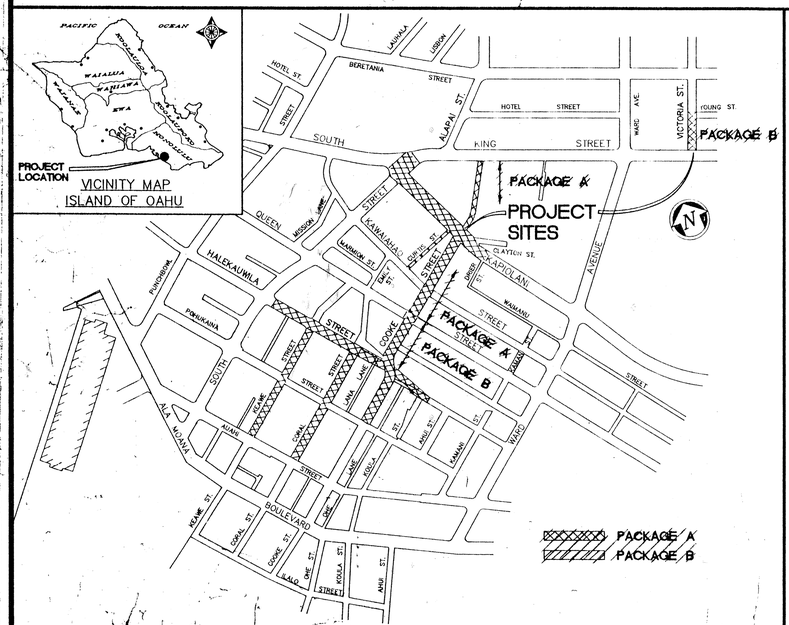

LOCATION MAP

NOT TO SCALE

T.M.K.: 2-1-46, 47, 48 & 51

INDEX OF DRAWINGS

DESCRIPTION	SHEET NO.	DELETED SHEET NO.
TITLE SHEET	1	
GENERAL SITE PLAN	2	
DRAINAGE PLAN	3	
NOTES	4 - 6	
TYPICAL ROAD SECTIONS AND MISCELLANEOUS DETAILS	7	
PLAN AND PROFILE		8 - 11
COOKE STREET	11A - 15	
HALEKAUWILA STREET	16 - 19,19A	
KAPIOLANI BOULEVARD	24 - 25,25A	20 - 23
GRADE ADJUSTMENT PLAN	25B	
STRUCTURAL DETAILS	26 - 41,27A,38	29, 31, 32, 36,
MISCELLANEOUS SEWER DETAILS	42	
DETECTOR CHECK & COMPOUND METER CONNECTION DETAILS	43	44, 45
CURB RETURN GRADES	47 - 48	46
BORING LOGS	49	
CROSS SECTIONS	51A, 52 - 55	50, 51, 56 - 58
SIGNING AND STRIPING PLAN	62A, 63 - 66, 69,69A	59 - 62, 67, 68
DETAILS - SIGNING AND STRIPING	70 - 72	
TRAFFIC CONTROL PLAN	73, 74 - 76	75
BEDDING DETAILS	77	
STREET TREE PLANTING DETAIL	78	
IRRIGATION PLAN		79
WATERLINE PROFILES	80, 80A	
VICTORIA STREET	80B, 80C	
ELECTRICAL	E-1 - E-54	

APPROVED:

EXECUTIVE DIRECTOR, HAWAII COMMUNITY DEVELOPMENT AUTHORITY STATE OF HAWAII	DATE 1-11-90
DIRECTOR AND CHIEF ENGINEER, DEPARTMENT OF PUBLIC WORKS CITY AND COUNTY OF HONOLULU	DATE 6-20-89
DIRECTOR, DEPARTMENT OF TRANSPORTATION SERVICES CITY AND COUNTY OF HONOLULU	DATE 1/12/89
MANAGER AND CHIEF ENGINEER, BOARD OF WATER SUPPLY CITY AND COUNTY OF HONOLULU	DATE 10/1/89
DIRECTOR, DEPARTMENT OF PARKS AND RECREATION CITY AND COUNTY OF HONOLULU	DATE 8-4-89
FIRE CHIEF, HONOLULU FIRE DEPARTMENT CITY AND COUNTY OF HONOLULU	DATE 4/11/89
CHIEF, ENVIRONMENTAL PROTECTION AND HEALTH SERVICES DEPARTMENT OF HEALTH, STATE OF HAWAII	DATE 3-3-89
DIRECTOR, DEPARTMENT OF LAND UTILIZATION CITY AND COUNTY OF HONOLULU	DATE 6/15/89

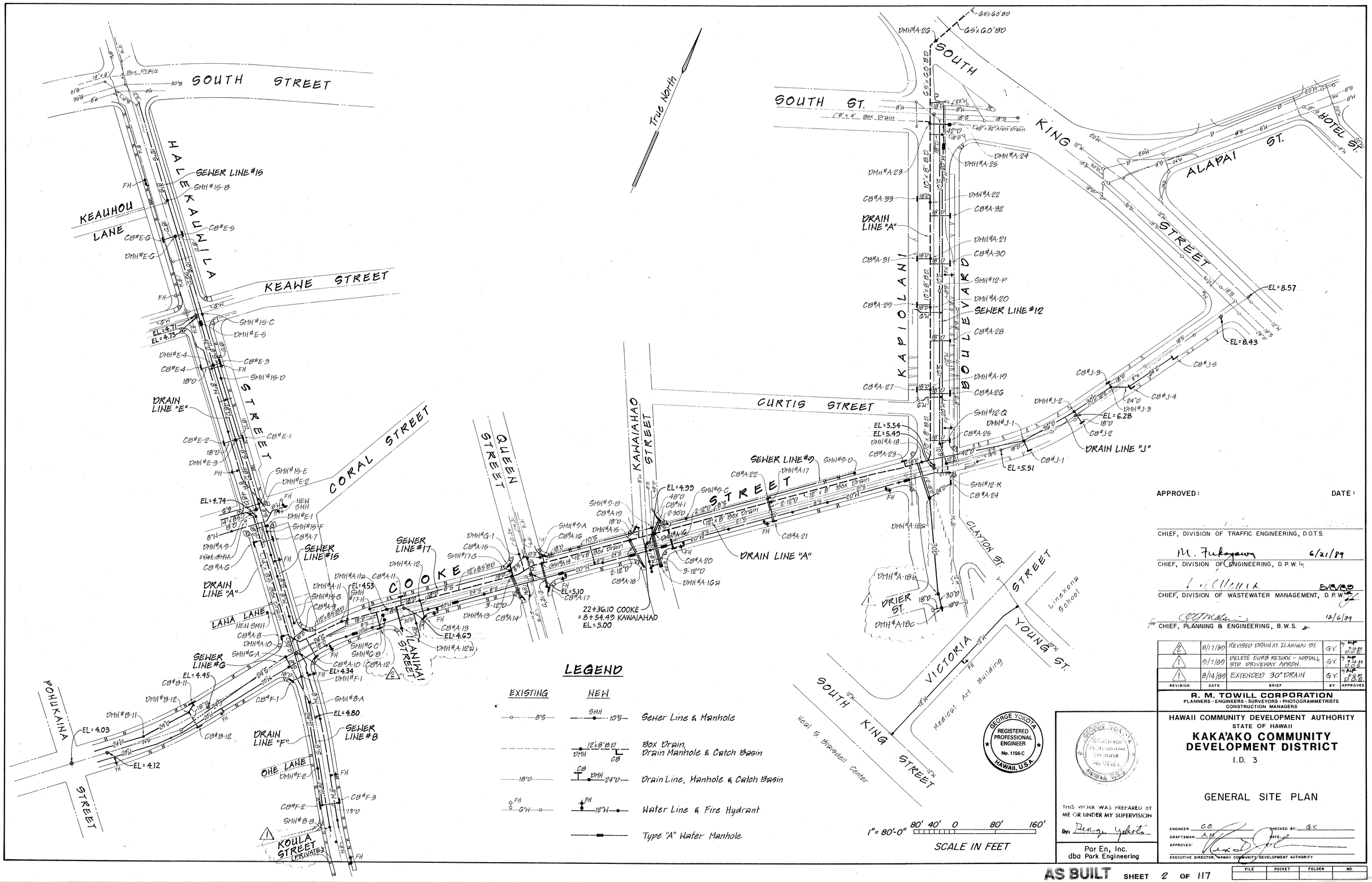

APPROVED: DATE:

CHIEF, DIVISION OF TRAFFIC ENGINEERING, D.O.T.S.

M. Fukagawa 6/21/89

CHIEF, DIVISION OF ENGINEERING, D.P.W.

5/8/89

CHIEF, DIVISION OF WASTEWATER MANAGEMENT, D.P.W.

for 12/6/89

CHIEF, PLANNING & ENGINEERING, B.W.S.

REVISION	DATE	BRIEF	BY	APPROVED
2	8/17/89	REVISED DRAIN AT ILANIWAI ST.	G.Y.	by 9-14-89 D.O.E.
1	9/7/89	DELETE CURB RETURN – INSTALL STD. DRIVEWAY APRON.	G.Y.	by 9-14-89 D.O.E.
1	8/14/89	EXTENDED 30" DRAIN	G.Y.	by 8-16-89 D.O.E.

R. M. TOWILL CORPORATION
PLANNERS · ENGINEERS · SURVEYORS · PHOTOGRAMMETRISTS
CONSTRUCTION MANAGERS

HAWAII COMMUNITY DEVELOPMENT AUTHORITY
STATE OF HAWAII

KAKA'AKO COMMUNITY DEVELOPMENT DISTRICT

I.D. 3

GENERAL SITE PLAN

THIS WORK WAS PREPARED BY ME OR UNDER MY SUPERVISION

By: George Yokota

Par En, Inc.
dba Park Engineering

ENGINEER: C.O. CHECKED BY: G.Y.
DRAFTSMAN: A.M. DATE:
APPROVED:
EXECUTIVE DIRECTOR, HAWAII COMMUNITY DEVELOPMENT AUTHORITY

AS BUILT SHEET 2 OF 117

FILE	POCKET	FOLDER	NO.

SOUTH STREET
HALEKAUWILA STREET
KEAUHOU LANE
KEAWE STREET
CORAL STREET
QUEEN STREET
KAWAIAHAO STREET
COOKE STREET
LANA LANE
ILANIHAI ST.
POHUKAINA STREET
OHE LANE
KOULA STREET (PRIVATE)
CURTIS STREET
KAPIOLANI BLVD
KING STREET
ALAPAI STREET
DRIER ST.
True North

NOTE:
All reinforced concrete pipes are Class III

1"=80'-0" 80' 40' 0 80' 160'
SCALE IN FEET

2	8/17/89	REVISED DRAIN AT ILANIHAI ST.	G.Y.	7-14-89 D.E.
1	8/7/89	DELETE CURB RETURN - INSTALL STD. DRIVEWAY APRON.	G.Y.	7-14-89 D.E.
1	8/14/89	EXTENDED 30" DRAIN.	G.Y.	7-14-89 D.E.
REVISION	DATE	BRIEF	BY	APPROVED

M. Fukagawa 6/21/89
CHIEF, DIVISION OF ENGINEERING, D. P. W. — DATE

R. M. TOWILL CORPORATION
PLANNERS · ENGINEERS · SURVEYORS · PHOTOGRAMMETRISTS
CONSTRUCTION MANAGERS

GEORGE YOKOTA REGISTERED PROFESSIONAL ENGINEER No. 1156-C HAWAII, U.S.A.

THIS WORK WAS PREPARED BY ME OR UNDER MY SUPERVISION
Par En, Inc. dba Park Engineering

HAWAII COMMUNITY DEVELOPMENT AUTHORITY
STATE OF HAWAII

KAKA'AKO COMMUNITY DEVELOPMENT DISTRICT

I.D. 3

DRAINAGE MAP

ENGINEER: D.E. CHECKED BY: G.Y.
DRAFTSMAN: B.M. DATE:
APPROVED:
EXECUTIVE DIRECTOR, HAWAII COMMUNITY DEVELOPMENT AUTHORITY

AS BUILT SHEET 3 OF 117

FILE	POCKET	FOLDER	NO.

CONSTRUCTION NOTES

1. ALL APPLICABLE CONSTRUCTION WORK SHALL BE DONE IN ACCORDANCE WITH THE STANDARD SPECIFICATIONS FOR PUBLIC WORKS CONSTRUCTION, SEPT. 1986, STANDARD DETAILS FOR PUBLIC WORKS CONSTRUCTION, SEPTEMBER 1984 AND THE BOARD OF WATER SUPPLY'S WATER SYSTEMS STANDARDS DATED 1985 AND ALL SUBSEQUENT AMENDMENTS.

2. THE UNDERGROUND PIPES, CABLES OR DUCTLINES KNOWN TO EXIST BY THE ENGINEER FROM HIS SEARCH OF RECORDS ARE INDICATED ON THE PLANS. THE CONTRACTOR SHALL VERIFY THE LOCATION AND DEPTH OF THE FACILITIES AND EXERCISE PROPER CARE IN EXCAVATING IN THE AREA. WHEREVER CONNECTION OF NEW UTILITIES TO EXISTING UTILITIES ARE SHOWN ON THE PLANS, THE CONTRACTOR SHALL EXPOSE THE EXISTING LINES TO VERIFY THEIR LOCATIONS AND DEPTHS PRIOR TO EXCAVATION FOR THE NEW LINES.

3. THE CONTRACTOR SHALL REMOVE ALL SILT AND DEBRIS RESULTING FROM HIS WORK AND DEPOSITED IN DRAINAGE FACILITIES, ROADWAYS AND OTHER AREAS. THE COSTS INCURRED FOR ANY NECESSARY REMEDIAL ACTION BY THE ENGINEER SHALL BE PAYABLE BY THE CONTRACTOR.

4. THE CONTRACTOR, AT HIS EXPENSE, SHALL KEEP THE PROJECT AREA AND SURROUNDING AREA FREE FROM DUST NUISANCES. THE WORK SHALL BE IN CONFORMANCE WITH THE AIR POLLUTION CONTROL STANDARDS AND REGULATIONS OF THE STATE DEPARTMENT OF HEALTH.

5. ALL GRADING OPERATIONS SHALL BE PERFORMED IN CONFORMANCE WITH THE APPLICABLE PROVISIONS OF CHAPTER 54, WATER QUALITY STANDARDS, AND CHAPTER 55, WATER POLLUTION CONTROL OF TITLE 11, ADMINISTRATIVE RULES OF THE STATE DEPARTMENT OF HEALTH.

6. BENCH MARKS FOR THIS PROJECT ARE SHOWN ON THE PLANS.

7. BENCH MARKS SHALL BE ESTABLISHED ON NEW STREET MONUMENTS AND DATA SUBMITTED TO THE DIVISION OF ENGINEERING, DEPARTMENT OF PUBLIC WORKS, CITY AND COUNTY OF HONOLULU.

8. OTHER CONTRACTORS MAY BE WORKING IN THE IMMEDIATE VICINITY OF THIS PROJECT. THE CONTRACTOR SHALL COORDINATE HIS WORK WITH THESE CONTRACTORS IN A MANNER THAT WILL RESULT IN THE TIMELY AND ORDERLY EXECUTION OF THIS CONTRACT AND NOT UNREASONABLY INTERFERE OR HINDER THE OTHER CONTRACTORS.

9. ADJUSTMENTS WITHIN PRIVATE PROPERTY ARE SUBJECT TO PERMISSION OF AFFECTED OWNER AS VERIFIED BY THE ENGINEER REPRESENTING THE HAWAII COMMUNITY DEVELOPMENT AUTHORITY.

10. NO BLASTING SHALL BE PERMITTED ON THIS PROJECT.

11. THE CONTRACTOR SHALL NOTIFY THE DEPARTMENT OF PUBLIC WORKS DIVISION OF ENGINEERING CONSTRUCTION BRANCH SEVEN (7) DAYS PRIOR TO COMMENCEMENT OF CONSTRUCTION.

12. IF REMOVED, THE EXISTING ROCK CURB SHALL BE DELIVERED TO THE DIVISION OF ROAD MAINTENANCE CORPORATION YARD, 160 AHUI STREET. CONTACT LOWELL LUM, HONOLULU SUPERINTENDENT, AT 523-4287 AT LEAST 48 HOURS BEFORE DELIVERY.

13. ALL GRATES, FRAMES AND COVERS FOR STRUCTURES TO BE DEMOLISHED OR REMOVED SHALL BE SALVAGED AND DELIVERED TO THE DIVISION OF ROAD MAINTENANCE CORPORATION YARD 160 AHUI STREET. CONTACT LOWELL LUM, HONOLULU SUPERINTENDENT, AT 523-4287 AT LEAST 48 HOURS BEFORE DELIVERY.

14. ALL EXISTING STREET MONUMENTS SHALL BE PRESERVED AND TOPS ADJUSTED TO NEW GRADES OR EXISTING STREET MONUMENTS WHICH WILL BE DISTURBED OR DESTROYED BY THE NEW CONSTRUCTION, SHALL BE PROPERLY REFERENCED AND REPLACED AFTER CONSTRUCTION.

15. PRIOR TO CONSTRUCTION, CONTRACTOR SHALL RELOCATE B.M.'S SHOWN ON THE PLANS TO SAFE PLACES OUTSIDE OF THE CONSTRUCTION AREA.

16. FOR STRUCTURES TO BE ABANDONED IN PLACE, THE TOP 4' SHALL BE REMOVED AND THE BASE SHALL BE CRACKED.

17. DEMOLITION AND ADJUSTMENT TO BUILDINGS BY OTHERS SHALL BE DONE PRIOR TO OR CONCURRENT WITH THE PROJECT.

18 THE CONTRACTOR SHALL BE RESPONSIBLE TO COORDINATE THE WORK AT THE PROJECT LIMITS WITH THE OTHER CONTRACTORS.

CONSTRUCTION NOTES FOR GAS FACILITIES

1. THE GASCO, INC. GAS PIPELINES IN THE PROJECT AREA ARE PLASTIC COATED AND CATHODICALLY PROTECTED. THE CONTRACTOR SHALL BE EXTREMELY CAREFUL WHEN WORKING NEAR THESE GAS PIPELINES.

2. PRIOR WRITTEN CLEARANCE MUST BE OBTAINED FROM GASCO, INC., AT LEAST FIVE (5) WORKING DAYS BEFORE STARTING ANY EXCAVATION NEAR THESE GAS LINES.

   SINCE GAS LINE LOCATION ON FIELD MAPS ARE APPROXIMATE, THE CONTRACTOR, AFTER OBTAINING A WRITTEN CLEARANCE, SHALL CALL GASCO, INC., A MINIMUM OF 48 HOURS BEFORE STARTING EXCAVATION TO ARRANGE FOR FIELD LOCATION OF EXISTING GAS LINES. THE TELEPHONE NUMBER IS 547-3575 DURING BUSINESS HOURS, AND 526-0066 AFTER HOURS.

   THE CONTRACTOR SHALL EXCAVATE AND BACKFILL AROUND GAS PIPELINES IN THE PRESENCE OF A GASCO, INC. REPRESENTATIVE. ALL BACKFILL WITHIN SIX INCHES OF GAS PIPELINE SHALL BE SELECT CUSHION MATERIAL APPROVED BY GASCO, INC.

3. THE CONTRACTOR SHALL NOTIFY GASCO, INC. IMMEDIATELY AFTER ANY DAMAGE HAS BEEN CAUSED TO EXISTING GAS PIPELINES, THEIR COATINGS OR THEIR CATHODIC PROTECTION DEVICES. REPAIR WORK ON THIS DAMAGE SHALL BE DONE BY GASCO, INC. WITH PAYMENT FOR THIS WORK TO BE BORNE BY THE CONTRACTOR. THE CONTRACTOR SHALL BE LIABLE FOR ANY DAMAGE TO GASCO FACILITIES.

4. MINIMUM VERTICAL OR HORIZONTAL CLEARANCE BETWEEN GAS PIPELINES AND OTHER PIPELINES, CONDUITS, OR DUCTLINES SHALL BE 12 INCHES. ADEQUATE SUPPORT AND PROTECTION FOR GAS PIPELINES EXPOSED IN THE TRENCH SHALL BE PROVIDED. SUCH SUPPORT AND PROTECTION SHALL BE APPROVED BY GASCO, INC.

5. THE CONTRACTOR SHALL WORK IN AN EXPEDITIOUS MANNER IN ORDER TO KEEP UNCOVERED GAS PIPELINES EXPOSED FOR AS SHORT A PERIOD OF TIME AS POSSIBLE.

6. FOR RELOCATION OF ANY GAS PIPELINE, THE CONTRACTOR SHALL NOTIFY GASCO, INC. FIVE (5) WORKING DAYS BEFORE STARTING WORK. ANY RELOCATION OF GAS FACILITIES SHALL BE DONE BY GASCO, INC. AND AT GASCO, INC.'S EXPENSE.

10. AT THE PROJECT LIMITS, THE CONTRACTOR SHALL MATCH NEW IMPROVEMENTS CONSTRUCTED BY ADJOINING CONTRACTOR, OR PROVIDE TRANSITION TO EXISTING IMPROVEMENTS.

20. DRIVEWAYS SHALL BE 6" THICK REINFORCED CONCRETE.

PERTINENT RECOMMENDATIONS FROM SOILS REPORT PREPARED BY GEOLABS-HAWAII

FAIR TO POOR SOIL CONDITIONS WERE ENCOUNTERED BELOW THE SITE. RELATIVELY HIGH WATER LEVELS AND LOOSE SAND DEPOSITS WERE ENCOUNTERED THROUGHOUT THE AREA. THEREFORE, PROPER DEWATERING, TRENCH SHORING AND BRACING WILL BE NEEDED TO MINIMIZE LOSS OF GROUND AND RESULTING DAMAGE TO EXISTING FACILITIES/STRUCTURES.

TRENCH WALL SUPPORT
IT IS OUR OPINION THAT THE TRENCH WALLS IN THE LOOSE SAND DEPOSITS WILL REQUIRE SHEET PILING. IT IS IMPORTANT THAT ADEQUATE SHEETING WORK BE INSTALLED PRIOR TO THE EXCAVATION AND MAINTAINED TIGHT AGAINST THE TRENCH WALLS WITH PROPER BRACING TO MINIMIZE LATERAL MOVEMENTS OF THE ADJACENT GROUND INTO THE TRENCH EXCAVATION AND RESULTING SETTLEMENTS OF ADJACENT STRUCTURES. THIS IS PARTICULARLY CRITICAL SINCE MANY OF THE EXISTING STRUCTURES MAY BE SUPPORTED ON SPREAD FOOTINGS BEARING ON THE UPPER SANDY SOILS.

THE EXCAVATION SHALL BE PROVIDED WITH PROPER BRACING IN ACCORDANCE WITH THE ANTICIPATED LOADING CONDITIONS (TRAFFIC AND CONSTRUCTION MATERIALS STOCKPILE AND EQUIPMENT), AND TO SATISFY THE APPLICABLE SAFETY REQUIREMENTS. THE DESIGN AND SAFETY OF THE TRENCH SUPPORTS SHALL BE THE RESPONSIBILITY OF THE CONTRACTOR. THE APPARENT EARTH PRESSURE DIAGRAM MAY BE USED AS A GUIDE FOR CONSTRUCTION COST ESTIMATE PURPOSE AND FOR PRELIMINARY DESIGN OF THE TRENCH SUPPORT SYSTEM.

WHERE PRACTICABLE, THE TRENCH SHEETING SHALL EXTEND DOWN TO THE CORAL LAYER TO INCREASE THE STABILITY OF THE TRENCH BOTTOM AND TO MINIMIZE THE POSSIBILITY OF BOTTOM HEAVING OR "QUICK" CONDITIONS. WHERE THE CORAL IS TOO DEEP OR NOT PRESENT, THE SHEETING SHALL EXTEND DOWN A SUFFICIENT DEPTH TO MINIMIZE UP-LIFT SEEPAGE PRESSURES.

THE GROUND ADJACENT TO AND NEAR THE TOP OF THE EXCAVATION SHALL BE CONTINUOUSLY MONITORED FOR CRACKS OR DIPS AND OTHER INDICATIONS OF MOVEMENTS AND POSSIBLE SLOUGHING OF THE TRENCH WALLS. SUCH MONITORING IS PARTICULARLY CRITICAL IN AREAS WHERE EXISTING STRUCTURES AND UTILITIES ARE ADJACENT TO THE TRENCH EXCAVATION.

DEWATERING
THE PROJECT DEWATERING OPERATION SHALL BE DONE WITHOUT PUMPING OUT THE SOIL FINES (PUMPING CLEAR WATER ONLY), AND SHALL BE COORDINATED WITH THE EXCAVATION SHORING SUPPORT SO THAT THE STABILITY OF THE EXCAVATION IS NOT JEOPARDIZED. THE OPERATIONS SHALL BE CARRIED OUT WITHOUT CREATING A "QUICK" CONDITION OR SOFTENING THE BOTTOM OF THE EXCAVATION. BASED ON THE SOIL CLASSIFICATION AND LABORATORY TESTING, IT APPEARS THAT THE PERMEABILITY OF THE SAND SOILS MAY VARY FROM 10^{-4} TO 10^{-1} CM PER SECOND.

BACKFILL
IN GENERAL, THE TRENCH BACKFILL SHALL BE IN ACCORDANCE WITH THE STANDARD SPECIFICATIONS FOR PUBLIC WORKS CONSTRUCTION, SEPTEMBER 1986.

GRANULAR MATERIAL, SUCH AS SAND, SHALL BE USED FOR THE BACKFILL UP TO ABOUT ONE FOOT ABOVE THE PIPE TO REDUCE THE COMPACTIVE EFFORT REQUIRED AND POSSIBLE DAMAGE TO THE PIPE.

EXCEPT FOR THE ORGANIC CLAYS AND SILTS, MOST OF THE EXCAVATED ON-SITE SANDY AND GRAVELLY SOILS CAN BE RE-USED AS THE UPPER PORTION OF THE TRENCH BACKFILL FROM ABOVE ONE FOOT OVER THE PIPE WITHIN 2 FEET OF THE FINISHED GRADE. BACKFILL SHALL BE MECHANICALLY COMPACTED TO A MINIMUM OF 90% OF ITS MAXIMUM DRY DENSITY ESTABLISHED BY ASTM D-1557. BELOW ROADWAY AREAS, THE BACKFILL WITHIN 2 FEET OF THE FINISHED GRADE SHALL CONSIST OF SELECT BORROW AND BE COMPACTED TO 95% OF ITS MAXIMUM DRY DENSITY.

IF PRACTICABLE, THE TRENCHES SHALL BE KEPT FREE OF WATER DURING BACKFILLING. SHOULD BACKFILLING UNDER WATER BE NECESSARY, GRANULAR MATERIAL, SUCH AS BASE COURSE ROCK, SHALL BE UTILIZED TO MINIMIZE EXCESSIVE GROUND SETTLEMENT OF THE TRENCH BACKFILL IN THE FUTURE.

PIPE BEDDING
FOR PIPES BEARING ON CORAL AT THE INVERT LEVEL, A MINIMUM OF SIX INCHES OF COMPACTED GRANULAR BEDDING MATERIAL SHALL BE PLACED BELOW THE PIPE. THE GRANULAR BEDDING SHALL EXTEND BEYOND THE PIPE SIDES A MINIMUM WIDTH OF ONE-FOURTH THE OUTSIDE PIPE DIAMETER AND SHALL EXTEND HALF WAY UP THE PIPE SIDES. THE BEDDING MATERIAL SHALL CONSIST OF CLEAN GRANULAR MATERIAL, SUCH AS #3B FINE GRAVEL.

FOR PIPES ON THE LOOSE SANDS, AN ADDITIONAL ONE-FOOT LAYER OF GRANULAR MATERIAL, SUCH AS #3B FINE GRAVEL SHALL BE PROVIDED BELOW THE UTILITY PIPE AND BEDDING LAYER TO PROVIDE MORE UNIFORM SUPPORT FOR THE PIPE.

MANHOLE STRUCTURES
THE LATERAL EARTH PRESSURE ACTING ON THE UNDERGROUND STRUCTURES WILL DEPEND ON THE TYPE OF BACKFILL USED, THE EXTENT OF THE BACKFILL MATERIAL AND THE COMPACTIVE EFFORT REQUIRED ON THE MATERIAL BEHIND THE STRUCTURE WALLS. GRANULAR MATERIAL, SUCH AS THE SELECT ON-SITE SAND, SHALL BE USED FOR THE BACKFILL ADJACENT TO THE STRUCTURES TO REDUCE THE COMPACTIVE EFFORT REQUIRED AND TO MINIMIZE THE BUILD-UP OF ADDITIONAL LATERAL EARTH PRESSURES. WHERE CORAL FORMATION IS NOT ENCOUNTERED AT THE BOTTOM OF THE MANHOLE STRUCTURE, AN 18-INCH LAYER OF GRAVEL (#3B FINE) SHALL BE PLACED BELOW THE STRUCTURE.

ROADWAY PAVEMENTS
PRIOR TO THE ROAD RECONSTRUCTION, THE EXISTING ASPHALT AND CONCRETE PAVEMENTS SHALL BE REMOVED. ~~IT IS OUR OPINION THAT~~ THE EXISTING BASE COURSE WILL NOT BE SUITABLE FOR REUSE AS BASE COURSE IN THE NEW PAVEMENT. HOWEVER, IF IT IS CAREFULLY SEGREGATED DURING REMOVAL, IT MAY BE SUITABLE FOR REUSE AS SELECT BORROW UNDER PAVEMENTS AND IN THE TRENCH BACKFILL.

THE UNDERLYING SILTY SAND SUBGRADE SOIL SHALL BE SCARIFIED, FOR A DEPTH OF 6 INCHES, MOISTURE CONDITIONED TO ABOUT OPTIMUM MOISTURE CONTENT AND RECOMPACTED TO A MINIMUM OF 95% OF ITS MAXIMUM DRY DENSITY (ASTM D-1557-78). SOFT POCKETS DETECTED DURING THE ABOVE OPERATION SHALL BE REMOVED AND REPLACED WITH SELECT BORROW.

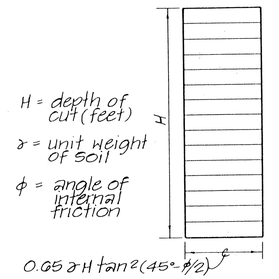

APPARENT PRESSURE DIAGRAM
(For calculating earth loads in struts of braced cuts)

CHIEF, PLANNING & ENGR., B.W.S. — DATE 12/6/89

CHIEF, DIV. OF ENGINEERING, D.P.W. — DATE 6/21/89

GEORGE YOKOTA REGISTERED PROFESSIONAL ENGINEER No. 1156-C HAWAII, U.S.A.

GEORGE YOKOTA REGISTERED PROFESSIONAL ENGINEER No. 1156-C HAWAII, U.S.A.

THIS WORK WAS PREPARED BY ME OR UNDER MY SUPERVISION

BY: George Yokota

Par En, Inc.
dba Park Engineering

REVISION	DATE	BRIEF	BY	APPROVED

R. M. TOWILL CORPORATION
PLANNERS · ENGINEERS · SURVEYORS · PHOTOGRAMMETRISTS
CONSTRUCTION MANAGERS

HAWAII COMMUNITY DEVELOPMENT AUTHORITY
STATE OF HAWAII
KAKA'AKO COMMUNITY DEVELOPMENT DISTRICT
I.D. 3

NOTES

ENGINEER: G.Y. CHECKED BY: G.Y.
DRAFTSMAN: A.M. DATE:
APPROVED:
EXECUTIVE DIRECTOR, HAWAII COMMUNITY DEVELOPMENT AUTHORITY

FILE	POCKET	FOLDER	NO.

AS BUILT SHEET 4 OF 117

SEWER NOTES

1. ALL SEWER CONSTRUCTION SHALL BE DONE IN ACCORDANCE WITH THE STANDARD SPECIFICATIONS FOR PUBLIC WORKS CONSTRUCTION, SEPT. 1986, AND THE STANDARD DETAILS FOR PUBLIC WORKS CONSTRUCTION, SEPT. 1984 AS AMENDED, OF THE DEPARTMENT OF PUBLIC WORKS, CITY AND COUNTY OF HONOLULU.

2. THE CONTRACTOR SHALL NOTIFY THE DIVISION OF WASTEWATER MANAGEMENT, CITY AND COUNTY OF HONOLULU, SEVEN (7) DAYS PRIOR TO COMMENCEMENT OF WORK, AND SUBMIT FOUR (4) SETS OF APPROVED CONSTRUCTION DRAWINGS.

3. THE EXISTING UTILITIES HAVE BEEN SHOWN ON THESE PLANS INSOFAR AS IT IS POSSIBLE TO DO SO. THEIR LOCATIONS AS SHOWN ARE APPROXIMATE ONLY AND THE CONTRACTOR SHALL MAKE AN INDEPENDENT CHECK ON THE GROUND AND WITH THE VARIOUS UTILITY COMPANIES AND GOVERNMENTAL AGENCIES TO ASCERTAIN THEIR EXACT LOCATIONS.

4. IN THE EVENT THAT ANY CHANGES IN ALIGNMENT OR GRADES FOR THE PROPOSED SEWERS ARE REQUIRED DUE TO UNFORESEEN CONFLICT WITH UTILITIES, THE PROJECT ENGINEER SHALL COORDINATE THE WORK NECESSARY FOR THE CHANGES.

5. CRUSHED ROCK CRADLE IS PERMITTED, UNLESS OTHERWISE INDICATED, IN AREAS OF UNSTABLE SOIL, THE CONSTRUCTION ENGINEER WILL DETERMINE THE PIPE SUPPORT REQUIRED.

6. ALL NEW LATERALS SHALL BE 6" IN DIAMETER, UNLESS OTHERWISE NOTED, AND SHALL EITHER END WITH A 6" PLUG AND A MARKER OR CONNECTED TO AN EXISTING SEWER LINE AT THE NEW PROPERTY LINE WITH A NEW CLEANOUT.

7. TOPS OF ALL EXISTING SMH SHALL BE ADJUSTED TO NEW GRADES.

8. ALL ABANDONED SEWER MANHOLES SHALL BE DEMOLISHED BY REMOVING THE TOP CONE SECTION OF MANHOLE AND THEREAFTER FILLING MANHOLE WITH APPROVED BACKFILL MATERIAL. ALL PIPES WITHIN ABANDONED MANHOLES SHALL BE PLUGGED WITH BRICK AND CEMENT MORTAR. MANHOLE FRAMES AND COVERS SHALL BE REUSED IF THEY CONFORM TO THE STANDARDS OF THE DEPARTMENT OF PUBLIC WORKS. ALL NON-CONFORMING MANHOLE FRAMES AND COVERS FROM DEMOLISHED MANHOLES SHALL BE TAKEN TO THE DIVISION OF WASTEWATER MANAGEMENT (CITY AND COUNTY OF HONOLULU) MAINTENANCE YARD AT KOULA STREET.

9. PLUG ALL OPENINGS IN THE EXISTING SEWER LINES TO BE ABANDONED WITH BRICK AND CEMENT MORTAR.

10. WHERE A NEW MANHOLE IS CONSTRUCTED OVER AN EXISTING SEWER LINE, THE CONTRACTOR SHALL CUT EXISTING PIPE WITHIN THE NEW MANHOLE.

11. WHERE THE CONTRACTOR IS REQUIRED TO BREAK INTO AN EXISTING MANHOLE, HE SHALL CONSTRUCT THE CHANNELIZING WITHIN THE EXISTING MANHOLE.

12. THE CONTRACTOR SHALL BE RESPONSIBLE FOR LOCATING ALL EXISTING HOUSE SEWER LINES AT THE NEW PROPERTY LINE AND CONNECT TO THE NEW LATERALS. LOCATING OF EXISTING SEWER LATERALS SHALL BE CONSIDERED INCIDENTAL TO LATERAL CONNECTIONS.

13. THE CONTRACTOR SHALL PROVIDE FOR ALL NECESSARY BY-PASSES, PUMPS, ETC., TO INSURE A CONTINUOUS UNINTERRUPTED FLOW OF SEWAGE AT ALL TIMES. THIS WORK SHALL BE CONSIDERED INCIDENTAL TO PIPE INSTALLATION.

14. SLOPES FOR ALL NEW SEWER LATERALS SHALL BE 1%, UNLESS OTHERWISE NOTED ON THE PLANS.

15. THE CONSULTING ENGINEER SHALL PROVIDE MYLAR "AS BUILT" TO THE DIVISION OF WASTEWATER MANAGEMENT.

16. ADJUST ALL EXISTING SEWER MANHOLE FRAME AND COVER TO NEW GRADE.

HECO NOTES

1. THE CONTRACTOR SHALL EXERCISE EXTREME CAUTION WHEN THE EXCAVATION AND CONSTRUCTION CROSSES OR IS IN CLOSE PROXIMITY OF UNDERGROUND ELECTRICAL FACILITIES AND SHALL MAINTAIN CLEARANCE FOR HIS EQUIPMENT WHILE WORKING CLOSE TO AND/OR UNDER OVERHEAD FACILITIES. ANY DAMAGE TO THE EXISTING UNDERGROUND UTILITIES SHALL BE REPAIRED AND PAID FOR BY THE CONTRACTOR.

2. CONTACT MR. DAVID MONCRIEF, HECO UNDERGROUND SUPERINTENDENT, AT 548-3544 A MINIMUM OF 72 HOURS IN ADVANCE FOR VERIFYING THE LOCATION OF UNDERGROUND DUCTLINES AND FOR ASSISTANCE IN PROVIDING PROPER SUPPORT AND PROTECTION OF UNDERGROUND DUCTLINES, FOR POLE BRACING INSTRUCTIONS, SHOULD FIELD CONDITIONS AND/OR CONSTRUCTION PROCEDURES REQUIRE THAT POLES BE BRACED TO FACILITATE CONSTRUCTION, CONTACT MR. STANLEY IMAMURA, HECO DISTRICT CONSTRUCTION SUPERINTENDENT, AT 548-3562 A MINIMUM OF 72 HOURS IN ADVANCE.

3. WHEN TRENCH EXCAVATION IS ADJACENT TO OR UNDER EXISTING STRUCTURES OR FACILITIES, THE CONTRACTOR SHALL BE RESPONSIBLE FOR PROPERLY SHEETING AND BRACING THE EXCAVATION AND STABILIZING THE EXISTING GROUND TO RENDER IT SAFE AND SECURE FROM POSSIBLE SLIDES, CAVE-INS AND SETTLEMENT, AND FOR PROPERLY SUPPORTING EXISTING STRUCTURES AND FACILITIES WITH BEAMS, STRUTS OR UNDERPINNING TO FULLY PROTECT IT FROM DAMAGE.

4. THE CONTRACTOR SHALL BE LIABLE FOR ANY DAMAGES TO HECO'S FACILITIES.

HTCO NOTES

1. THE CONTRACTOR SHALL EXERCISE EXTREME CAUTION WHEN THE EXCAVATION AND CONSTRUCTION CROSSES OR IS IN CLOSE PROXIMITY OF UNDERGROUND TELEPHONE AND SIGNAL CABLE FACILITIES AND MAINTAIN ADEQUATE CLEARANCE FOR HIS EQUIPMENT WHILE WORKING CLOSE TO AND/OR UNDER THE OVERHEAD FACILITIES. ANY DAMAGE TO THE EXISTING UNDERGROUND FACILITIES SHALL BE REPAIRED AND PAID FOR BY THE CONTRACTOR.

2. FOR FIELD LOCATION OF HTCO. FACILITIES, CONTACT HTCO., OUTSIDE PLANT ENGINEERING SECTION, A MINIMUM OF 72 HOURS IN ADVANCE PRIOR TO START OF EXCAVATION.

3. SHOULD FIELD CONDITIONS AND CONSTRUCTION PROCEDURES REQUIRE THAT UTILITY POLES BE BRACED, THE CONTRACTOR SHALL CONTACT THE FOLLOWING PERSON FOR POLE BRACING INSTRUCTIONS A MINIMUM OF 72 HOURS IN ADVANCE OF ACTUAL REQUIRED BRACING:

   H.T.CO. - CALVIN CHOY - AREA CONSTRUCTION SUPERVISOR AT 546-3381.

WATER NOTES

1. UNLESS OTHERWISE SPECIFIED, ALL MATERIALS AND CONSTRUCTION OF WATER SYSTEM FACILITIES AND APPURTENANCES SHALL BE IN ACCORDANCE WITH THE CITY AND COUNTY HONOLULU BOARD OF WATER SUPPLY'S "WATER SYSTEM STANDARDS", VOLUME 1, DATED 1985 AND THE "APPROVED MATERIAL LIST AND STANDARD DETAILS FOR WATER SYSTEM CONSTRUCTION", VOLUME 2, DATED 1985, AND ALL SUBSEQUENT AMENDMENTS AND ADDITIONS.

2. ALL PLANS APPROVED BY THE BOARD OF WATER SUPPLY ARE BASED SOLELY ON THE ADEQUACY OF THE WATER SUPPLY. ALL OTHER FEATURES OF THE WATER SYSTEM, SUCH AS LINES, GRADES, FITTINGS, ETC., AND DRAINAGE AND OTHER FEATURES OF THE IMPROVEMENTS SHALL NOT BE THE RESPONSIBILITY OF THE BOARD OF WATER SUPPLY.

3. TEST PRESSURE SHALL BE 150 PSI.

4. THE CONTRACTOR SHALL NOTIFY THE BOARD OF WATER SUPPLY IN WRITING ONE WEEK PRIOR TO COMMENCING WORK ON WATER SYSTEM.

5. AFTER INSTALLATION OF TAPPING SLEEVE AND VALVE PRIOR TO ACTUAL TAPPING OPERATIONS, THE ASSEMBLY SHALL BE TESTED AT 150 PSI ON BOTH SIDES OF THE VALVE.

6. THE CONTRACTOR SHALL BE RESPONSIBLE FOR THE PROTECTION OF ALL WATER LINES DURING CONSTRUCTION. THE CONTRACTOR SHALL BE ESPECIALLY CAREFUL WHEN EXCAVATING BEHIND WATER LINE TEES AND BENDS WHEREVER THERE IS A POSSIBILITY OF WATER LINE MOVEMENT DUE TO REMOVAL OF THE SUPPORTING EARTH BEYOND THE EXISTING REACTION BLOCKS. THE CONTRACTOR SHALL TAKE WHATEVER MEASURE NECESSARY TO PROTECT THE WATER LINES, SUCH AS CONSTRUCTING SPECIAL REACTION BLOCKS (WITH BWS APPROVAL) AND/OR MODIFYING HIS CONSTRUCTION METHODS.

7. THE EXISTENCE AND LOCATION OF UNDERGROUND UTILITIES AND STRUCTURES AS SHOWN ON THE PLANS ARE FROM THE LATEST AVAILABLE DATA BUT IS NOT GUARANTEED AS TO THE ACCURACY OR THE ENCOUNTERING OF OTHER OBSTACLES DURING THE COURSE OF THE WORK. THE CONTRACTOR SHALL BE RESPONSIBLE AND SHALL PAY FOR ALL DAMAGES TO EXISTING UTILITIES.

8. PRIOR TO INSTALLATION, THE CONTRACTOR SHALL SUBMIT FOR APPROVAL BY BOARD OF WATER SUPPLY, THE MANUFACTURER'S CERTIFICATION THAT ALL CAST IRON (GRAY OR DUCTILE) FITTINGS FOR THE PROJECT CONFORM IN ALL RESPECTS TO THE WATER SYSTEM STANDARDS, DATED 1985.

9. ALL WATER LINE CONNECTIONS REQUIRING SHUTDOWN OF WATER MAINS SHALL BE SCHEDULED FOR AFTER NORMAL WORKING HOURS AND MAXIMUM SHUTDOWN TIME SHALL BE 6 HOURS

10. GEO-LABS SOIL REPORT RECOMMENDATIONS SHALL BE TAKEN INTO ACCOUNT WITH REGARDS TO PIPE BEDDING AND MANHOLE STRUCTURES.

11. CONTRACTOR SHALL CUT AND PLUG ALL EXISTING UNUSED LATERALS AT THE MAIN WHETHER OR NOT SHOWN ON THE PLANS. METER AND VALVE BOXES TO BE OR ALREADY ABANDONED SHALL BE DEMOLISHED OR REMOVED AND PROPERLY DISPOSED OF THE DAMAGED AREA SHALL BE REPAIRED TO AN EQUAL OR BETTER CONDITION THAN THE IMMEDIATE AREA. ALL WORK SHALL BE DONE AT THE EXPANSE OF THE CONTRACTOR.

12. POLYGON SHAPE FOR MECHANICAL JOINT GLANDS AS DESCRIBED IN AWWA STANDARD C111 SHALL BE "STRAIGHT-SIDED" AND SHALL BE APPLICABLE TO BOTH CAST IRON AND DUCTILE IRON GLAND.

13. REAPPROVAL SHALL BE REQUIRED IF THIS PROJECT IS NOT UNDER CONSTRUCTION WITHIN A PERIOD OF TWO YEARS.

ADDITIONAL WATER NOTES

1. AT THE ELECTRICAL/SIGNAL DUCTLINE WATER CROSSINGS, ADJUST ALL ELECTRICAL/SIGNAL DUCTLINE ELEVATION TO MAINTAIN 6" VERTICAL CLEAR SEPARATION FROM ALL WATER LINES (12" CLEAR FOR ALL ELECTRICAL/SIGNAL DUCTLINE STRUCTURES LARGER THAN 18") AT NO COST TO THE BWS.

2. MAINTAIN 3'-0" MIN. HORIZONTAL CLEAR SEPARATION BETWEEN ALL WATER SYSTEMS AND NEAREST ELECTRICAL/SIGNAL DUCTLINES PARALLELING THE WATER SYSTEM AT NO COST TO THE BWS.

3. MAINTAIN 3'-0" MIN. HORIZONTAL CLEAR SEPARATION BETWEEN STREET LIGHT/TRAFFIC SIGNAL, STANDARDS (INCLUDING ANY MODULAR UNITS) AND THE NEAREST WATER SYSTEM. CONTRACTOR SHALL FIELD VERIFY FOR ANY CONFLICTS AT EACH STREET LIGHT/TRAFFIC SIGNAL STANDARDS LOCATION. WHERE CONFLICTS OCCURS, THE CONTRACTOR SHALL COORDINATE WITH THE PROJECT ENGINEER TO REVISE THE STREET LIGHT/TRAFFIC SIGNAL STANDARD TO PROVIDE THE REQUIRED CLEARANCES AT NO COST TO THE BWS.

4. THE EXISTENCE OF ALL EXISTING SERVICE LATERALS AND CONNECTION, AS SHOWN ON PLANS, ARE BASED ON THE LATEST AVAILABLE INFORMATION BUT ARE NOT GUARANTEED AS TO THE ACCURACY OR THE ENCOUNTERING OF OTHER SERVICES DURING THE COURSE OF THE WORK.
   THE CONTRACTOR SHALL VERIFY ITS LOCATION, WHETHER OR NOT SHOWN ON THE PLANS, PRIOR TO COMMENCING WITH ANY OF THE WORK AND SHALL NOT ASSUME THAT, WHERE NO SERVICES ARE SHOWN NONE EXISTS.

for CHIEF, PLANNING & ENGR., B.W.S. — DATE 12/6/89

CHIEF, DIV. OF WASTEWATER MGMT. — DATE 5/8/90

GEORGE YOKOTA REGISTERED PROFESSIONAL ENGINEER No. 1156-C HAWAII, U.S.A.

REVISION	DATE	BRIEF	BY	APPROVED

R. M. TOWILL CORPORATION
PLANNERS · ENGINEERS · SURVEYORS · PHOTOGRAMMETRISTS
CONSTRUCTION MANAGERS

GEORGE YOKOTA REGISTERED PROFESSIONAL ENGINEER No. 1156-C HAWAII, U.S.A.

THIS WORK WAS PREPARED BY ME OR UNDER MY SUPERVISION

Par En, Inc.
dba Park Engineering

HAWAII COMMUNITY DEVELOPMENT AUTHORITY
STATE OF HAWAII
KAKA'AKO COMMUNITY DEVELOPMENT DISTRICT
I.D. 3

NOTES

ENGINEER: G.Y. CHECKED BY: G.Y.
DRAFTSMAN: A.M. DATE:
APPROVED:
EXECUTIVE DIRECTOR, HAWAII COMMUNITY DEVELOPMENT AUTHORITY

FILE	POCKET	FOLDER	NO.

AS BUILT

TRAFFIC NOTES

1. A PERMIT SHALL BE OBTAINED FROM THE DEPARTMENT OF TRANSPORTATION SERVICES BEFORE WORK ON ANY PORTION OF A PUBLIC STREET OR HIGHWAY MAY BEGIN.

2. THE CONTRACTOR SHALL PROVIDE, INSTALL AND MAINTAIN ALL NECESSARY SIGNS AND OTHER PROTECTIVE FACILITIES, WHICH SHALL CONFORM WITH THE "HAWAII ADMINISTRATION RULES GOVERNING THE USE OF TRAFFIC CONTROL DEVICES AT WORK SITES ON OR ADJACENT TO PUBLIC STREETS AND HIGHWAYS" ADOPTED BY THE DIRECTOR OF TRANSPORTATION, AND THE CURRENT U.S. FEDERAL HIGHWAY ADMINISTRATION'S "MANUAL ON UNIFORM TRAFFIC CONTROL DEVICES FOR STREET AND HIGHWAYS, PART VI - TRAFFIC CONTROLS FOR STREET AND HIGHWAY CONSTRUCTION AND MAINTENANCE OPERATIONS."

3. AS REQUIRED BY THE DEPARTMENT OF TRANSPORTATION SERVICES THE CONTRACTOR SHALL HIRE SPECIAL DUTY POLICE OFFICERS TO CONTROL THE FLOW OF TRAFFIC.

4. WHERE PEDESTRIAN WALKWAYS EXIST, THEY SHALL BE MAINTAINED IN PASSABLE CONDITION OR OTHER FACILITIES FOR PEDESTRIANS SHALL BE PROVIDED. PASSAGE BETWEEN WALKWAYS AT INTERSECTIONS SHALL LIKEWISE BE PROVIDED.

5. THE CONTRACTOR SHALL REFERENCE, TO THE SATISFACTION OF THE DEPARTMENT OF TRANSPORTATION SERVICES, ALL EXISTING TRAFFIC SIGNS, POSTS AND PAVEMENT MARKERS PRIOR TO THE COMMENCEMENT OF CONSTRUCTION. THE CONTRACTOR SHALL REPLACE OR REPAIR ALL TRAFFIC SIGNS, POSTS AND PAVEMENT MARKERS DISTURBED BY HIS ACTIVITIES, UNLESS DIRECTED OTHERWISE BY THE DEPARTMENT OF TRANSPORTATION SERVICES.

6. DURING NON-WORKING HOURS ALL LANES (FOR KAPIOLANI BLVD AND KING ST, AND A MINIMUM OF TWO LANES FOR ALL OTHER STREETS) SHALL BE OPEN AND ALL EXCAVATIONS ON THE ROAD SHALL BE COVERED WITH A SAFE NON-SKID BRIDGING MATERIAL. DRIVEWAYS SHALL BE KEPT OPEN UNLESS THE OWNERS OF THE PROPERTY USING THESE RIGHTS-OF-WAY ARE OTHERWISE PROVIDED FOR SATISFACTORILY. A ROADWAY MAY BE CLOSED ONLY WITH THE EXPRESS PERMISSION OF THE DEPARTMENT OF TRANSPORTATION SERVICES. ALL TRENCHES SHALL BE COVERED DURING NON-WORKING HOURS.

7. EXISTING STREET LIGHTING, FIRE ALARM AND TRAFFIC SIGNAL FACILITIES SHALL BE MAINTAINED IN OPERATING CONDITION THROUGHOUT THE CONSTRUCTION PROJECT. ANY RELOCATION REQUIRED SHALL BE APPROVED BY THE ELECTRICAL AND MAINTENANCE DIVISION, DEPARTMENT OF TRANSPORTATION SERVICES AND PAID FOR BY THE CONTRACTOR.

8. CONTRACTOR SHALL NOTIFY THE DEPARTMENT OF TRANSPORTATION SERVICES, TRAFFIC SIGNALS SECTION, AT 523-4961 ONE WEEK PRIOR TO ANY EXCAVATION.

9. THE CONTRACTOR SHALL NOTIFY MTL. JOHN CHONG OR KENNETH HONG AT 531-7066, TWO WEEKS PRIOR TO CONSTRUCTION, INFORMING THEM OF LOCATION, SCOPE OF WORK, PROPOSED CLOSURE OF ANY STREET OR TRAFFIC LANES, AND THE NEED TO RELOCATE ANY BUS STOP.

10. NO MATERIAL AND/OR EQUIPMENT SHALL BE STOCKPILED OR OTHERWISE STORED WITHIN STREET RIGHTS-OF-WAY EXCEPT AT LOCATIONS DESIGNATED IN WRITING AND APPROVED BY THE DEPARTMENT OF TRANSPORTATION SERVICES.

11. WORK ON ANY CITY STREET AREA MAY BE PERFORMED BETWEEN THE HOURS OF 8:30 A.M. TO 3:30 P.M. MONDAY TO FRIDAY, UNLESS OTHERWISE PERMITTED BY THE DEPARTMENT OF TRANSPORTATION SERVICES.

12. THE CONTRACTOR SHALL CONTACT THE DEPARTMENT OF TRANSPORTATION SERVICES, PARKING SECTION AT 523-4313 AT LEAST 48 HOURS PRIOR TO ANY PARKING METER WORK.

TRAFFIC SIGNS AND PAVEMENT MARKINGS

1. ALL TRAFFIC SIGNS AND PAVEMENT MARKINGS SHALL CONFORM TO THE LATEST EDITION OF THE "MANUAL ON UNIFORM TRAFFIC CONTROL DEVICES FOR STREETS AND HIGHWAYS," AS AMENDED, AND APPLICABLE SECTIONS OF PART V OF THE "STANDARD DETAILS FOR PUBLIC WORKS CONSTRUCTION," DATED AUGUST 1976, UNLESS OTHERWISE SPECIFIED ON THE PLANS AND SPECIFICATIONS.

2. THE CONTRACTOR SHALL INFORM THE ENGINEER AT LEAST SIX (6) WORKING DAYS PRIOR TO ANY WORK ON PAVEMENT MARKING OPERATIONS TO SCHEDULE A REVIEW AND APPROVAL OF THE STRIPING PLAN.

3. THE APPROVED STRIPING PLAN SHALL BE LAID OUT USING THINNED OUT PAINT OR OTHER APPROVED DEVICE. FIELD ADJUSTMENTS SHALL BE MADE AS DIRECTED BY THE ENGINEER BEFORE THE FINAL MARKINGS ARE APPLIED.

4. ALL PAVEMENT MARKINGS THAT BECOME INAPPLICABLE SHALL BE REMOVED BY THE CONTRACTOR AT HIS OWN EXPENSE. REMOVAL SHALL BE BY "SAND-BLASTING" OR BY OTHER METHODS APPROVED BY THE ENGINEER BEFORE THE NEW PAVEMENT MARKINGS ARE APPLIED.

5. THE CONTRACTOR SHALL SUBMIT TO THE ENGINEER A LIST OF THE TRAFFIC PAINTS HE DESIRES TO USE, INCLUDING MANUFACTURERS NAME AND FORMULA NUMBER, AND THE DATE OF PURCHASE FOR APPROVAL PRIOR TO STRIPING OPERATIONS.

6. STREET SIGNS SHALL BE INSTALLED IN ACCORDANCE WITH THE STANDARDS OF THE DEPARTMENT OF TRANSPORTATION SERVICES. THE EXACT LOCATION SHALL BE DETERMINED BY THE ENGINEER. IN LIEU OF THE STANDARD EMBOSSED SIGNS, REFLECTORIZED STREET NAME SIGNS WITH SIGN BRACKETS MAY BE USED.

7. THE DEPARTMENT OF TRANSPORTATION SERVICES SHALL BE CONTACTED AT 523-4029 ONE WEEK PRIOR TO ANY SIGNING OR STRIPING WORK.

8. FOR TEMPORARY STRIPING, THE CONTRACTOR MAY USE OTHER MATERIALS, SUCH AS ADHESIVE STRIPING, WITH THE APPROVAL OF THE ENGINEER.

ELECTRICAL AND MAINTENANCE SERVICES DIVISION NOTES

1. THE CONTRACTOR SHALL NOTIFY THE JOINT POLE COMMITTEE TWO (2) WEEKS IN ADVANCE OF ANY RELOCATION OF UTILITY POLE THAT MAY BE NECESSARY.

2. THE CONTRACTOR SHALL NOTIFY THE ELECTRICAL AND MAINTENANCE SERVICES DIVISION, DEPARTMENT OF TRANSPORTATION SERVICES, THREE (3) WORKING DAYS PRIOR TO COMMENCING WORK ON THE STREET LIGHTING SYSTEM (PHONE: 523-4905).

3. STREET LIGHTING SHALL BE KEPT OPERATIONAL DURING CONSTRUCTION. ANY RELOCATION REQUIRED SHALL BE APPROVED BY THE ELECTRICAL AND MAINTENANCE SERVICES DIVISION, DEPARTMENT OF TRANSPORTATION SERVICES AND PAID FOR BY THE CONTRACTOR.

4. THE CONTRACTOR SHALL BE RESPONSIBLE FOR ANY DAMAGES TO EXISTING STREET LIGHTING FACILITIES AND DAMAGES SHALL BE REPAIRED BY THE CONTRACTOR AT NO COST TO CITY.

GRADING NOTES

1. ALL GRADING WORK SHALL BE DONE IN ACCORDANCE WITH CHAPTER 23, GRADING, SOIL EROSION AND SEDIMENT CONTROL, OF THE REVISED ORDINANCES OF HONOLULU, 1978, AS AMENDED (ORDINANCE NO. 81-13) AND SOIL REPORT BY GEOLABS-HAWAII DATED FEBRUARY 3, 1984.

2. THE CONTRACTOR SHALL REMOVE ALL SILT AND DEBRIS RESULTING FROM HIS WORK AND DEPOSITED IN DRAINAGE FACILITIES, ROADWAYS AND OTHER AREAS. THE COSTS INCURRED FOR ANY NECESSARY REMEDIAL ACTION BY THE CHIEF ENGINEER SHALL BE PAYABLE BY THE CONTRACTOR.

3. THE CONTRACTOR, AT HIS OWN EXPENSE, SHALL KEEP THE PROJECT AREA AND SURROUNDING AREA FREE FROM DUST NUISANCE. THE WORK SHALL BE IN CONFORMANCE WITH THE AIR POLLUTION CONTROL STANDARDS AND REGULATIONS OF THE STATE DEPARTMENT OF HEALTH.

4. THE UNDERGROUND PIPES, CABLES OR DUCTLINES KNOWN TO EXIST BY THE ENGINEER FROM HIS SEARCH OF RECORDS ARE INDICATED ON THE PLANS. THE CONTRACTOR SHALL VERIFY THE LOCATION AND DEPTH OF THE FACILITIES AND EXERCISE PROPER CARE IN EXCAVATING IN THE AREA. WHEREVER CONNECTIONS OF NEW UTILITIES TO EXISTING UTILITIES ARE SHOWN ON THE PLANS, THE CONTRACTOR SHALL EXPOSE THE EXISTING LINES AT THE PROPOSED CONNECTIONS TO VERIFY THEIR LOCATIONS AND DEPTHS PRIOR TO EXCAVATION FOR THE NEW LINES.

5. ALL SLOPES AND EXPOSED AREAS SHALL BE SODDED OR PLANTED AS SOON AS FINAL GRADES HAVE BEEN ESTABLISHED. PLANTING SHALL NOT BE DELAYED UNTIL ALL GRADING WORK HAS BEEN COMPLETED. GRADING TO FINAL GRADE SHALL BE CONTINUOUS, AND ANY AREA, WITHIN WHICH WORK HAS BEEN INTERRUPTED OR DELAYED, SHALL BE PLANTED.

6. FILLS ON SLOPES STEEPER THAN 5:1 SHALL BE KEYED.

7. THE CITY SHALL BE INFORMED OF THE LOCATION OF THE BORROW/DISPOSAL SITE FOR THE PROJECT WHEN THE APPLICATION FOR A GRADING PERMIT IS MADE. THE BORROW/DISPOSAL SITE MUST ALSO FULFILL THE REQUIREMENTS OF THE GRADING ORDINANCE.

8. NO GRADING WORK SHALL BE DONE ON SATURDAYS, SUNDAYS AND HOLIDAYS AT ANY TIME WITHOUT PRIOR NOTICE TO THE CHIEF ENGINEER.

9. THE LIMITS OF THE AREA TO BE GRADED SHALL BE FLAGGED BEFORE THE COMMENCEMENT OF THE GRADING WORK.

10. TEMPORARY EROSION CONTROLS SHALL NOT BE REMOVED BEFORE PERMANENT EROSION CONTROLS ARE IN-PLACE AND ESTABLISHED.

11. ALL GRADING OPERATIONS SHALL BE PERFORMED IN CONFORMANCE WITH THE APPLICABLE PROVISIONS OF CHAPTER 54, WATER QUALITY STANDARDS, AND CHAPTER 55, WATER POLLUTION CONTROL, OF TITLE 11, ADMINISTRATIVE RULES OF THE STATE DEPARTMENT OF HEALTH.

12. BUILDING PERMIT(S) FOR RETAINING WALL(S) SHALL BE OBTAINED PRIOR TO APPLICATION FOR A GRADING PERMIT.

TEMPORARY EROSION CONTROL PROCEDURES

1. THE CONTRACTOR SHALL MINIMIZE THE AMOUNT OF LAND TO BE EXPOSED AT ANY ONE TIME.

2. GRASSING (COMMON BERMUDA GRASS OR STAR GRASS CUTTINGS AT THE RATE OF 50 BUSHELS PER ACRE OR AN AVERAGE OF 2 SPRIGS PER SQUARE FOOT) OF ALL AREAS GRADED SHALL BE DONE AS FINAL GRADES ARE ESTABLISHED.

3. GRADED AREAS THAT ARE NOT AT FINAL GRADE AND IS EXPECTED TO BE EXPOSED FOR MORE THAN 30 DAYS, SHALL BE MULCHED (AT THE RATE OF 45 CUBIC FEET PER 1,000 SQUARE FEET) IN ORDER TO PREVENT EROSION AND SILT RUNOFF.

4. WHEN INSTALLING THE DRAINAGE SYSTEM FOR THE PROJECT FILTERING MATERIAL (JUTE STRIPS OR EQUAL) AT THE INLETS TO THE SYSTEM SHALL BE PROVIDED TO PREVENT SILT FROM ENTERING THE SYSTEM.

5. THE ABOVE PROCEDURE FOR EROSION AND SEDIMENT CONTROL MAY BE REVISED BY THE CONTRACTOR TO CONFORM TO HIS GRADING OPERATION PROCEDURE. BUT ANY REVISION TO THE ABOVE SHALL BE SUBMITTED TO THE DEPARTMENT OF PUBLIC WORKS, CHIEF ENGINEER FOR APPROVAL, BY THE CONTRACTOR.

6. FOLLOW SEQUENCE OF OPERATION AS RECOMMENDED ON PAGE 8 OF THE "SOIL EROSION STANDARDS AND GUIDELINES."

APPROVED: DATE: 6/21/89

M. Fukagawa
CHIEF, DIV. OF ENGINEERING, D.P.W.

CHIEF, DIV OF TRAFFIC ENGR., D.O.T.S.

GEORGE YOKOTA REGISTERED PROFESSIONAL ENGINEER No. 1156-C HAWAII, U.S.A.

REGISTERED PROFESSIONAL ENGINEER

THIS WORK WAS PREPARED BY ME OR UNDER MY SUPERVISION

By: Denys Yokota

Par En, Inc.
dba Park Engineering

REVISION	DATE	BRIEF	BY	APPROVED

R. M. TOWILL CORPORATION
PLANNERS · ENGINEERS · SURVEYORS · PHOTOGRAMMETRISTS
CONSTRUCTION MANAGERS

HAWAII COMMUNITY DEVELOPMENT AUTHORITY
STATE OF HAWAII

KAKA'AKO COMMUNITY DEVELOPMENT DISTRICT

I. D. 3

NOTES

ENGINEER: GY CHECKED BY: GY
DRAFTSMAN: AM DATE:
APPROVED:
EXECUTIVE DIRECTOR, HAWAII COMMUNITY DEVELOPMENT AUTHORITY

FILE	POCKET	FOLDER	NO.

AS BUILT SHEET 6 OF 117

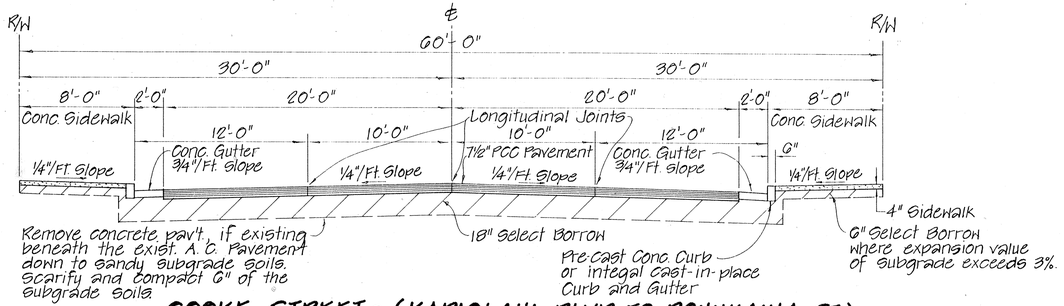

COOKE STREET ~ (KAPIOLANI BLVD. TO POHUKAINA ST.)
60-FT. ROADWAY

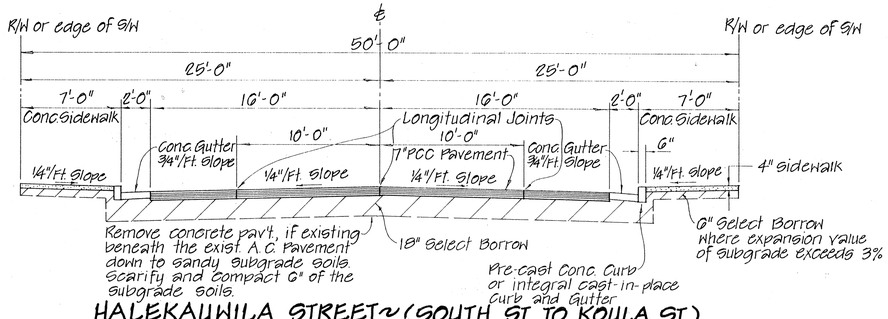

HALEKAUWILA STREET ~ (SOUTH ST. TO KOULA ST.)
50-FT. ROADWAY

Scale: 1" = 5'

ALTERNATE REINF. CONC. PAVEMENT

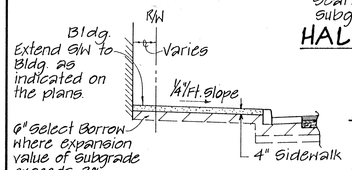

EXTENDED S/W TO BLDGS.

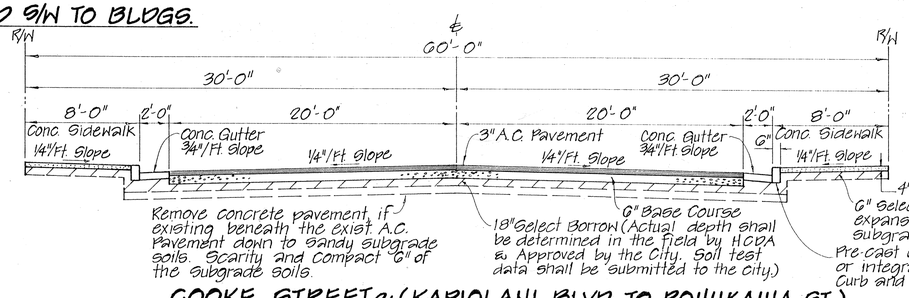

COOKE STREET ~ (KAPIOLANI BLVD. TO POHUKAINA ST.)
60-FT. ROADWAY

Scale: 1" = 5'

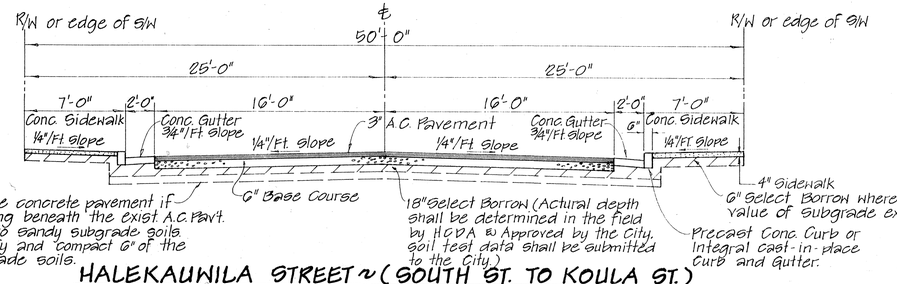

HALEKAUWILA STREET ~ (SOUTH ST. TO KOULA ST.)
50-FT. ROADWAY

Scale: 1" = 5'

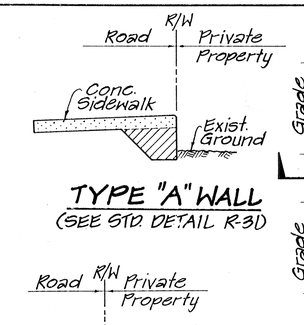

TYPE "A" WALL
(SEE STD. DETAIL R-31)

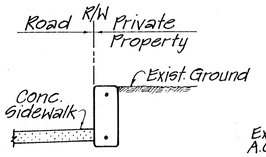

TYPE "B" WALL
(SEE STD. DETAIL R-31)

Location of Type "B" Walls indicated on the plans.

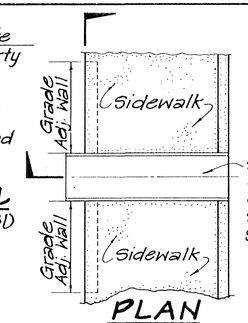

PLAN
Scale: 1/4"=1'-0"

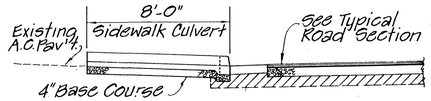

SECTION
Scale: 1/4"=1'-0"

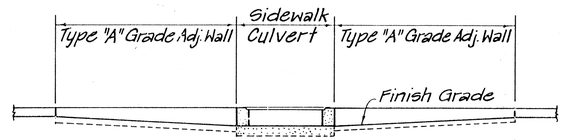

ELEVATION
Scale: 1/2"=1'-0"

NOTE:
SIDEWALK CULVERT SHALL BE MAINTAINED BY ABUTTING PROPERTY OWNERS.

SIDEWALK CULVERT DETAILS

CONSTRUCTION NOTES REINF CONC BUS STOP PADS

1- Transverse joints shall be weakened plane contraction joints space less than 20 feet apart (Detail "B"-"B").
2- Gutters on grades at 12% or less shall be steel trowel finished & gutters on grades greater than 12% shall be broom finished longitudinally.
3- Pavement on grades at 12% or less shall be broom finished transversely & pavement on grades greater than 12% shall bristle brush finished.
4- Reinf. ASTM A615 Grade 40.
5- Concrete pad shall not extend into intersection, shorten dimension as required.
6- Design based on sand, silty clay subgrade.
7- Concrete C & C Class "A"

Quantities (per L.F.)
Conc. - 0.3518 C.Y.
Reinf. - 20.204 lbs.

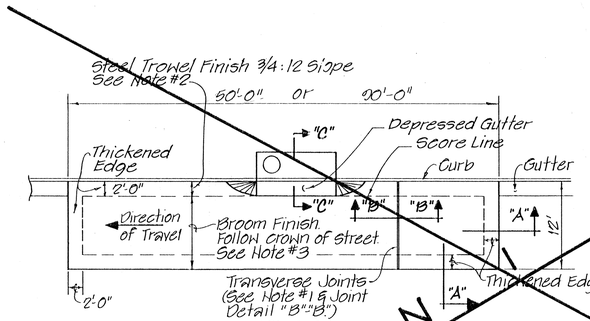

PLAN

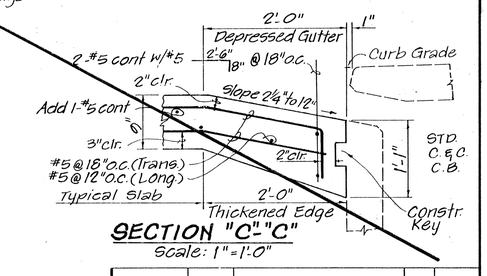

SECTION "C"-"C"
Scale: 1"=1'-0"

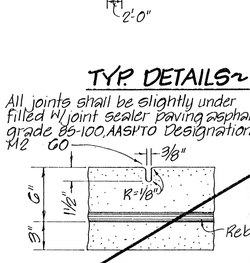

DUMMY GROOVE JOINT
DETAIL "B"-"B"
Scale: 1½"=1'-0"

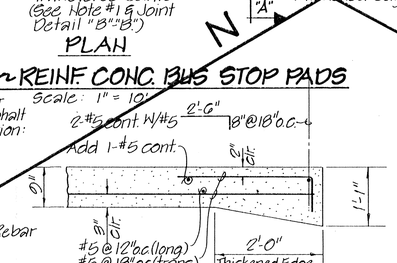

SECTION "A"-"A"
Scale: 3/4" = 1'-0"

1 1/2" = 1'-0" 1' 6" 0 1
1" = 1'-0" 1' 6" 0 1' 2'
3/4" = 1'-0" 1' 0 1' 2' 3'
1/2" = 1'-0" 1' 0 1' 2' 3' 4' 5'
1" = 10'-0" 10 5' 0' 10' 20'
1" = 5'-0" 5' 0 5' 10'

SCALE IN FEET

APPROVED: DATE

CHIEF, DIVISION OF TRAFFIC ENGINEERING, D.O.T.S.

1" = 5'-0"

M. Tsukagoshi 6/21/89

CHIEF, DIVISION OF ENGINEERING, D. P. W.

GEORGE YOKOTA REGISTERED PROFESSIONAL ENGINEER No. 1156-C HAWAII, U.S.A.

PLANS PREPARED BY ME OR UNDER MY SUPERVISION

By: George Yokota

Par En, Inc.
dba Park Engineering

REVISION	DATE	BRIEF	BY	APPROVED

R. M. TOWILL CORPORATION
PLANNERS · ENGINEERS · SURVEYORS · PHOTOGRAMMETRISTS
CONSTRUCTION MANAGERS

HAWAII COMMUNITY DEVELOPMENT AUTHORITY
STATE OF HAWAII

KAKA'AKO COMMUNITY DEVELOPMENT DISTRICT
I.D. 3

TYPICAL ROAD SECTIONS & MISCELLANEOUS DETAILS

ENGINEER: GY CHECKED BY: GY
DRAFTSMAN: DM DATE:
APPROVED:
EXECUTIVE DIRECTOR, HAWAII COMMUNITY DEVELOPMENT AUTHORITY

AS BUILT

FILE	POCKET	FOLDER	NO.

REVISED 3/15/92

Connect to exist. S.M.H. M.H. base to be rechannelled by the Contractor.

1G+26 ± (4'%) Exist. S.M.H. Inv.= (-) 4.87 Adjust Exist. S.M.H. to New Road Grade

1G+20 D.M.H. #A-11 Inv.= (-) 6.26 (12'x 8.5') Pave W/2" A.C. & 6" B.C.

17+14 D.M.H. #A-11a Inv.= (-) 6.21 (12'x 8.5')

17+51 (19.5'%) S.M.H. #17-H I.N.V. = 0.18 17+41 (24'%) C.B. #A-11 Type C Inv.= (-) 2.20 (18")

17+74 D.M.H. #A-12 Inv.= (-) 6.18 (12'x 8.5')

Duct Crossings (See Details on Sht. 39&41)

18+80 (Halekauwila) D.M.H. #A-10 Inv.= (-) 6.31 (14'x 8.5')

15+13.20 Cooke = 19+06.14 Halekauwila Install St. Mon. EL = 4.34

B.M.: "28"(-) on S/W Elev. = 4.76 (See Const. Note 19)

Limit of Grading

Cutting of exist. sewer within M.H. by the Contractor. See Channelization Detail this sht.

50' PROPOSED HALEKAUWILA STREET

Duct Crossing See Detail on Sht. 39

18+44.36 C.R. = 28

Existing M.O.N. Halekauwila Street

Sewer Line #6

Demolish & Remove W.V.

1G+78 (19'%) S.M.H. #17-H Inv.= 0.50 (8")

1G+79 1-20"BFV 150# 1-Type "A" R.C.M.H.

1G+88 Inv.= (-) 2.32 (18")

Pave W/2" A.C. & 6" B.C.

18"RCP CL III 12.00'@ 1.00%

25 L.F. Type "B" Wall

S/N 430-52184 M/N 191848947 T-3/4" 1/4" Cu. Lat.

12' Wide D/W 148 Sq. Ft. Corner Only. Curb Flush W/Gutter

42' Wide D/W 371 Sq. Ft.

Structure to be renovated (By Others)

S/N 430-52116 M/N 190908849 CN-3/4"

S/N 430-52064 M/N 194822253 T-3/4"

"C-4" (1 1/2" cu.) Lat.

18+57 1-20"BFV 150# 1-Type "A" R.C.M.H.

S/N 430-52160 M/N 810301407 T-3/4" 1" Cu. Lat.

S/N 430-52040 0/F 8/16/82 1" Galv. Lat.

Extend downspout to curb

Relocate

New R/W

Existing R/W

Relocate U.S. Mail Box

COOKE STREET

14+92 (5.5'%) S.M.H. #G-A Inv.= (-) 5.04 S.M.H. to be P.V.C. Lined See Detail on Sht. 42

18+66.47 C.R. = 28

Sign

Install St. Mon.

6" R.C. Jacket

Abandon

New 3/4" Gas

231'52" — 114.46'

231'52" — 255.00 (MON. to MON.)

12'x 8.5' Box "D" Drain

1"G" Drain Line "A"

5 L.F. Plain Cone. Jacket

18"RCP CL III 24000@0.50%

17+42.7 EL=4.69 Install St. Mon.

Exist. Sewer to remain

Reconnect Gas

Duct Crossing See Sht. 41

Structure to be renovated

MATCH LINE

24"S

20"W

6 L.F. R.C. Jacket

Relocate

Cut & Plug

Abandon

Install Corp Stop before and after Meter

Limit of Grading

20' Wide D/W 208 Sq. Ft.

Proposed 1" Gas Line (Relocation Work to be done by Gascon, Inc. & paid For by the Contractor)

Extend downspout to curb

Remove Sidewalk, Curb, Gutter & A.C. Pavt. and pave area between new sidewalk and exist. R/W W/4" Conc. and match exist. R/W elevation. Install score line along New ℄.

Relocate Tree

115 L.F. R.C. Jacket

1G+15 1-2" A.R.V. 1-Air Valve Box

1G+09 (3'%) S.M.H. #G-C (Shallow Drop) Inv.= (-) 0.80 (18") = (-) 4.81 (Ex. 24") S.M.H. to be P.V.C. Lined (See detail on Sheet #1)

1G+00 (11'%) S.M.H. #G-B Inv.= (-) 0.91 (Exist. 8")

Extend Sewer Lateral to New ℄ and Relocate Cleanout to within New ℄.

17+15 (16.5'%) Deflect Line

30"RCP CL III 31.00'@ 0.50%

4 L.F. Drop Curb

1G+86 C.B. #A-12 Type C Inv.= (-) 2.20

PRIVATE ROAD (Connects to Ilaniwai St.) TMK: 1-7-1-42: 74

ILANIWAI ST.

SEE INSET FOR WATERLINE NOTES

17+41 (32'%) D.M.H. #A-12a Inv.= (-) 1.38 (30")

17+76 C.B. #A-13 Type C Inv.= 1.20 (18")

18+03 F.H. Conn. 1-20"x 6" Tee 1-6"G.V., 150# 1-Valve Box 1-6" ¼ Bend 1-FH 14 L.F. 6" D.I. Pipe Cl. 52 3-Conc. Blks.

18+66 1-2" Air Relief Valve W.M. = 80 p.s.i. 1-Air Valve Box

Remove & Salvage F.H.

Remove & Salvage G.V.

Remove Exist. F.H.

Remove and Reinstall Meter Boxes

Cut & Plug Relocate Meter to 18+30 Halekauwila

6"W to be abandoned

8"W to be abandoned

20"W

8"W to be abandoned

14+76 1-20"BFV 150# 1-Type "A" R.C.M.H.

14+90 1-20" ½ Bend (T.V.)

15+00 1-20" ½ Bend (B.V.)

MATCH LINE (SEE SHT. 19)

15+44 (26'%) C.B. #A-10 Type C Inv.= (-) 1.40 (18")

15+88 F.H. Conn. 1-20"x 6" Tee 1-6"G.V., 150# 1-Type B M.H. 1-FH 11 L.F. 6" D.I. Pipe Cl. 52 2-Conc. Blks.

℄ CURVE DATA

Δ = 16°00'

4½ = 8°00'

R = 800.00

T = 112.43

C = 222.68

Lc = 223.40

Provide smooth riding connection

PLAN

SCALE: 1" = 20'

NOTE:

For Special Drain Manhattan Detail over Box Drain, See Sheet 34.

Demolish and remove C.B., D.M.H. and Drainline in the existing Sidewalk and Pavement Areas.

INSET

COOKE STREET

17+56 (Cooke) 1-20"x 8" Tee

20 L.F. R.C. Jacket

18"D

20'W

0+GO (Ilaniwai) 1-8" G.V. 150# 1-Valve Box

Remove Exist F.H.

Reconnect exist 1¼" cu. Lateral to New 8" Main

New 8" Water

S/N 430-52089 M/N 770331716 B03

0+G3 (Ilaniwai) 1-8" ⅛ Bend 1-Conc. Block

0+G1 (Ilaniwai) Conn to exist 6" W.L. 1-8" ⅛ Bend 1-8"x 6" Reducer 1-6" Sleeve, 12" long 6 LF 6" D.I. Pipe 1-Conc. Blk. w/ Structural Struts Temp. for Testing 1-8" Cap W/2½" C.O. 1-Conc. Blk. (For Profile, See Sht. 80)

Cut & Plug 1-6" Gate Valve 1-Conc. Blk.

ILANIWAI STREET

8"W

8"S

CHANNELIZATION DETAIL FOR S.M.H. #G-B & #G-C

NO SCALE

Channelization

Exist. 24"S

New 8"S

Exist. 8"S

S.M.H. #G-B

S.M.H. #G-C

Exist. 24"S

PROFILE

SCALE: HORIZ. 1" = 20'

VERT. 1" = 4'

Left Exist. ℄ Ground

Right Exist. ℄ Ground

Invert of Exist. 8"W

Invert of New 20"W

Finished Curb Grade

B.V.C. 4.58

P.I.V.C. 4.40

P.R.V.C. 4.82

P.I.V.C. 5.28

P.R.V.C. 5.08

P.I.V.C. 4.88

E.V.C. 5.08

B.V.C. 5.28

P.I.V.C. 5.48

100' V.C.

90' V.C.

(-)0.40%

0.40%

0.93%

24" V.C.P. 252.00 @ 0.08%

24" V.C.P. 134.50 @ 0.13%

12'x 8.5' B.D. 90.00 @ 0.05%

14'x 8.5' B.D. 10.00 @ 0.05%

14'x 8.5' B.D. 205.00 @ 0.07%

12'x 8.5' B.D. 94.00 @ 0.05%

12'x 8.5' B.D. 60.00' @ 0.05%

8" V.C.P. 317.00 @ 0.44%

12'x 8.5' B.D. 187.00' @ 0.05%

19 L.F. R.C. Jacket

5 L.F. Plain Cone. Jacket

14'x 8.5' B.D.

12'x 8.5' Box Drain

115 L.F. R.C. Jacket

Invert of Exist. 8"S

Invert of Exist. 24"S

MATCH LINE

20"W ½ Bend (T.V.) (-)5.40

20"W ½ Bend (B.V.) (-)5.40

20"W ½ Bend (T.V.) (-)5.33

20"W ½ Bend (B.V.) (-)5.20

20"W ½ Bend (T.V.) (-)5.20

20"W ½ Bend (B.V.) (-)5.05

20"W (-)0.60

20"W (-)0.70

20"W (-)0.80

20"W (-)1.00

20"W (-)1.40

20"W (-)1.80

20"W (-)2.20

20"W (-)2.60

S.M.H. #G-A (-)9.04

S.M.H. #G-B (-)8.70

S.M.H. #G-C (-)8.80

D.M.H. #A-10 (-)7.31 (14'x 8.5' B.D.)

D.M.H. #A-11 (-)6.86 (12'x 8.5' B.D.)

D.M.H. #A-12 (-)6.18 (12'x 8.5' B.D.)

D.M.H. #A-12a (-)7.38 (30")

C.B. #A-10 (-)7.40

C.B. #A-11 (-)8.20

C.B. #A-12 (-)7.20

C.B. #A-13 (-)7.20

Existing S.M.H. (-)7.81

Existing 8"S Stub

Smaller Drop

14+00 15+00 16+00 17+00 18+00 19+00

1"=4'-0" 4' 2' 0 4' 8'

1"=20'-0" 20' 10' 0 20' 40'

SCALE IN FEET

CHIEF, DIV. OF TRAFFIC ENGINEERING, D.G.T.S. DATE 1/12/90

CHIEF, PLNG. & ENGR., B.W.S. DATE 1/4/89

CHIEF, DIV. OF W.W.M., D.P.W. DATE 5/8/89

CHIEF, DIV. OF ENGINEERING, D.P.W. DATE 6/21/89

PROPOSED C & C STREET
EXISTING C & C STREET

REVISION	DATE	BRIEF	BY	APPROVED
2	8/17/89	Revised Curb Return & C.B.	G.Y.	
1	11/7/91	Revised Sewer Line #8	D.E.	

R. M. TOWILL CORPORATION
PLANNERS · ENGINEERS · SURVEYORS · PHOTOGRAMMETRISTS
CONSTRUCTION MANAGERS

GEORGE YOKOTA REGISTERED PROFESSIONAL ENGINEER No. 11156-C HAWAII, U.S.A.

THIS WORK WAS PREPARED BY ME OR UNDER MY SUPERVISION.

PARK ENGINEERING, INC.

Par En, Inc. dba Park Engineering

HAWAII COMMUNITY DEVELOPMENT AUTHORITY
STATE OF HAWAII

KAKA'AKO COMMUNITY DEVELOPMENT DISTRICT

I.D. 3

COOKE STREET
HALEKAUWILA TO STA. 19+25
PLAN AND PROFILE

ENGINEER: W.T.L. CHECKED BY: G.Y.

DRAFTSMAN: DATE:

APPROVED:

EXECUTIVE DIRECTOR, HAWAII COMMUNITY DEVELOPMENT AUTHORITY

FILE	POCKET	FOLDER	NO.

AS BUILT SHEET 12 OF 117

REVISED 3/5/92

DETAIL ~ RC CRADLE FOR SEWER

No Scale

NOTE:

For Special Drain Manhole Detail over Box Drain, See Sheet 34.

Demolish & remove C.B., D.M.H. and Drainline in the existing sidewalk area.

1" = 4'-0" 4' 2' 0 4' 8'

1" = 20'-0" 20' 10' 0 20' 40'

SCALE IN FEET

APPROVED:

CHIEF, DIV. OF TRAFFIC ENGINEERING, D.O.T.S.	DATE 1-12-92
CHIEF, PLNG. & ENGR., B.W.S.	DATE 12/6/89
CHIEF, DIV. OF W.W.M., D.P.W.	DATE 5/8/89
CHIEF, DIV. OF ENGINEERING, D.P.W.	DATE 6/21/89

REV.	DATE	BRIEF	BY	APPROV.
6	1/17/91	REVISED CURB RETURN	DE	
6	1/17/91	REVISED S.L. #9	DE	

PROPOSED C & C STREET
EXISTING C & C STREET

REVISION	DATE	BRIEF	BY	APPROVED
4	10/31/90	Added Gas Line Crossing.	G.Y.	11-27-90 DOE

GEORGE YOKOTA REGISTERED PROFESSIONAL ENGINEER No. 1156-C HAWAII, U.S.A.

THIS WORK WAS PREPARED BY ME OR UNDER MY SUPERVISION

PARK ENGINEERING, INC.

Par En, Inc.
dba Park Engineering

R. M. TOWILL CORPORATION
PLANNERS · ENGINEERS · SURVEYORS · PHOTOGRAMMETRISTS
CONSTRUCTION MANAGERS

HAWAII COMMUNITY DEVELOPMENT AUTHORITY
STATE OF HAWAII

KAKA'AKO COMMUNITY DEVELOPMENT DISTRICT

I.D. 3

COOKE STREET
STA. 19+25 TO STA. 24+60
PLAN AND PROFILE

ENGINEER: W.T.L. CHECKED BY: G.Y.
DRAFTSMAN: A.M. DATE:
APPROVED:
EXECUTIVE DIRECTOR, HAWAII COMMUNITY DEVELOPMENT AUTHORITY

AS BUILT SHEET 13 OF 117

FILE	POCKET	FOLDER	NO.

CHIEF, DIV. OF TRAFFIC ENGINEERING, D.O.T.S. DATE

CHIEF, PLNG. & ENGR., B.W.S. DATE 12/6/89

CHIEF, DIV. OF W.W.M., D.P.W. DATE 5/8/89

CHIEF, DIV. OF ENGINEERING, D.P.W. DATE 6/21/89

GEORGE YOKOTA REGISTERED PROFESSIONAL ENGINEER No. 1156-C HAWAII, U.S.A.

PROPOSED C & C STREET

REVISION	DATE	BRIEF	BY	APPROVED
6	1/17/91	CURB RETURNS AND GRADE ADJUSTMENT WALLS	D.E.	C.T.S. D.O.E.
6	1/17/91	REVISED SL #8.	D.E.	D.W.W.M.

R. M. TOWILL CORPORATION
PLANNERS · ENGINEERS · SURVEYORS · PHOTOGRAMMETRISTS
CONSTRUCTION MANAGERS

THIS WORK WAS PREPARED BY ME OR UNDER MY SUPERVISION.
PARK ENGINEERING, INC.

Par En, Inc.
dba Park Engineering

HAWAII COMMUNITY DEVELOPMENT AUTHORITY
STATE OF HAWAII

KAKA'AKO COMMUNITY DEVELOPMENT DISTRICT
I.D. 3

HALEKAUWILA STREET
STA. 15+50 TO P.C. STA. 19+69.57
PLAN AND PROFILE

ENGINEER: CO CHECKED BY: G.Y.
DRAFTSMAN: AM DATE:
APPROVED:
EXECUTIVE DIRECTOR, HAWAII COMMUNITY DEVELOPMENT AUTHORITY

AS BUILT 1-30-92

SHEET 18 OF 117

FILE	POCKET	FOLDER	NO.

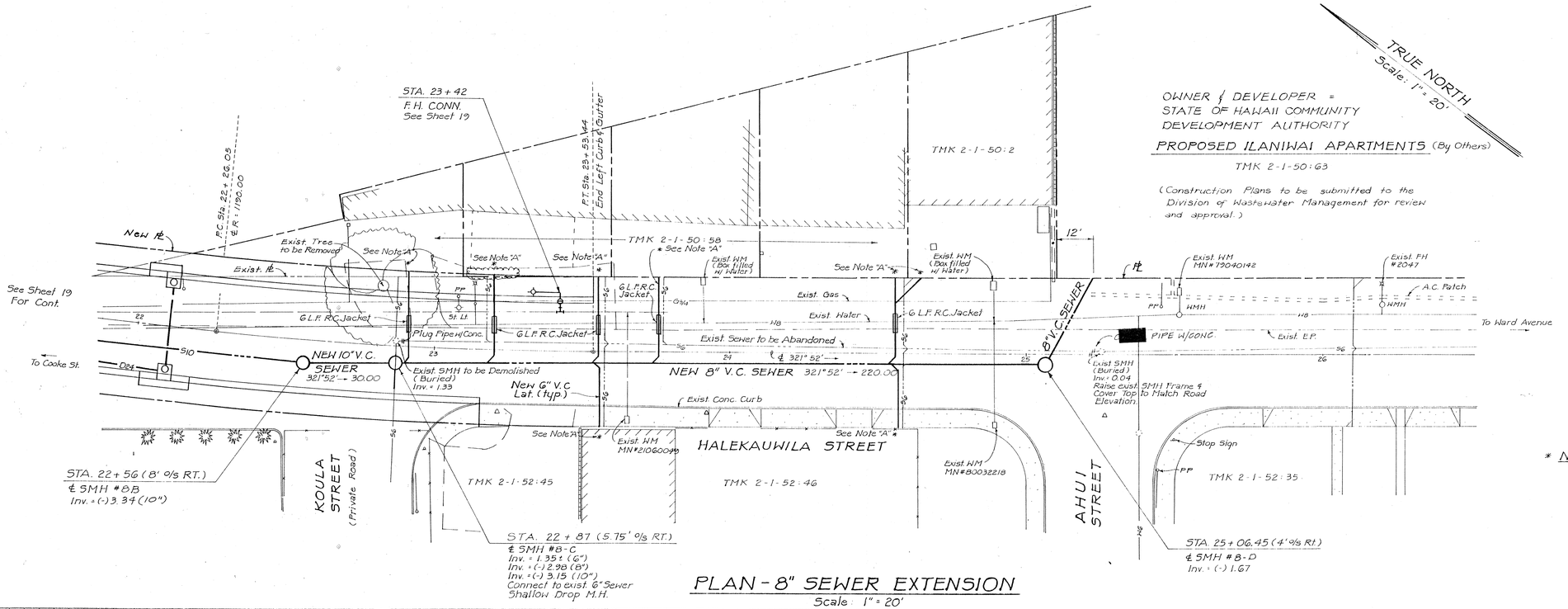

* NOTE "A": Reconnect existing plumbing facilities to new sewer laterals.

PLAN - 8" SEWER EXTENSION

Scale: 1" = 20'

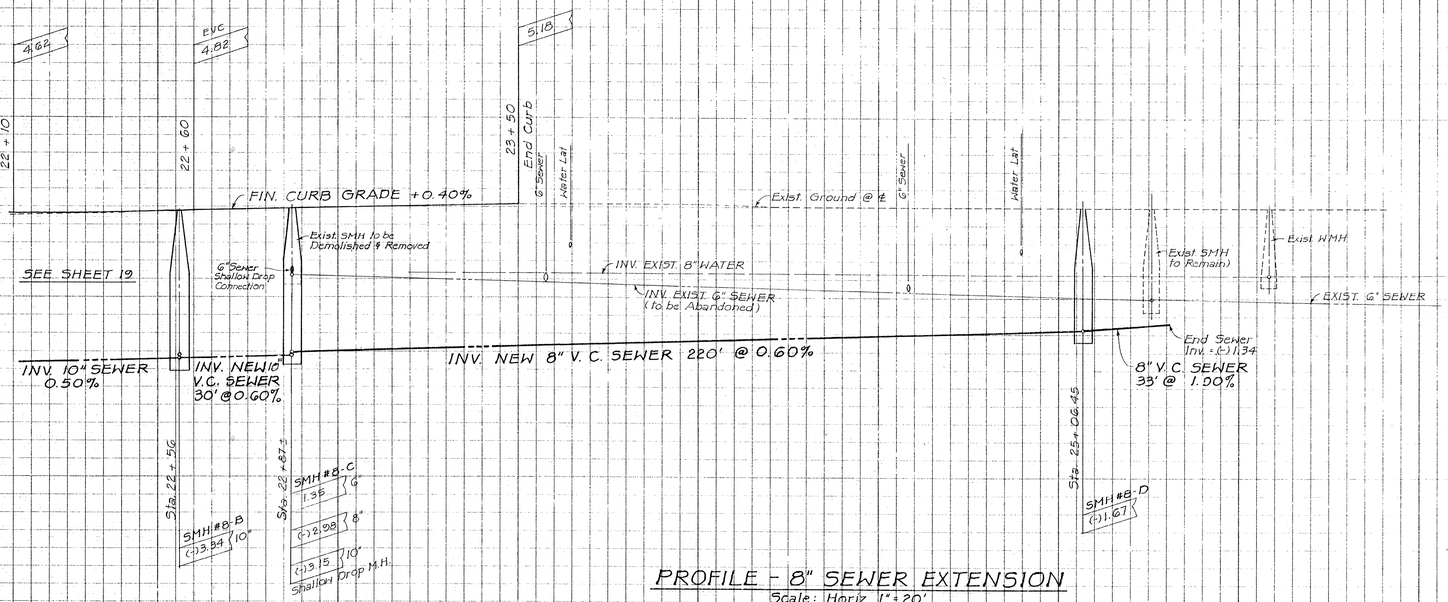

PROFILE - 8" SEWER EXTENSION

Scale: Horiz. 1" = 20'
Vert. 1" = 4'

"NEW SHEET"

REVISION	DATE	BRIEF	BY	APPROVED

R. M. TOWILL CORPORATION
PLANNERS · ENGINEERS · SURVEYORS · PHOTOGRAMMETRISTS
CONSTRUCTION MANAGERS

HAWAII COMMUNITY DEVELOPMENT AUTHORITY
STATE OF HAWAII

KAKA'AKO COMMUNITY DEVELOPMENT DISTRICT

I. D. 3

HALEKAUWILA STREET 8" SEWER EXTENSION

APPROVED:

CHIEF, DIVISION OF WWM
DEPARTMENT OF PUBLIC WORKS
CITY & COUNTY OF HONOLULU

DATE 6/19/91

ENGINEER	CDSK	CHECKED BY	CDSK
DRAFTSMAN	JK	DATE	4/22/91
APPROVED			

EXECUTIVE DIRECTOR, HAWAII COMMUNITY DEVELOPMENT AUTHORITY

AS BUILT

SHEET 19A OF 117

FILE	POCKET	FOLDER	NO.

BRUNING 44-560 30994

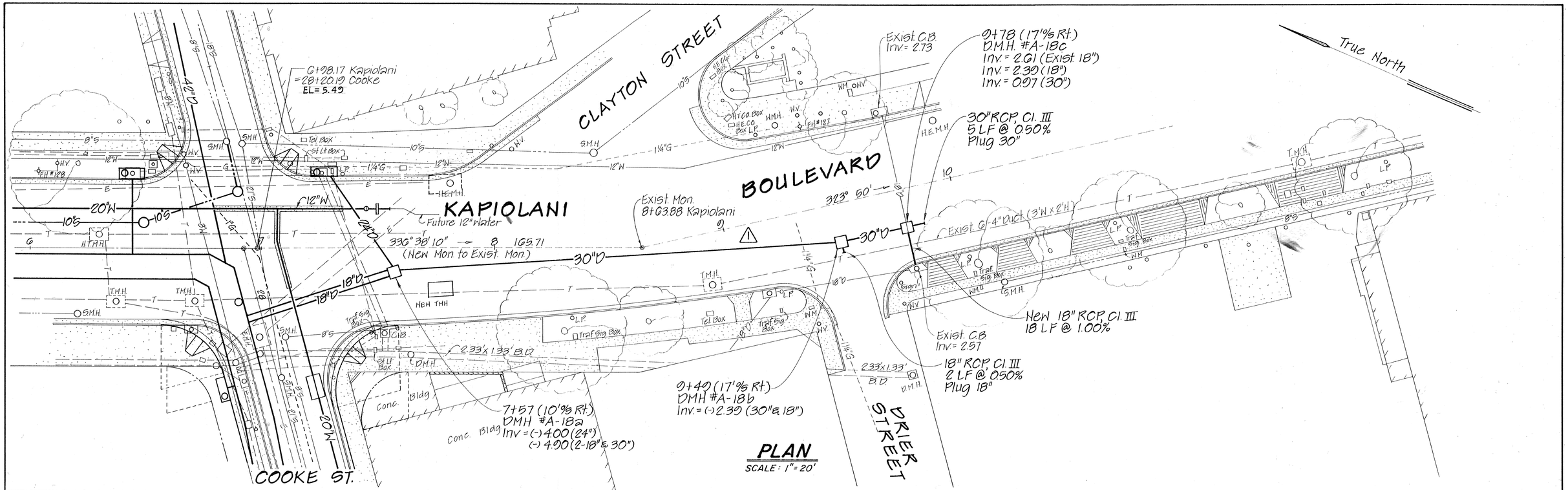

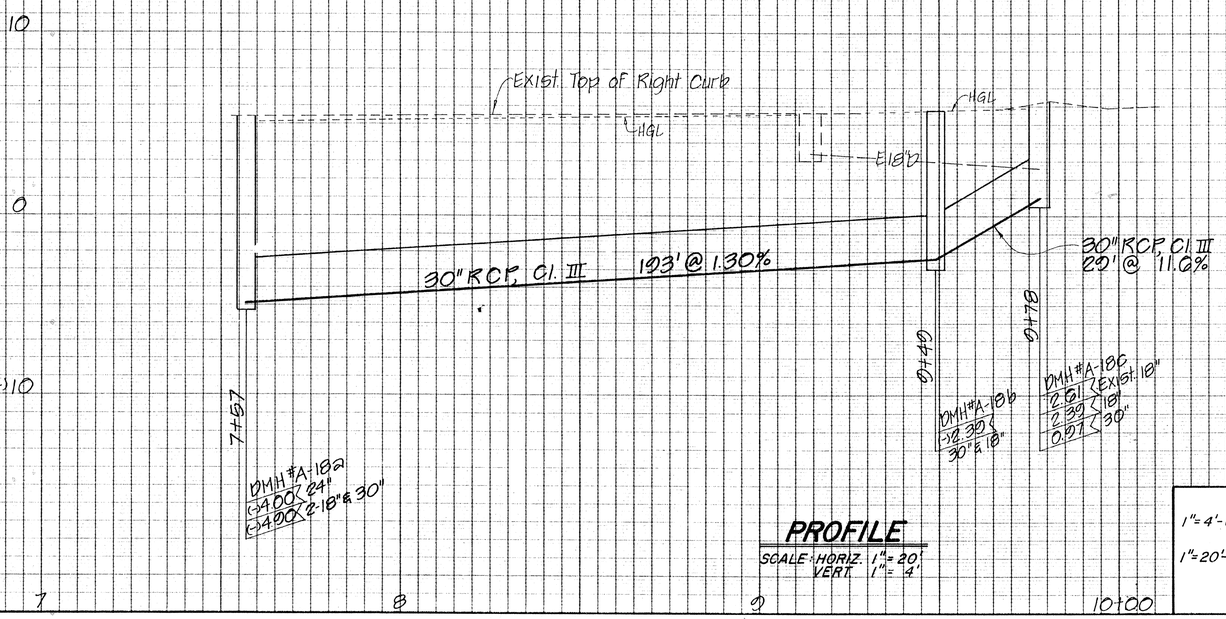

1"=4'-0" 4' 2' 0 4' 8'

1"=20'-0" 20' 10' 0 20' 40'

SCALE IN FEET

APPROVED:

CHIEF, DIV. OF TRAFFIC ENGR., D.O.T.S. DATE

M. Fukagawa 8/21/89

CHIEF, DIV. OF ENGINEERING, D.P.W. DATE

for 12/6/89

CHIEF, PLNG. & ENGR., BWS # DATE

EXISTING C & C STREET

REVISION	DATE	BRIEF	BY	APPROVED
1	8/14/89	ADDED THIS SHEET	G.Y.	—

R. M. TOWILL CORPORATION
PLANNERS · ENGINEERS · SURVEYORS · PHOTOGRAMMETRISTS
CONSTRUCTION MANAGERS

GEORGE YOKOTA
REGISTERED PROFESSIONAL ENGINEER
No. 1156-C
HAWAII, U.S.A.

George Yokota

Par En, Inc.
dba Park Engineering

HAWAII COMMUNITY DEVELOPMENT AUTHORITY
STATE OF HAWAII

KAKA'AKO COMMUNITY DEVELOPMENT DISTRICT

I. D. 3

KAPIOLANI BOULEVARD

PLAN AND PROFILE

ENGINEER: G.Y. CHECKED BY: G.Y.
DRAFTSMAN: A.M. DATE:
APPROVED:
EXECUTIVE DIRECTOR, HAWAII COMMUNITY DEVELOPMENT AUTHORITY

AS BUILT SHEET 65A OF 117

FILE	POCKET	FOLDER	NO.

ALA MOANA BOULEVARD

COOKE STREET

AUAHI STREET

Existing Building to remain

Construct conc. ramp

Exist Conc. Walk to remain

Remove

Exist. A.C. Pav't

Exist. Drainage Flow

Provide smooth-riding connection to existing A.C. pavement.
Exc. = 10 cu. yd.
2" A.C. = 48 sq. yd.
6" B.C. = 48 sq. yd.

TRUE NORTH
Scale: 1" = 20'

Type "A" Grade Adjustment Wall.
146 Lin. Ft.

Type "B" Grade Adjustment Wall
97 Lin. Ft.

New R/W Line

Exist. A.C. Pav't.

Exist. R/W Line

Sidewalk Culvert

Sidewalk Culvert

Demolish and remove existing concrete sidewalk and curb

Portion of exist. conc. walkway to remain.

Construct new 4" thick conc. walkway (100 sq. ft.). Connect to new sidewalk.

Provide smooth-riding connection to existing A.C. pavement.
Exc. = 16 cu. yd.
2" A.C. = 38 sq. yd.
6" B.C. = 38 sq. yd.

Existing Building

Existing A.C. Pav't

Exist. Drainage Flow

Exist. Blk. Wall (To Remain)

Exist. Blk. Wall (To Remain)

Existing Building

New R/W Line

Exist. R/W Line

Building Renovation by others

Exist. R/W Line

New R/W Line

Replace exist. conc. Block Wall See sheet 16

Provide Smooth Riding Connection to exist. A.C. Pav't.
Exc. = 104 cu. yd.
2" A.C. = 52 sq. yd.
6" B.C. = 52 sq. yd.
#67 C.R. = 44 cu. yd.

Exist. Drainage Flow

Exist. A.C. Pavement

Exist. Building to remain

Existing conc. landing and curb to remain

Exist. R/W Line

New R/W Line

Type "B" Grade Adjustment Wall 35 Lin. Ft

Provide smooth-riding connection to existing A.C. pavement.
Exc. = 2 cu. yd.
2" A.C. = 10 sq. yd.
6" B.C. = 10 sq. yd.

Provide smooth-riding connection to existing A.C. pavement
Exc. = 10 cu. yd.
2" A.C. = 48 sq. yd.
6" B.C. = 48 sq. yd.

GRADE ADJUSTMENT PLAN

Scale: 1" = 20'

GRADE ADJUSTMENT PLAN

Scale: 1" = 20'

LEGEND

FILL AREA

SMOOTH-RIDING ASPHALT CONN. TO EXIST A.C. PAV'T.

POHUKAINA STREET

BEGIN PROJECT Sta. 10 + 68.62

Provide smooth-riding connection to existing A.C. pavement
Exc. = 5 cu. yd.
2" A.C. = 19 sq. yd.
6" B.C. = 19 sq. yd.

Exist. A.C. Pav't

Existing Drainage Flow

Building Renovation by others

Portion of exist. block wall to remain. Wall Renovation by Others

Provide smooth-riding connection to existing A.C. Pavement
Exc. = 9 cu. yd.
2" A.C. = 40 sq. yd
6" B.C. = 40 sq. yd.

Exist. A.C. Pav't

Exist. Drainage Flow

Building Renovation by others

Existing Building to be demolished by others

Exist. R/W Line

New R/W Line

Provide smooth-riding connection to existing A.C. pavement.
A.C. transition = 16 sq. yd.

Exist. Drainage Flow

Exist. A.C. Pav't

Exist. Building to be demolished by others

MATCH LINE Sta. 14 + 52

Scarify and Remove Exist. A.C. Pav't and Construct 4" Thick Conc. Sidewalk

LIMIT OF THIS WORK

Exist. Curb & S/W to be Removed

ELIMINATED
Construct 6" Thk. Conc. Driveway
& Reinf. W1 6x6 - W1.4 x W1.4 W1.4 WWM

Building Renovation by others

Portion of Exist. Blk. Wall (To Remain)

Existing Drainage Flow

Exist. Wall (To Remain)

Exist. A.C. Pav't

Provide smooth-riding connection to existing A.C. pavement
Exc. = 3 cu. yd.
2" A.C. = 14 sq. yd.
6" B.C. = 15 sq. yd.

GRADE ADJUSTMENT PLAN

Scale: 1" = 20'

1" = 20'

20' 0' 20' 40'

Graphic Scale

NOTE:

Sidewalk Culverts to be Maintained by Property Owners.

M. Fukagawa 6/21/89

CHIEF, DIV. OF ENGINEERING, D.P.W. DATE

PROPOSED C & C STREET
EXISTING C & C STREET

REVISION	DATE	BRIEF	BY	APPROVED

R. M. TOWILL CORPORATION
PLANNERS · ENGINEERS · SURVEYORS · PHOTOGRAMMETRISTS
CONSTRUCTION MANAGERS

HAWAII COMMUNITY DEVELOPMENT AUTHORITY
STATE OF HAWAII

KAKA'AKO COMMUNITY DEVELOPMENT DISTRICT

IMPROVEMENT DISTRICT 3

COOKE STREET

GRADE ADJUSTMENT PLAN

ANDREW S. H. YOUNG
REGISTERED PROFESSIONAL ENGINEER
No. 3909-C
HAWAII, U.S.A.

THIS WORK WAS PREPARED BY ME OR UNDER MY SUPERVISION

Andrew Young
Signature 10-21-88

AUSTIN, TSUTSUMI, & ASSOC., INC.
ENGINEERS SURVEYORS · HAWAII GUAM

ENGINEER: DI CHECKED BY: ASHY

DRAFTSMAN: MV, RG DATE:

APPROVED:

EXECUTIVE DIRECTOR, HAWAII COMMUNITY DEVELOPMENT AUTHORITY

FILE	POCKET	FOLDER	NO.

AS BUILT SHEET 258 OF 117

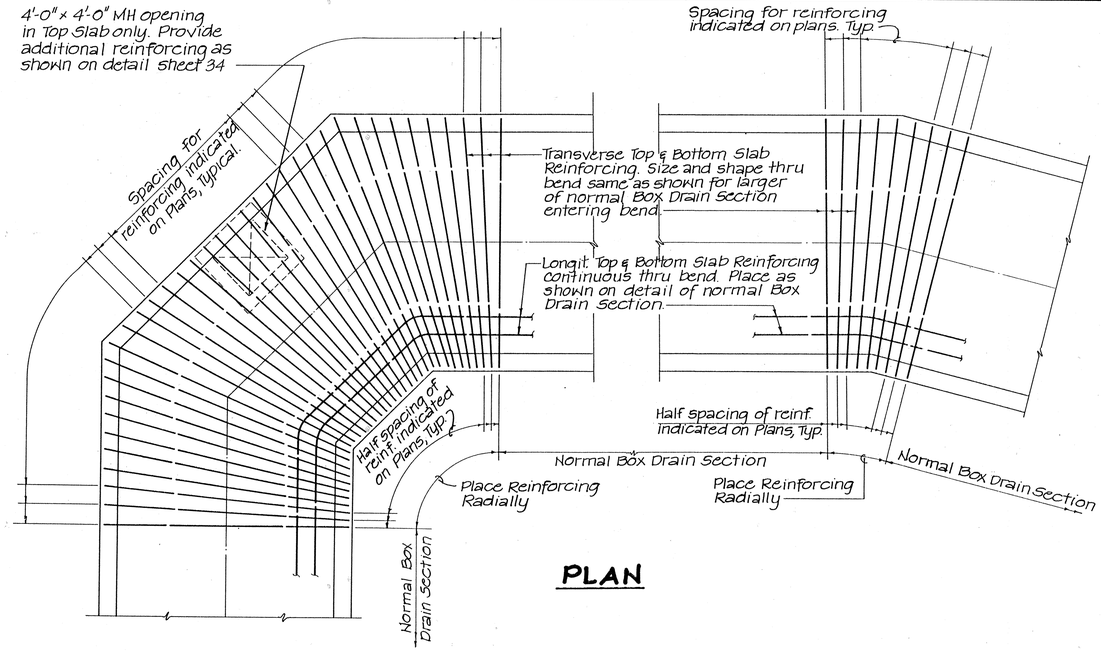

PLAN

TYPICAL BOX DRAIN SLAB REINFORCING @ BENDS (A/26)

N.T.S.

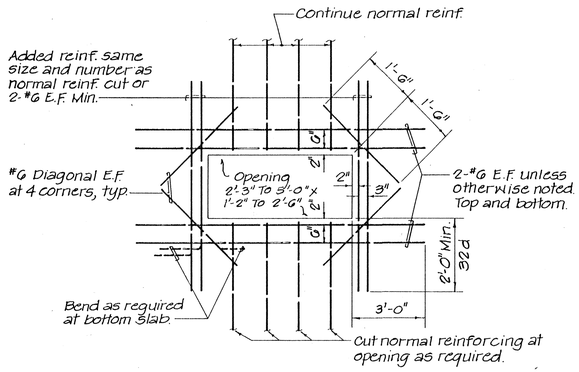

CATCH BASIN OPENING INTO BOX DRAIN
TYPICAL ADDED REINFORCING DETAIL

Scale : 1/2" = 1'-0"

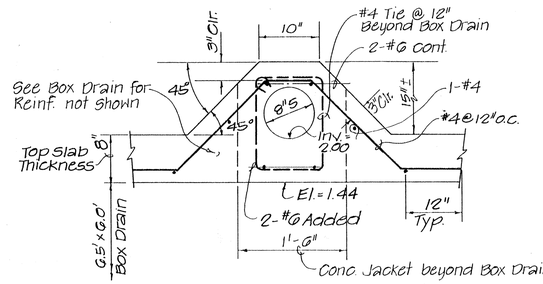

8" SEWER @ (-) 1+33 KAPIOLANI BLVD.

Scale : 1" = 1'-0"

STRUCTURAL NOTES FOR DRAINAGE STRUCTURES:

1. Concrete shall be City & County of Honolulu Class "A", 3000 p.s.i @ 28 days.
2. Reinforcing bars shall conform to the requirements of ASTM-A615, Grade 40 for Box Drain and for all other Drainage Structures.
3. Concrete protection for reinforcement

Soffit Top Slab	1 1/2" Clear Cover
Soffit Bottom Slab	3" Clear Cover
All others	2" Clear Cover, exact as noted
Concrete in contact with Sea Water	4" @ Soffit Bottom Slab; 3" All Others

4. Splices in reinforcement
   Lapped splices shall be staggered where possible.
   Lapped distances for main reinforcing shall be 30 diameters unless shown otherwise (1'-8" min.).
   Lapped distances for temperature and shrinkage reinforcing shall be 24 diameters unless shown otherwise (1'-0" min.).
5. Transverse bars shall be placed radially at curves, unless shown otherwise.
6. Expansion joints shall be spaced at intervals of 60' maximum unless noted otherwise.
7. All foundations and bottom slabs shall rest on well compacted crushed rock base as shown. Over excavation beyond the limits shown, except for unsuitable material, shall not be paid for and shall be backfilled with crushed rock at the Contractor's expanse.

CHIEF, DIV. OF W.W.M., D.P.W. — DATE 5/8/89

M. Fukagawa — CHIEF, DIV. OF ENGINEERING, D.P.W. — DATE 6/21/89

1/2" = 1'-0" 1' 0' 1' 2' 3' 4' 5'

1" = 1'-0" 1' 6" 0 1' 2'

SCALE IN FEET

TIT KWONG CHUN REGISTERED PROFESSIONAL ENGINEER No. 2147-S HAWAII, U.S.A.

THIS WORK WAS PREPARED BY ME OR UNDER MY SUPERVISION

By: [signature]

Par En, Inc.
dbo Park Engineering

REVISION	DATE	BRIEF	BY	APPROVED

R. M. TOWILL CORPORATION
PLANNERS · ENGINEERS · SURVEYORS · PHOTOGRAMMETRISTS
CONSTRUCTION MANAGERS

HAWAII COMMUNITY DEVELOPMENT AUTHORITY
STATE OF HAWAII
KAKA'AKO COMMUNITY DEVELOPMENT DISTRICT
I.D. 3 (FNT)

DETAIL BOX DRAIN

ENGINEER: T.K.C. CHECKED BY: T.K.C.
DRAFTSMAN: A.C. DATE:
APPROVED: [signature]
EXECUTIVE DIRECTOR, HAWAII COMMUNITY DEVELOPMENT AUTHORITY

AS BUILT SHEET 26 OF 47

FILE	POCKET	FOLDER	NO.

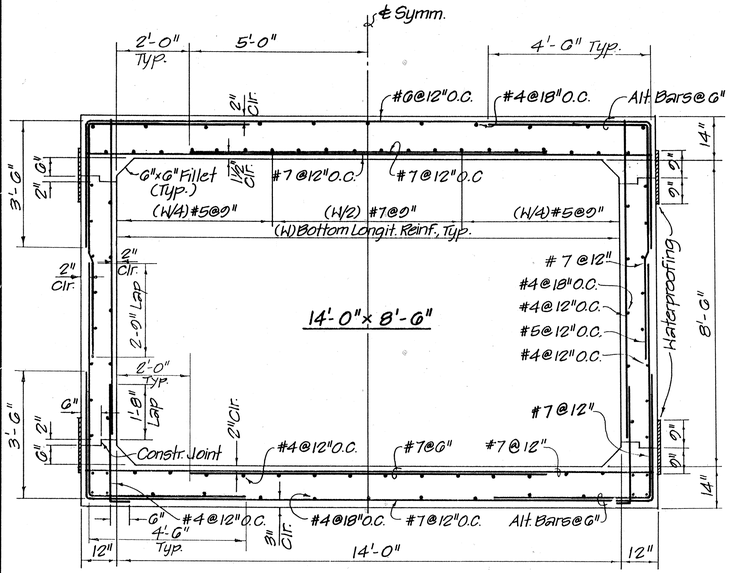

SECTION A
Scale: ½"= 1'-0" (A / 27)

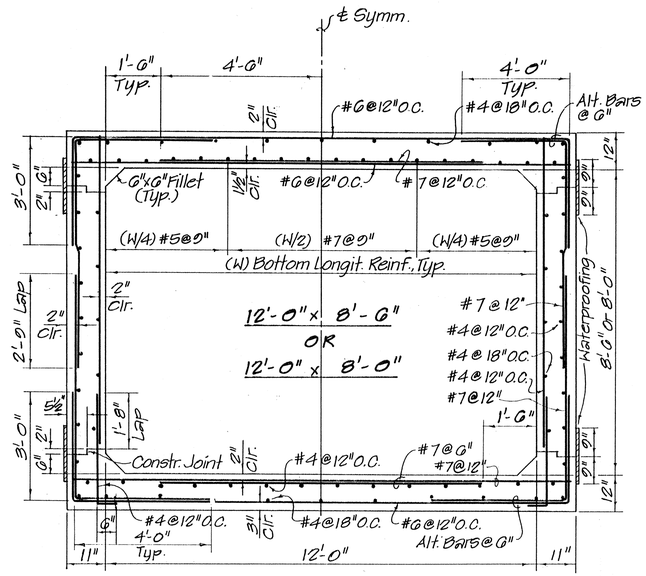

SECTION B
Scale: ½"= 1'-0" (B / 27)

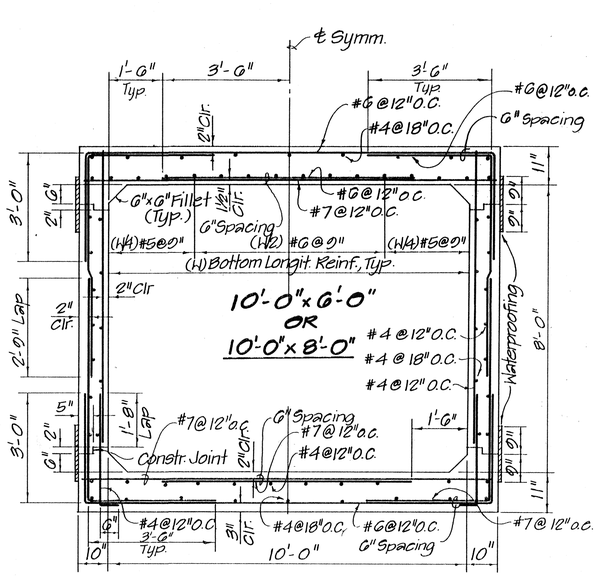

SECTION C
Scale: ½"= 1'-0" (C / 27)

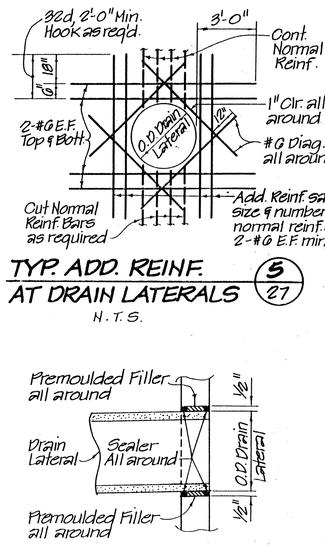

TYP. ADD. REINF. AT DRAIN LATERALS (5 / 27)
N.T.S.

TYP. DRAIN LATERAL CONN. TO BOX DRAIN (6 / 27)
N.T.S.

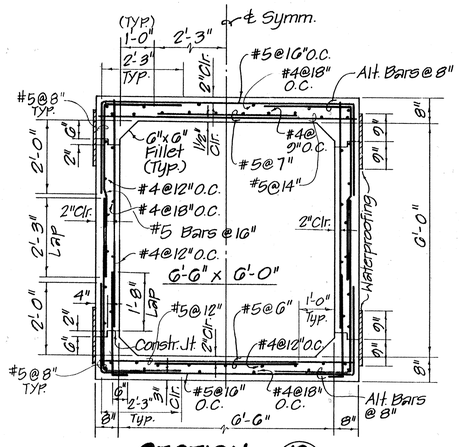

SECTION D
Scale: ½"= 1'-0" (D / 27)

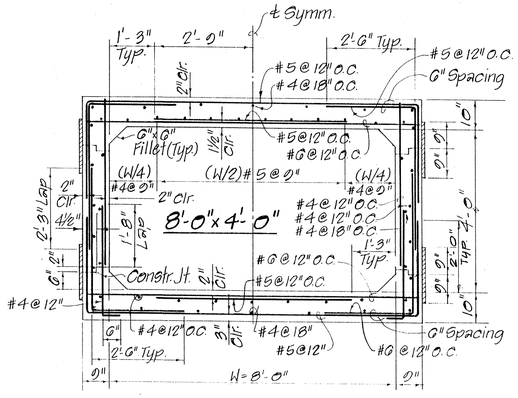

SECTION E
Scale: ½"= 1'-0" (E / 27)

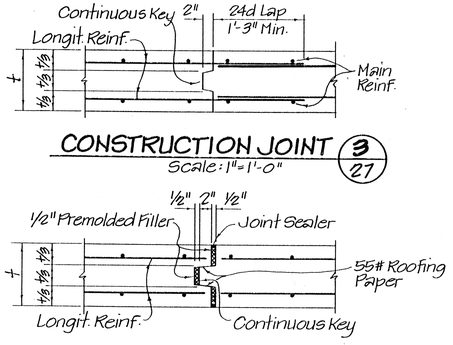

CONSTRUCTION JOINT (3 / 27)
Scale: 1"=1'-0"

EXPANSION JOINT (4 / 27)
Scale: 1"=1'-0"

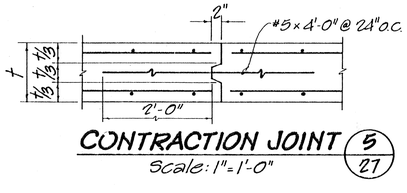

CONTRACTION JOINT (5 / 27)
Scale: 1"=1'-0"

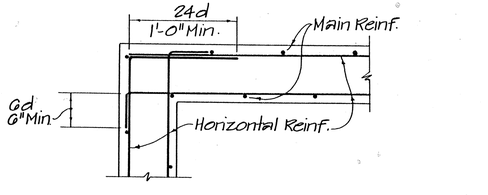

PLAN~HORIZ. REINF. @ CORNERS (1 / 27)
Scale: ½"= 1'-0"

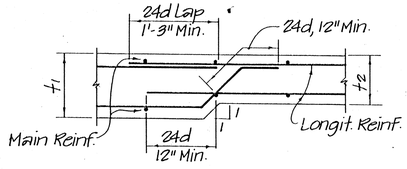

SLAB THICKNESS CHANGE (2 / 27)
N.T.S.

NOTE:

1. Provide contraction joints for Box Drain at 30'-0" o.c. max.
2. Provide expansion joints for Box Drain at 90'-0" o.c. max. and at Project Limit.
3. Transverse top and bottom reinforcement size and shape in transition section same as shown for larger of normal box drain section.
4. Longitudinal top and bottom reinforcement continuous through transition section. Place as shown on detail of larger normal box drain section.
5. See Sheet 77 for Typical Box Drain Trench Detail.

M. Finfrock 6/21/89
CHIEF, DIV. OF ENGINEERING, D.P.W. DATE

1/2"= 1'-0" 1' 0 1' 2' 3' 4' 5'
1"= 1'-0" 1' 6" 0 1' 2'
SCALE IN FEET

REVISION	DATE	BRIEF	BY	APPROVED

R. M. TOWILL CORPORATION
PLANNERS · ENGINEERS · SURVEYORS · PHOTOGRAMMETRISTS
CONSTRUCTION MANAGERS

HAWAII COMMUNITY DEVELOPMENT AUTHORITY
STATE OF HAWAII
KAKA'AKO COMMUNITY DEVELOPMENT DISTRICT
I.D. 3

DETAIL BOX DRAIN (CAST-IN-PLACE)

TIT KWONG CHUN
REGISTERED PROFESSIONAL ENGINEER
No. 2147-S
HAWAII, U.S.A.

THIS WORK WAS PREPARED BY ME OR UNDER MY SUPERVISION

Par En, Inc.
dba Park Engineering

ENGINEER: T.K.C. CHECKED BY: T.K.C.
DRAFTSMAN: R.O. DATE:
APPROVED:
EXECUTIVE DIRECTOR, HAWAII COMMUNITY DEVELOPMENT AUTHORITY

FILE	POCKET	FOLDER	NO.

AS BUILT SHEET 27 OF 117

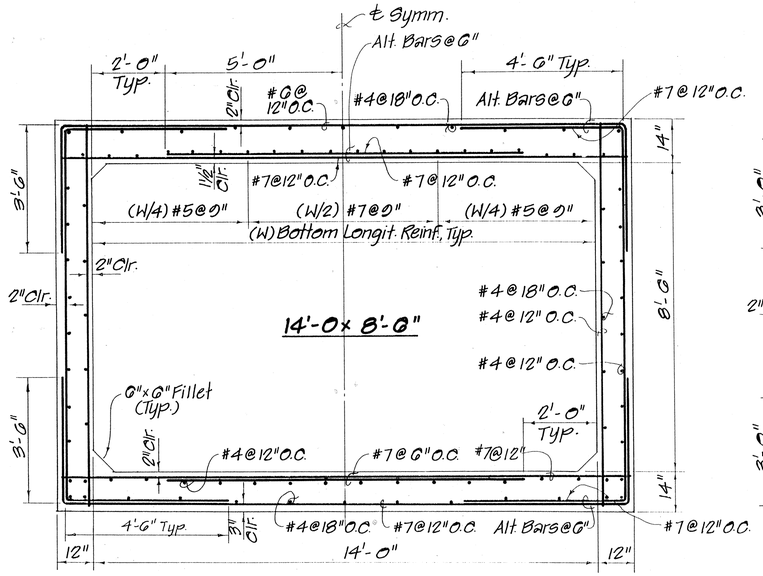

SECTION A
Scale: ½" = 1'-0"

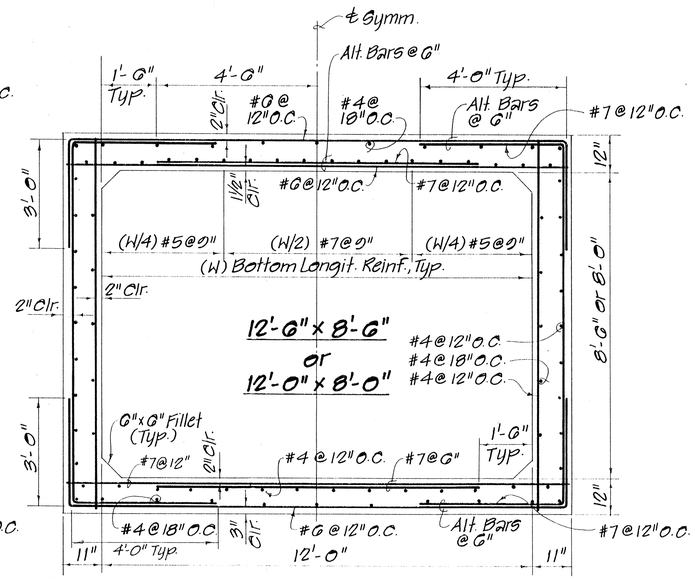

SECTION B
Scale: ½" = 1'-0"

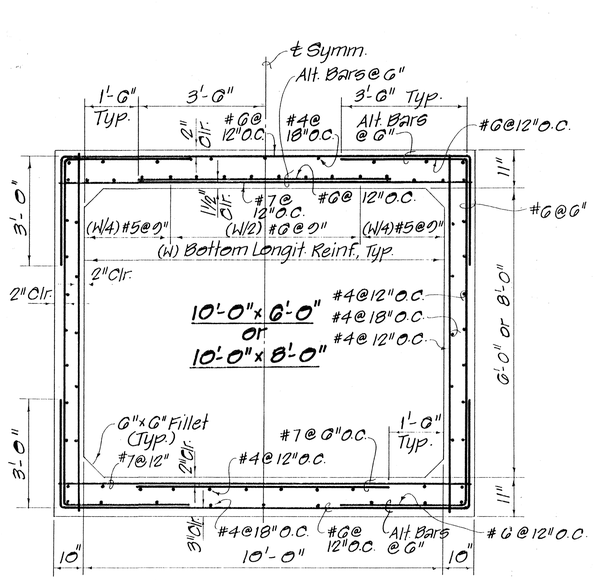

SECTION C
Scale: ½" = 1'-0"

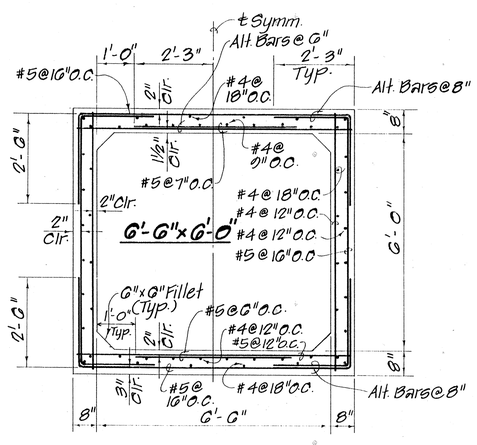

SECTION D
Scale: ½" = 1'-0"

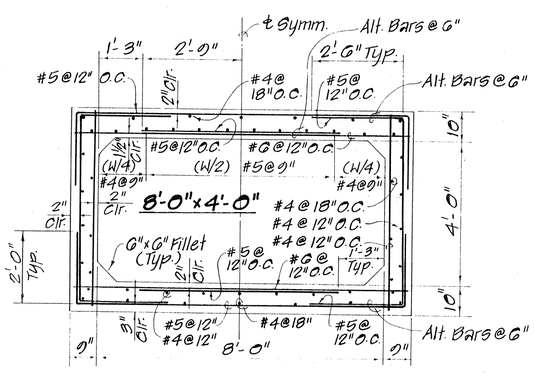

SECTION E
Scale: ½" = 1'-0"

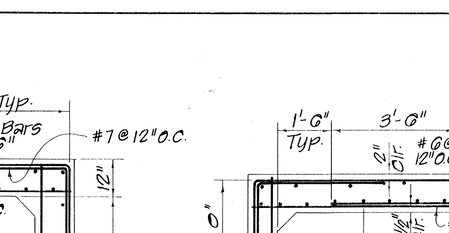

PLAN

SECTION F

GASKET DETAIL

NOTE: Gasket shall slightly squeeze out of joint to indicate proper fitting & sealing of joint. Care shall be taken to avoid foreign material from covering the surface of the gasket and the gasket from being displaced during installation.

PRECAST UNIT DETAIL
N. T. S.

NOTE:

1- Transverse top and bottom reinforcement size and shape in transition section same as shown for larger of normal box drain section.

2- Longitudinal top and bottom reinforcement continuous through transition section. Place as shown on detail of larger normal box drain section.

3- Minimum precast unit length = 5'-0"

1/2"=1'-0" 1' 0 1' 2' 3' 4' 5'

SCALE IN FEET

M. Fukagawa 6/21/89
CHIEF, DIV. OF ENGINEERING, D.P.W. DATE

REVISION	DATE	BRIEF	BY	APPROVED

R. M. TOWILL CORPORATION
PLANNERS · ENGINEERS · SURVEYORS · PHOTOGRAMMETRISTS
CONSTRUCTION MANAGERS

TIT KWONG CHUN
REGISTERED PROFESSIONAL ENGINEER
No. 2147-S
HAWAII, U.S.A.

Par En, Inc.
dba Park Engineering

HAWAII COMMUNITY DEVELOPMENT AUTHORITY
STATE OF HAWAII

KAKA'AKO COMMUNITY DEVELOPMENT DISTRICT
I.D. 3

DETAIL BOX DRAIN (PRECAST OPTION)

ENGINEER: T.K.C. CHECKED BY: T.K.C.
DRAFTSMAN: DATE:
APPROVED:
EXECUTIVE DIRECTOR, HAWAII COMMUNITY DEVELOPMENT AUTHORITY

FILE	POCKET	FOLDER	NO.

AS BUILT SHEET 27a OF 117

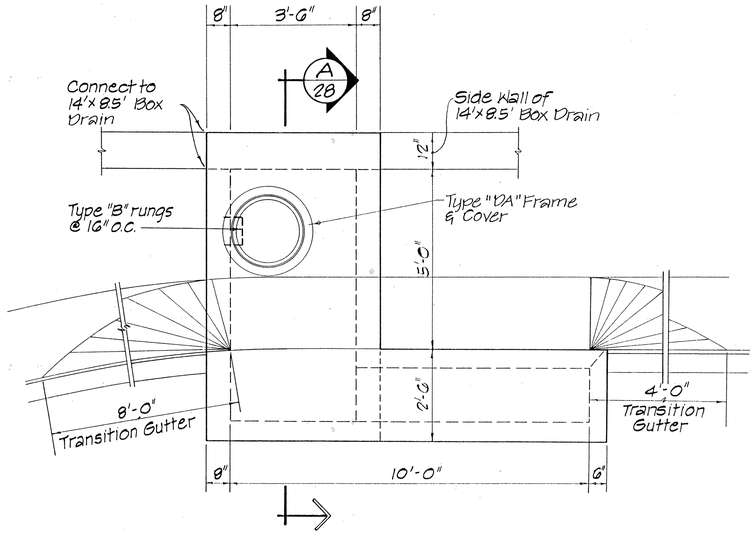

PLAN

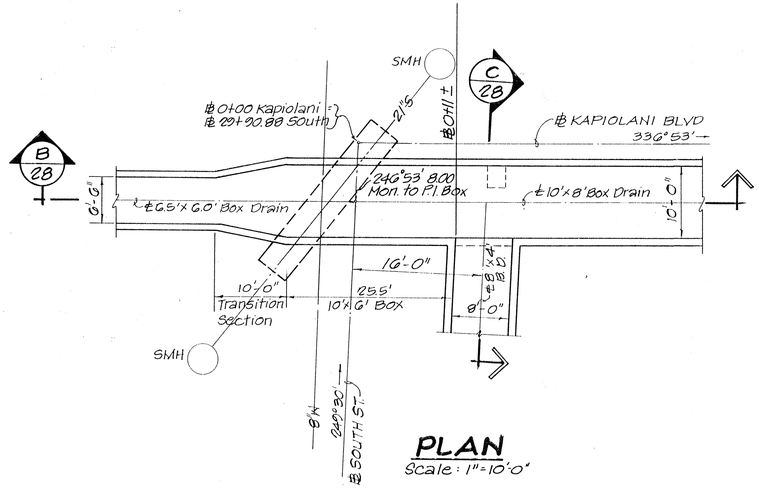

PLAN

Scale : 1"=10'-0"

NOTE:

1. Transverse top and bottom reinforcement size and shape in transition section same as shown for larger of normal box drain section.
2. Longitudinal top and bottom reinforcement continuous through transition section. Place as shown on detail of normal box drain section.

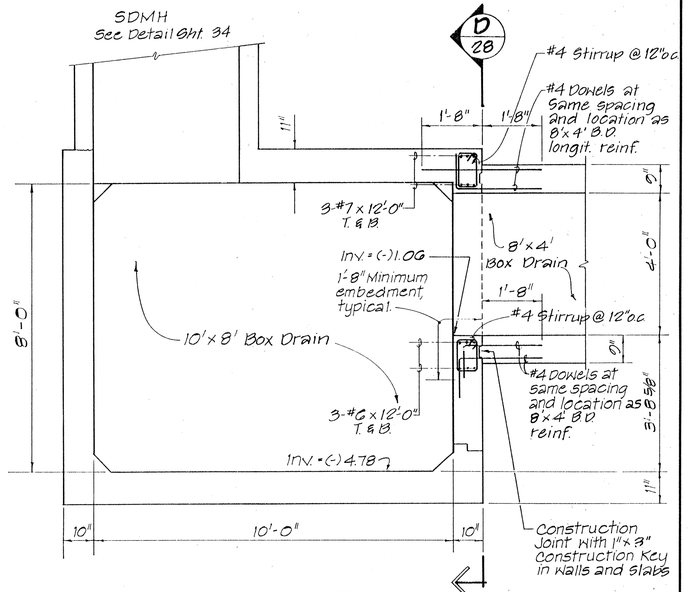

SECTION C

Scale : 1/2"=1'-0"

C
28

NOTE:
For reinf. in Box Drain, see Section C 27

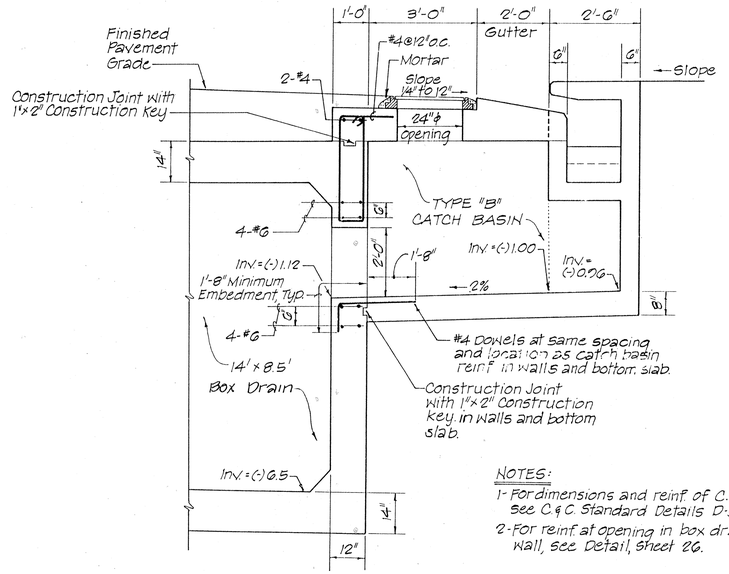

NOTES:

1- For dimensions and reinf of C.B., see C & C Standard Details D-5, D-6.

2- For reinf at opening in box drain wall, see Detail, Sheet 26.

SECTION A

28

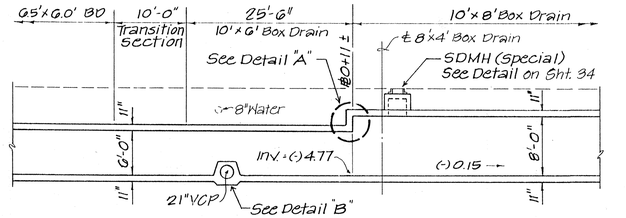

SECTION B

28

Scale : 1"=10'-0"

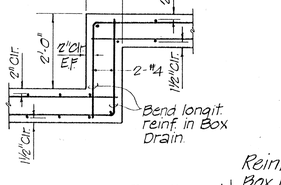

DETAIL "A"

Scale : 1/2"=1'-0"

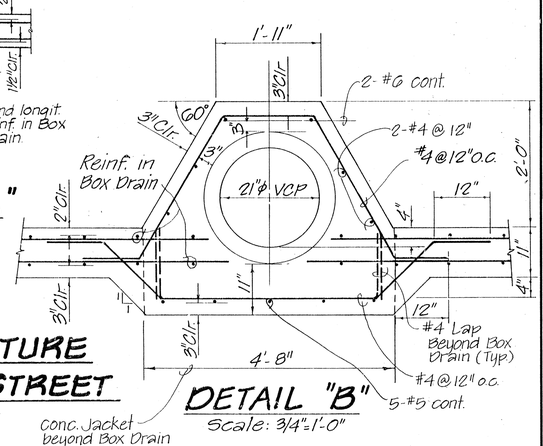

DETAIL "B"

Scale: 3/4"=1'-0"

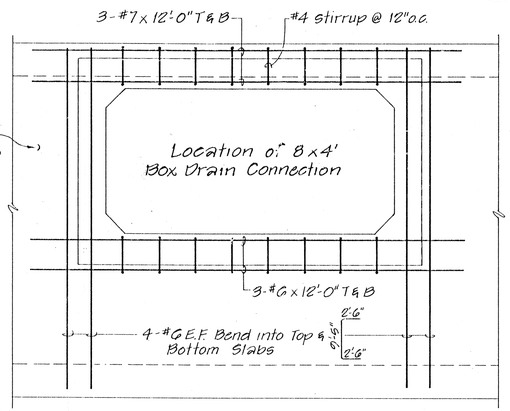

SECTION D

28

Scale 1/2"=1'-0"

DRAINAGE STRUCTURE @ ℄ 20+83± SOUTH STREET

5/6/89
CHIEF, DIV. OF W.W.M., D.P.W. DATE

M. Fukagawa 6/21/89
CHIEF, DIV. OF ENGINEERING, D.P.W. DATE

1/2" = 1'- 0" 1' 0 1' 2' 3' 4' 5'

3/4" = 1'- 0" 1' 0 1' 2' 3'

1" = 1'- 0" 1' 6' 0 1' 2'

SCALE IN FEET

REVISION	DATE	BRIEF	BY	APPROVED

R. M. TOWILL CORPORATION
PLANNERS · ENGINEERS · SURVEYORS · PHOTOGRAMMETRISTS
CONSTRUCTION MANAGERS

PAUL KAN
REGISTERED PROFESSIONAL ENGINEER
No. 3179-E
HAWAII, U.S.A.

Par En, Inc.
dba Park Engineering

HAWAII COMMUNITY DEVELOPMENT AUTHORITY
STATE OF HAWAII

KAKA'AKO COMMUNITY DEVELOPMENT DISTRICT

I.D. 3

TYPE "B" CATCH BASIN AND DRAINAGE STRUCTURE

ENGINEER: P.K. CHECKED BY: P.K.
DRAFTSMAN: A.C. DATE:
APPROVED:
EXECUTIVE DIRECTOR, HAWAII COMMUNITY DEVELOPMENT AUTHORITY

FILE	POCKET	FOLDER	NO.

TYPE "B" CATCH BASIN AND DRAIN BOX CONNECTION AT ℄ 16+73.50 HALEKAUWILA ST.

Scale : 1/2" = 1'-0"

(DETAIL SIMILAR FOR ℄ 18+64 HALEKAUWILA ST.)

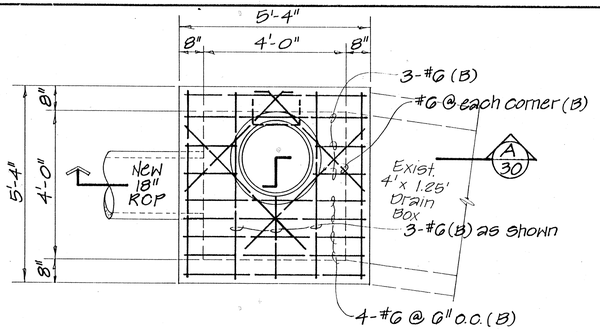

PLAN

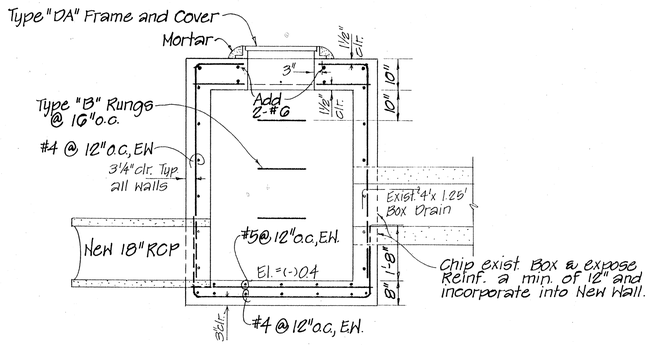

SECTION A 30

SPECIAL DRAIN MANHOLE #E-1 AT STA. 16+40 HALEKAUWILA ST.

Scale: ½" = 1'-0"

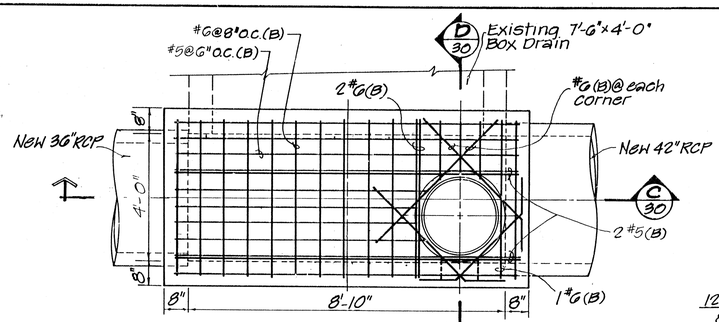

PLAN

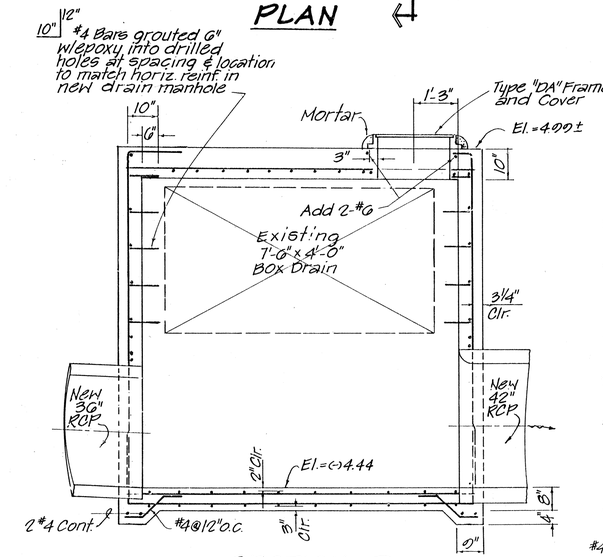

SECTION C 30

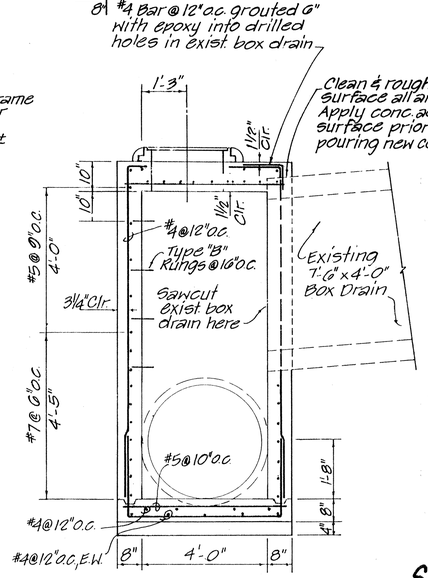

SECTION D 30

SPECIAL DRAIN MANHOLE #E-5 AT STA. 12+30 HALEKAUWILA ST.

Scale: ½" = 1'-0"

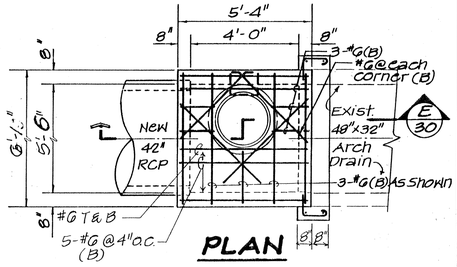

PLAN

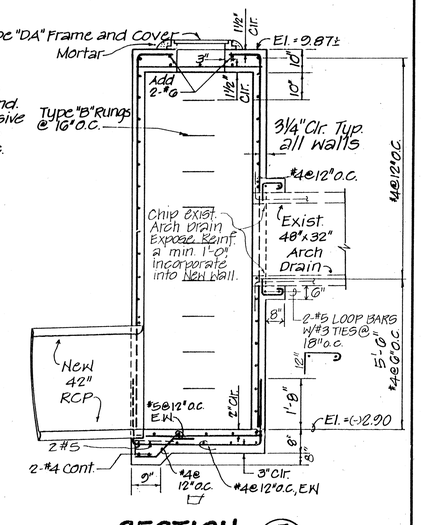

SECTION E 30

SPECIAL DRAIN MANHOLE #A-24 AT STA. 0+18 KAPIOLANI BLVD.

Scale: ⅜" = 1'-0"

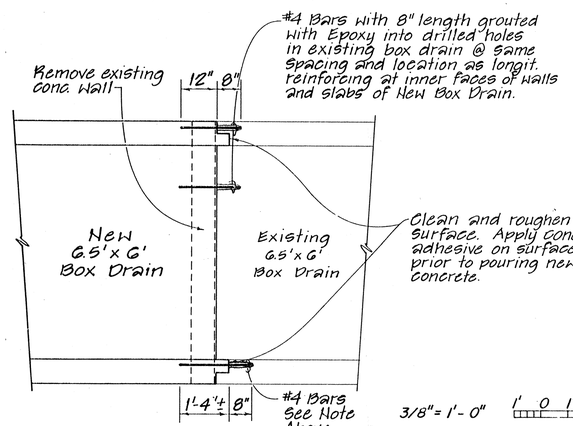

CONNECTION OF NEW 6.5' x 6' BOX DRAIN TO EXIST. BOX DRAIN AT STA. (-) 2+21.63 ± KAPIOLANI BLVD.

Scale ½" = 1'-0"

3/8" = 1'-0"
1/2" = 1'-0"
1" = 1'-0"

SCALE IN FEET

NOTES:

1. See sheet 34 for reinforcing at pipes and corners.
2. Spliced reinforcing bars shall be lapped at least 30 diameters.
3. Round opening at outlet pipe. Minimum radius 0.15 of pipe diameter.

M. Fukagawa 6/21/89
CHIEF, DIV. OF ENGINEERING, D.P.W. & DATE

REVISION	DATE	BRIEF	BY	APPROVED

R. M. TOWILL CORPORATION
PLANNERS · ENGINEERS · SURVEYORS · PHOTOGRAMMETRISTS
CONSTRUCTION MANAGERS

HAWAII COMMUNITY DEVELOPMENT AUTHORITY
STATE OF HAWAII

KAKA'AKO COMMUNITY DEVELOPMENT DISTRICT

I.D. 3

MISCELLANEOUS DRAIN DETAILS

TIT KWONG CHUN
REGISTERED PROFESSIONAL ENGINEER
No. 2147-S
HAWAII, U.S.A.

Par En, Inc.
dba Park Engineering

ENGINEER: T.K.C. CHECKED BY: T.K.C.
DRAFTSMAN: A.M. DATE:
APPROVED:
EXECUTIVE DIRECTOR, HAWAII COMMUNITY DEVELOPMENT AUTHORITY

FILE	POCKET	FOLDER	NO.

AS BUILT SHEET 30 OF 117

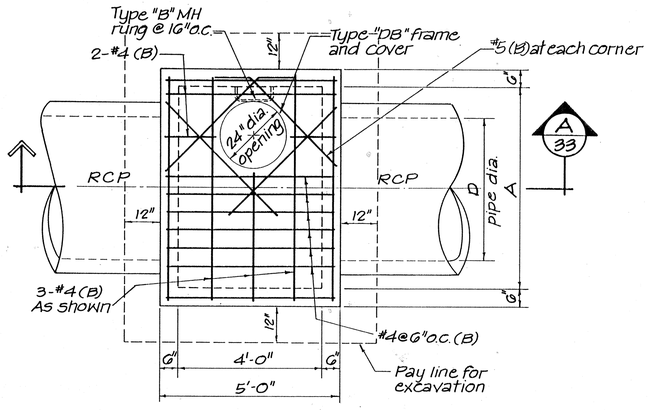

PLAN

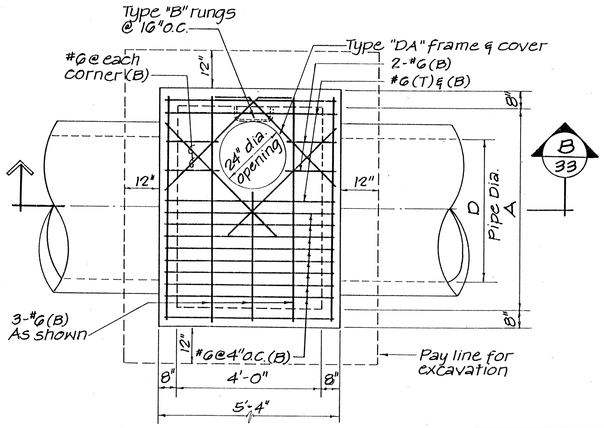

PLAN

D	A	B	C
42"	60"	2'-7"	2'-5"
48"	66"	2'-10"	2'-8"

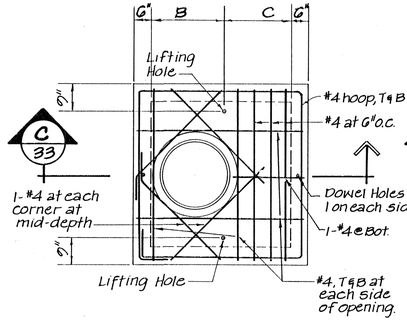

PLAN

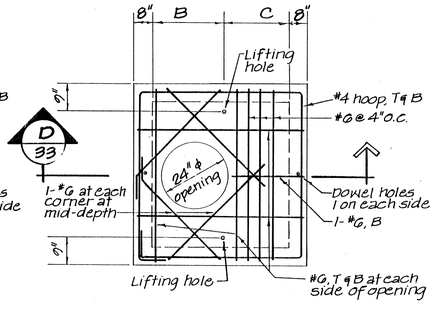

PLAN

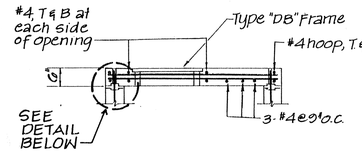

SECTION C 33

FOR SIDEWALK AREA

Scale : 1/2" = 1'-0"

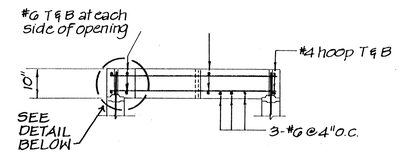

SECTION D 33

FOR PAVEMENT AREA

Scale : 1/2" = 1'-0"

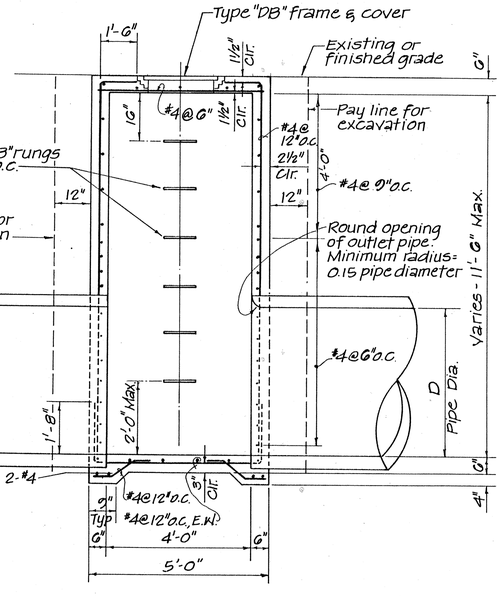

SECTION A 33

SPECIAL STORM DRAIN SHALLOW MANHOLE FOR SIDEWALK AREA

Scale : 1/2" = 1'-0"

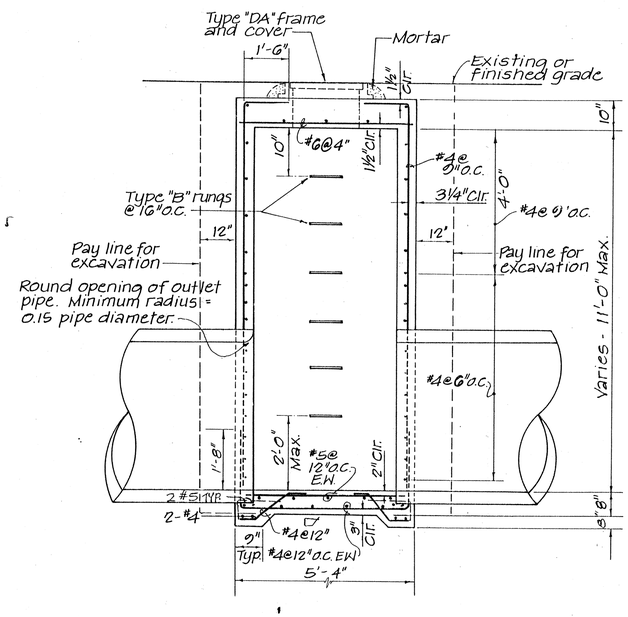

SECTION B 33

SPECIAL STORM DRAIN SHALLOW MANHOLE FOR PAVEMENT AREA

Scale : 1/2" = 1'-0"

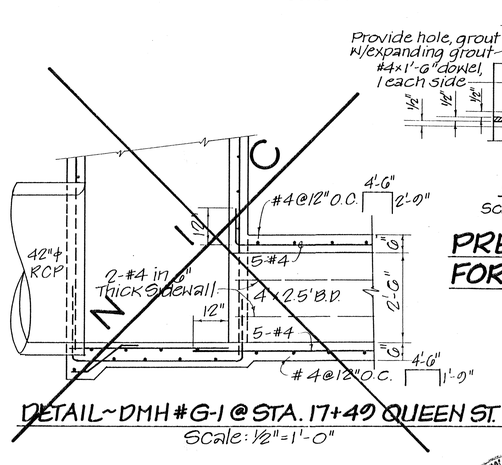

DETAIL

Scale : 1 1/2" = 1'-0"

PRE-CAST TOP SLAB FOR SHALLOW MANHOLE

DETAIL ~ DMH #G-1 @ STA. 17+49 QUEEN ST.

Scale : 1/2" = 1'-0"

Notes :

1. See sheet 34 for reinforcement at pipes and corners.
2. Spliced reinforcing bars shall be lapped at least 30 diameters.

1/2" = 1'-0" 1' 0 1' 2' 3' 4' 5'

1 1/2" = 1'-0" 1' 6" 0 1'

Scale in Feet

APPROVED: DATE:

M. Fukagawa 6/21/89

CHIEF, DIVISION OF ENGINEERING, DPW

THE KWONG CHUN REGISTERED PROFESSIONAL ENGINEER No. 2147-S HAWAII, U.S.A.

THIS WORK WAS PREPARED BY ME OR UNDER MY SUPERVISION

BY

Par En, Inc.
dba Park Engineering

REVISION	DATE	BRIEF	BY	APPROVED

R. M. TOWILL CORPORATION
PLANNERS · ENGINEERS · SURVEYORS · PHOTOGRAMMETRISTS
CONSTRUCTION MANAGERS

HAWAII COMMUNITY DEVELOPMENT AUTHORITY
STATE OF HAWAII
KAKA'AKO COMMUNITY DEVELOPMENT DISTRICT
I.D. 3

SPECIAL STORM DRAIN SHALLOW MANHOLE FOR SIDEWALK AND PAVEMENT AREAS

ENGINEER: T.K.C. CHECKED BY T.K.C.
DRAFTSMAN: A.F. DATE:
APPROVED: DATE:
EXECUTIVE DIRECTOR, HAWAII COMMUNITY DEVELOPMENT AUTHORITY

AS BUILT SHEET 33 OF 117

FILE	POCKET	FOLDER	NO.

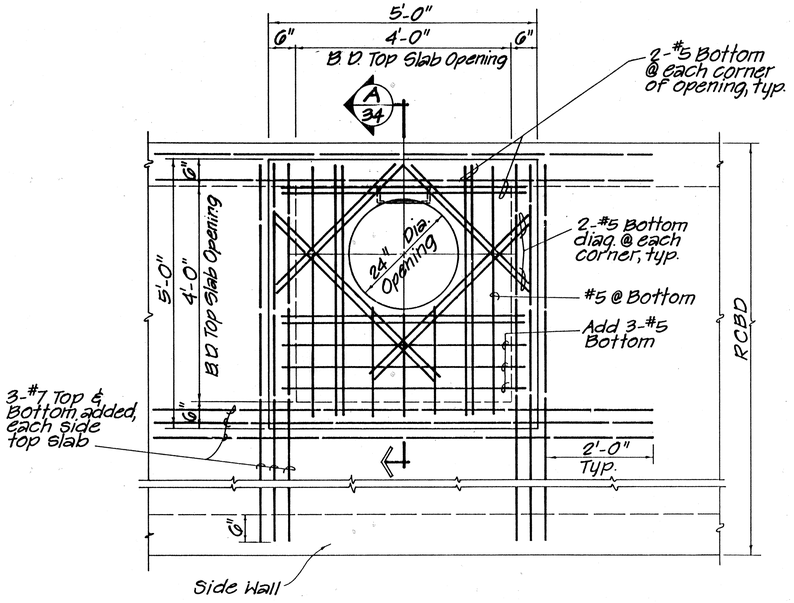

PLAN

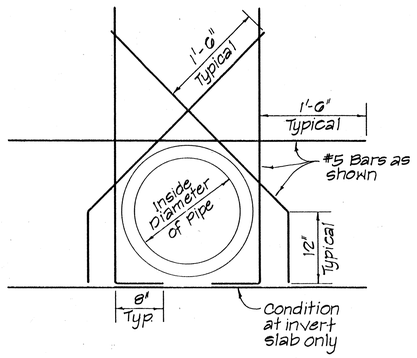

NOTE:
1" clearance between pipe and steel.

TYPICAL REINFORCEMENT AT PIPES

Scale : 1" = 1'-0"

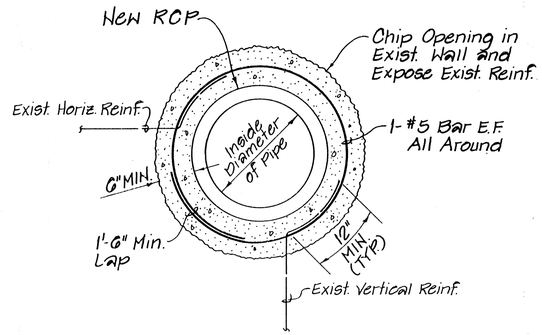

CONNECTION DETAIL TO EXISTING DRAIN MANHOLE

Scale : 1" = 1'-0"

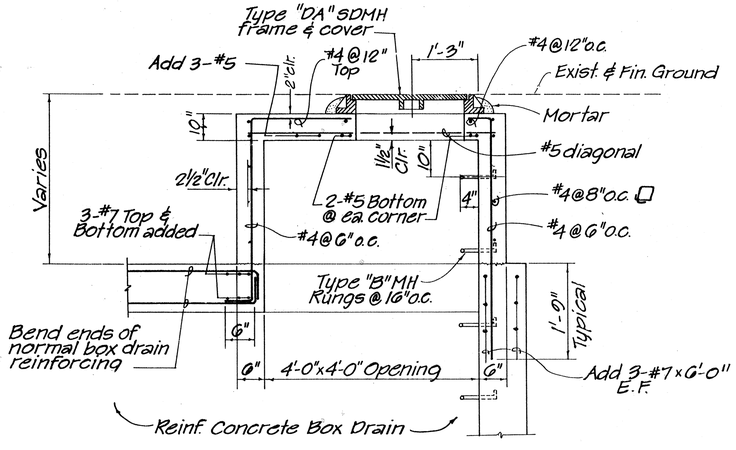

SECTION A/34

SPECIAL SDMH DETAIL

Scale : 3/4" = 1'-0"

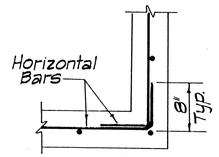

TYPICAL CORNER REINFORCEMENT LAPPING

Scale : 1" = 1'-0"

3/4" = 1'-0" 1' 0 1' 2' 3'

1" = 1'-0" 1' 0 1' 2'

Scale in Feet

REVISION	DATE	BRIEF	BY	APPROVED

R. M. TOWILL CORPORATION
PLANNERS · ENGINEERS · SURVEYORS · PHOTOGRAMMETRISTS
CONSTRUCTION MANAGERS

TIT KWONG CHUN
REGISTERED PROFESSIONAL ENGINEER
No. 2147-S
HAWAII, U.S.A.

I HEREBY CERTIFY THAT THIS PLAN WAS PREPARED BY ME OR UNDER MY SUPERVISION

Par En, Inc.
dba Park Engineering

APPROVED: DATE:

CHIEF, DIVISION OF ENGINEERING, DPW

HAWAII COMMUNITY DEVELOPMENT AUTHORITY
STATE OF HAWAII

KAKA'AKO COMMUNITY DEVELOPMENT DISTRICT

I.D. 3

SPECIAL SDMH DETAIL AND MISC. DETAILS

ENGINEER: T.K.C. CHECKED BY: T.K.C.
DRAFTSMAN: KM DATE:
APPROVED:
EXECUTIVE DIRECTOR, HAWAII COMMUNITY DEVELOPMENT AUTHORITY

	POCKET	FOLDER	NO.

AS BUILT SHEET 34 OF 117

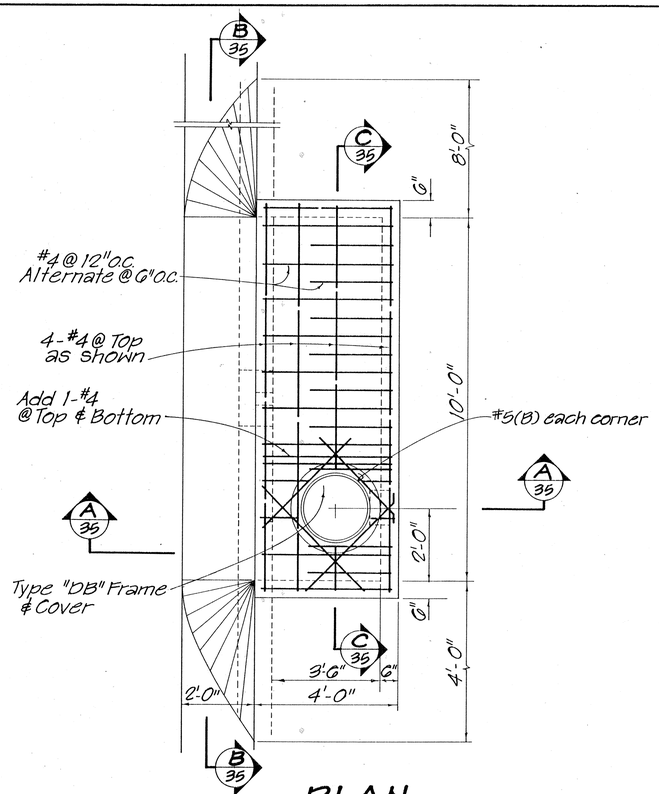

PLAN

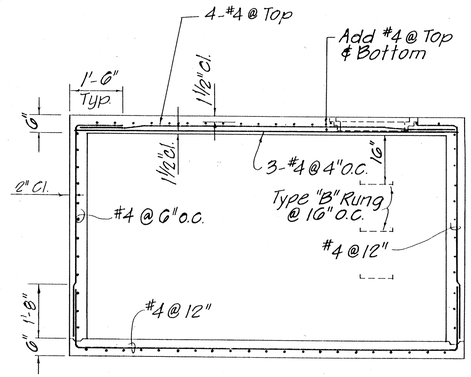

SECTION C 35

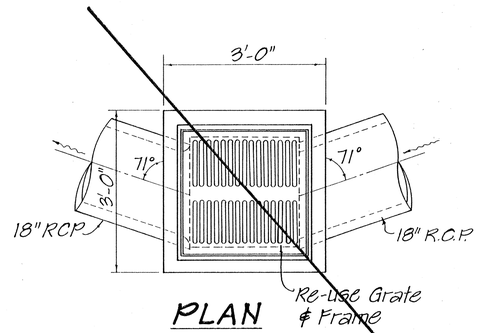

PLAN

NOTE:

Demolish existing C.B. (5 ft. away) and Salvage C.I. Grate and Frame.

Existing Grate and Frame shall be cleaned and Paint with 1-coat of rust-proof paint and 1-coat of Black color metal paint.

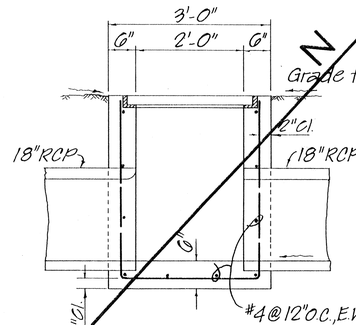

SECTION

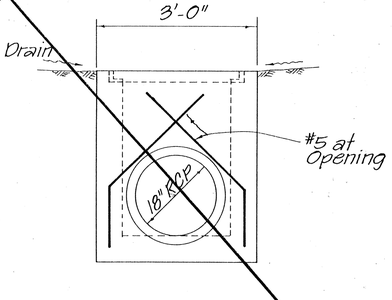

SIDE ELEVATION

GRATED C.B.

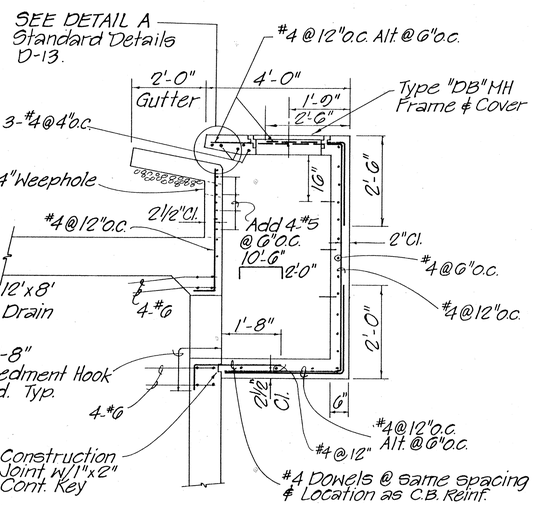

SECTION A 35

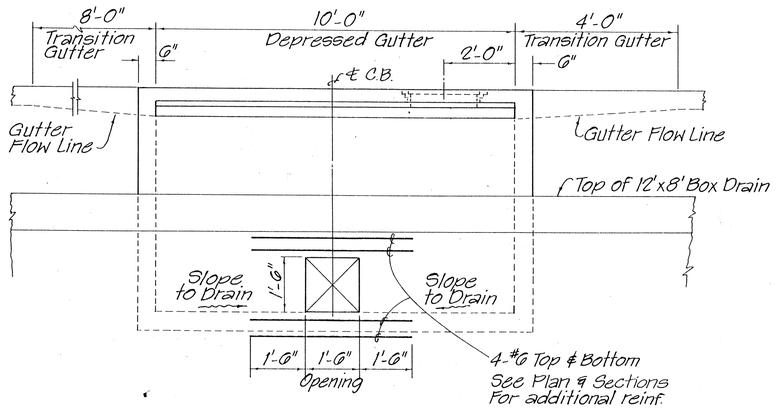

SECTION B 35

SPECIAL TYPE "C" CB #A-22

AT STA. 24+02 COOKE STREET

Scale: 1/2"=1'-0"

M. Fukagawa 6/21/89
CHIEF, DIV. OF ENGINEERING, D.P.W. (C) DATE

TIT KWONG CHUN
REGISTERED PROFESSIONAL ENGINEER
No. 2147-S
HAWAII, U.S.A.

3/4"= 1'-0" 1' 0' 1' 2' 3'

1/2"= 1'-0" 1' 0 1' 2' 3' 4' 5'

SCALE IN FEET

REVISION	DATE	BRIEF	BY	APPROVED

R. M. TOWILL CORPORATION
PLANNERS · ENGINEERS · SURVEYORS · PHOTOGRAMMETRISTS
CONSTRUCTION MANAGERS

HAWAII COMMUNITY DEVELOPMENT AUTHORITY
STATE OF HAWAII
KAKA'AKO COMMUNITY DEVELOPMENT DISTRICT
I.D. 3

STRUCTURAL DETAILS

THIS WORK WAS PREPARED BY ME OR UNDER MY SUPERVISION

By: [signature]

Par En, Inc.
dba Park Engineering

ENGINEER: T.K.C. CHECKED BY: T.K.C.
DRAFTSMAN: RM DATE:
APPROVED:
EXECUTIVE DIRECTOR, HAWAII COMMUNITY DEVELOPMENT AUTHORITY

AS BUILT

FILE	POCKET	FOLDER	NO.

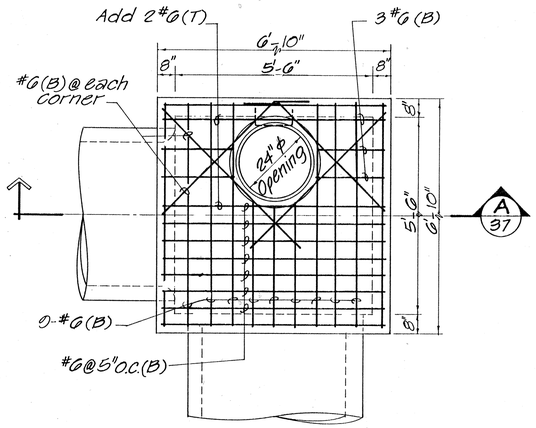

PLAN

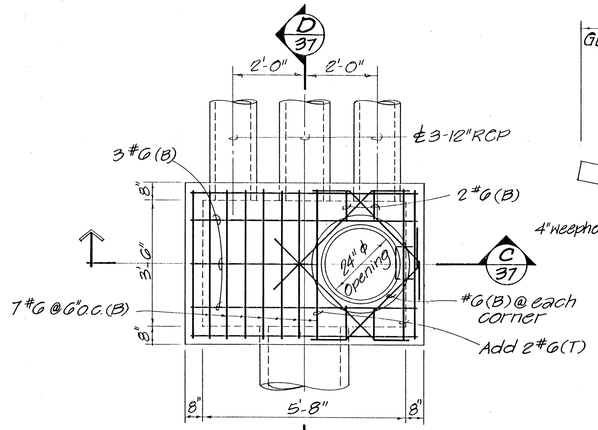

PLAN

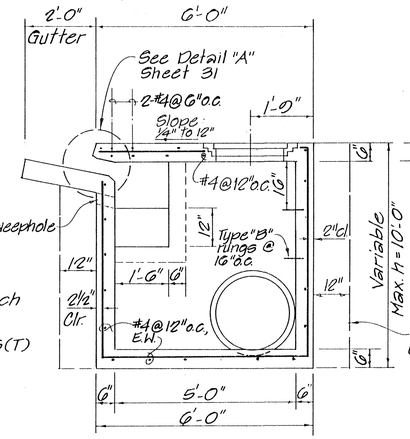

SECTION F 37

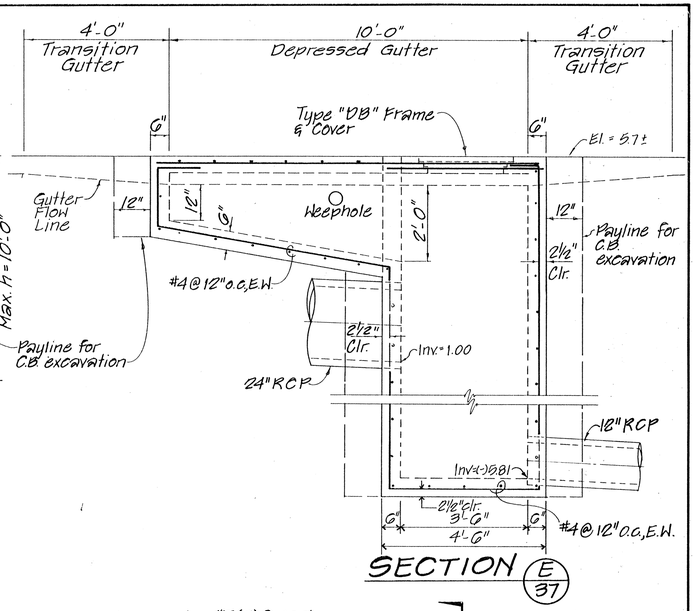

SECTION E 37

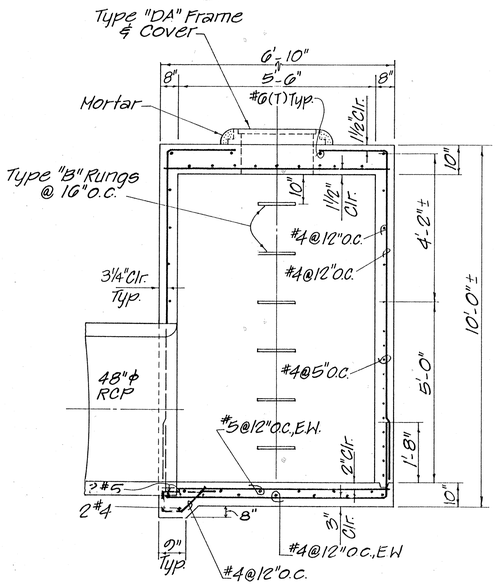

SECTION A 37

SPECIAL DRAIN MANHOLE #E-2
AT 16+13 HALEKAUWILA ST.
Scale: 1/2"=1'-0"

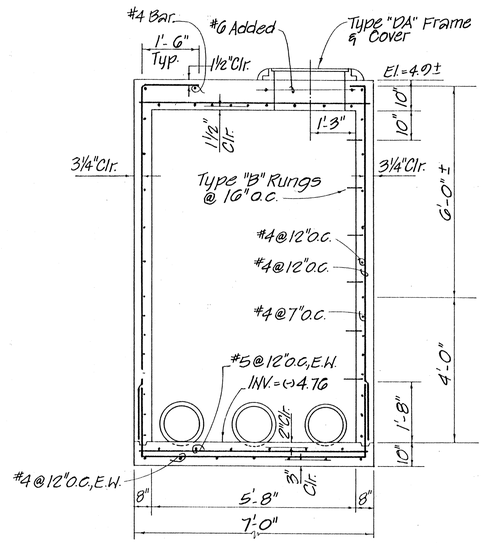

SECTION C 37

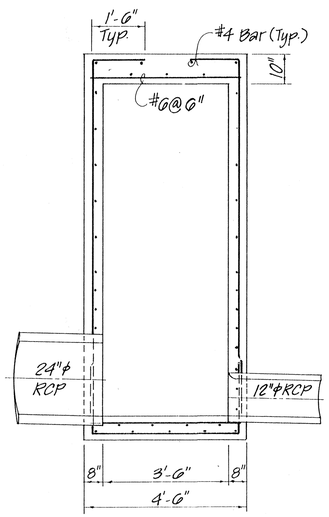

SECTION D 37

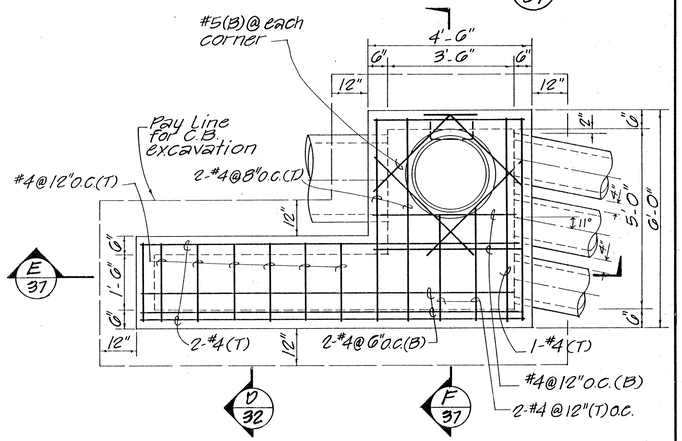

PLAN
MODIFIED TYPE "A" CATCH BASIN #A-14
AT 18+33 QUEEN ST.
Scale: 1/2"=1'-0"

SPECIAL DRAIN MANHOLE #A-16a
AT 9+07 KAWAIAHAO ST.
Scale: 1/2"=1'-0"

APPROVED: DATE:
M. Fukagawa 6/21/89
CHIEF, DIVISION OF ENGINEERING, D.P.W.

1/2"=1'-0" 1' 0' 1' 2' 3' 4' 5'
SCALE IN FEET

REVISION	DATE	BRIEF	BY	APPROVED

R. M. TOWILL CORPORATION
PLANNERS · ENGINEERS · SURVEYORS · PHOTOGRAMMETRISTS
CONSTRUCTION MANAGERS

HAWAII COMMUNITY DEVELOPMENT AUTHORITY
STATE OF HAWAII
KAKA'AKO COMMUNITY DEVELOPMENT DISTRICT
I.D. 3

DRAINAGE DETAILS

TIT KWONG CHUN
REGISTERED PROFESSIONAL ENGINEER
No. 2147-S
HAWAII, U.S.A.

Par En, Inc.
dba Park Engineering

ENGINEER: PK, FKO CHECKED BY: CCS
DRAFTSMAN: RM DWG:
APPROVED:
EXECUTIVE DIRECTOR, HAWAII COMMUNITY DEVELOPMENT AUTHORITY

FILE	POCKET	FOLDER	NO.

AS BUILT SHEET 37 OF 117

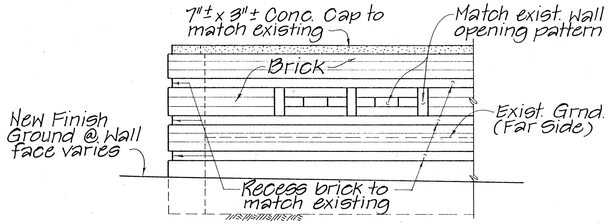

ELEVATION
Scale: 1/2"=1'-0"

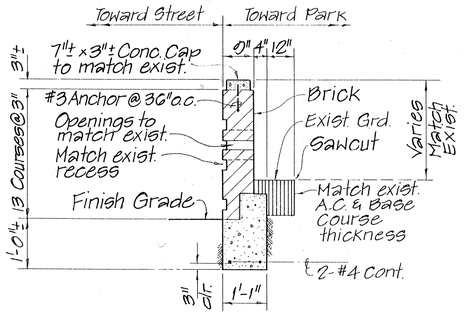

TYPICAL SECTION
Not to Scale

38

RELOCATED BRICK WALL DETAILS

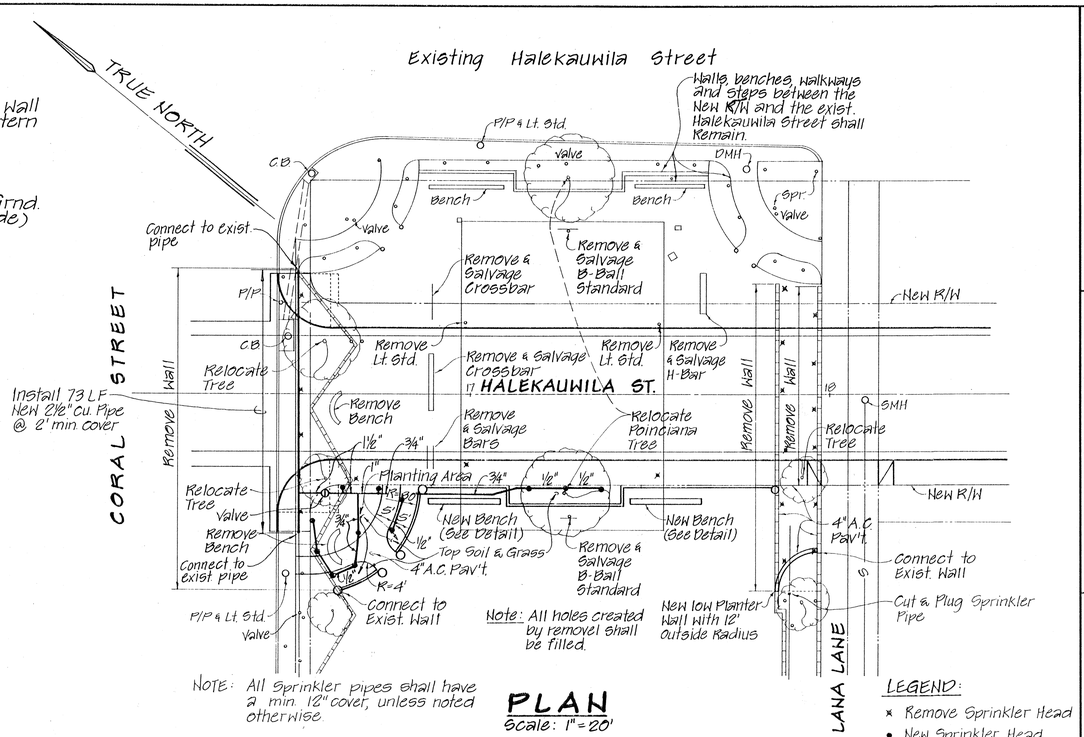

NOTE: All Sprinkler pipes shall have a min. 12" cover, unless noted otherwise

PLAN
Scale: 1"=20'

LEGEND:
- × Remove Sprinkler Head
- • New Sprinkler Head, Rainbird Series 812 with H-12 Nozzle

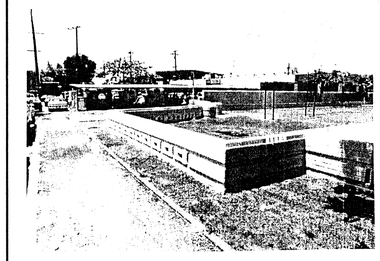

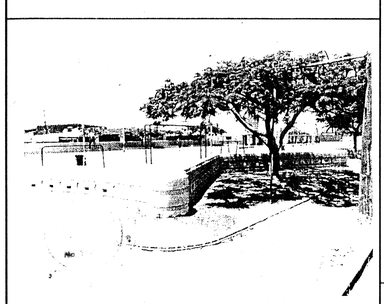

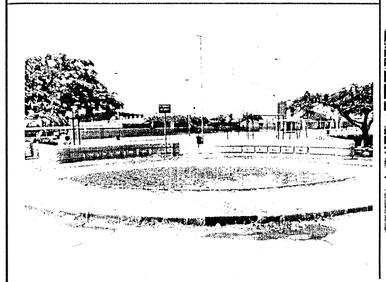

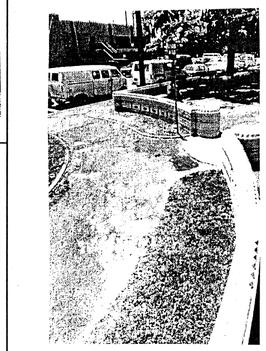

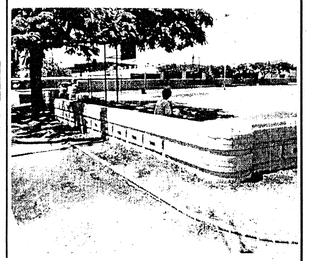

VIEW OF EXISTING WALLS

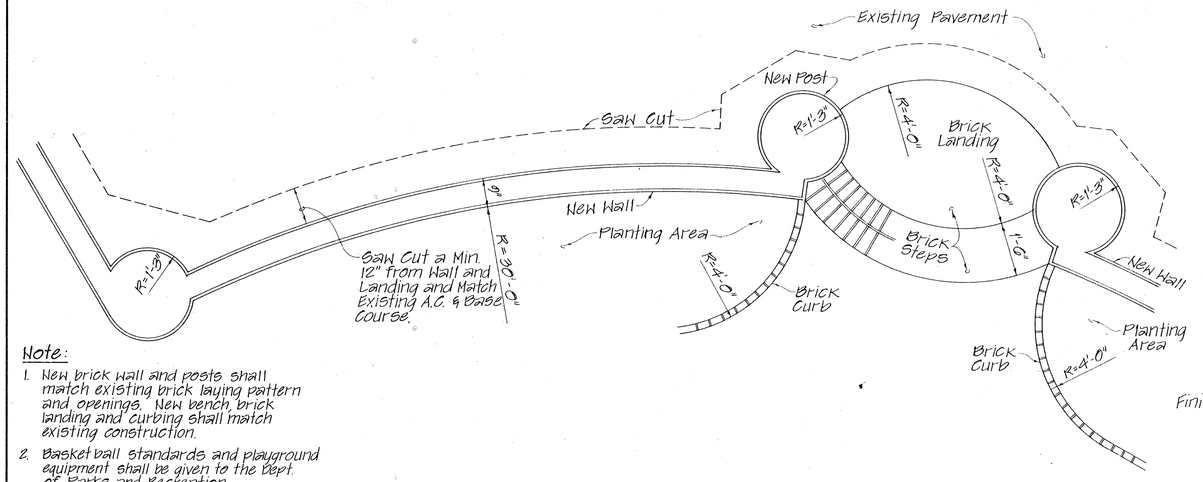

Note:
1. New brick wall and posts shall match existing brick laying pattern and openings. New bench, brick landing and curbing shall match existing construction.
2. Basketball standards and playground equipment shall be given to the Dept. of Parks and Recreation.

TYPICAL DETAIL PLAN OF ENTRANCE POST
Scale: 1/2"=1'-0"

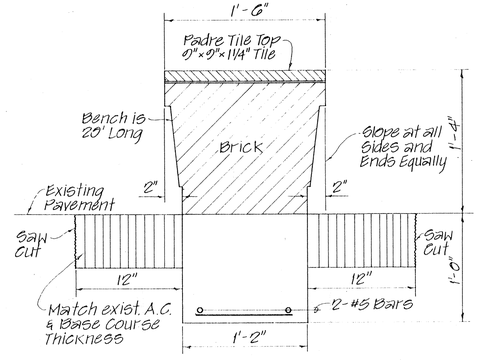

SECTION - BENCH
Scale: 1 1/2"=1'-0"

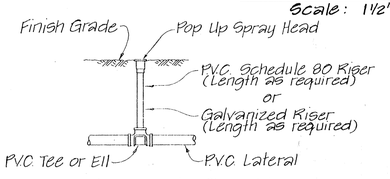

NOTE: All Pop Up Heads to be adjusted flush with Finish Grade once turf is established.

TYPICAL SPRAY HEAD DETAIL
Not to Scale

1/2"=1'-0" 1' 0' 1' 2' 3' 4' 5'
SCALE IN FEET

APPROVED: DATE

STATE HISTORIC PRESERVATION OFFICER

REVISION	DATE	BRIEF	BY	APPROVED

R. M. TOWILL CORPORATION
PLANNERS · ENGINEERS · SURVEYORS · PHOTOGRAMMETRISTS
CONSTRUCTION MANAGERS

GEORGE YOKOTA
REGISTERED PROFESSIONAL ENGINEER
No. 1156-C
HAWAII, U.S.A.

Par En, Inc.
dba Park Engineering

HAWAII COMMUNITY DEVELOPMENT AUTHORITY
STATE OF HAWAII
KAKA'AKO COMMUNITY DEVELOPMENT DISTRICT
I. D. 3

STRUCTURAL DETAILS

ENGINEER: G.Y. CHECKED BY: G.Y.
DRAFTSMAN: A.M., G.T. DATE:
APPROVED:
EXECUTIVE DIRECTOR, HAWAII COMMUNITY DEVELOPMENT AUTHORITY

FILE	POCKET	FOLDER	NO.

AS BUILT SHEET 38 OF 117

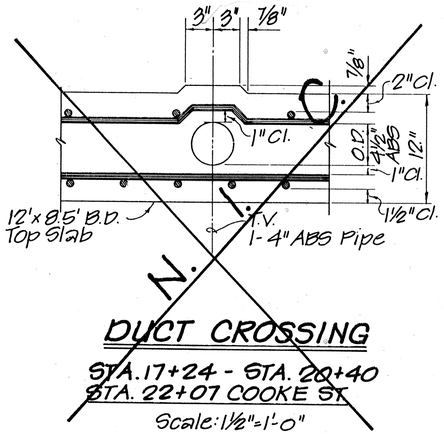

DUCT CROSSING

STA. 17+24 - STA. 20+40
STA. 22+07 COOKE ST.

Scale: 1½"=1'-0"

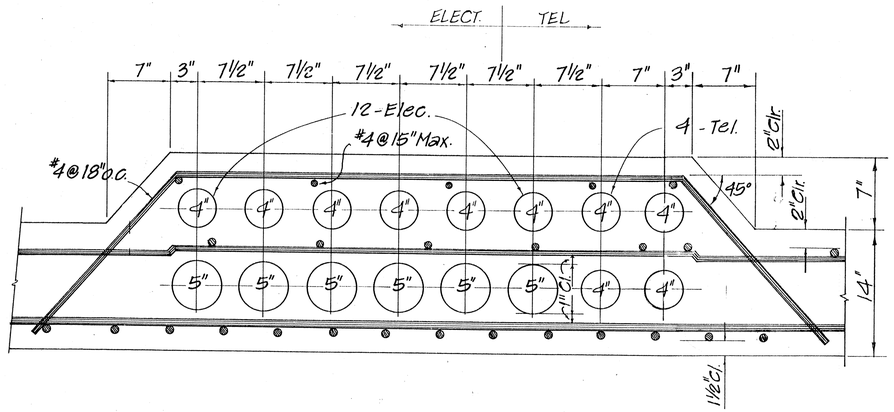

DUCT CROSSING

STA. 18+75 HALEKAUWILA ST.

Scale: 1½"=1'-0"

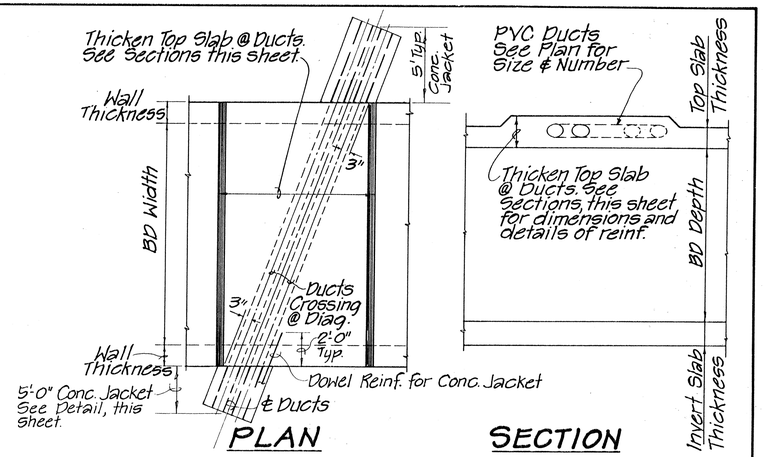

TYP. BOX DRAIN TOP SLAB THICKENING FOR DIAGONAL DUCTS CROSSING

Not to Scale

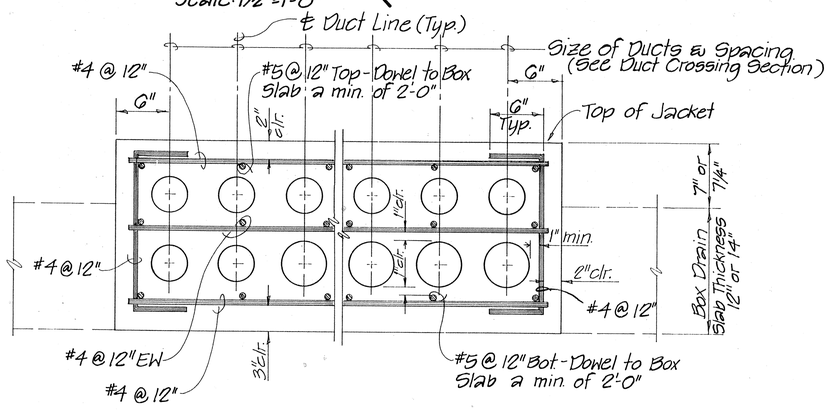

TYPICAL CONC. JACKET FOR DUCT LINE BEYOND BOX DRAIN

Scale: 1½" = 1'-0"

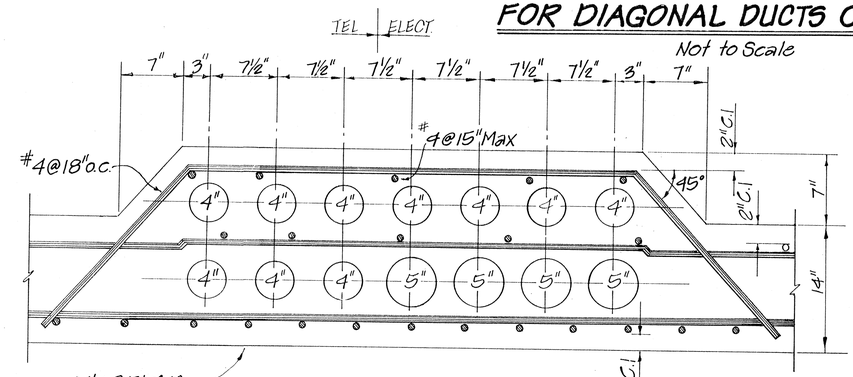

DUCT CROSSING

STA. 16+30 HALEKAUWILA ST.

Scale: 1½"=1'-0"

NOTE: All Ducts Shall be Schedule 40 PVC

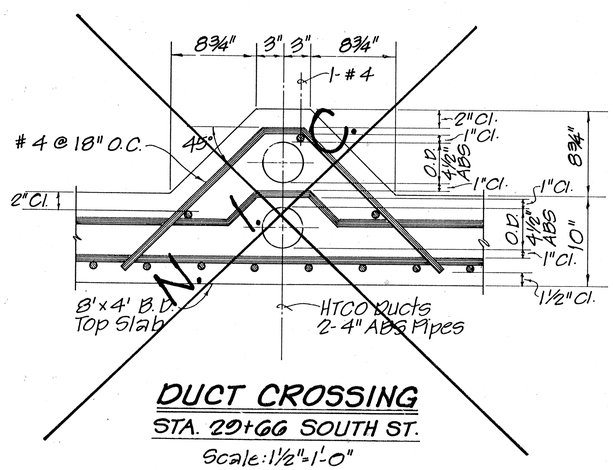

DUCT CROSSING

STA. 29+66 SOUTH ST.

Scale: 1½"=1'-0"

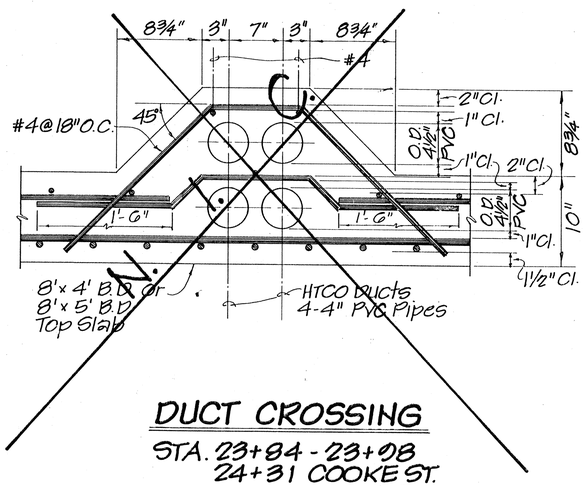

DUCT CROSSING

STA. 23+84 - 23+08
24+31 COOKE ST.

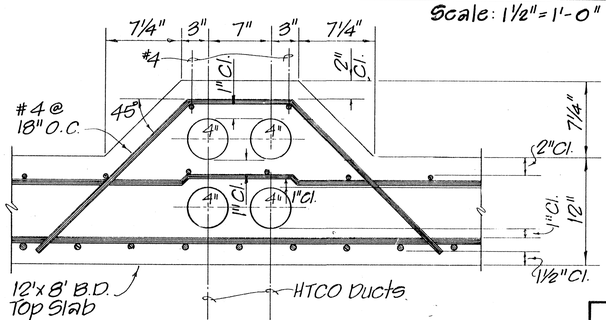

DUCT CROSSING

STA. 20+08 COOKE ST.

Scale: 1½"=1'-0"

1½" = 1'-0" 1' 6" 0 1'

SCALE IN FEET

M. Fukagawa 6/21/89
CHIEF, DIV. OF ENGINEERING, D.P.W. DATE

HAWAIIAN ELECTRIC CO., INC. DATE

HAWAIIAN TELEPHONE CO. DATE

REVISION	DATE	BRIEF	BY	APPROVED

R. M. TOWILL CORPORATION
PLANNERS · ENGINEERS · SURVEYORS · PHOTOGRAMMETRISTS
CONSTRUCTION MANAGERS

HAWAII COMMUNITY DEVELOPMENT AUTHORITY
STATE OF HAWAII

KAKA'AKO COMMUNITY DEVELOPMENT DISTRICT

I.D. 3

DETAILS
DUCT CROSSINGS
BOX DRAIN

TIT KWONG CHUN
REGISTERED PROFESSIONAL ENGINEER
No. 2147-S
HAWAII, U.S.A.

THIS WORK WAS PREPARED BY ME OR UNDER MY SUPERVISION

Par En, Inc.
dba Park Engineering

ENGINEER: T.K.C. CHECKED BY: T.K.C.
DRAFTSMAN: B.H. DATE:
APPROVED:
EXECUTIVE DIRECTOR, HAWAII COMMUNITY DEVELOPMENT AUTHORITY

FILE	POCKET	FOLDER	NO.

AS BUILT SHEET 32 OF 117

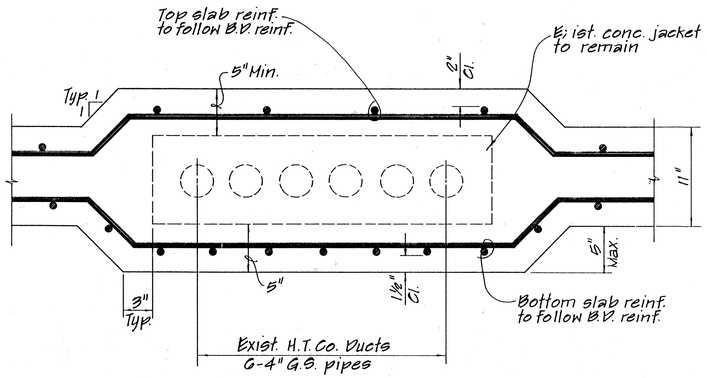

EXIST. H.T. CO. DUCTS CROSSING

10'x8' B.D. AT STA. 0+23 KAPIOLANI BLVD.

Scale: 1½" = 1'-0"

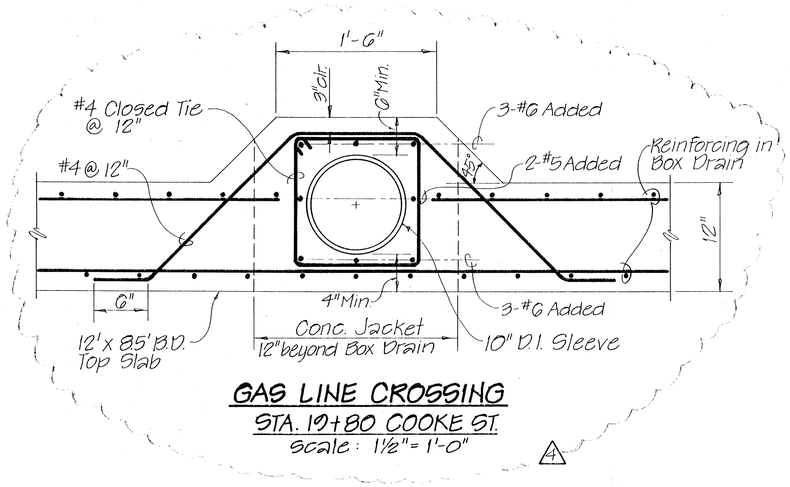

GAS LINE CROSSING

STA. 19+80 COOKE ST.

Scale: 1½" = 1'-0"

4

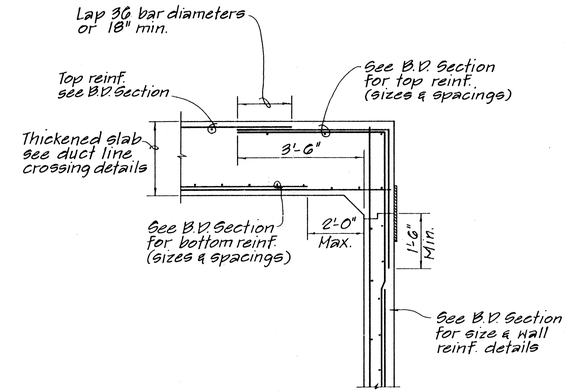

TYPICAL CORNER REINF. DETAIL

(DUCTLINE CROSSING AT B.D. WITH THICKENED SLAB)

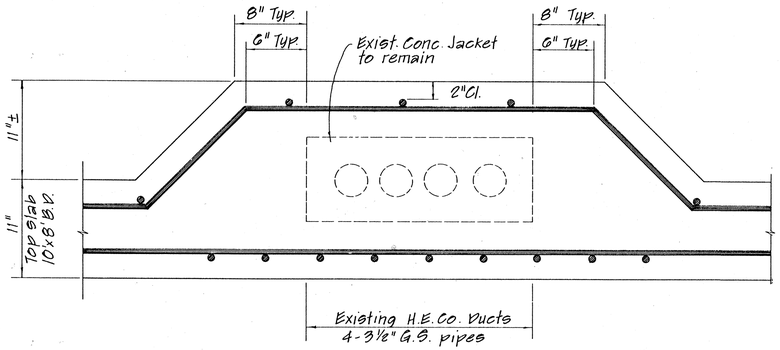

EXIST. H.E. CO. DUCTS CROSSING

10'x8' B.D. AT STA. 0+32 KAPIOLANI BLVD.

Scale: 1½" = 1'-0"

1/2" = 1'-0" 1' 0' 1' 2' 3' 4' 5'

1 1/2" = 1'-0" 1' 6" 0' 1'

SCALE IN FEET

APPROVED:

M. Fukagawa 6/21/89
CHIEF, DIV. OF ENGINEERING, D.P.W. DATE

M. Jan 1/23/90
HAWAIIAN ELECTRIC CO., INC. DATE

R. Hayes 1/4/90
HAWAIIAN TELEPHONE CO. DATE

REVISION	DATE	BRIEF	BY	APPROVED
4	10/31/90	Added Gas Line Crossing Detail	G.Y.	DOE 6/11-27-90

R. M. TOWILL CORPORATION
PLANNERS · ENGINEERS · SURVEYORS · PHOTOGRAMMETRISTS
CONSTRUCTION MANAGERS

TIT KWONG CHUN
REGISTERED PROFESSIONAL ENGINEER
No. 2147-S
HAWAII, U.S.A.

THIS WORK WAS PREPARED BY ME OR UNDER MY SUPERVISION
BY: [signature]

Par En, Inc.
dba Park Engineering

HAWAII COMMUNITY DEVELOPMENT AUTHORITY
STATE OF HAWAII

KAKA'AKO COMMUNITY DEVELOPMENT DISTRICT

I.D. 3

BOX DRAIN
DUCT LINE CROSSINGS & DETAILS

ENGINEER: T.K.C. CHECKED BY: T.K.C.
DRAFTSMAN: B.M. DATE:
APPROVED: [signature]
EXECUTIVE DIRECTOR, HAWAII COMMUNITY DEVELOPMENT AUTHORITY

FILE	POCKET	FOLDER	NO.

AS BUILT

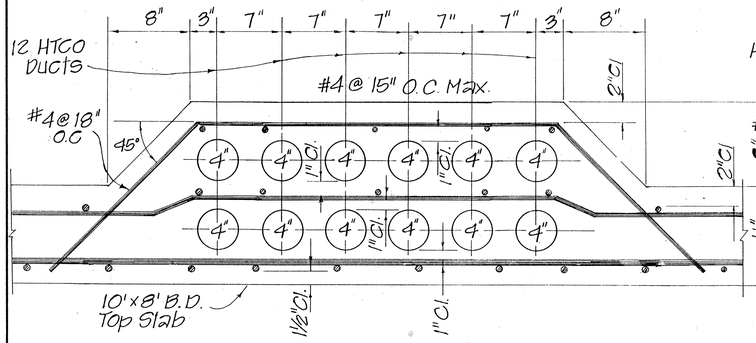

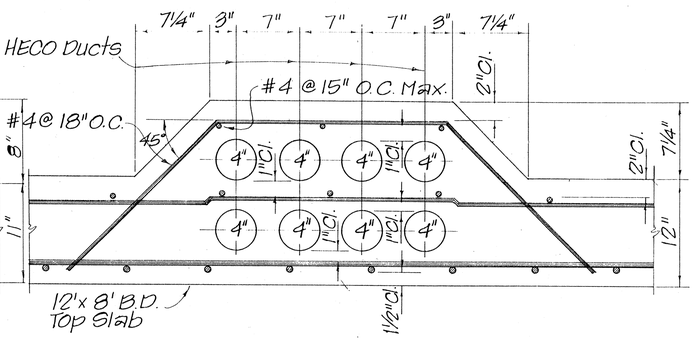

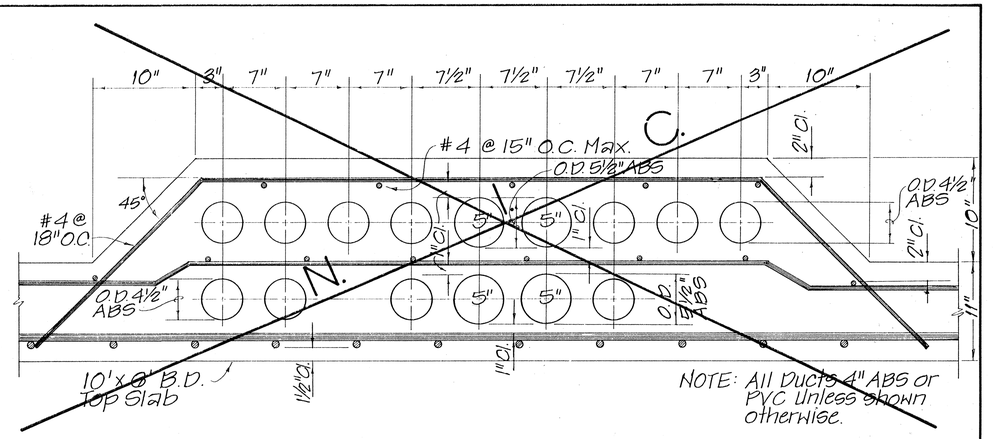

DUCT CROSSING
STA. 28+09 COOKE ST.
Scale: 1½"=1'-0"

NOTE:
All ducts shall be PVC schedule 40

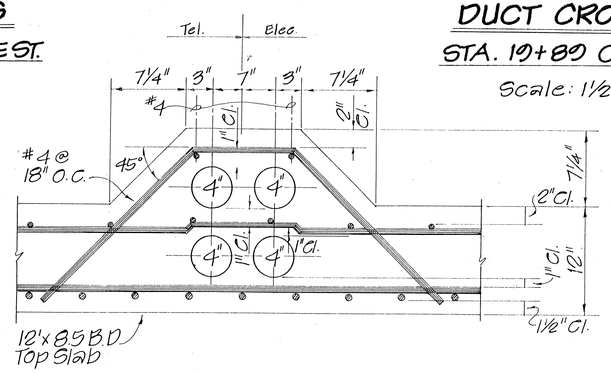

DUCT CROSSING
STA. 10+89 COOKE ST.
Scale: 1½"=1'-0"

DUCT CROSSING
STA. 13+73 SOUTH ST.
Scale: 1½"=1'-0"

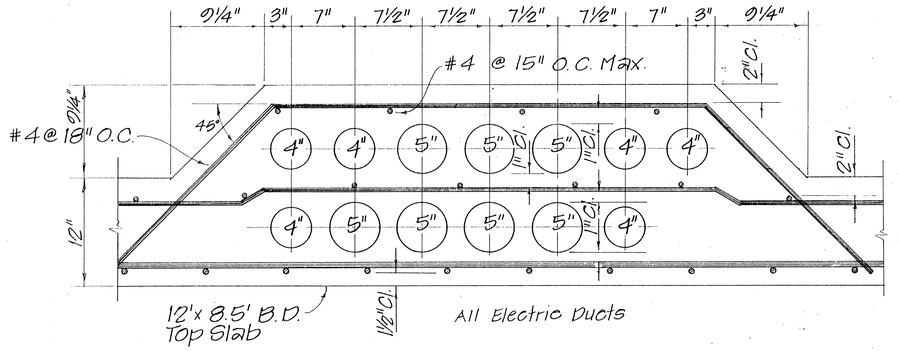

DUCT CROSSING
STA. 18+87 COOKE ST.
Scale: 1½"=1'-0"

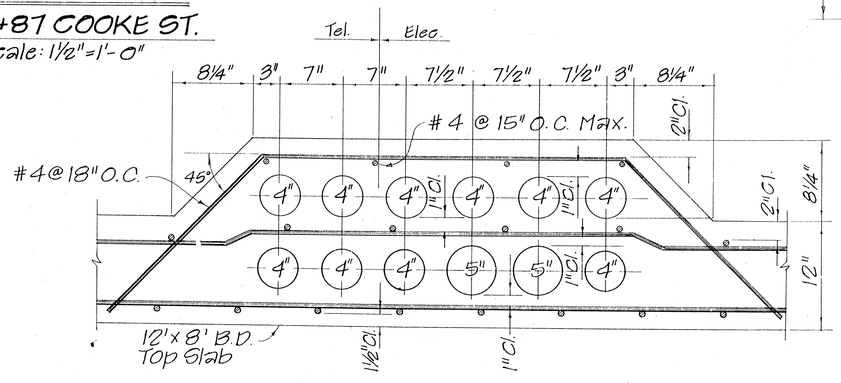

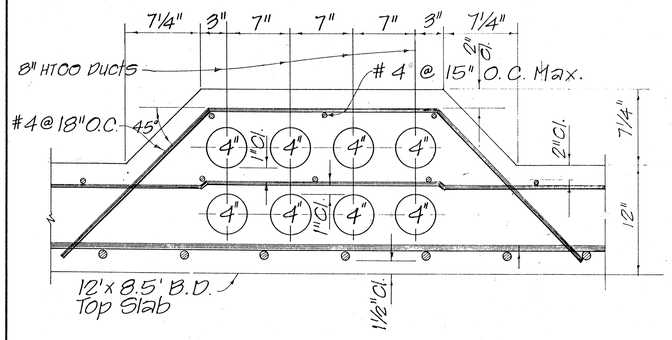

DUCT CROSSING
STA. 17+07 COOKE ST.
Scale: 1½"=1'-0"

DUCT CROSSING
STA. 17+36 COOKE ST.
Scale: 1½"=1'-0"

DUCT CROSSING
STA. 22+25 COOKE ST.
Scale: 1½"=1'-0"

1½"=1'-0" 1' 6" 0 1'
SCALE IN FEET

M. Fukuyama 6/21/89
CHIEF, DIV. OF ENGINEERING, D.P.W. DATE

M Lau 1/23/90
HAWAIIAN ELECTRIC CO., INC. DATE

R Wong 1/4/90
HAWAIIAN TELEPHONE CO. DATE

REVISION	DATE	BRIEF	BY	APPROVED

R. M. TOWILL CORPORATION
PLANNERS · ENGINEERS · SURVEYORS · PHOTOGRAMMETRISTS
CONSTRUCTION MANAGERS

Par En, Inc.
dba Park Engineering

HAWAII COMMUNITY DEVELOPMENT AUTHORITY
STATE OF HAWAII
KAKA'AKO COMMUNITY DEVELOPMENT DISTRICT
I.D. 3

DETAILS
DUCT CROSSINGS
BOX DRAIN

ENGINEER: PK CHECKED BY:
DRAFTSMAN: RC DATE:
APPROVED:
EXECUTIVE DIRECTOR, HAWAII COMMUNITY DEVELOPMENT AUTHORITY

FILE	POCKET	FOLDER	NO.

AS BUILT SHEET 41 OF 117

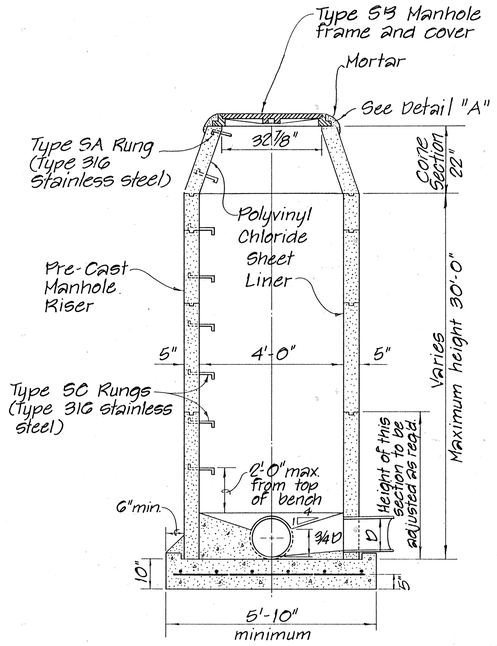

PVC LINING FOR PLAIN SMH FOR 24" V.C. PIPE

Scale: 1/2" = 1'-0"

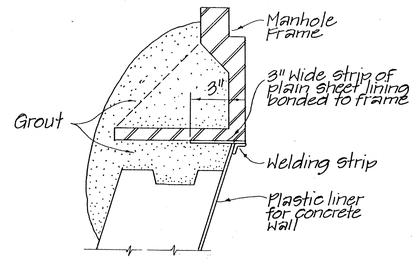

DETAIL "A"

Scale: 3" = 1'-0"

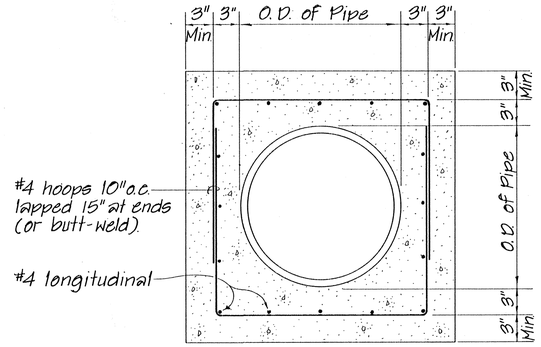

DETAIL OF CONCRETE JACKET FOR 18" AND 21" VCP SEWER

Scale: 1 1/2" = 1'-0"

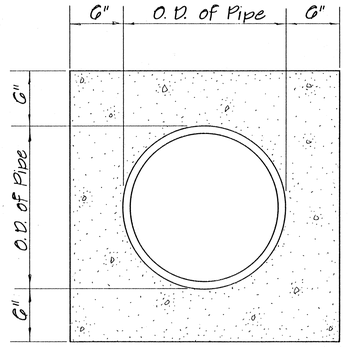

PLAIN CONCRETE JACKET FOR SEWER

Scale: 1 1/2" = 1'-0"

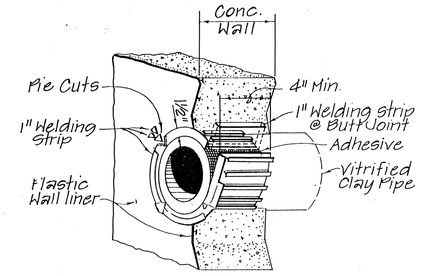

TYPICAL PLASTIC LINING DETAIL

Not to Scale

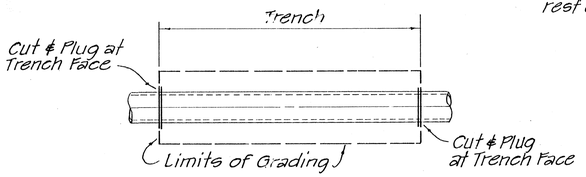

DETAIL ~ CUTTING & PLUGGING ABANDONED SEWER LINE

N.T.S.

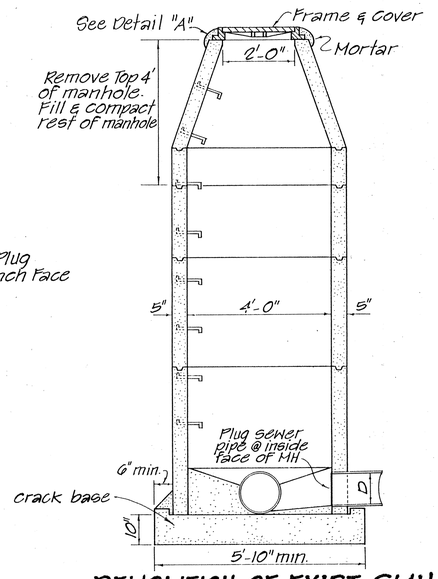

DEMOLITION OF EXIST. SMH

Scale: 1/2" = 1'-0"

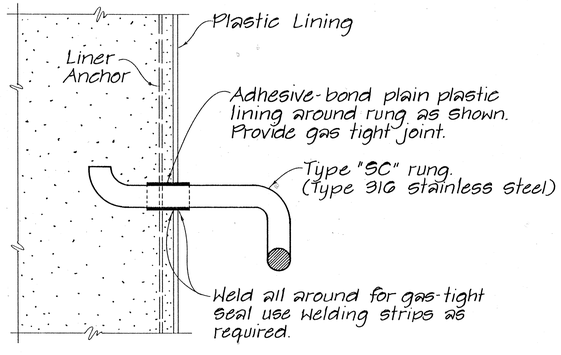

PLASTIC LINING DETAIL AT TYPE "SC" MANHOLE RUNG

Not to Scale

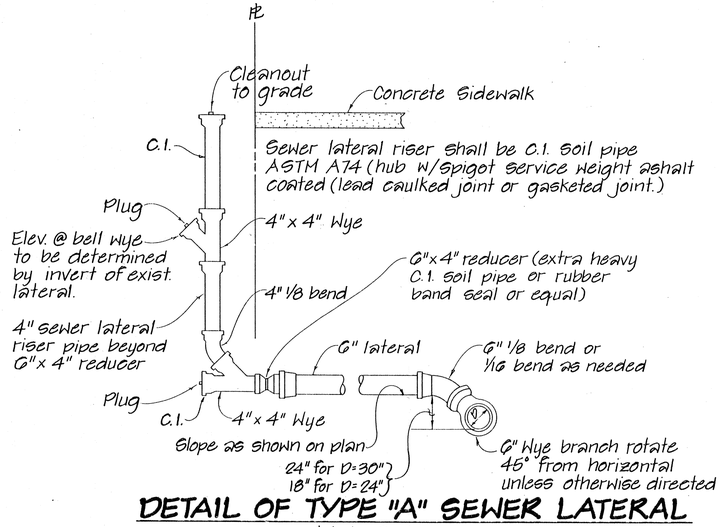

DETAIL OF TYPE "A" SEWER LATERAL

Not to Scale

5/18/80
CHIEF, DIV. OF W.W.M., D.P.W. DATE

1/2" = 1'-0" 1' 0 1' 2' 3' 4' 5'

1 1/2" = 1'-0" 1' 6" 0 1'

SCALE IN FEET

REVISION	DATE	BRIEF	BY	APPROVED

R. M. TOWILL CORPORATION
PLANNERS · ENGINEERS · SURVEYORS · PHOTOGRAMMETRISTS
CONSTRUCTION MANAGERS

GEORGE YOKOTA REGISTERED PROFESSIONAL ENGINEER No. 1156-C HAWAII, U.S.A.

THIS WORK WAS PREPARED BY ME OR UNDER MY SUPERVISION

Par En, Inc.
dba Park Engineering

HAWAII COMMUNITY DEVELOPMENT AUTHORITY
STATE OF HAWAII

KAKA'AKO COMMUNITY DEVELOPMENT DISTRICT

I.D. 3

SEWER MANHOLE AND MISCELLANEOUS DETAILS

ENGINEER: CO CHECKED BY: G.Y.
DRAFTSMAN: CM DATE:
APPROVED:
EXECUTIVE DIRECTOR, HAWAII COMMUNITY DEVELOPMENT AUTHORITY

FILE	POCKET	FOLDER	NO.

AS BUILT SHEET 42 OF 117

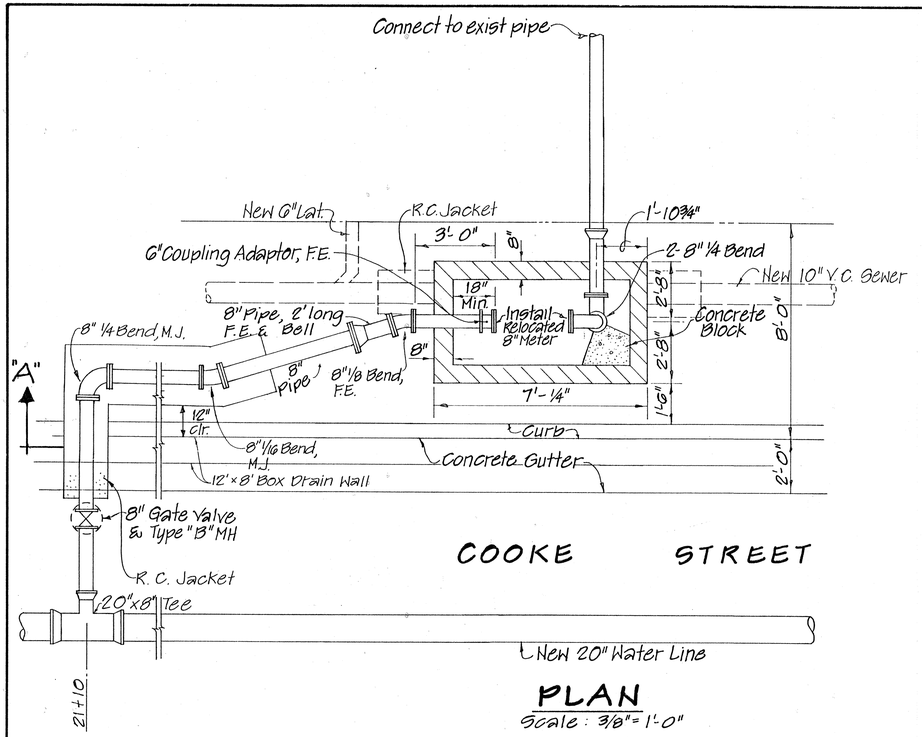

PLAN
Scale : 3/8"= 1'-0"

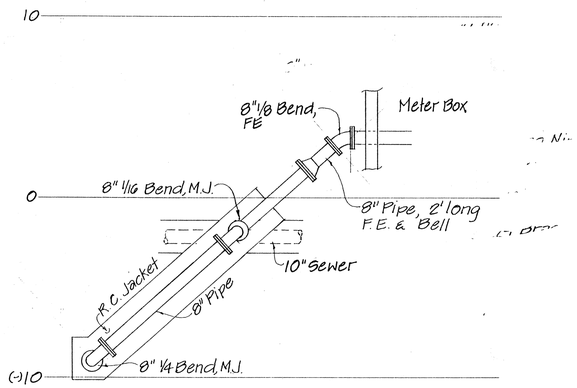

SECTION "A"
Scale : ¼" = 1'-0"

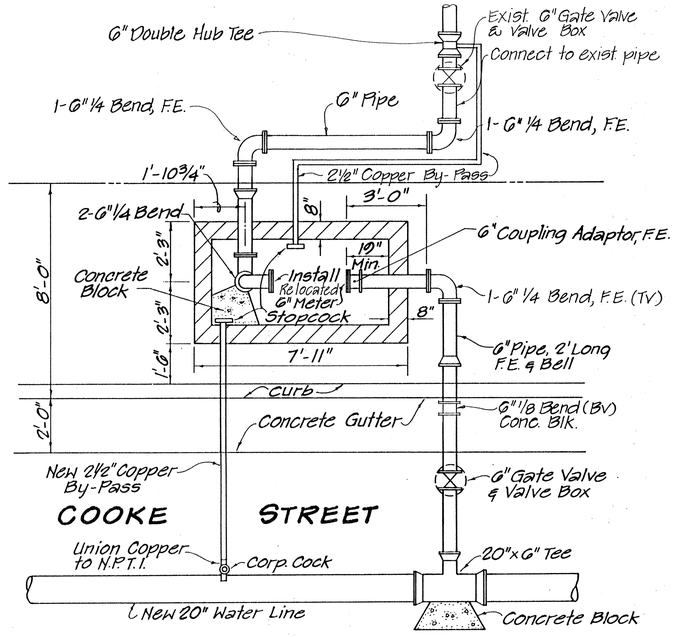

PLAN
Scale: 3/8"=1'-0"

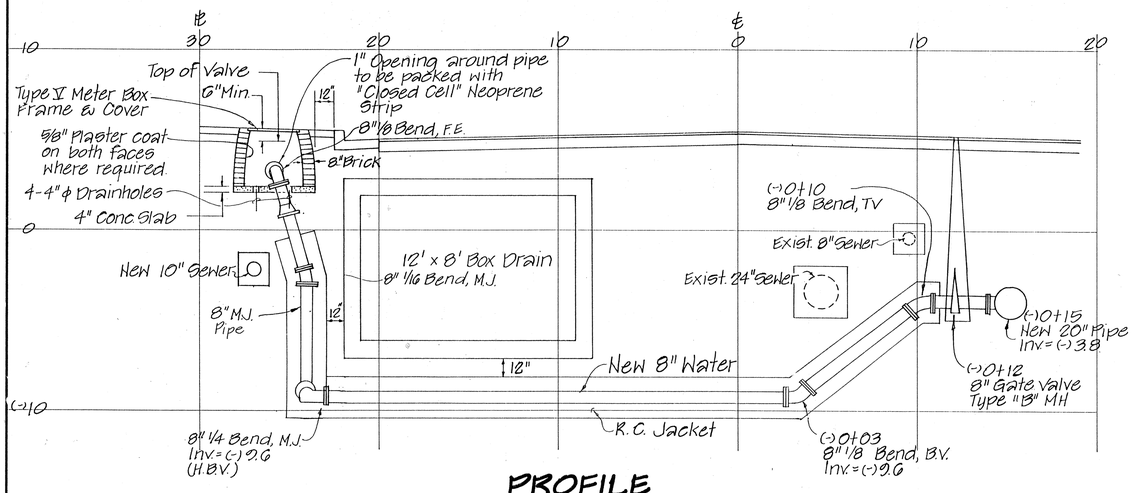

PROFILE
scale : ¼"=1'-0"

8" D.C. METER CONNECTION
STA. 21+10 COOKE STREET
(Sheet 13)

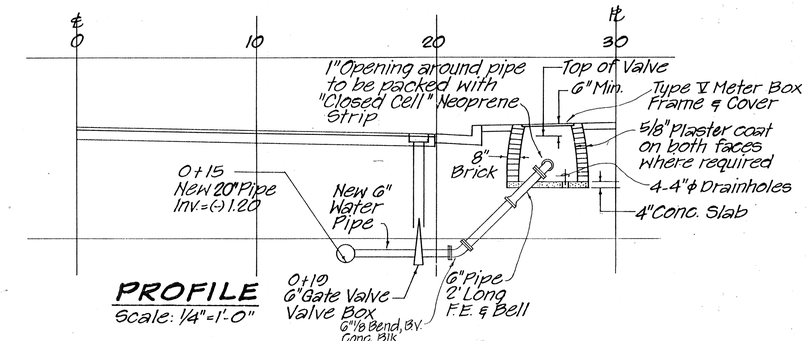

PROFILE
Scale: ¼"=1'-0"

6" COMPOUND METER CONNECTION
STA. 25+70 COOKE STREET
Scale: As Shown
(Sheet 14)

for CHIEF, PLANNING & ENGINEERING, B.W.S. — DATE 12/6/89

1/4" = 1'-0" 4' 2' 0 4' 8'
3/8" = 1'-0" 1' 0' 1' 2' 3' 4' 5' 6' 7'
SCALE IN FEET

REVISION	DATE	BRIEF	BY	APPROVED

R. M. TOWILL CORPORATION
PLANNERS · ENGINEERS · SURVEYORS · PHOTOGRAMMETRISTS
CONSTRUCTION MANAGERS

GEORGE YOKOTA — REGISTERED PROFESSIONAL ENGINEER — No. 1156-C — HAWAII, U.S.A.

Par En, Inc.
dba Park Engineering

HAWAII COMMUNITY DEVELOPMENT AUTHORITY
STATE OF HAWAII

KAKA'AKO COMMUNITY DEVELOPMENT DISTRICT

I.D. 3

DETECTOR CHECK AND COMPOUND METER CONNECTION DETAILS

ENGINEER: C.O. CHECKED BY: G.Y.
DRAFTSMAN: DATE:
APPROVED:
EXECUTIVE DIRECTOR, HAWAII COMMUNITY DEVELOPMENT AUTHORITY

AS BUILT

FILE	POCKET	FOLDER	NO.

Note: Curb Grades to be adjusted to accomodate wheelchair ramps.

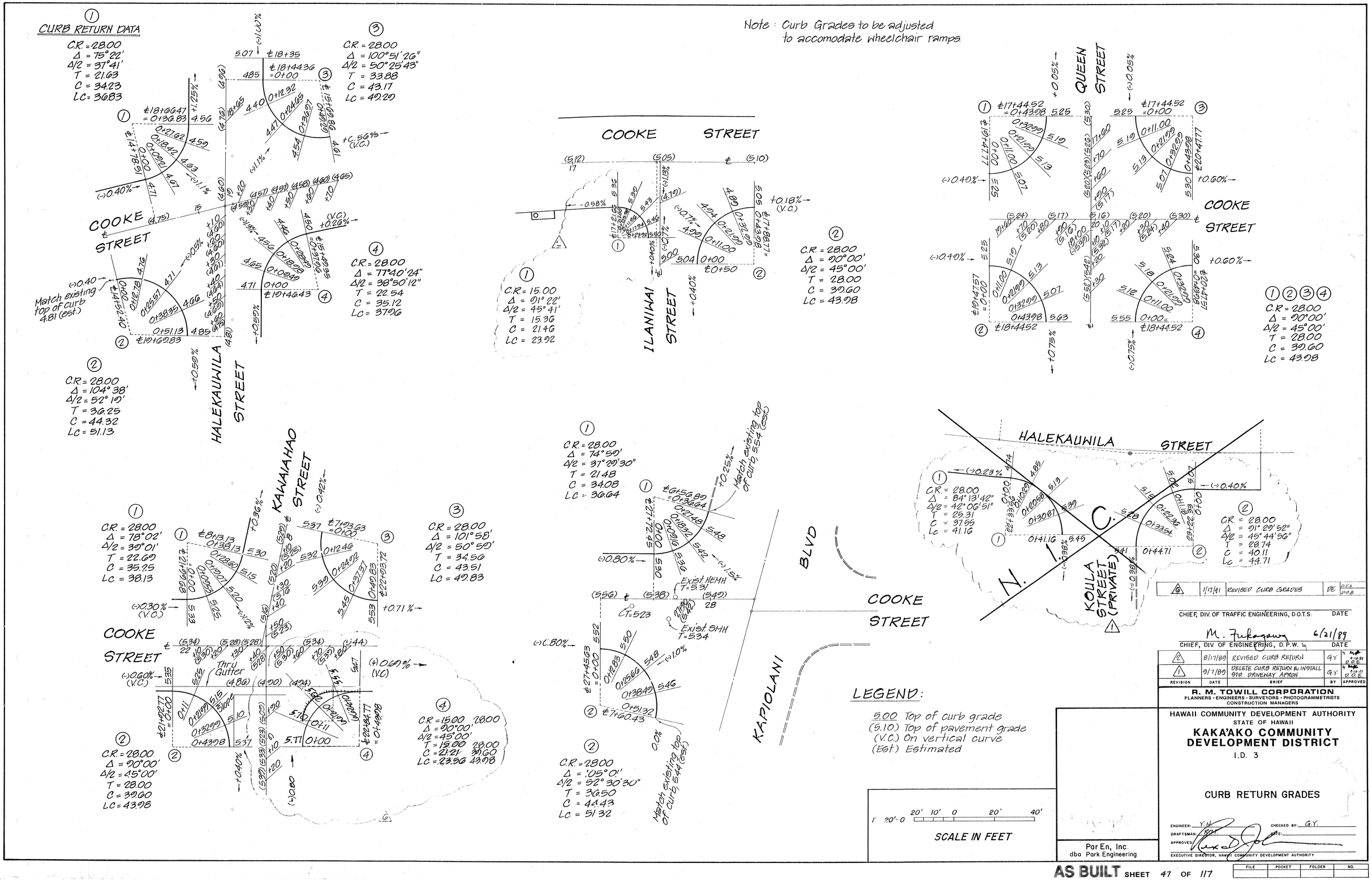

6	1/17/91	REVISED CURB GRADES	DE	D.O.T.S. D.O.B.

CHIEF, DIV. OF TRAFFIC ENGINEERING, D.O.T.S. DATE

M. Fukagawa 6/21/89

CHIEF, DIV. OF ENGINEERING, D.P.W. DATE

REVISION	DATE	BRIEF	BY	APPROVED
2	8/17/89	REVISED CURB RETURN	G.Y.	9-14-89 D.O.E.
1	9/7/89	DELETE CURB RETURN & INSTALL STD. DRIVEWAY APRON	G.Y.	9-14-89 D.O.E.

R. M. TOWILL CORPORATION
PLANNERS · ENGINEERS · SURVEYORS · PHOTOGRAMMETRISTS
CONSTRUCTION MANAGERS

HAWAII COMMUNITY DEVELOPMENT AUTHORITY
STATE OF HAWAII

KAKA'AKO COMMUNITY DEVELOPMENT DISTRICT

I.D. 3

CURB RETURN GRADES

ENGINEER: Y.N. CHECKED BY: G.Y.
DRAFTSMAN: R.M. DATE:
APPROVED:
EXECUTIVE DIRECTOR, HAWAII COMMUNITY DEVELOPMENT AUTHORITY

Par En, Inc.
dba Park Engineering

AS BUILT SHEET 47 OF 117

FILE	POCKET	FOLDER	NO.

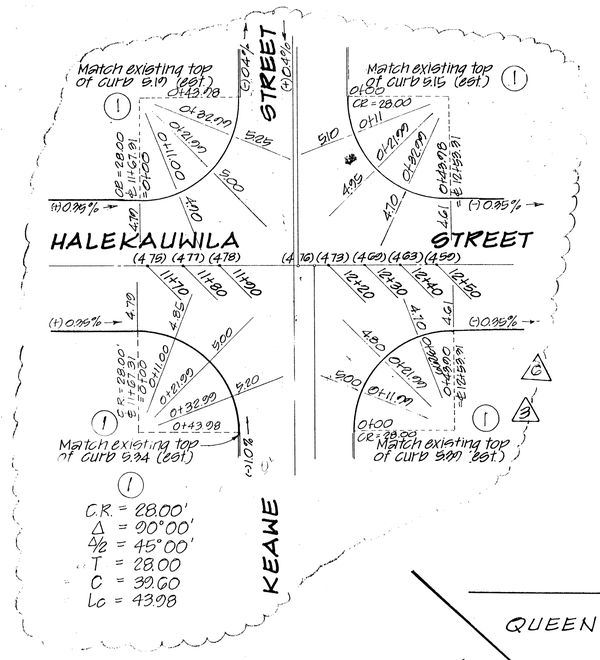

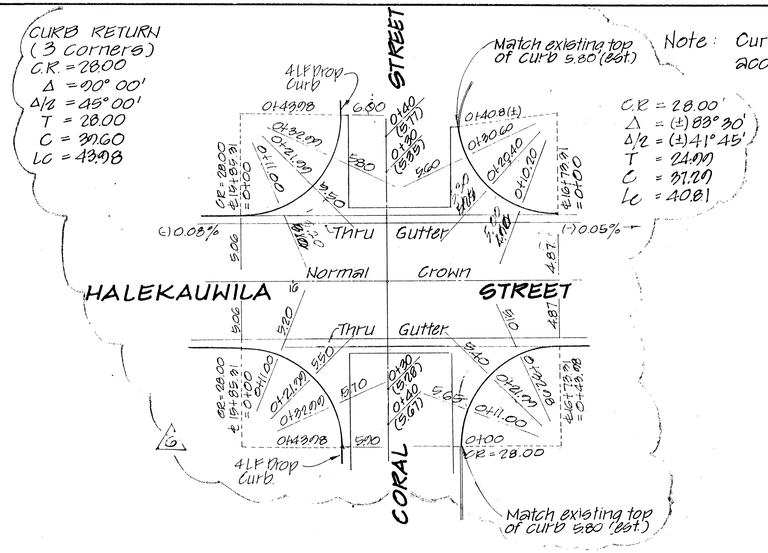

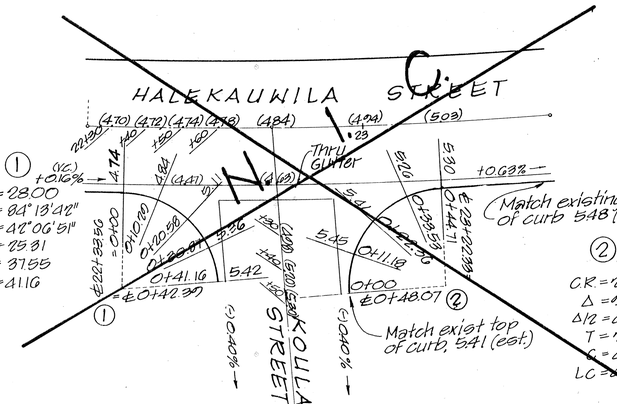

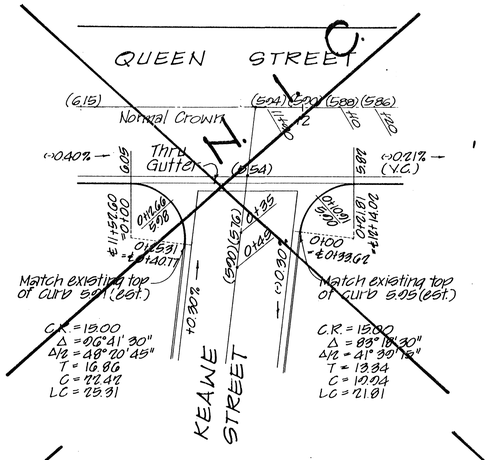

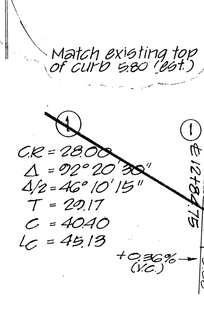

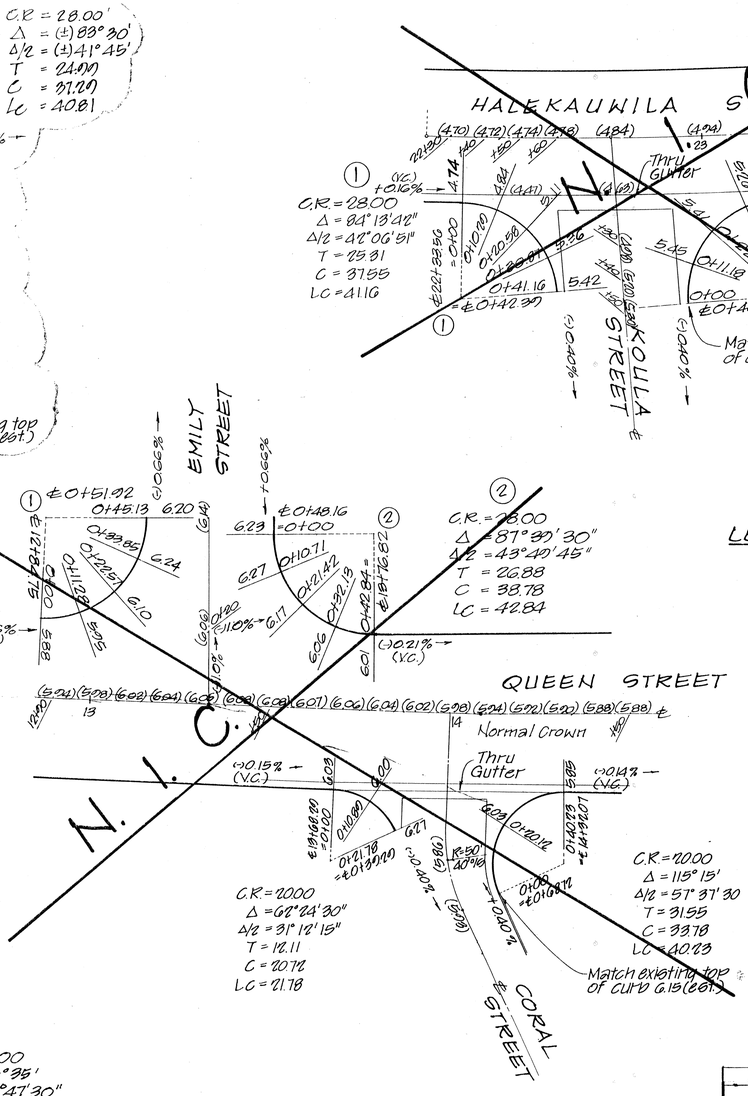

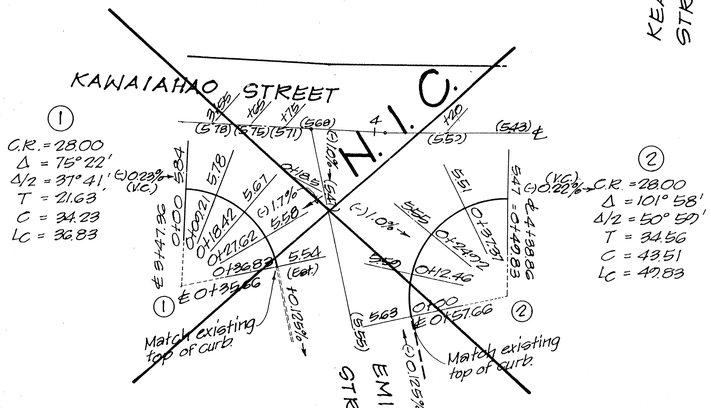

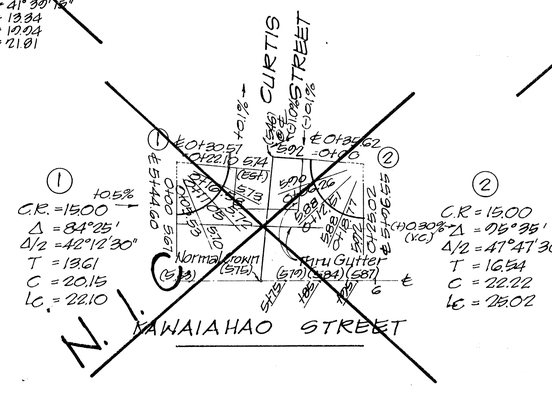

LEGEND:

500 Top of curb grade
(5.10) Top of pavement grade
(V.C.) on Vertical curve
(Est.) Estimated

1" = 20'-0" SCALE IN FEET (20' 10' 0 20' 40')

CHIEF, DIV. OF TRAFFIC ENGINEERING, D.O.T.S. DATE

M. Fukagawa 6/21/89
CHIEF, DIV. OF ENGINEERING, D.P.W. DATE

REVISION	DATE	BRIEF	BY	APPROVED
2 G	1/17/91	REVISED CURB RETURN	DLS	
1 B	10/9/90	REVISED CURB RETURN	G.Y.	

R. M. TOWILL CORPORATION
PLANNERS · ENGINEERS · SURVEYORS · PHOTOGRAMMETRISTS
CONSTRUCTION MANAGERS

HAWAII COMMUNITY DEVELOPMENT AUTHORITY
STATE OF HAWAII

KAKA'AKO COMMUNITY DEVELOPMENT DISTRICT

I. D. 3

CURB RETURN GRADES

GEORGE YOKOTA REGISTERED PROFESSIONAL ENGINEER No. 1156-C HAWAII, U.S.A.

Par En, Inc.
dba Park Engineering

ENGINEER: Y.N. CHECKED BY: G.Y.
DRAFTSMAN: F.S. DATE:
APPROVED:
EXECUTIVE DIRECTOR, HAWAII COMMUNITY DEVELOPMENT AUTHORITY

AS BUILT

FILE	POCKET	FOLDER	NO.

SHEET 48 OF 117

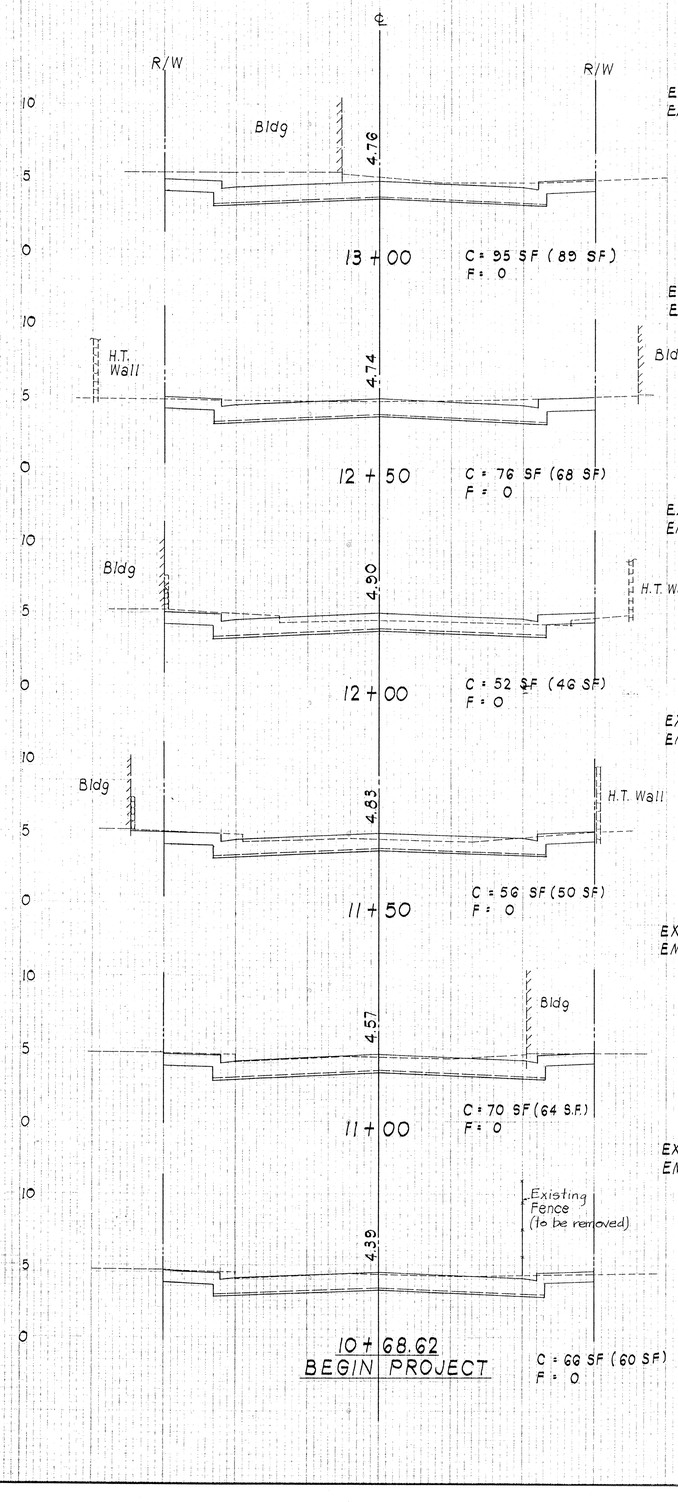

NOTE:

Quantities for Alternate Bid "B" (Portland Cement Concrete Pavement Alternate) are shown in parenthesis.

TOTAL - ESTIMATED IN-PLACE EARTHWORK QUANTITIES FOR ROADWAY

ALTERNATE BID "A"

	EXCAVATION	EMBANKMENT
ROADWAY	1,112 CU YD	0
DRIVEWAY		
TOTAL		

ALTERNATE BID "B"

	EXCAVATION	EMBANKMENT
ROADWAY	1,023 CU.YD.	0
DRIVEWAY		
TOTAL		

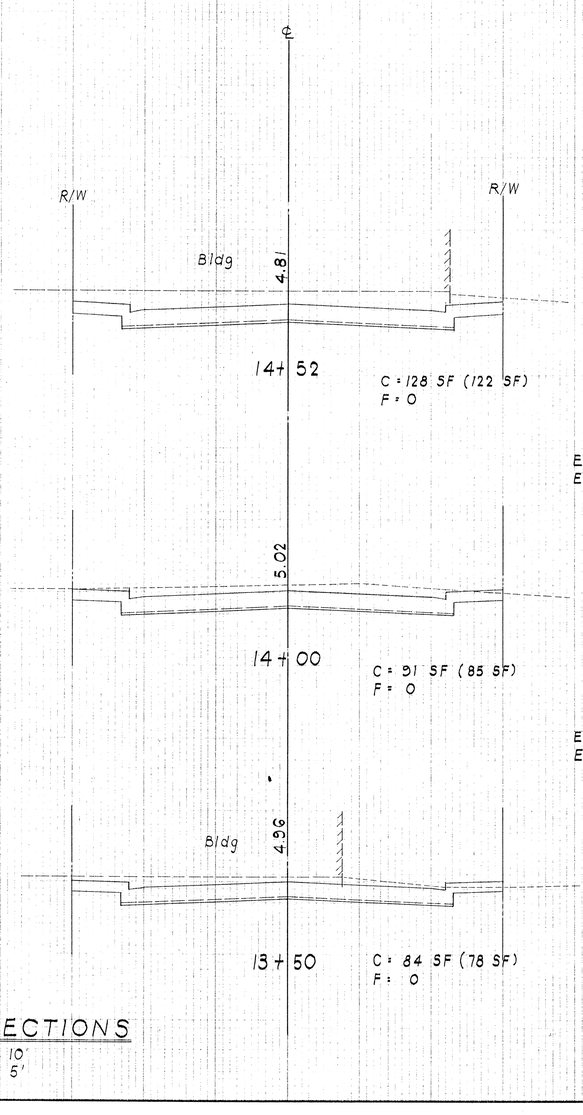

CROSS SECTIONS

Scale: Horiz. 1" = 10'
Vert 1 = 5'

APPROVED:

M. Fukagawa 6/21/89

CHIEF, DIV. OF ENGINEERING, D.P.W. DATE
(FOR CONSTRUCTION WITHIN CITY RIGHT OF WAY ONLY)

1" = 10' 10 0 10 20
1" = 5' 5 0 5 10
SCALE IN FEET

REVISION	DATE	BRIEF	BY	APPROVED

R. M. TOWILL CORPORATION
PLANNERS · ENGINEERS · SURVEYORS · PHOTOGRAMMETRISTS
CONSTRUCTION MANAGERS

HAWAII COMMUNITY DEVELOPMENT AUTHORITY
STATE OF HAWAII

KAKA'AKO COMMUNITY DEVELOPMENT DISTRICT

IMPROVEMENT DISTRICT 3

COOKE STREET CROSS SECTIONS

Andrew Young

ENGINEER: ASHY CHECKED BY: ASHY
DRAFTSMAN: RO DATE:
APPROVED:
EXECUTIVE DIRECTOR, HAWAII COMMUNITY DEVELOPMENT AUTHORITY

AS BUILT SHEET 51A OF 117

FILE	POCKET	FOLDER	NO.

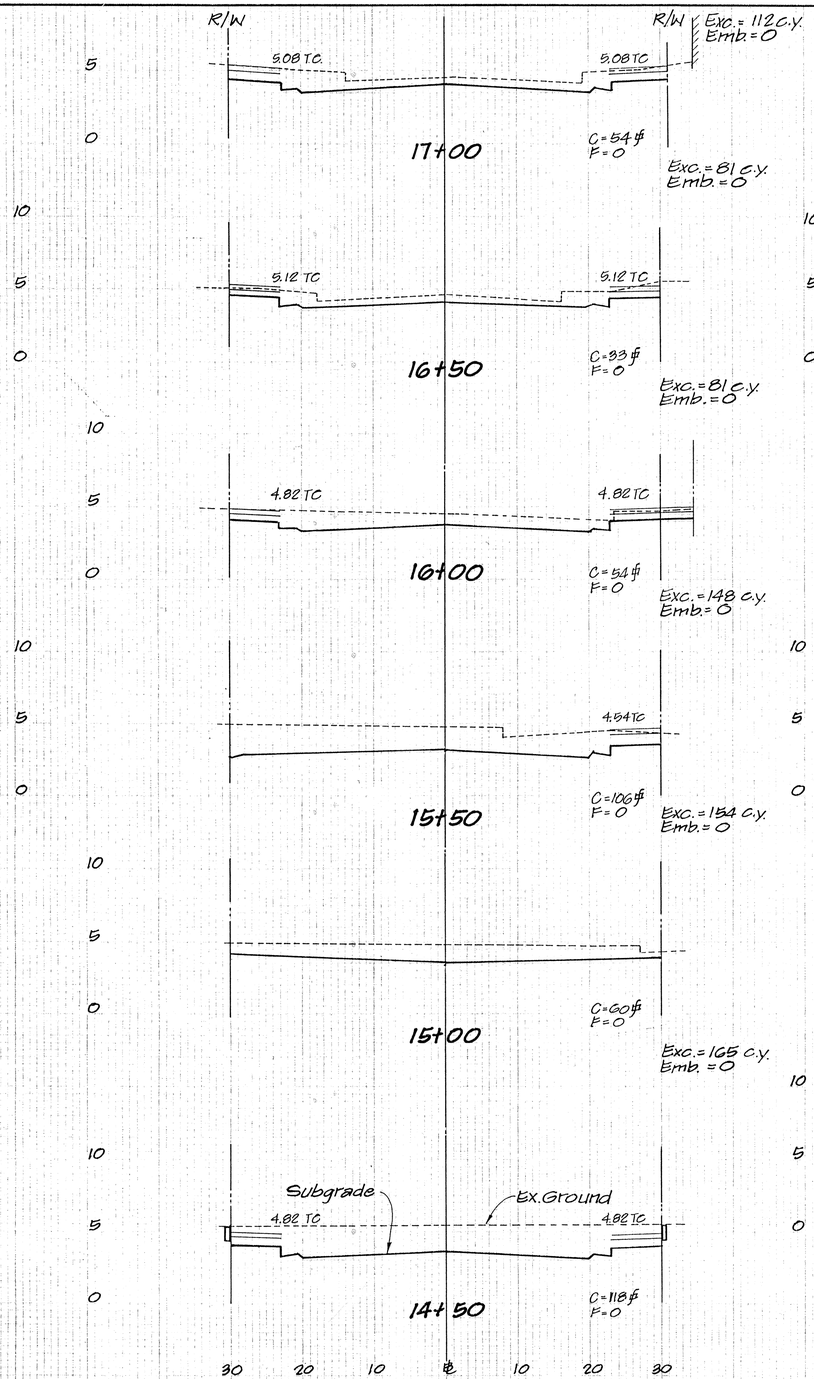

COOKE STREET

scale: Horiz. 1"=10'
Vert. 1"=5'

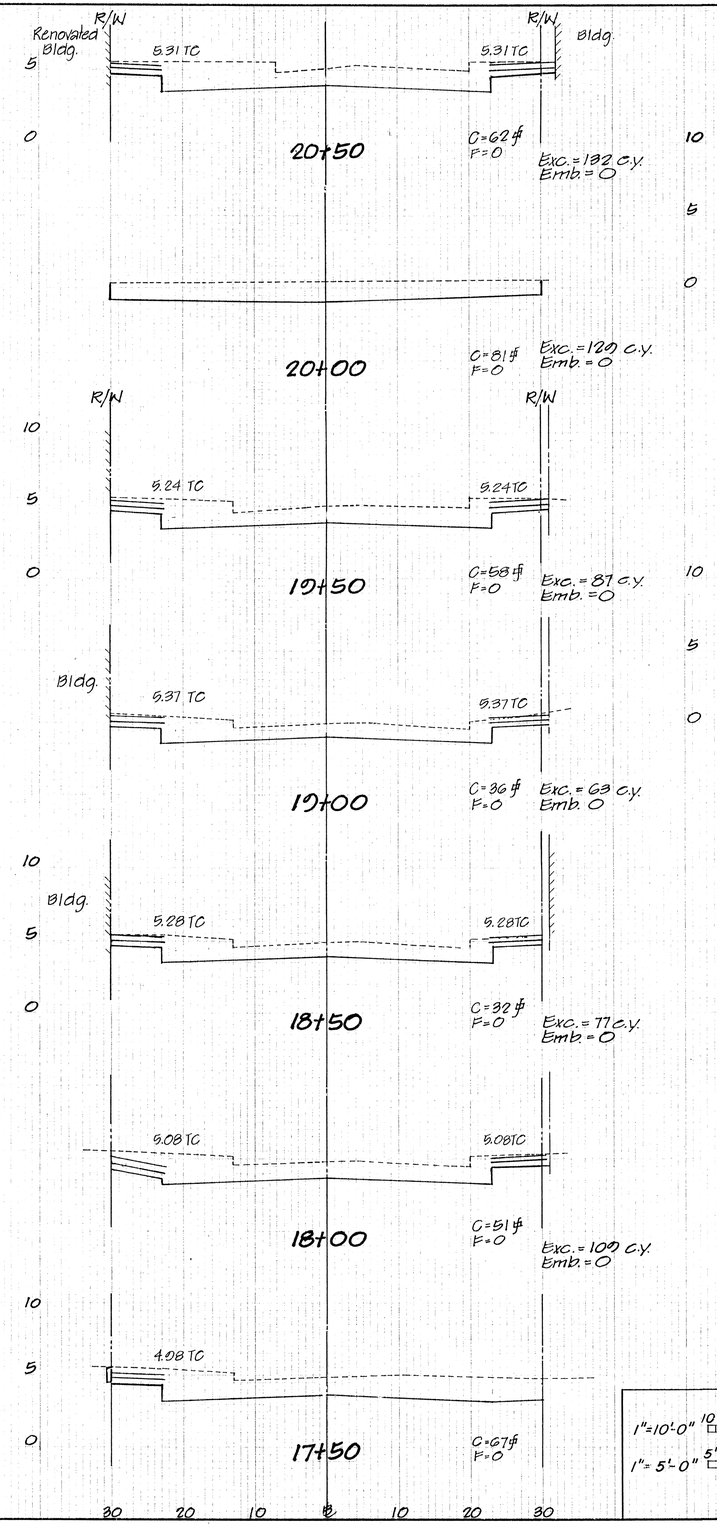

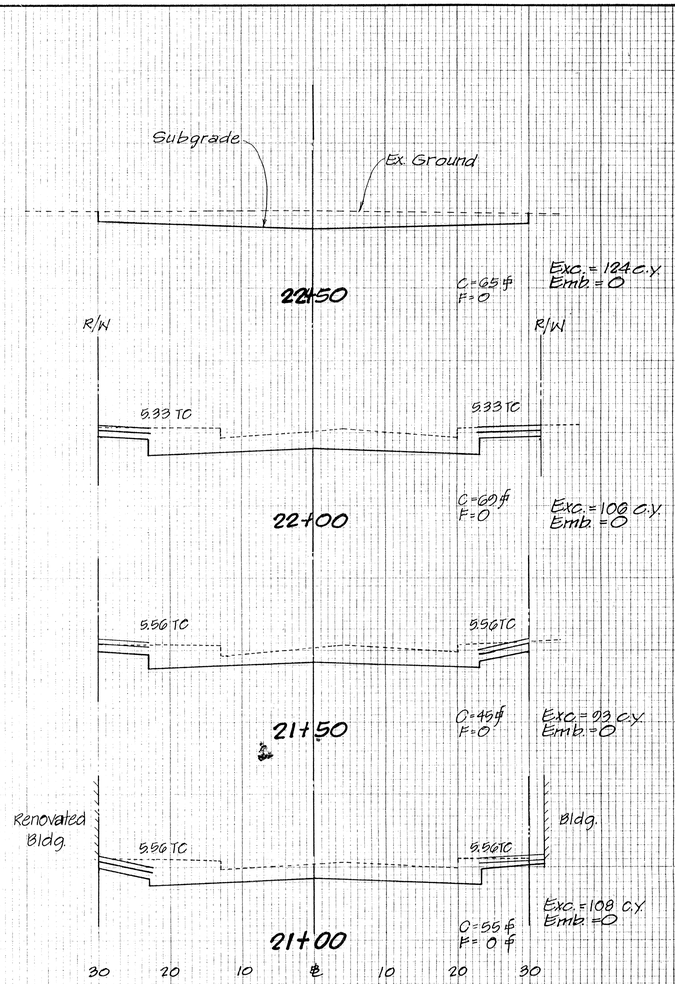

1"=10'-0" 10' 5' 0 10' 20'
1"= 5'-0" 5' 0 5' 10'

SCALE IN FEET

M. Fukuyama 6/21/89
CHIEF, DIV. OF ENGINEERING, D.P.W. DATE

REVISION	DATE	BRIEF	BY	APPROVED

R. M. TOWILL CORPORATION
PLANNERS · ENGINEERS · SURVEYORS · PHOTOGRAMMETRISTS
CONSTRUCTION MANAGERS

GEORGE YOKOTA
REGISTERED PROFESSIONAL ENGINEER
No. 1156-C
HAWAII, U.S.A.

Par En, Inc.
dba Park Engineering

HAWAII COMMUNITY DEVELOPMENT AUTHORITY
STATE OF HAWAII

KAKA'AKO COMMUNITY DEVELOPMENT DISTRICT

I. D. 3

COOKE STREET

CROSS SECTIONS

ENGINEER: C.O. CHECKED BY: G.Y.
DRAFTSMAN: [illegible] DATE:
APPROVED:
EXECUTIVE DIRECTOR, HAWAII COMMUNITY DEVELOPMENT AUTHORITY

FILE	POCKET	FOLDER	NO.

AS BUILT SHEET 52 OF 117

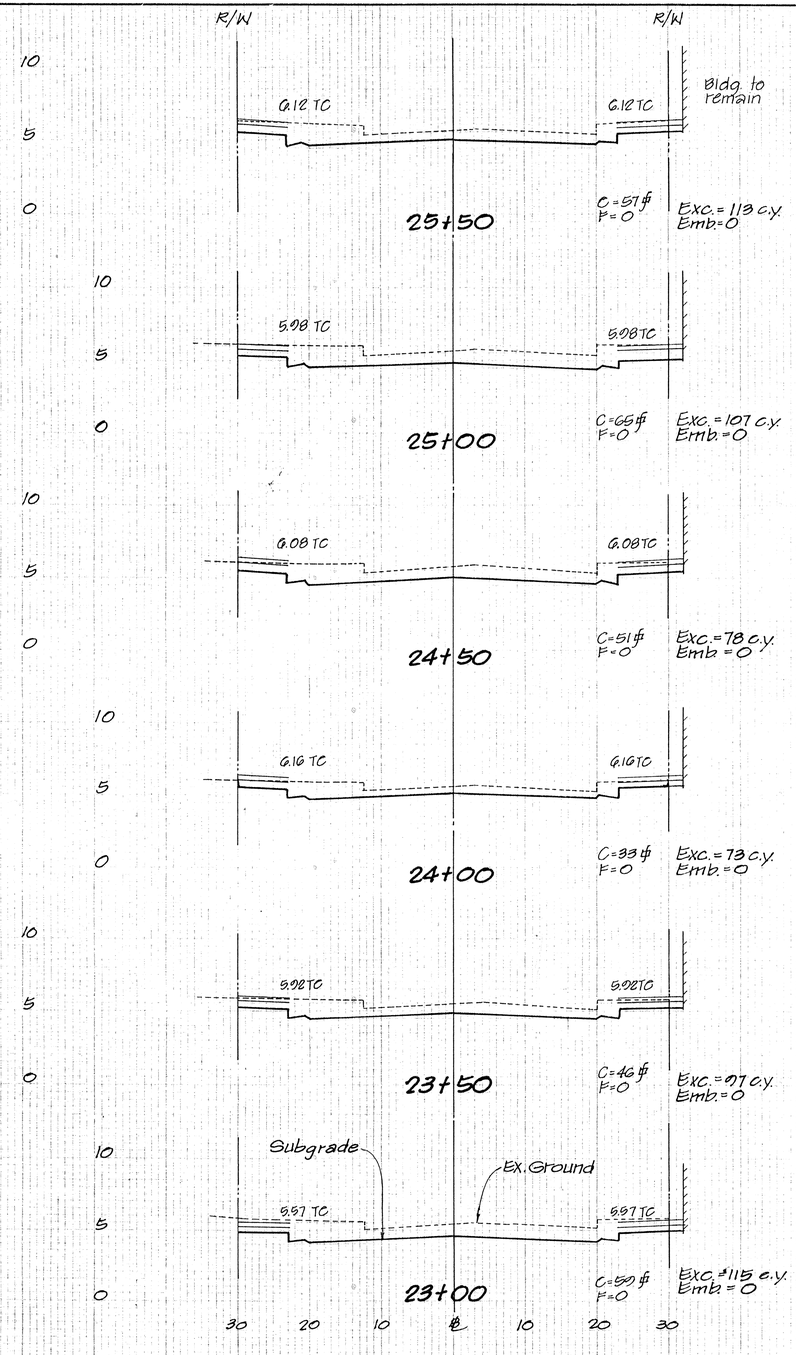

COOKE STREET

scale: Horiz. 1"=10'
Vert. 1"=5'

EARTHWORK QUANTITIES
COOKE STREET

Excavation=2,738 c.y.
Embankment = 0

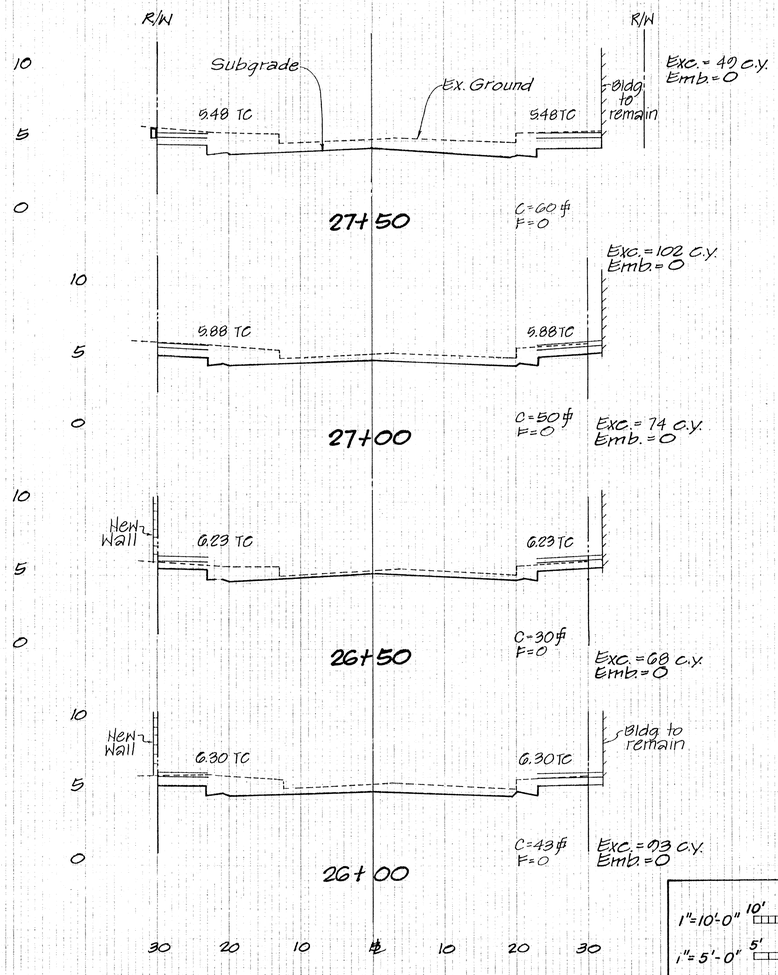

1"=10'-0" 10' 5' 0 10' 20'
1"=5'-0" 5' 0 5' 10'
SCALE IN FEET

M. Fukagawa 6/21/89
CHIEF, DIV. OF ENGINEERING, D.P.W. DATE

REVISION	DATE	BRIEF	BY	APPROVED

R. M. TOWILL CORPORATION
PLANNERS · ENGINEERS · SURVEYORS · PHOTOGRAMMETRISTS
CONSTRUCTION MANAGERS

GEORGE YOKOTA
REGISTERED PROFESSIONAL ENGINEER
No. 1156-C
HAWAII, U.S.A.

THIS WORK WAS PREPARED BY ME OR UNDER MY SUPERVISION

Par En, Inc.
dba Park Engineering

HAWAII COMMUNITY DEVELOPMENT AUTHORITY
STATE OF HAWAII

KAKA'AKO COMMUNITY DEVELOPMENT DISTRICT

I. D. 3

COOKE STREET

CROSS SECTIONS

ENGINEER: CO CHECKED BY: GY
DRAFTSMAN: RS DATE:
APPROVED:
EXECUTIVE DIRECTOR, HAWAII COMMUNITY DEVELOPMENT AUTHORITY

FILE	POCKET	FOLDER	NO.

AS BUILT SHEET 53 OF 117

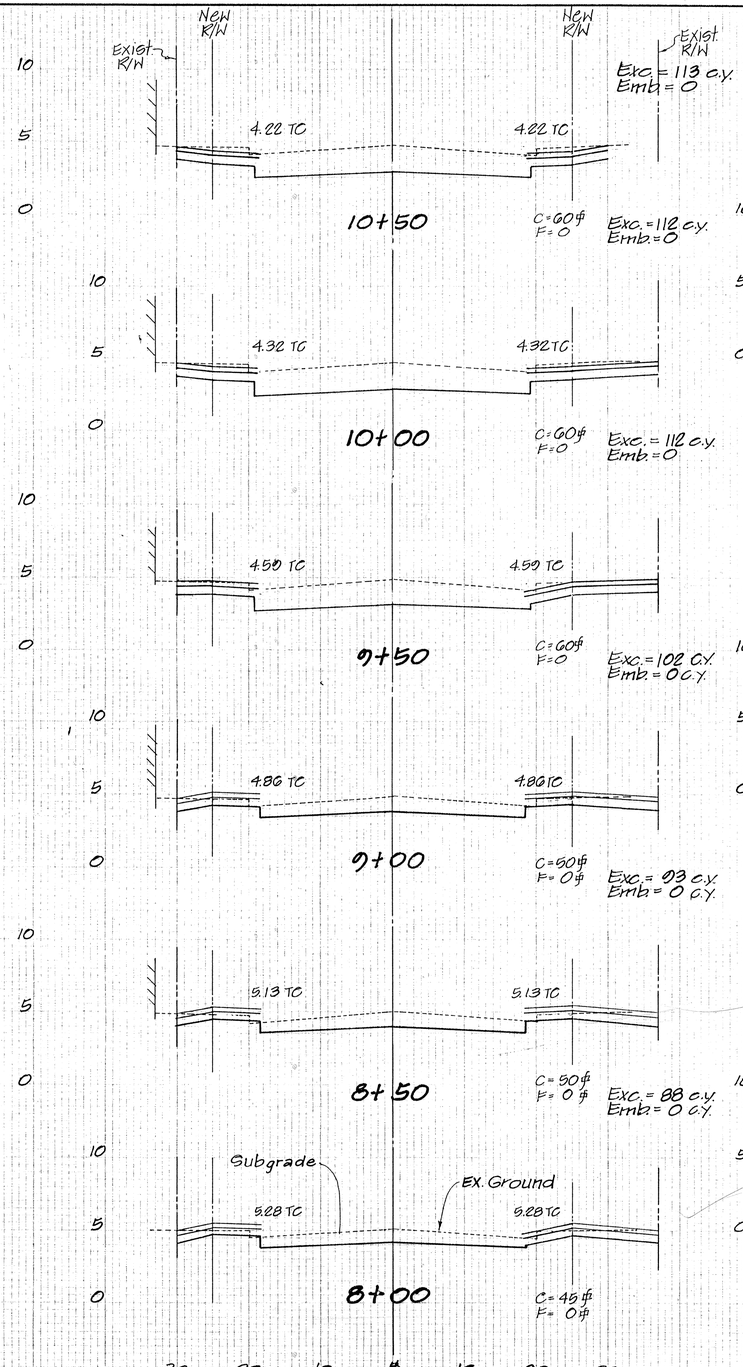

HALEKAUWILA STREET

Scale: Horiz. 1"=10'
Vert. 1"=5'

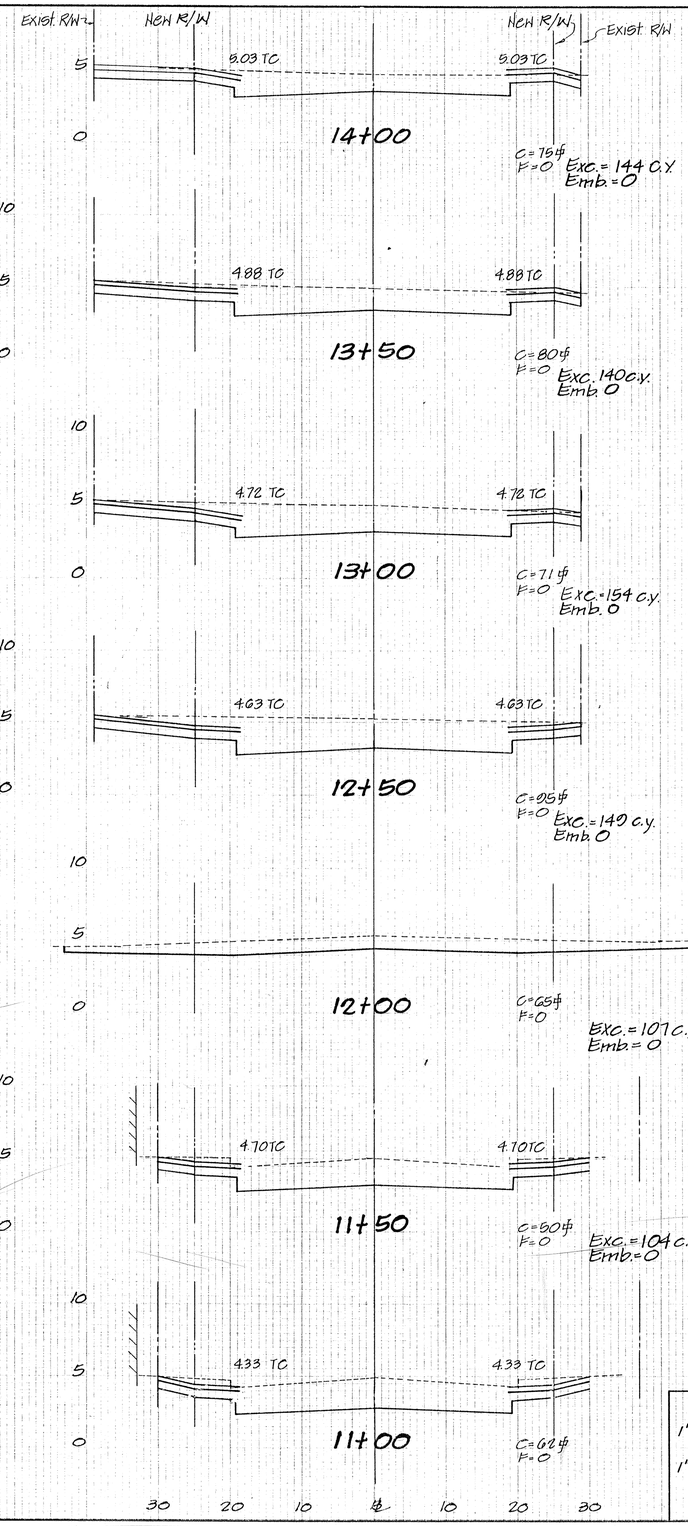

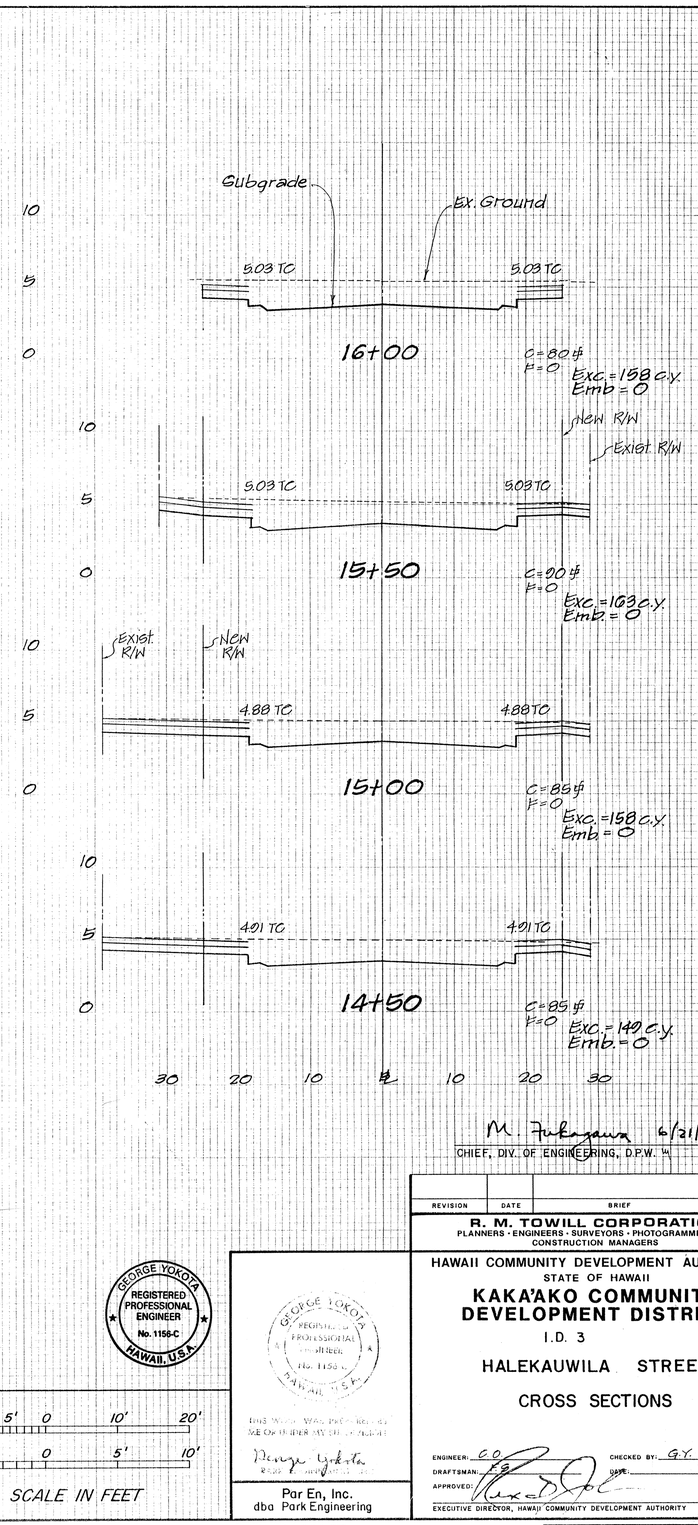

M. Fukuyama 6/21/89
CHIEF, DIV. OF ENGINEERING, D.P.W. DATE

REVISION	DATE	BRIEF	BY	APPROVED

R. M. TOWILL CORPORATION
PLANNERS · ENGINEERS · SURVEYORS · PHOTOGRAMMETRISTS
CONSTRUCTION MANAGERS

GEORGE YOKOTA REGISTERED PROFESSIONAL ENGINEER No. 1156-C HAWAII, U.S.A.

1"=10'-0" 10' 5' 0 10' 20'
1"=5'-0" 5' 0 5' 10'
SCALE IN FEET

GEORGE YOKOTA REGISTERED PROFESSIONAL ENGINEER No. 1156 HAWAII, U.S.A.

THIS MAP WAS PREPARED BY ME OR UNDER MY SUPERVISION.
George Yokota
REGISTERED ENGINEER

Par En, Inc.
dba Park Engineering

HAWAII COMMUNITY DEVELOPMENT AUTHORITY
STATE OF HAWAII

KAKA'AKO COMMUNITY DEVELOPMENT DISTRICT

I.D. 3

HALEKAUWILA STREET

CROSS SECTIONS

ENGINEER: CO CHECKED BY: G.Y.
DRAFTSMAN: FS DATE:
APPROVED:
EXECUTIVE DIRECTOR, HAWAII COMMUNITY DEVELOPMENT AUTHORITY

FILE	POCKET	FOLDER	NO.

AS BUILT SHEET 54 OF 117

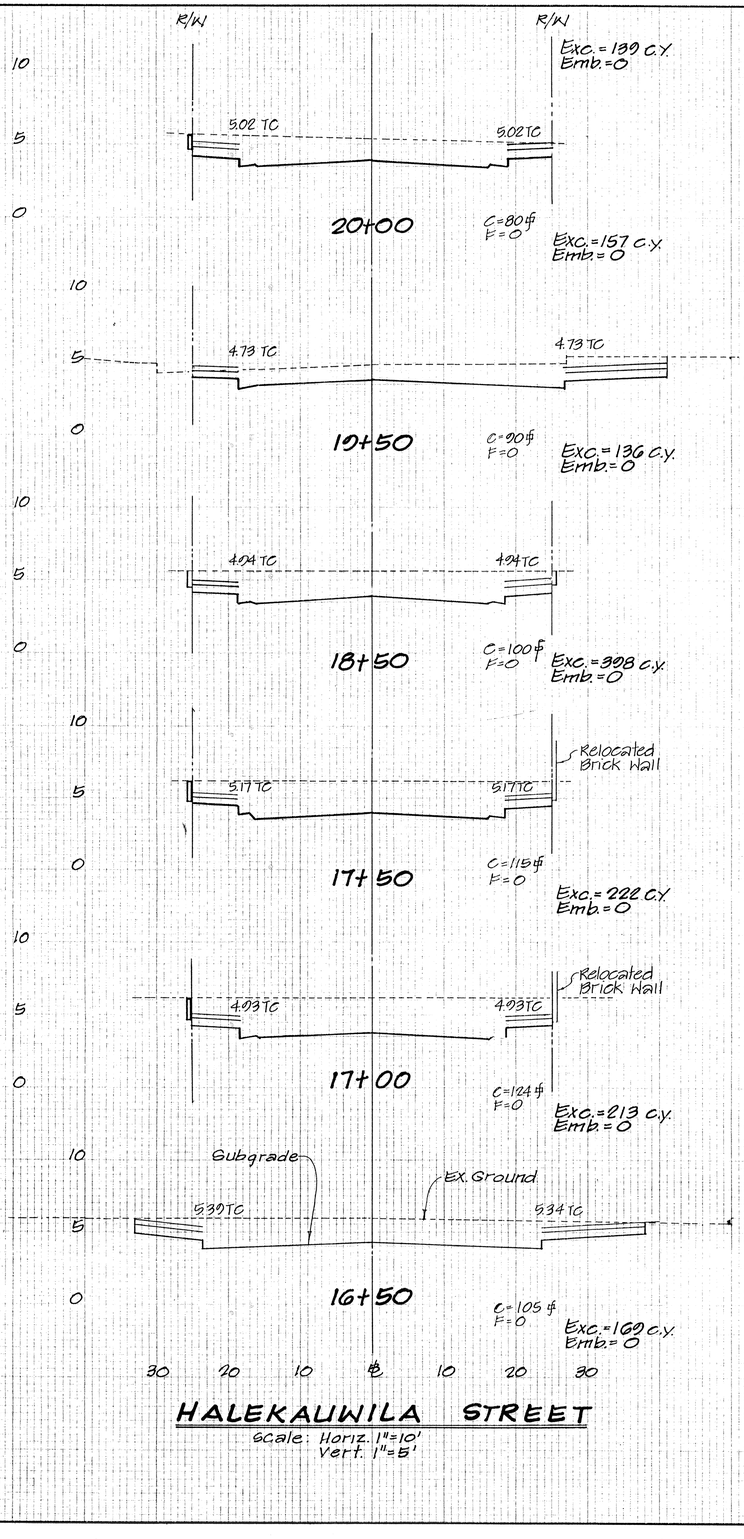

HALEKAUWILA STREET

Scale: Horiz. 1"=10'
Vert. 1"=5'

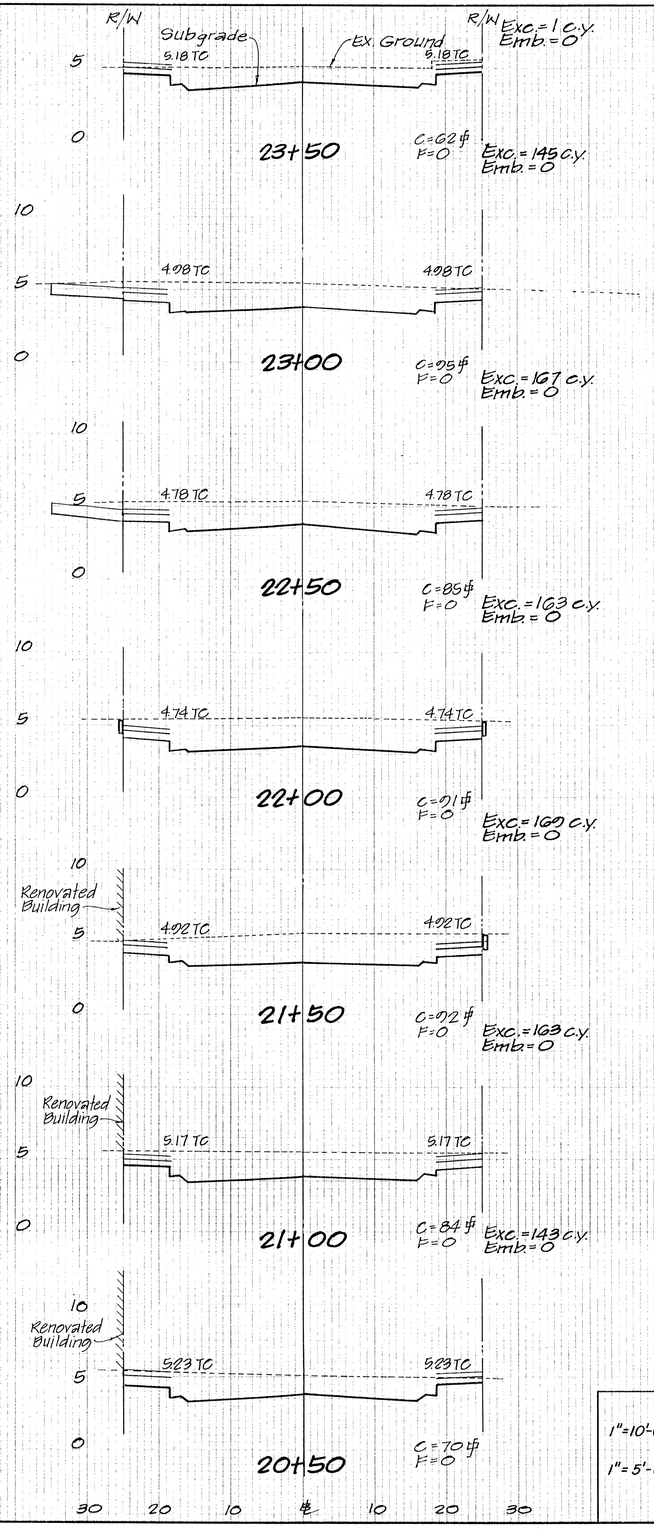

EARTHWORK QUANTITIES
HALEKAUWILA STREET
Excavation = 4430 c.y.
Embankment = 0

M. Fukagawa 6/21/89
CHIEF, DIV. OF ENGINEERING, D.P.W. 'H DATE

REVISION	DATE	BRIEF	BY	APPROVED

R. M. TOWILL CORPORATION
PLANNERS · ENGINEERS · SURVEYORS · PHOTOGRAMMETRISTS
CONSTRUCTION MANAGERS

GEORGE YOKOTA
REGISTERED PROFESSIONAL ENGINEER
No. 1156-C
HAWAII, U.S.A.

1"=10'-0" 10' 5' 0 10' 20'
1"=5'-0" 5' 0 5' 10'
SCALE IN FEET

THE WORK WAS PREPARED BY ME OR UNDER MY SUPERVISION.
Par En, Inc. dba Park Engineering

HAWAII COMMUNITY DEVELOPMENT AUTHORITY
STATE OF HAWAII
KAKA'AKO COMMUNITY DEVELOPMENT DISTRICT
I.D. 3
HALEKAUWILA STREET
CROSS SECTIONS

ENGINEER: C.O. CHECKED BY: G.Y.
DRAFTSMAN: F.S. DATE:
APPROVED:
EXECUTIVE DIRECTOR, HAWAII COMMUNITY DEVELOPMENT AUTHORITY

FILE	POCKET	FOLDER	NO.

AS BUILT SHEET 55 OF 117

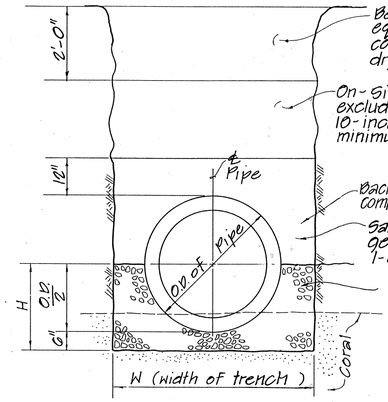

PIPE SIZE	DRAIN		SEWER		WATER *	
	W (in)	H (in)	W (in)	H (in)	W (in)	H (in)
6"			24	10	24	10
8"			24	11	24	11
10"			24	12		
12"			30	13	24	13
18"	36	18	41	16		
24"	48	21	50	21		
30"	56	25	57	20		
36"	66	28				
42"	77	32				
48"	87	35				
54"	98	39				
20"					36	17

* See B.W.S. "Water System Standards" for trench backfill above pipe bedding material

PIPE BEDDING ~ TRENCH DETAIL
PIPES BEARING ON CORAL AT THE INVERT LEVEL

Not to scale

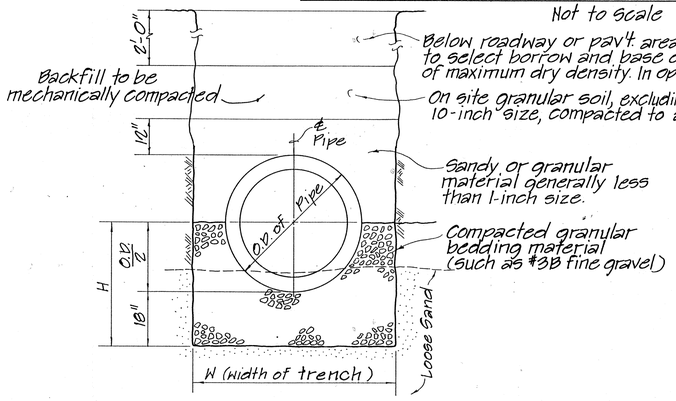

PIPE SIZE	DRAIN		SEWER		WATER *	
	W (in)	H (in)	W (in)	H (in)	W (in)	H (in)
6"			24	22	24	22
8"			24	23	24	23
10"			24	24		
12"			30	25	24	25
18"	36	30	41	28		
24"	48	33	50	33		
30"	56	37	57	38		
36"	66	40				
42"	77	44				
48"	87	47				
54"	98	51				
20"					36	20

PIPE BEDDING ~ TRENCH DETAIL
PIPES BEARING ON LOOSE SAND

Not to scale

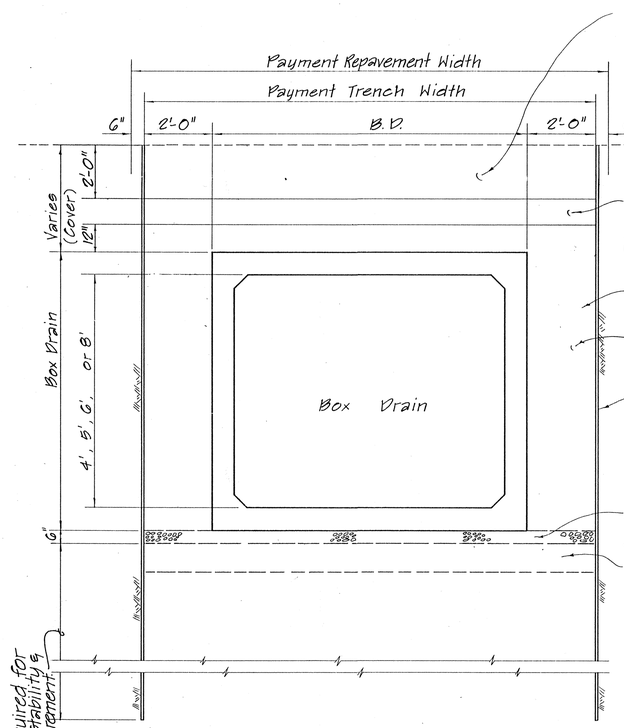

TYPICAL BOX DRAIN TRENCH DETAIL

Scale : 3/8" = 1'-0"

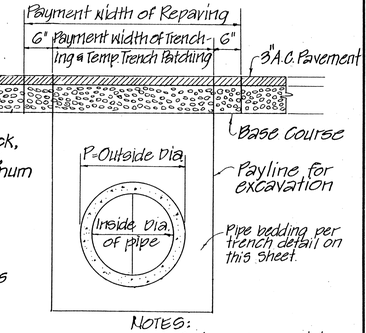

NOTES:
1. Restore pavement to match existing pavement.
2. Minimum thickness of pavement:
   A.C. Pavement = 3"
   Base Course = 6"
3. Excavation for extra 6" width of repaving to be included width trench excavation

TRENCH REPAVING FOR DRAIN PIPES

Scale: 3/4" = 1'-0"

3/8" = 1'-0" 1' 0 1' 2' 3' 4' 5' 6' 7'

SCALE IN FEET

for CHIEF, PLNG. & ENGR., B.W.S. — 12/6/89 DATE

CHIEF, DIV. OF W.W.M./D.P.W. — 5/10/89 DATE

CHIEF, DIV. OF ENGINEERING — 6/21/89 DATE

REVISION	DATE	BRIEF	BY	APPROVED

R. M. TOWILL CORPORATION
PLANNERS · ENGINEERS · SURVEYORS · PHOTOGRAMMETHISTS
CONSTRUCTION MANAGERS

GEORGE YOKOTA — REGISTERED PROFESSIONAL ENGINEER — No. 1156-C — HAWAII, U.S.A.

PARK Par En, Inc. dba Park Engineering

HAWAII COMMUNITY DEVELOPMENT AUTHORITY
STATE OF HAWAII
KAKA'AKO COMMUNITY DEVELOPMENT DISTRICT
I.D. 3

TRENCH AND BEDDING DETAILS

ENGINEER: G.Y. CHECKED BY: G.Y.
DRAFTSMAN: DATE:
APPROVED:
EXECUTIVE DIRECTOR, HAWAII COMMUNITY DEVELOPMENT AUTHORITY

FILE	POCKET	FOLDER	NO.

AS BUILT SHEET 77 OF 117

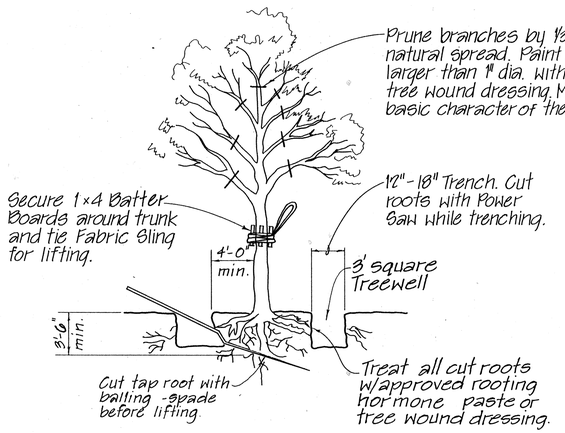

LARGE TREE RELOCATION DETAIL

Not to scale

NOTE:

To reduce shock, Trees should be root-pruned & branched-pruned well in advance of moving, preferably during species dormant season.

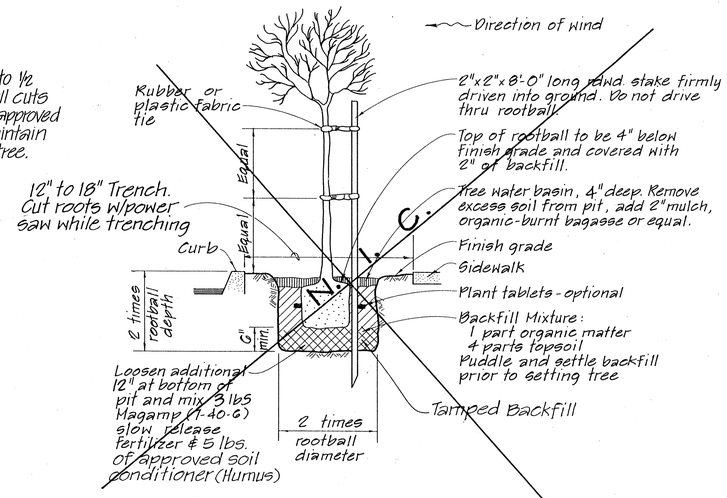

STREET TREE PLANTING DETAIL

Not to scale

STREET TREE LIST

SYMBOL	QUANTITY	BOTANICAL NAME	COMMON NAME	SIZE
⊙	20	Cocos nucifera		12' Ht. x 8' Sp.
⊙	18	Roystonea regia		15' Ht. x 10' Sp.

NOTES:

1. All tree relocation work shall be done by a landscape contractor and under the supervision of the Beautification Administrator. The contractor shall notify the Beautification Administrator (Ph. 923-1847) at least seven days in advance of tree relocation operations and for premaintenance and final inspections for new street trees.
2. All trees designated for relocation shall be relocated to Ala Wai Golf Course except for Coconut Trees which shall be relocated to Ala Moana Park. Exact locations shall be determined in the field by the Beautification Administrator.
3. Maintenance for new street trees shall be for 90 days minimum or until assumed by resident when project is completed, whichever is longer.

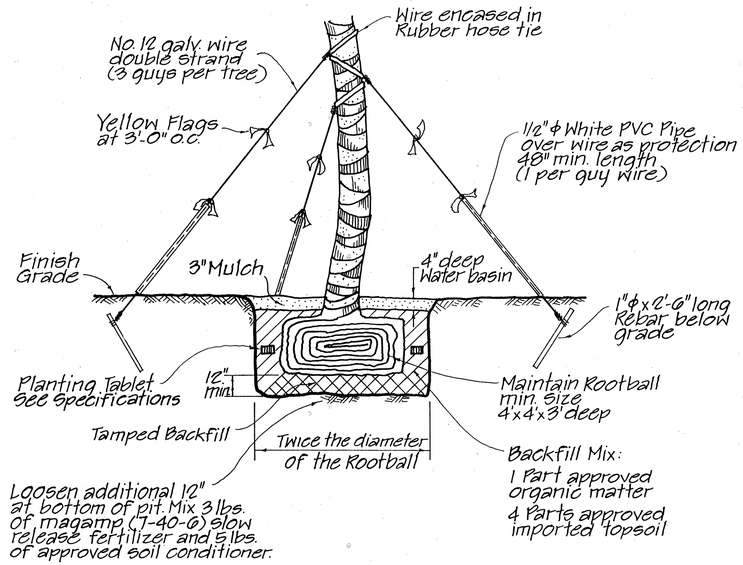

COCONUT PALM RELOCATING AND PLANTING DETAIL

Not to Scale

NOTE:

Trim off all dead fronds, flower stalks and fruits prior to planting.

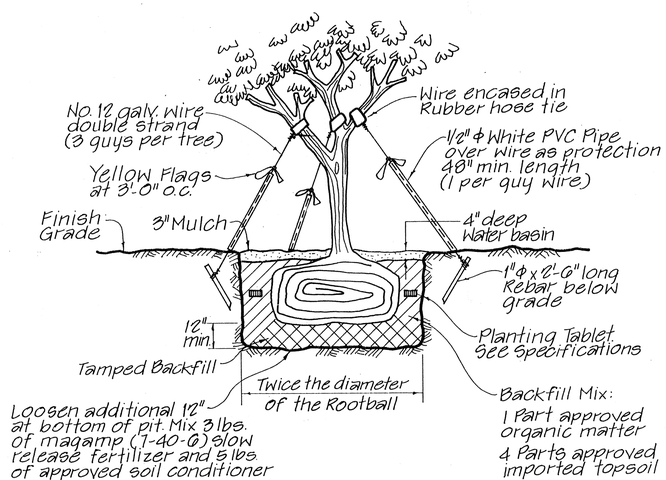

LARGE TREE PLANTING DETAIL AND GUY WIRES

Not to Scale

lm

8-4-89

DIR. DEPARTMENT OF PARKS & RECREATION — DATE

REVISION	DATE	BRIEF	BY	APPROVED

R. M. TOWILL CORPORATION
PLANNERS · ENGINEERS · SURVEYORS · PHOTOGRAMMETRISTS
CONSTRUCTION MANAGERS

HAWAII COMMUNITY DEVELOPMENT AUTHORITY
STATE OF HAWAII

KAKA'AKO COMMUNITY DEVELOPMENT DISTRICT
I.D. 3

STREET TREE PLANTING DETAIL

GEORGE YOKOTA REGISTERED PROFESSIONAL ENGINEER No. 1156-C HAWAII, U.S.A.

Par En, Inc.
dba Park Engineering

ENGINEER: DE — CHECKED BY: G.Y.
DRAFTSMAN: B.M. — DATE:
APPROVED:
EXECUTIVE DIRECTOR, HAWAII COMMUNITY DEVELOPMENT AUTHORITY

FILE	POCKET	FOLDER	NO.

AS BUILT

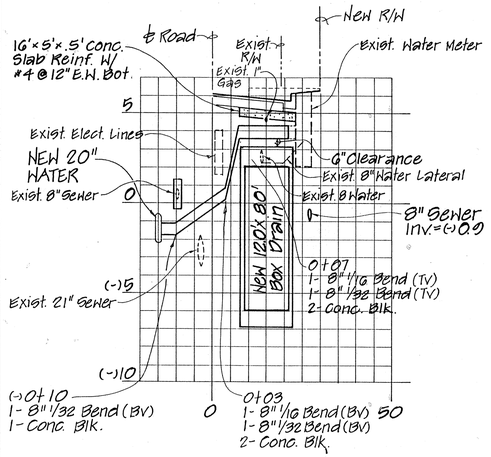

PROFILE 8" WATER LATERAL
AT 24+22 COOKE STREET
(SHEET 13)

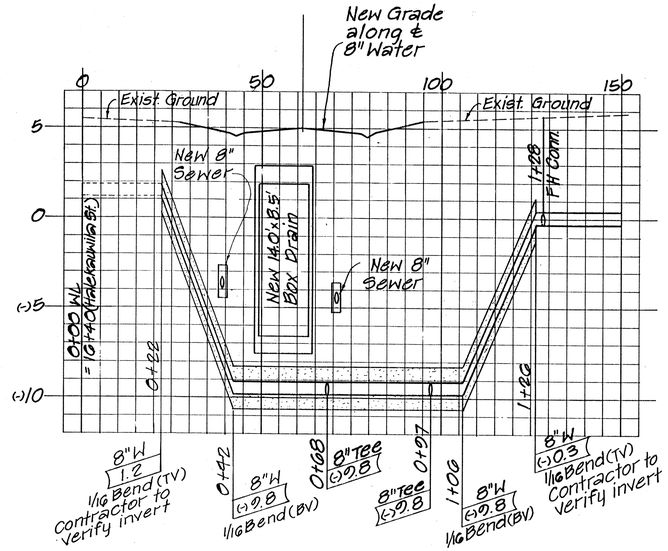

PROFILE 8" WATER
CORAL ST. (Sht. 18)

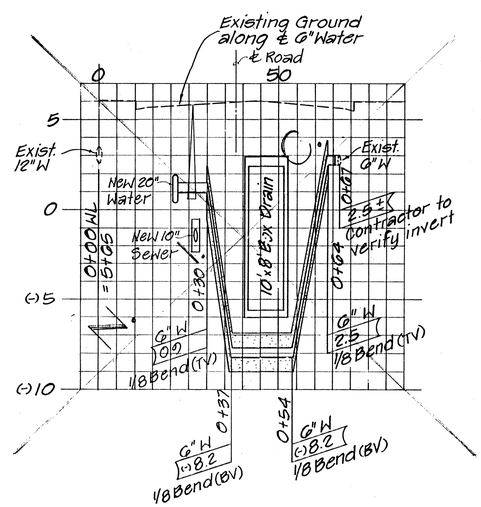

PROFILE 6" WATER
AT 5+60 KAPIOLANI BLVD
(Sht. 25)

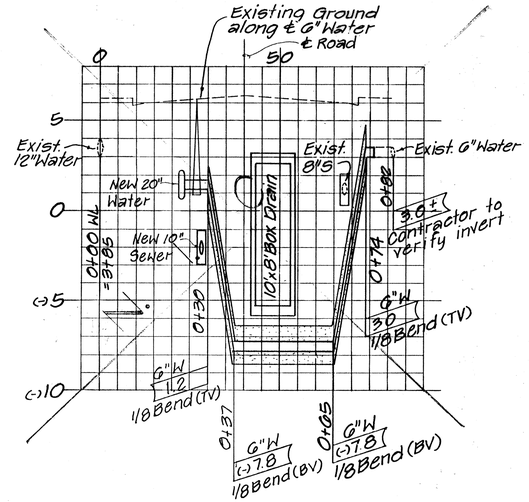

PROFILE 6" WATER
AT 3+91 KAPIOLANI BLVD
(Sht. 25)

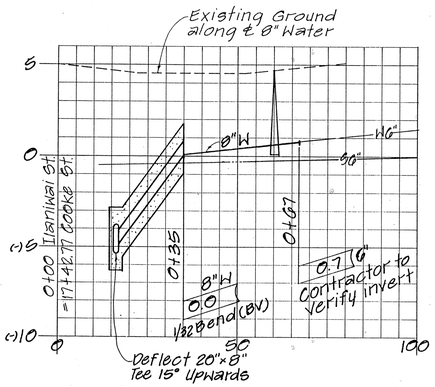

PROFILE 8" WATER
AT ILANIWAI ST. (Sht. 12)

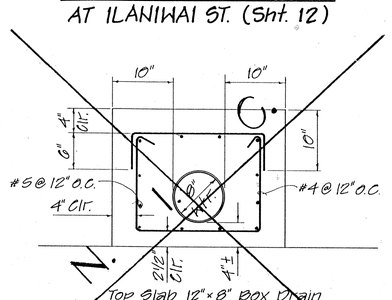

DETAIL - WATERLINE CROSSING
Scale: 1" = 1'-0"

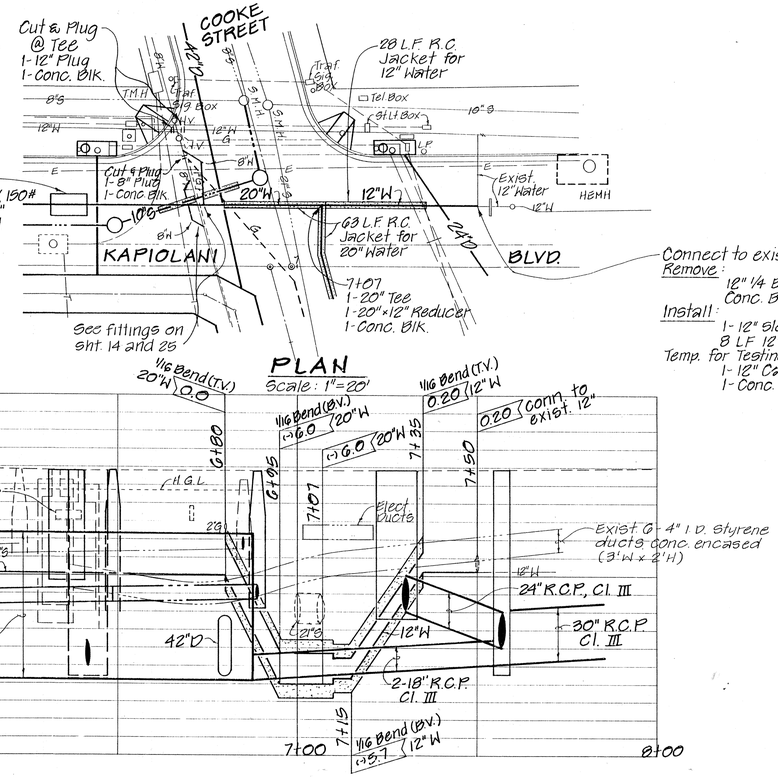

PLAN
Scale: 1" = 20'

PROFILE
Scale: Horiz. 1" = 20'
Vert. 1" = 4'

SCHEME I

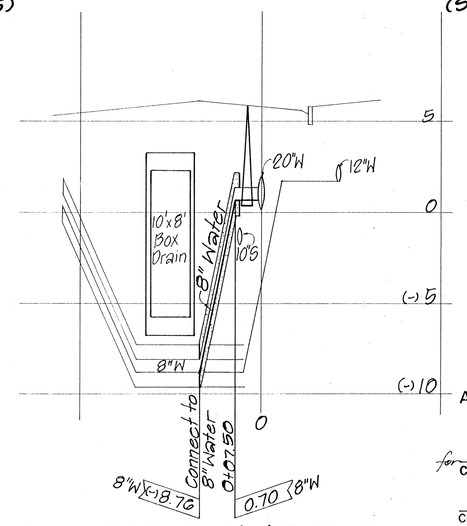

PROFILE 8" WATER
AT 5+88 KAPIOLANI BLVD.
(Sht. 25)
Scale: Horiz. 1" = 20'
Vert. 1" = 4'

1/2" = 1'-0" 1' 0 1' 2' 3' 4' 5'
1" = 4'-0" 4' 2' 0' 4' 8'
1" = 20'-0" 20' 10' 0' 20' 40'

SCALE IN FEET

APPROVED:

for _____ 12/6/89
CHIEF, PLANNING & ENGINEERING, B. W. S. DATE

M. Fukagawa 6/21/89
CHIEF, DIV. OF ENGINEERING DATE

PROPOSED C&C STREET
EXISTING C&C STREET

REVISION	DATE	BRIEF	BY	APPROVED

R. M. TOWILL CORPORATION
PLANNERS · ENGINEERS · SURVEYORS · PHOTOGRAMMETRISTS
CONSTRUCTION MANAGERS

GEORGE YOKOTA REGISTERED PROFESSIONAL ENGINEER No. 1156-C HAWAII, U.S.A.

Par En, Inc.
dba Park Engineering

HAWAII COMMUNITY DEVELOPMENT AUTHORITY
STATE OF HAWAII
KAKA'AKO COMMUNITY DEVELOPMENT DISTRICT
I.D. 3

WATERLINE PROFILES

ENGINEER: C.O. CHECKED BY: G.Y.
DRAFTSMAN: DATE:
APPROVED:
EXECUTIVE DIRECTOR, HAWAII COMMUNITY DEVELOPMENT AUTHORITY

AS BUILT SHEET 80 OF 117

FILE	POCKET	FOLDER	NO.

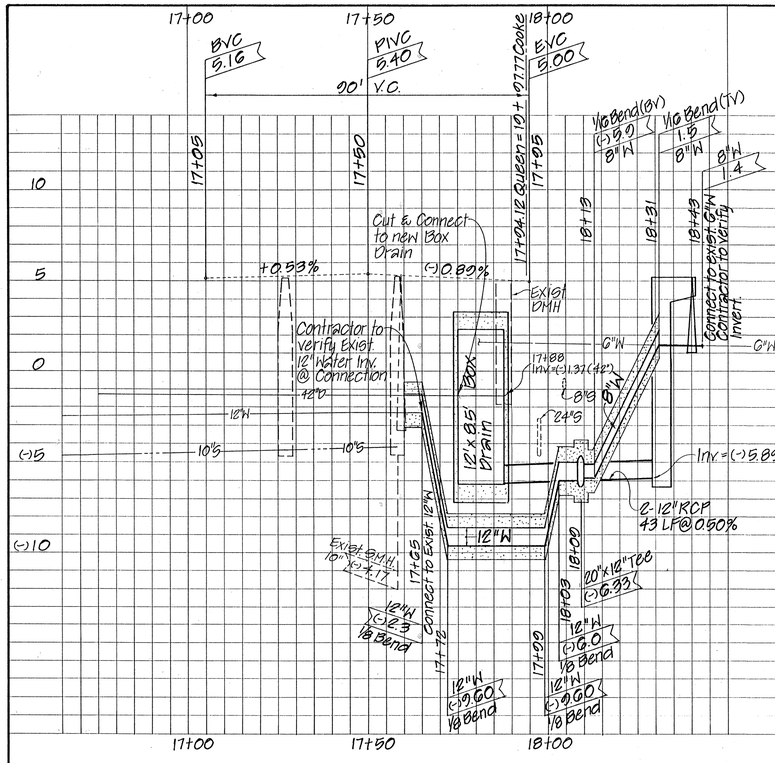

PROFILE ~ QUEEN STREET (See Sheet 13)

Scale: Horiz. 1" = 20'
Vert. 1" = 4'

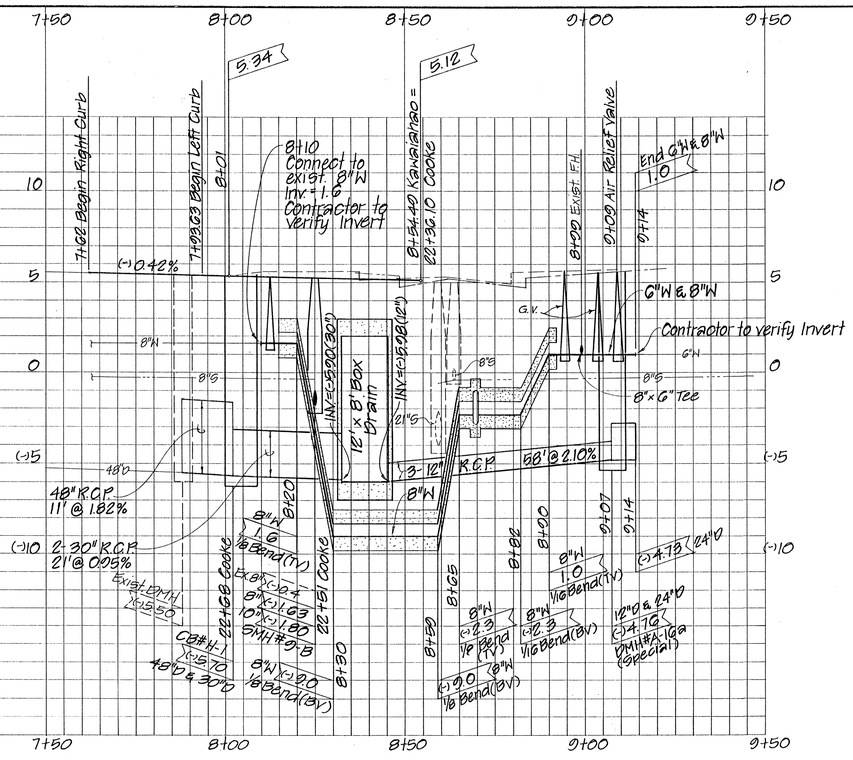

PROFILE ~ KAWAIAHAO STREET (See Sheet 13)

Scale: Horiz. 1" = 20'
Vert. 1" = 4'

M. Fukuyama 6/21/89
CHIEF, DIV. OF ENGINEERING, D.P.W. DATE

for [signature] 12/6/89
CHIEF, PLANNING & ENGINEERING, B.W.S. DATE

REVISION	DATE	BRIEF	BY	APPROVED

R. M. TOWILL CORPORATION
PLANNERS · ENGINEERS · SURVEYORS · PHOTOGRAMMETRISTS
CONSTRUCTION MANAGERS

GEORGE YOKOTA REGISTERED PROFESSIONAL ENGINEER No. 1156-C HAWAII, U.S.A.

THIS PLAN WAS PREPARED BY ME OR UNDER MY SUPERVISION
on: [signature]

ParEn, Inc.
dba Park Engineering

HAWAII COMMUNITY DEVELOPMENT AUTHORITY
STATE OF HAWAII
KAKA'AKO COMMUNITY DEVELOPMENT DISTRICT
I.D. 3

WATER LINE PROFILES

ENGINEER: G.Y. CHECKED BY: G.Y.
DRAFTSMAN: DATE:
APPROVED:
EXECUTIVE DIRECTOR, HAWAII COMMUNITY DEVELOPMENT AUTHORITY

AS BUILT SHEET 80A OF 117

FILE	POCKET	FOLDER	NO.

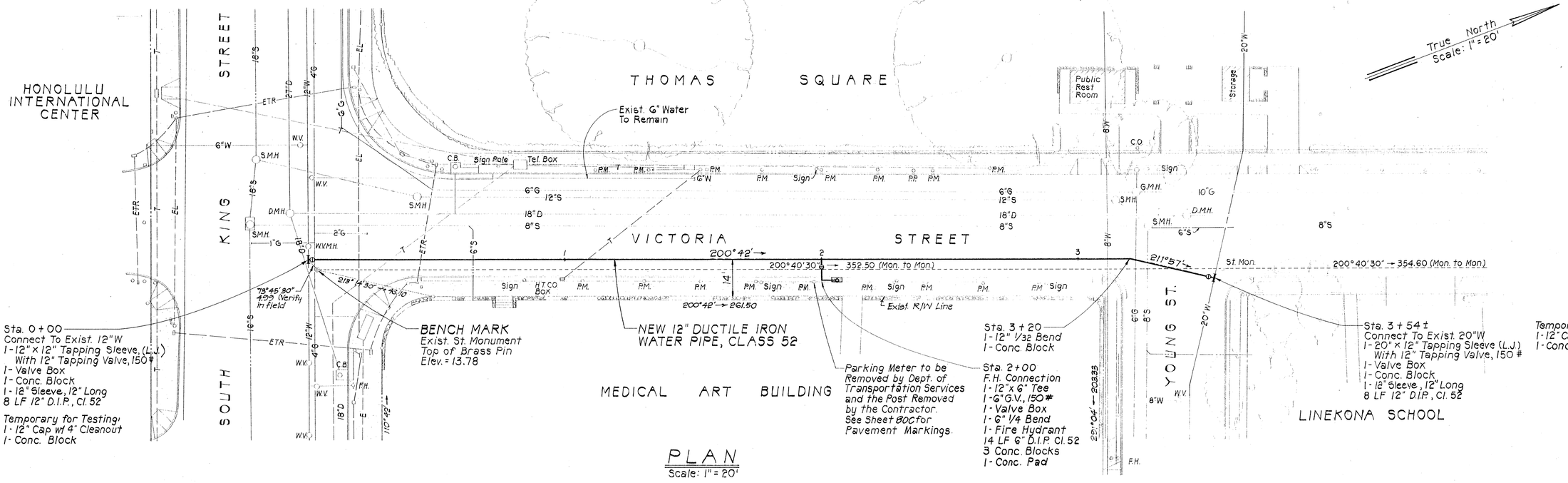

PLAN
Scale: 1" = 20'

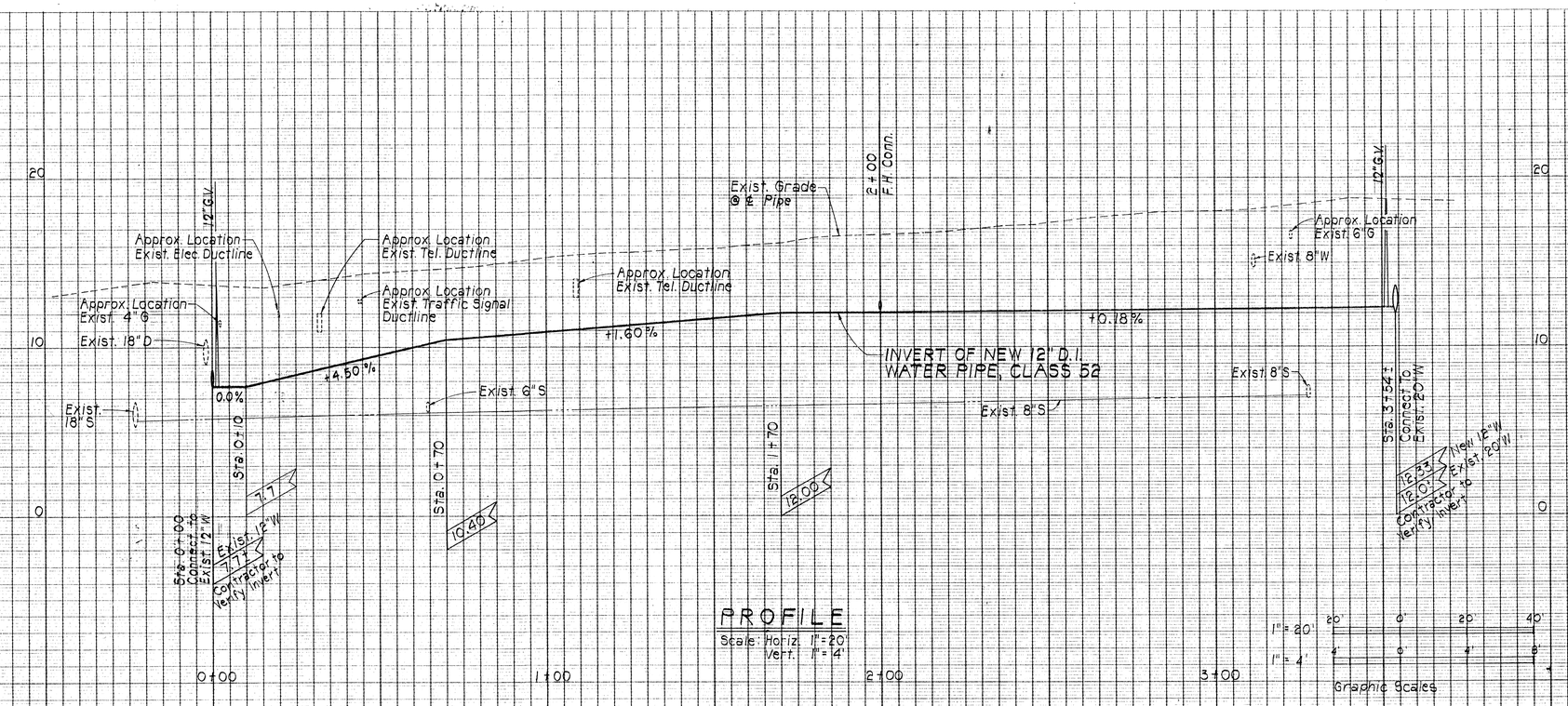

APPROVED:

CHIEF, PLNG. & ENGR., B.W.S. — DATE 12/6/89

CHIEF, DIV. OF WWM, D.P.W. — DATE 5/18/89

CHIEF, DIV. OF ENGINEERING, D.P.W. (FOR CONSTRUCTION WITHIN CITY R/W ONLY) — DATE 6/21/89

EXISTING C & C STREET

REVISION	DATE	BRIEF	BY	APPROVED

R. M. TOWILL CORPORATION
PLANNERS · ENGINEERS · SURVEYORS · PHOTOGRAMMETRISTS
CONSTRUCTION MANAGERS

ANDREW S. H. YOUNG
REGISTERED PROFESSIONAL ENGINEER
No. 3909-C
HAWAII, U.S.A.

THIS WORK WAS PREPARED BY ME OR UNDER MY SUPERVISION
Andrew Young
Signature

AUSTIN, TSUTSUMI, & ASSOC., INC.
ENGINEERS · SURVEYORS · HAWAII · GUAM

HAWAII COMMUNITY DEVELOPMENT AUTHORITY
STATE OF HAWAII

KAKA'AKO COMMUNITY DEVELOPMENT DISTRICT
IMPROVEMENT DISTRICT 3

VICTORIA STREET
WATER MAIN
PLAN AND PROFILE

ENGINEER: RHS — CHECKED BY: ASHY
DRAFTSMAN: MY, RC — DATE
APPROVED:
EXECUTIVE DIRECTOR, HAWAII COMMUNITY DEVELOPMENT AUTHORITY

AS BUILT

FILE	POCKET	FOLDER	NO.

GAS LINE

PLAN
Scale: 1"=20'

NOTES:
1. Salvage All Existing Water Valves & Meter Box Frames & Covers For BWS After Relocation Of Water Meters (Sta. 11+42, Sta. 12+62, Sta. 13+39 and Sta. 13+62) To New Locations.
2. Existing Building Renovation To Be Done By Others. See Separate Architectural Drawings.
3. Sidewalk Culvert to be Maintained by Property Owner.
4. Demolish existing Water Manholes at Sta. 13+81 and Sta. 14+38.

PROFILE
SCALE: Horiz. 1"=20'
Vert. 1"=4'

APPROVED:

CHIEF, DIV. OF TRAFFIC ENGR., D.O.T.S.	DATE
CHIEF, PLNG. & ENGR., B.W.S.	DATE 12/6/89
CHIEF, DIV. OF W.W.M., D.P.W.	DATE 5/8/89
CHIEF, DIV. OF ENGINEERING, D.P.W.	DATE 6/21/89

PROPOSED C & C STREET

REVISION	DATE	BRIEF	BY	APPROVED

R. M. TOWILL CORPORATION
PLANNERS · ENGINEERS · SURVEYORS · PHOTOGRAMMETRISTS
CONSTRUCTION MANAGERS

ANDREW S. H. YOUNG
REGISTERED PROFESSIONAL ENGINEER
No. 3909-C
HAWAII, U.S.A.

THIS WORK WAS PREPARED BY ME OR UNDER MY SUPERVISION
Andrew Young
Signature 10-31-84

AUSTIN, TSUTSUMI, & ASSOC., INC.
ENGINEERS · SURVEYORS · HAWAII · GUAM

HAWAII COMMUNITY DEVELOPMENT AUTHORITY
STATE OF HAWAII
KAKA'AKO COMMUNITY DEVELOPMENT DISTRICT
IMPROVEMENT DISTRICT 3

COOKE STREET
STA. 10+68.62 TO STA. 14+52
PLAN AND PROFILE

ENGINEER: RHS
CHECKED BY: ASHY
DRAFTSMAN: MY, RO
DATE:
APPROVED:
EXECUTIVE DIRECTOR, HAWAII COMMUNITY DEVELOPMENT AUTHORITY

AS BUILT 1-30-92

SHEET 11A OF 117

FILE	POCKET	FOLDER	NO.

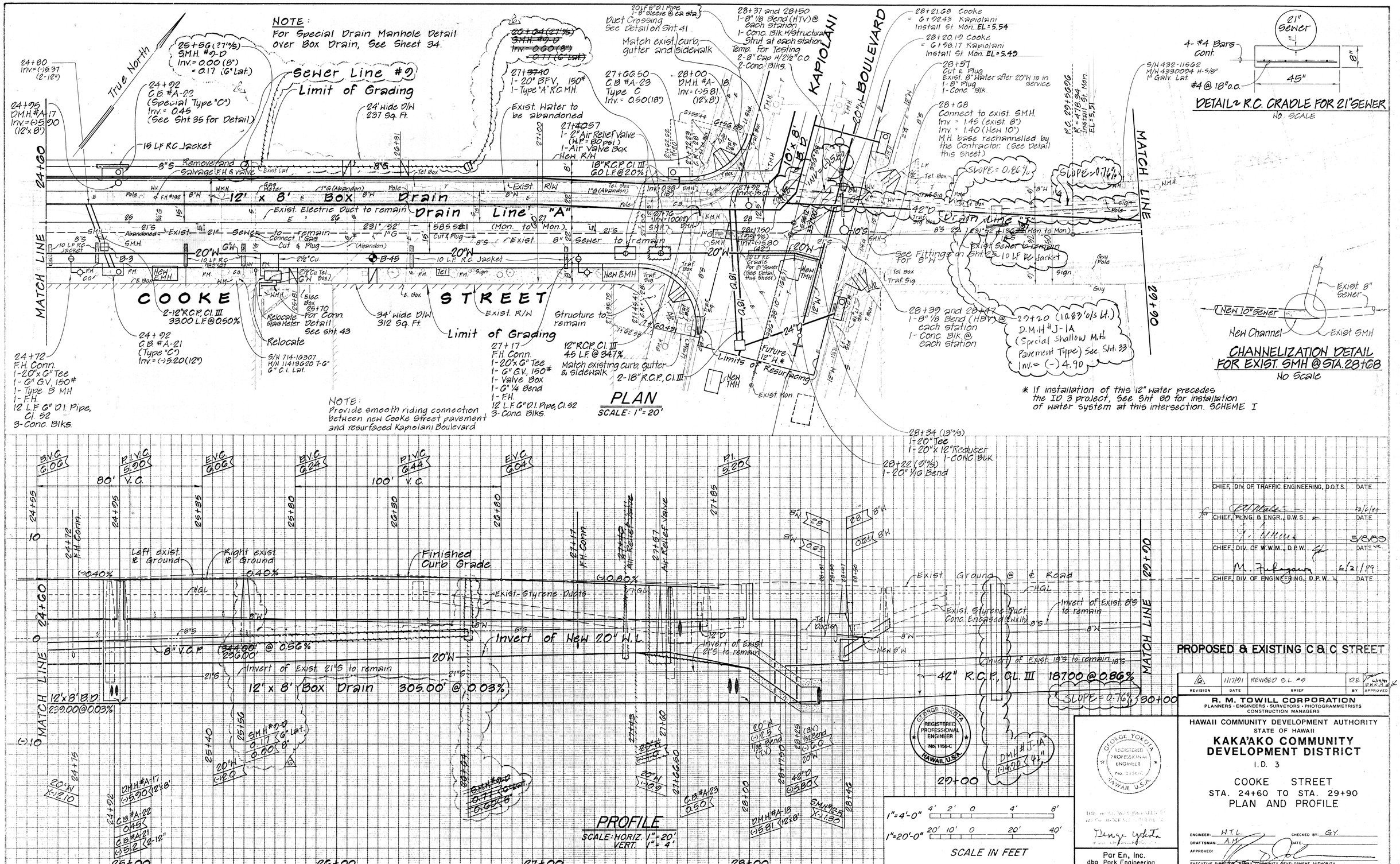

CHIEF, DIV. OF TRAFFIC ENGINEERING, D.O.T.S. DATE

CHIEF, PLNG. & ENGR., B.W.S. DATE 12/6/89

CHIEF, DIV. OF W.W.M., D.P.W. DATE 5/8/89

CHIEF, DIV. OF ENGINEERING, D.P.W. DATE 6/21/89

PROPOSED & EXISTING C & C STREET

REVISION	DATE	BRIEF	BY	APPROVED
6	1/17/91	REVISED S.L. #9	DE	6/19/91

R. M. TOWILL CORPORATION
PLANNERS · ENGINEERS · SURVEYORS · PHOTOGRAMMETRISTS
CONSTRUCTION MANAGERS

HAWAII COMMUNITY DEVELOPMENT AUTHORITY
STATE OF HAWAII

KAKA'AKO COMMUNITY DEVELOPMENT DISTRICT

I.D. 3

COOKE STREET
STA. 24+60 TO STA. 29+90
PLAN AND PROFILE

GEORGE YOKOTA REGISTERED PROFESSIONAL ENGINEER No. 1156-C HAWAII, U.S.A.

Par En, Inc.
dba Park Engineering

ENGINEER: W.T.L. CHECKED BY: G.Y.
DRAFTSMAN: A.M. DATE:
APPROVED:
EXECUTIVE DIRECTOR, HAWAII COMMUNITY DEVELOPMENT AUTHORITY

AS BUILT 1-30-92 SHEET 14 OF 117

GAS LINE

℄ CURVE DATA
Δ = 19°22'
Δ/2 = 9°41'
R = 478.34
T = 81.62
C = 160.92
Lc = 161.68

P.T. 31+18.64
℄ R = 478.34
to ℄ Horiz. at ℄ Hom.
EL = 6.28

Exist. sewer lines to remain

29+90

30+04 (4.5'/s)
D.M.H. # J-1
(Special Shallow M.H. Pavement Type) See Sht. 33
Inv. = 1.08 (18")
= (-) 4.19 (42"& 36")

S/N 432-11610
M/N 82040045 GN-1"
1¼" Galv. Lat.

31+21 (8'/s)
D.M.H. # J-2
(Shallow M.H. Pavt. type)
Inv. = (-) 3.90 (36"& 30")

Proposed 1" Gas Line
(Relocation work to be done by Gasco, Inc and paid for by the Contractor.)

32+03
C.B. # J-3
Type C
Inv. = (-) 2.00 (18")

12" minimum clearance between New C.B and exist. 8" Water.

18" R.C.P. CL. III
10 L.F. @ 2.00%

S/N 432-11706
M/N 56621G4 H-4"
4" C.I. Lat.

G-8" PVC Ducts

KING STREET

MATCH LINE

Sign
Guy Pole
Guy
E.M.H.
Exist 8" G Lat.
10 L.F. R.C. Jacket
36" R.C.P.
18" R.C.P. CL. III
24 L.F. @ 1.00%
G-5" PVC Ducts (Mon. To Mon.)
4-8" PVC Ducts
Future detector check
S/N 432-11588
M/N 22252889 T-2"
30+12
C.B. # J-1
Type C
Inv. = 1.32 (18")
31+21
C.B. # J-2
Type C
Inv. = (-) 2.50 (18")
18" R.C.P. CL. III
25 L.F. @ 0.20%
32+03 (8'/s)
D.M.H. # J-3
Inv. = (-) 3.70 (30"& 24")
= 1.80 (18")
32+35.50
C.B. # J-4 W/ 4' Transition both sides
Type C
Inv. = (-) 1.50 (24")
= (-) 3.47 (24")
Exist. G-5" & 4-8" PVC Ducts
Install 4'-0" Special Gutter Transition
33+35
C.B. # J-5
Type C
Inv. = (-) 0.05 (24")
S/N 432-11658
M/N 55927J1 T-5/8"
1¼" Galv. Lat.
34+05.05
Install St. Mon.
EL = 8.43
ST. MON. EL = 8.57
Exist Mon.
Traf. Sig.
Traf. Box
Tel. Box
E. Box
F.H. Box
Pole
1"G
34"G
4"G
4-8" PVC Ducts
100 KV LINE
8"W
8"H
8"S
10"S
12"S
18"S
24"D
30"D
N.V.
W.M.
S.M.H.
W.M.H.
F.H. #130
F.H. #131
True North

PLAN
SCALE: 1" = 20'

Exist. 8"S to remain
Invert of Exist. 8"S to remain
Invert of Exist. 18"S to remain
10 L.F. R.C. Jacket
33" R.C.P. CL. III 116.00' @ 0.25%
30" R.C.P. CL. III 82.00' @ 0.24%
24" R.C.P. CL. III 38.00' @ 0.61%
24" R.C.P. CL. III 89.00' @ 1.63%
Exist. G-5" & 4-8" Schedule 40 Conc. Encased Ducts
Exist. Ground @ ℄
H.G.L.
Exist. 7'-2" x 16'-0" Electrical Manhole #G08B
MATCH LINE
30+12
30+04
31+21
32+03
32+35.50
33+35
C.B. # J-1 Type C 1.32 (18")
D.M.H. # J-1 Type C 1.08 (18") (-) 4.19 (42"& 36")
C.B. # J-2 Type C (-) 2.50 (18")
D.M.H. # J-2 Type C (-) 3.90 (36"& 30")
C.B. # J-3 Type C (-) 2.00 (18")
D.M.H. # J-3 Type C 1.80 (18") (-) 3.70 (30"& 24")
C.B. # J-4 Type C (-) 1.50 (24") (-) 3.47 (24")
C.B. # J-5 Type C (-) 0.05 (24")
29+00
30+00
31+00
32+00
33+00
34+00
35+00

PROFILE
SCALE: HORIZ. 1" = 20'
VERT. 1" = 4'

1" = 4'-0" 4' 2' 0 4' 8'
1" = 20'-0" 20' 10' 0 20' 40'
SCALE IN FEET

GEORGE YOKOTA REGISTERED PROFESSIONAL ENGINEER No. 1156-C HAWAII, U.S.A.

CHIEF, DIV. OF TRAFFIC ENGINEERING, D.O.T.S. DATE
for CHIEF, PLNG. & ENGR., B.W.S. 12/6/89 DATE
CHIEF, DIV. OF W.W.M., D.P.W. 5/8/90 DATE
CHIEF, DIV. OF ENGINEERING, D.P.W. 6/21/89 DATE

THIS WORK WAS PREPARED BY ME OR UNDER MY SUPERVISION.
GEORGE YOKOTA
PARK ENGINEERING, INC.
Par En, Inc.
dba Park Engineering

EXISTING C & C STREET

REVISION	DATE	BRIEF	BY	APPROVED

R. M. TOWILL CORPORATION
PLANNERS · ENGINEERS · SURVEYORS · PHOTOGRAMMETRISTS
CONSTRUCTION MANAGERS

HAWAII COMMUNITY DEVELOPMENT AUTHORITY
STATE OF HAWAII

KAKA'AKO COMMUNITY DEVELOPMENT DISTRICT
I.D. 3

COOKE STREET
STA. 29+90 TO KING ST.
PLAN AND PROFILE

ENGINEER: W.T.L. CHECKED BY: G.Y.
DRAFTSMAN: A.M. DATE:
APPROVED:
EXECUTIVE DIRECTOR, HAWAII COMMUNITY DEVELOPMENT AUTHORITY

AS BUILT 1-30-92

FILE	POCKET	FOLDER	NO.

SHEET 15 OF 117

* 10-Ft. Transition from 1/4":12" to Match Grade. (1)

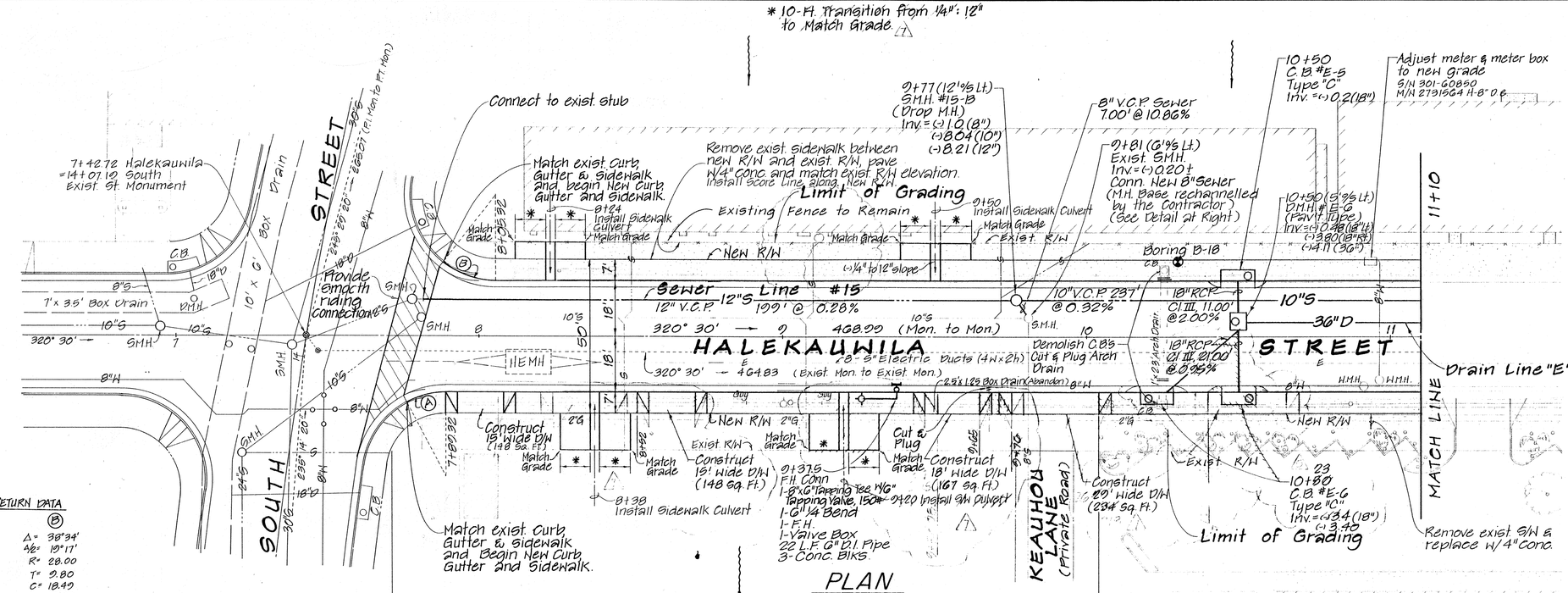

PLAN
SCALE: 1"=20'

CURB RETURN DATA

(A)	(B)
Δ = 26°30'	Δ = 38°34'
4/R = 13°26'	4/R = 19°17'
R = 28.00	R = 28.00
T = 6.68	T = 9.80
C = 12.99	C = 18.49
Lc = 13.11	Lc = 18.85

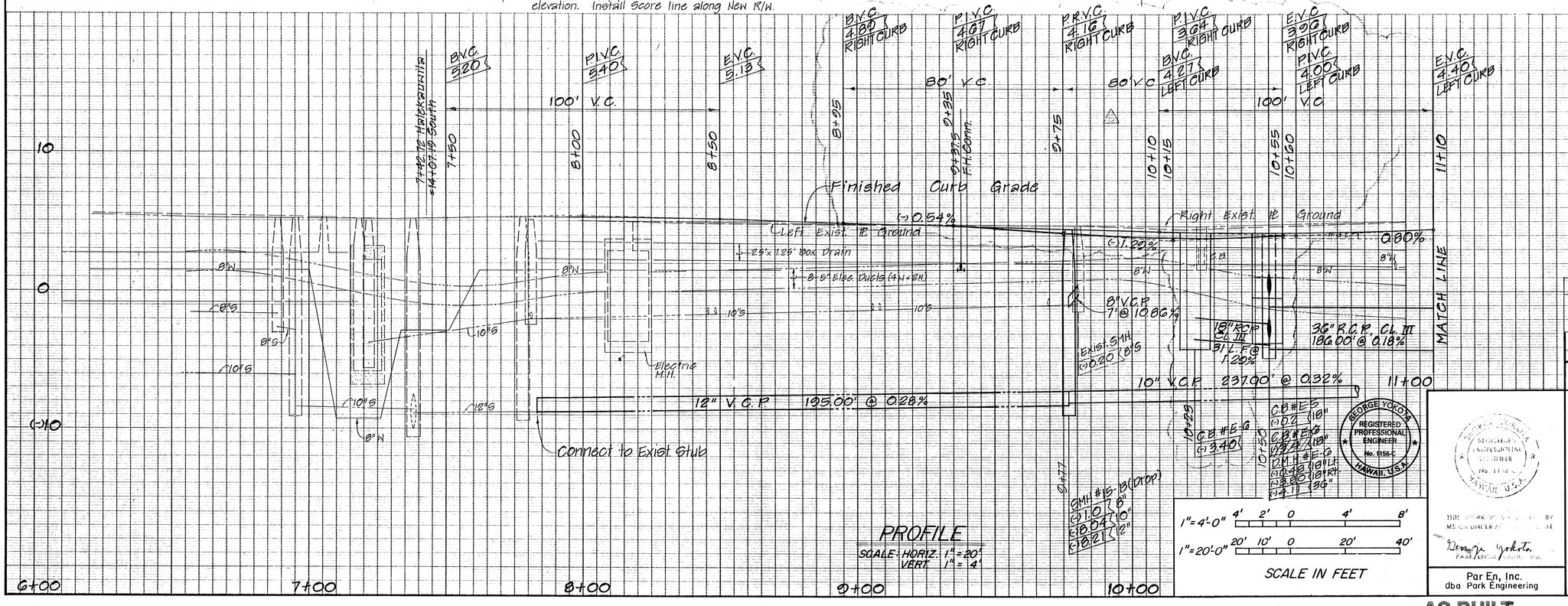

PROFILE
SCALE: HORIZ. 1"=20'
VERT. 1"=4'

1"=4'-0" 4' 2' 0 4' 8'
1"=20'-0" 20' 10' 0 20' 40'
SCALE IN FEET

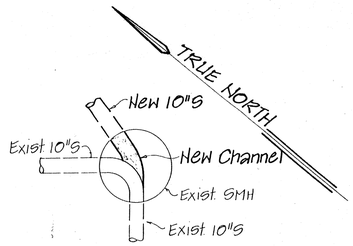

CHANNELIZATION OF EXIST. S.M.H. AT STA. 9+81

No Scale

APPROVED

CHIEF, DIV OF TRAFFIC ENGINEERING, D.O.T.S.	DATE
for CHIEF, PLNG. & ENGR., B.W.S.	DATE 12/6/89
CHIEF, DIV. OF W.W.M., D.P.W.	DATE 5/8/89
CHIEF, DIV. OF ENGINEERING, D.P.W.	DATE 6/21/89

REVISION	DATE	BRIEF	BY	APPROVED
1	3/14/91	REVISED DRY LOCATION & NOTES DELETE SIDEWALK CULVERT	D.E.	
2	11/15/90	Revised right curb profile and drain line	G.Y.	DOE 4-11-91

PROPOSED C & C STREET
EXISTING C & C STREET

R. M. TOWILL CORPORATION
PLANNERS · ENGINEERS · SURVEYORS · PHOTOGRAMMETRISTS
CONSTRUCTION MANAGERS

HAWAII COMMUNITY DEVELOPMENT AUTHORITY
STATE OF HAWAII

KAKA'AKO COMMUNITY DEVELOPMENT DISTRICT

I.D. 3

HALEKAUWILA STREET
SOUTH ST. TO STA. 11+10
PLAN AND PROFILE

REGISTERED PROFESSIONAL ENGINEER No. 1156-C HAWAII, U.S.A. GEORGE YOKOTA

THIS WORK WAS PREPARED BY ME OR UNDER MY SUPERVISION

Par En, Inc. dba Park Engineering

ENGINEER: C.O. CHECKED BY: G.Y.
DRAFTSMAN: A.M. DATE:
APPROVED: EXECUTIVE DIRECTOR, HAWAII COMMUNITY DEVELOPMENT AUTHORITY

FILE	POCKET	FOLDER	NO.

AS BUILT SHEET 16 OF 117

GAS LINE

CHIEF, DIV. OF TRAFFIC ENGINEERING, D.O.T.S. DATE

for CHIEF, PLNG. & ENGR., B.W.S. 12/6/89 DATE

CHIEF, DIV. OF W.W.M., D.P.W. 5/8/89 DATE

M. Fukagawa 6/21/89
CHIEF, DIV. OF ENGINEERING, D.P.W. DATE

Revision	Date	Brief	By	Approved
6	1/17/91	RELOCATE FIRE HYDRANT	DE	BWS
6	1/17/91	REVISED CURB RETURNS	DE	DTS DOE
3	10/9/90	REVISED CURB RETURN ELIMINATED DRIVEWAY	G.Y.	PH 11/15/90

PROPOSED C & C STREET
EXISTING C & C STREET

R. M. TOWILL CORPORATION
PLANNERS · ENGINEERS · SURVEYORS · PHOTOGRAMMETRISTS
CONSTRUCTION MANAGERS

HAWAII COMMUNITY DEVELOPMENT AUTHORITY
STATE OF HAWAII

KAKA'AKO COMMUNITY DEVELOPMENT DISTRICT
I.D. 3

HALEKAUWILA STREET
STA. 11+10 TO STA. 15+50
PLAN AND PROFILE

GEORGE YOKOTA REGISTERED PROFESSIONAL ENGINEER No. 1156-C HAWAII, U.S.A.

THIS WORK WAS PREPARED BY ME OR UNDER MY SUPERVISION.
PARK ENGINEERING, INC.
Par En, Inc. dba Park Engineering

ENGINEER: C.O. CHECKED BY: G.Y.
DRAFTSMAN: A.H. DATE:
APPROVED:
EXECUTIVE DIRECTOR, HAWAII COMMUNITY DEVELOPMENT AUTHORITY

AS BUILT 1-30-92

SHEET 17 OF 117

FILE	POCKET	FOLDER	NO.

GAS LINE

CHIEF, DIV. OF TRAFFIC ENGINEERING, D.O.T.S.	DATE
for [signature] CHIEF, PLNG & ENGR., B.W.S.	12/6/89 DATE
[signature] CHIEF, DIV. OF W.W.M., D.P.W.	5/8/89 DATE
M. Fukagawa CHIEF, DIV. OF ENGINEERING, D.P.W.	6/21/89 DATE

PROPOSED C & C STREET

REVISION	DATE	BRIEF	BY	APPROVED
6	1/17/91	REVISED S.L. #8	D.E.	6/19/91 C.W.W.M.
2	12/21/90	DELETED CURB, SIDEWALK, DWY. MOVED DRIVEWAY		DTS
1	9/7/89	DELETE CURB RETURN ~ INSTALL STD. DRIVEWAY APRON		DOE 9-14-89

R. M. TOWILL CORPORATION
PLANNERS · ENGINEERS · SURVEYORS · PHOTOGRAMMETRISTS
CONSTRUCTION MANAGERS

GEORGE YOKOTA REGISTERED PROFESSIONAL ENGINEER No. 1130-C HAWAII, U.S.A.

THIS WORK WAS PREPARED BY ME OR UNDER MY SUPERVISION.

George Yokota
PARK ENGINEERING, INC.

Par En, Inc.
dba Park Engineering

HAWAII COMMUNITY DEVELOPMENT AUTHORITY
STATE OF HAWAII

KAKA'AKO COMMUNITY DEVELOPMENT DISTRICT

I. D. 3

HALEKAUWILA STREET
P.C. STA. 19+69.57 TO KOULA ST.
PLAN AND PROFILE

ENGINEER: C.O. CHECKED BY: G.Y.
DRAFTSMAN: A.M. DATE:
APPROVED: [signature]
EXECUTIVE DIRECTOR, HAWAII COMMUNITY DEVELOPMENT AUTHORITY

AS BUILT 1-30-92

SHEET 19 OF 117

FILE	POCKET	FOLDER	NO.

TRUE NORTH

(-)0+15
Connect to Exist. 20" Wtr.
1-20" 1/4 Bend
1-Conc. Blk. W/Struct Struts
8 L.F. 20" D.I. Pipe, Cl. 52
1-20" Sleeve, 15" Long
Temp. for Testing
1-20" Cap W/4" C.O.
1-Conc. Blk.

0+10
Special D.M.H. #A-24
Inv.=2.5 (48"x32" Exist. Arch Drain)
=(-) 2.0 (New 42")
See Det. on Sht. 30.

0+00
1-2" ARV
(WP=80psi)
1-Air Valve Box

1+73 (11'% Rt.)
D.M.H. #A-22
Inv.=(-)5.01
(10'x8' Box)

2+01
C.B. #A-32
Type "C"
Inv.=(-) 0.8 (18")

(-)2+21.63±
Connect to Exist.
6.5'x6.0' Box Drain
Inv.=(-) 2.12 (±)
See Detail on Sht. 30

Abandon 6" Sewer

Cut & Plug

Cut & Plug Exist. 20" Water and Abandon

Connect 18" RCP to 6.5'x6.0' BD.
Inv.= 2.76

(-)1+70 (2'% Lt.)
D.M.H. # A-26
Inv.=(-)4.50 (6.5'x6.0' Box)

Install 17 L.F. R.C. Jacket

0+00 "Kapiolani"
=20+90.88 "South"
Install St. Mon.

6.5'x6.0' Box Drain

Boring B-2

Conc. Jacket to Pipe Joint

(See Sht. 26 for Crossing Detail)

Install 23 L.F. R.C. Jacket (See Sht. 28 for Detail)

Conc. Jacket to Pipe Joint (Both Ends)

Duct Crossing (See Detail on Sht. 39 & 41)

0+55 (9'% Rt.)
Def. Line

0+38 (10.5'% Lt.)
D.M.H. #A-25
Inv.=3.45

Connect to Exist. Sewer Stub

0+63
1-20" BFV, 150#
1-Type "A" R.C. MH

0+86
1-8" ARV
(WP=80psi)
1-Air Valve Box

1+00 (9% 17')
Def. Line

42" R.C.P. Cl. III 35' @ 0.20%

18" R.C.P. Cl. III 20' @ 23.75%

Limits of Resurfacing

10"S Sewer Line #12
336°53' — 602.43' (Mon. to Mon.)

10"V.C.P. 337.00 @ 0.51%

Inv.=(-)1.3 (18")

Inv.=(-)1.07 (18")

10'x8' Box Drain

Inv.=(-)3.0 (42")

Drain Line "A"

Inv.=(-)4.2 (18")

Drain to be Abandoned

Limits of Resurfacing

18" R.C.P. Cl. III 20' @ 1.0%

Abandon 5'x3' Box Drain

Boring B-1

18" R.C.P. Cl. III 35' @ 0.57%

12" Water to be abandoned

Remove Temporary Connection and extend 8'x4' Box Drain.

NOTE:
For Special Drain Manhole Detail over Reinforced Conc. Box, See Sheet 34.

NOTE:
THE THICKNESS OF A.C. RESURFACING SHALL BE 1"

PLAN
SCALE: 1"=20'

KING STREET

SOUTH STREET

KAPIOLANI BOULEVARD

MATCH LINE 2+50

S/N 7A-14761
W/H 23/7909.107
M/N 23/7922.107
TWO "E" Lot.

Existing Pavement along ℄ Box Drain

Exist. 6.5'x6.0' Box Drain

6.5'x6.0' Box Drain
51.63 @ 4.01%

6.5'x6.0' Box Drain
145.50' @ 0.15%

Connect to exist. 20" Water Contractor to verify invert

10'-0" Transition
6.5'x6.0' B.D. to
10'x6.0' B.D.

Connect to Exist. Sewer Stub

Existing Conc. Encased Tel. Ducts (Mauka)

Electric Ducts

Tel. Ducts

Electric & Tel. Crossings See Detail on sheet 40.

Electric M.H.

10'x8' Box Drain
525.00' @ 0.15%

10" V.C.P. 337.00' @ 0.51%

Conc. Encased Tel. Ducts (Mauka)

Conn. to exist. 6.5'x6.0' Box

D.M.H. #A-26
(-)4.50 (6.5'x6.0' Box)

D.M.H. #A-25
3.45 (18")

D.M.H. #A-23
(-)4.78 (10'x8' Box)

Special D.M.H. #A-24
2.5 (Exist. 48"x32" Arch Drain)
(-)2.0 (42" Drain)

(-)4.77 (10'x8' Box)

C.B. #A-33
(-)4.0

D.M.H. #A-22
(-)5.01 (10'x8' Box)

C.B. #A-32
(-)0.8 (18")

PROFILE
SCALE: HORIZ. 1"=20'
VERT. 1"=4'

1"=4'-0" 4' 2' 0 4' 8'
1"=20'-0" 20' 10' 0 20' 40'
SCALE IN FEET

CHIEF, DIV. OF TRAFFIC ENGR., D.D.T.S. — DATE

for CHIEF, PLNG. & ENGR., B.W.S. — DATE 10/6/89

CHIEF, DIV. OF W.W.M., D.P.W. — DATE 5/8/89

CHIEF, DIV. OF ENGINEERING, D.P.W. — DATE 6/21/89

EXISTING C & C STREET

REVISION	DATE	BRIEF	BY	APPROVED

R. M. TOWILL CORPORATION
PLANNERS · ENGINEERS · SURVEYORS · PHOTOGRAMMETRISTS
CONSTRUCTION MANAGERS

GEORGE YOKOTA
REGISTERED PROFESSIONAL ENGINEER
No. 1156-C
HAWAII, U.S.A.

Par En, Inc.
dba Park Engineering

HAWAII COMMUNITY DEVELOPMENT AUTHORITY
STATE OF HAWAII

KAKA'AKO COMMUNITY DEVELOPMENT DISTRICT

I. D. 3

KAPIOLANI BOULEVARD
KING STREET TO STATION 2+50
PLAN AND PROFILE

ENGINEER: W.T.L.
DRAFTSMAN: R.O.
APPROVED:
EXECUTIVE DIRECTOR, HAWAII COMMUNITY DEVELOPMENT AUTHORITY
CHECKED BY: G.Y.
DATE:

FILE	POCKET	FOLDER	NO.

AS BUILT SHEET 24 OF 117

3+14
F.H. Conn.
1- 20"x 6" Tee
1- 6" G.V., 150#
1- Valve Box
1- F.H.
15 L.F. 6" D.I. Pipe, Cl. 52
2- Conc. Blks

2+95
C.B. #A-30
Type "C"
I.V. = (-) 0.0 (18")

3+48 (11'9⅝ Lt.)
S.M.H. #12-P
(Shallow Drop)
Inv. = 0.01 (Exist. 8")
Inv. = (-) 2.5 (10")
Cutting of exist. sewer by the Contractor.

3+81 (5'9⅝ Rt.)
D.M.H. #A-20
Inv. = (-) 5.32 (10'x 8' Box)

Cut and Plug Exist. 6" Water at Main
1- 6" Cap W/Hub Clamp and Strongback
1- Conc. Blk.
Salvage G.V. & Demolish Manhole

4+47
C.B. #A-28
Type "D"
I.V. = (-) 5.32 (18")

5+08
1- 20"x 8" Tee
1- 8" G.V., 150#
1- Valve Box
1- Conc. Blk.

5+52
C.B. #A-26
Type "C"
I.V. = (-) 5.4 (18")

6+17
F.H. Conn.
1- 20"x 6" Tee
1- 6" G.V., 150#
1- Valve Box
1- F.H.
15 L.F. 6" D.I. Pipe, Cl. 52
2- Conc. Blk.

Remove & Salvage F.H. & Valve

6+44
C.B. #A-25
Type "C"
I.V. = (-) 5.10

10 L.F. R.C. Cradle (See Detail at right)

10" V.C.P. 22.00' @ 11.5%

True North

6+80
S.M.H. #12-R
Inv. = (-) 1.3 (10")

7+45
1-12" G.V., 150#
1-Valve Box

28 L.F. R.C. Jacket for 12" W

7+30
C.B. #A-24
Type "C"
I.V. = (-) 2.00 (24")

2'W x 10'L x 8"H

New 10" V.C. Sewer

8" 40# Felt

4-#4

#4 @ 18" o.c.

New 42" RCP

NOTE:
Cradle Detail similar for exist. 8" Sewer over New 18" RCP and New 6" Sewer over New 48" RCP

To be abandoned
6 cone. Thrust Beam
24" R.C.P. Cl. III
50 L.F. @ 4.00%

DETAIL of R.C. CRADLE FOR 10" SEWER
Scale: ½" = 1'-0"

Future 12" Water *

336° 38' 10" — 165.71 (New Mon. to Exist. Mon.) — Exist. Mon.

NOTE:
THE THICKNESS OF A.C. RESURFACING SHALL BE 1"

STA. 2+50

MATCH LINE

KAPIOLANI BOULEVARD

Limits of Resurfacing

20"W

10"S

10" V.C.P. Sewer Line #12 301' @ 0.33%

18" R.C.P. Cl. III, 35' @ 0.20%

18" R.C.P. Cl. III, 35' @ 0.20% Sewer Line #12

12 L.F. Plain Conc. Jacket

Cut & Plug

3 336° 53' — 692.43 (Mon. to Mon.) 4

Inv. = (-) 1.0' (18")

Inv. = (-) 5.42 (18")

Inv. = (-) 5.5 (18")

Inv. = (-) 5.2 (18")

10' x 8' Box Drain

Drain Line "A"

8'

Remove & Salvage Valve & Valve Box

Cut & Plug 1-8" Plug 1-Conc. Blk.

10 L.F. R.C. Jacket 1"G (Abandoned)

Inv. = (-) 5.31

G3 L.F. R.C. Jacket for 20"W

G+98.17 Kapiolani = 28+20.19 Cooke Install St. Mon. EL = 5.43

G+98.17 Kapiolani 28+12.68 Cooke Install St. Mon. EL = 5.54

30"D

18"D

Limits of Resurfacing

7+57 (10'⅝ Rt.)
D.M.H. #A-18a
Inv. = (-) 4.90 (2-18" & 30")
= (-) 4.00 (24")

2-18" R.C.P. Cl. III
67 L.F. @ 1.36%

7+95
End 12" Water
1-12" Cap W/4" C.O.
1-Conc. Blk.

Match Exist. Curb, Gutter & Sidewalk

G+68
Conn. to exist 8" Water
2-8" ⅛ Bend
1-8" Sleeve, 12" long
8 L.F. 8" D.I. Pipe Cl. 52
2-Conc. Blks
Temp. for Testing
1-8" Cap W/ 2½" C.O.
1-Conc. Blk.

* If installation of this 12" water precedes the ID 3 Project, see sheet 80 for installation of the water system at this intersection. SCHEME I

Cut & Plug — 18" R.C.P. Cl. III, 20' @ 0.5%

Limits of Resurfacing

Remove exist. 8" Sewer to facilitate installation of 10'x 8' Box.

2+85 (5'9⅝ Rt.)
D.M.H. #A-21
Inv. = (-) 5.18 (10'x 8' Box)

2+85
C.B. #A-31
Type "C"
I.V. = (-) 3.5 (18")

Inv. = (-) 3.6 (18")

Inv. = (-) 1.4 (18")

1½" Cu.

Connect to Exist. Services (2)

Boring B-4

3+76
C.B. #A-29
Type "C"
I.V. = (-) 1.3 (18")

10 L.F. R.C. Cradle (See Detail at right)

To be Abandoned

Boring B-2

5+44 (5'9⅝ Rt.)
D.M.H. #A-19
Inv. = (-) 5.56 (10'x 8' Box)

Inv. = (-) 2.6 (18")

See Profile on Sht. 80

5+44
C.B. #A-27
Type "C"
I.V. = (-) 2.5 (18")

To be Abandoned

Sign

Stand Pipe

Match exist. curb, Gutter & Sidewalk

Traf. Sig. Box

2.25' x 1.83' Box Drain (To be abandoned)

G+36
1-20" BFV, 150#
1- Type "A" R.C.M.H.

Connect to Exist. 8" Water
1- 8" ⅛ Bend (Horiz.)
1- 8" ⅛ Bend (V.)
1- 8" Sleeve, 12" long
8 L.F. 8" D.I. Pipe, Cl. 52
1-Conc. Blk. W/Strut Strut
Temporary for Testing
1-8" Cap W/ 2½" C.O.
1-Conc. Blk.

G+49 (11'9⅝ Lt.)
S.M.H. #12-Q
Inv. = (-) 1.5 (10")

G+74
1-20" x 8" Tee
1-Conc. Blk.

Building to remain

12' x 8' Box Drain

22'

60' M

8'

COOKE STREET

NOTE:
For Special Drain Manhole Detail over Reinforced Conc. Box, See Sheet 34.

CURTIS ST.

PLAN
SCALE: 1" = 20'

DEMOLISHED ABANDONED C.B. AS REQUIRED BY CITY & COUNTY DEPARTMENT OF PUBLIC WORKS DIVISION OF ENGINEERING DRAINAGE SECTION

RECONSTRUCTED SIDEWALK

Existing Pavement along ℄ Box Drain

H.G.L.

6"W (To be relocated)

18"D (To be abandoned)

Existing conc. encased telephone ducts (Mauka)

10" V.C.P. 337.00' @ 0.51%

10'x 8' Box Drain 525.00' @ 0.15%

10" V.C.P. 301.00' @ 0.33%

10'x 8' Box Drain 152.00' @ 0.12%

42"D

Relocated 8"W

Exist. 4-4" ⌀ S.P. Crossing Tel. Ducts (Abandoned)

KAISER 8" WATER H.G.L.

Elect. Ducts

Exist. 6-4" I.D. Styrene ducts, conc. encased (3'W x 2'H)

24" R.C.P. Cl. III 5000' @ 4.00%

30" R.C.P. Cl. III

2-18" R.C.P. Cl. III

EXISTING C & C STREET

8+00

7+00

6+00

5+00

4+00

3+00

PROFILE
SCALE: HORIZ. 1" = 20'
VERT. 1" = 4'

1"=4'-0" 4' 2' 0 4' 8'
1"=20'-0" 20' 10' 0 20' 40'
SCALE IN FEET

CHIEF, DIV. OF TRAFFIC ENGR, D.O.T.S. DATE

for CHIEF, PLNG & ENGR., B.W.S. 6/16/89 DATE

CHIEF, DIV. OF W.W.M., D.P.W. 5/6/89 DATE

M. Fukagawa 6/21/89
CHIEF, DIV. OF ENGINEERING, D.P.W. DATE

REVISION	DATE	BRIEF	BY	APPROVED

R. M. TOWILL CORPORATION
PLANNERS · ENGINEERS · SURVEYORS · PHOTOGRAMMETRISTS
CONSTRUCTION MANAGERS

HAWAII COMMUNITY DEVELOPMENT AUTHORITY
STATE OF HAWAII

KAKA'AKO COMMUNITY DEVELOPMENT DISTRICT
I.D. 3

KAPIOLANI BOULEVARD
STATION 2+50 TO COOKE STREET
PLAN AND PROFILE

GEORGE YOKOTA REGISTERED PROFESSIONAL ENGINEER No. 1166-C HAWAII, U.S.A.

THIS WORK WAS PREPARED BY ME OR UNDER MY SUPERVISION

Par En, Inc. dba Park Engineering

ENGINEER: W.T.L. CHECKED BY: G.Y.
DRAFTSMAN: R.Q. DATE:
APPROVED:
EXECUTIVE DIRECTOR, HAWAII COMMUNITY DEVELOPMENT AUTHORITY

FILE	POCKET	FOLDER	NO.

AS BUILT SHEET 25 OF 117

BORING 2

Surface Elevation 8.0±

Soil Description

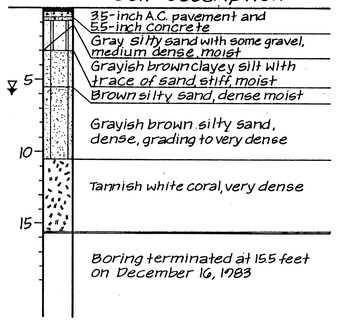

BORING 3

Surface Elevation 7.5±

Soil Description

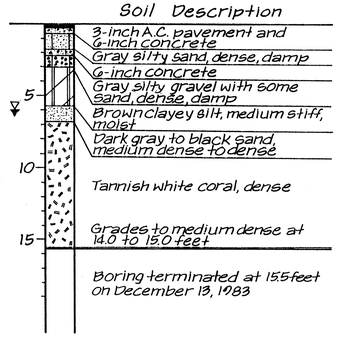

BORING 4

Surface Elevation 6.5'±

Soil Description

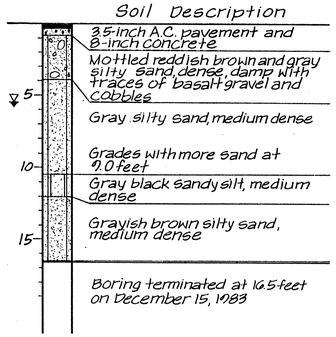

BORING 6

Surface Elevation 5.8'±

Soil Description

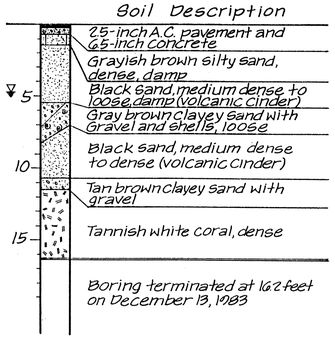

BORING 23

Surface Elevation not available

Soil Description

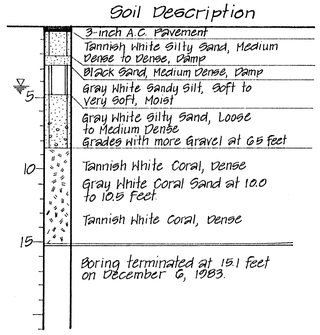

BORING 27

Surface Elevation 4.5'±

Soil Description

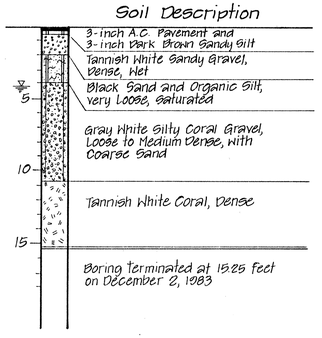

BORING 28

Surface Elevation 4.3'±

Soil Description

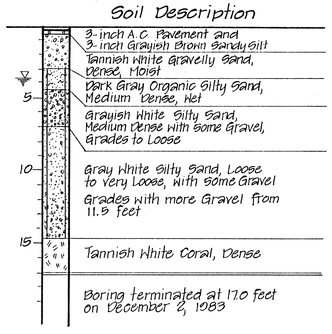

BORING 18

Surface Elevation 4.7'±

Soil Description

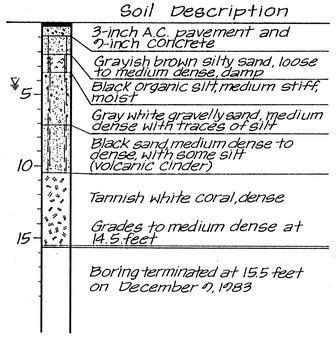

BORING 19

Surface Elevation 4.7'±

Soil Description

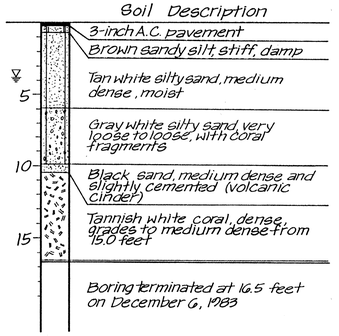

BORING 45

Surface Elevation not available

Soil Description

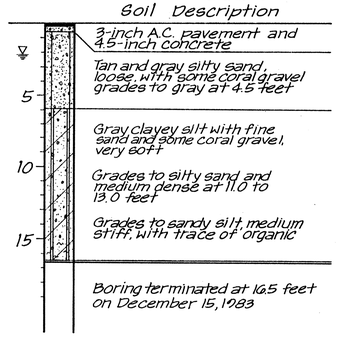

BORING LOG BY GEOLABS - HAWAII (FEB. 1984)

Legend (As shown on construction plans)

- Borings drilled by Geolabs-Hawaii (dated Feb. 1984)
- Borings drilled by Geolabs-Hawaii (dated June 1973)

BORING #1

Surface Elevation +7.0'

Soil Description

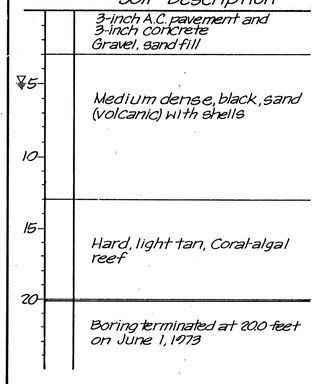

BORING #2

Surface Elevation +6.0'

Soil Description

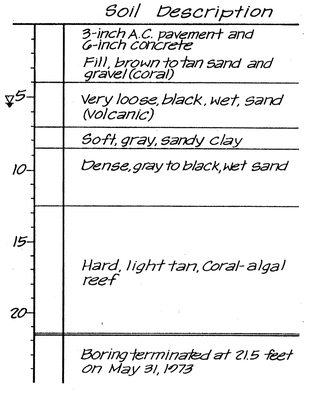

BORING #3

Surface Elevation +6.0'

Soil Description

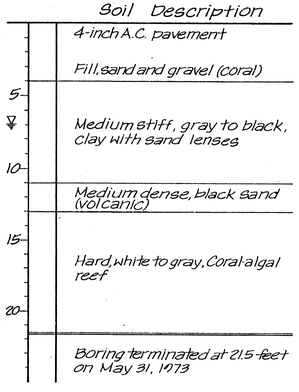

BORING #4

Surface Elevation +5.0'

Soil Description

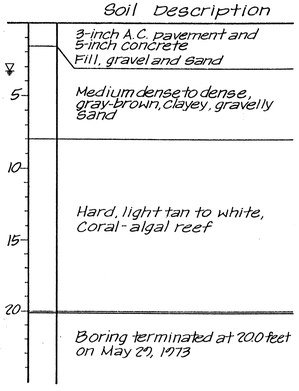

BORING #5

Surface Elevation +5.0'

Soil Description

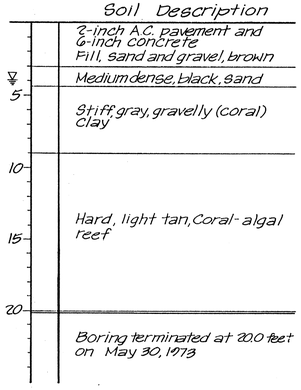

BORING #6

Surface Elevation +6.0'

Soil Description

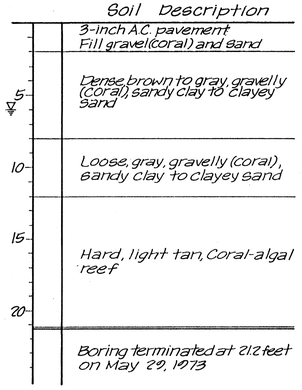

BORING DRILLED BY GEOLABS-HAWAII (JUNE 1973)

GEORGE YOKOTA
REGISTERED PROFESSIONAL ENGINEER
No. 1156-C
HAWAII, U.S.A.

THIS WORK WAS PREPARED BY ME OR UNDER MY SUPERVISION.

George Yokota
PARK ENGINEER

Par En, Inc.
dba Park Engineering

REVISION	DATE	BRIEF	BY	APPROVED

R. M. TOWILL CORPORATION
PLANNERS · ENGINEERS · SURVEYORS · PHOTOGRAMMETRISTS
CONSTRUCTION MANAGERS

HAWAII COMMUNITY DEVELOPMENT AUTHORITY
STATE OF HAWAII

KAKA'AKO COMMUNITY DEVELOPMENT DISTRICT

I.D. 3

BORING LOG

ENGINEER: CHECKED BY: G.Y.
DRAFTSMAN: DATE:
APPROVED:
EXECUTIVE DIRECTOR, HAWAII COMMUNITY DEVELOPMENT AUTHORITY

AS BUILT

FILE	POCKET	FOLDER	NO.

SIGNING AND STRIPING PLAN

Scale: 1" = 20'

12" x 18"

R7-201 12" x 6"

SIGNING PLAN

SCALE: 1" = 20'

METER STANDARD DETAIL

N.T.S.

REVISION	DATE	BRIEF	BY	APPROVED
1	7/12/93	METERED PARKING	DE	PH 9/25/93 DIS

R. M. TOWILL CORPORATION
PLANNERS · ENGINEERS · SURVEYORS · PHOTOGRAMMETRISTS
CONSTRUCTION MANAGERS

HAWAII COMMUNITY DEVELOPMENT AUTHORITY
STATE OF HAWAII

KAKA'AKO COMMUNITY DEVELOPMENT DISTRICT

IMPROVEMENT DISTRICT 3-B

SIGNING AND STRIPING PLAN

ANDREW S. H. YOUNG
REGISTERED PROFESSIONAL ENGINEER
No. 3909-C
HAWAII, U.S.A.

THIS WORK WAS PREPARED BY ME OR UNDER MY SUPERVISION

Signature

AUSTIN, TSUTSUMI, & ASSOC., INC.
ENGINEERS · SURVEYORS · HAWAII · GUAM

APPROVED:

Director, Department of Transportation Services — Date

ENGINEER: BT — CHECKED BY: ASHY

DRAFTSMAN: MY — DATE:

APPROVED:

EXECUTIVE DIRECTOR, HAWAII COMMUNITY DEVELOPMENT AUTHORITY

FILE	POCKET	FOLDER	NO.

AS BUILT SHEET 62A OF 117

AS BUILT SHEET 63 OF 117

STA. 24+60

MATCH LINE

3:30 TO 5:30 PM TOW AWAY EXCEPT SATURDAY SUNDAYS-HOLIDAYS

LOADING ZONE COMMERCIAL VEHICLES WITH PLANT ONLY MON THRU SAT 7 AM - 4 PM EXCEPT TOW AWAY HRS

Remove Existing Signs and Post

Remove Existing Parking Meters Post & Stall Marking

1 HR PARKING 7 AM-6 PM MON THRU SAT EXCEPT TOW AWAY HRS

Remove Existing Sign & Post

1 HR PARKING 7:00 AM TO 3:30 PM EXCEPT SUNDAY, SUNDAY, GATE HOLIDAYS

3:30 TO 5:30 PM TOW AWAY SUNDAY, SUNDAY, GATE HOLIDAYS

Replace

R8-3a 12"x12"

TOW-AWAY ZONE R7-201 12"x6"

R3-8 30"x30"

Install New Signs & Post

Exist. Signs To Remain

NO PARKING ANY TIME EXCEPT SUN

R8-3a 12"x12"

TOW-AWAY ZONE R7-201 12"x6"

Install New Signs on Street Light Standard

COOKE STREET

STA. 25+65

100' Reverse Curve

14'

10'

10'

10'

60'

4" Double Solid Yellow Stripe

Type "D" Pavt Markers 20' o.c

8" Channelizing Line

4" White Stripes

Type "D" Pavement Markers

15'

15'

ONLY

ONLY

PM PM PM PM PM PM PM PM PM PM PM PM PM

Remove Exist. Sign & Post

NO PARKING 3 MINUTE PASSENGER LOADING ZONE 7:00 AM TO 3:30 PM EXCEPT SAT SUN - HOLIDAY EXCEPT 10 AM AWAY HRS

NO PARKING CORNER TO HERE

Install Sign & Post

Remove Existing Sign & Post

R3-8 30"x30"

ONLY ONLY

Install New Sign and Post

R8-3a 12"x 12"

TOW-AWAY ZONE R7-201 12"x6"

Install New Signs and Post

KAPIOLANI BLVD

TS

TS

TS

TS

TS

10' Wide Crosswalks*

12" Stop Bar

12" Stop Bar

4" Channelizing Line

10' Wide Crossings*

4" White Guide Lines

18" Channelizing Line

ONLY

10'

16'

14'

50'

50'

STA. 26+30

Remove exist. "EXCEPT SUNDAY" Sign

Exist Signs To Remain

NO PARKING ANY TIME EXCEPT SUN

R7-1 12"x18"

NO PARKING HERE TO CORNER

Install New Sign & Post

50' Reverse Curve

Type "D" Pavt. Markers

4" Double Solid Yellow Stripe

10 Min. 8 AM

Remove Exist Stall Markings

R8-3a 12"x 12"

Install New Sign and Post

1 HR PARKING 7:00 AM TO 6:00 PM EXCEPT SUNDAYS AND GATE HOLIDAYS

Relocate Existing Sign & Remove Post

Install New Sign on St. Lite

Remove Stall 8 P.M.

NO PARKING CORNER TO HERE

R7-1 12"x18"

Install New Sign & Post (Above Relocated Sign)

TRUE NORTH

MATCH LINE

STA. 30+70

STA. 30+70

COOKE STREET

Type "D" Pavement Markers

4" Yellow Stripes

18' Typ.

8'

18'

18'

18'

18'

STA 31+40

18"

8"

PM PM PM PM PM PM PM SL PM SL

Remove exist post and signs

Remove Exist Parking Meters and Install New Parking Meters

NOTE: Remove all existing conflicting striping, stall markings and legends.

1 HR PARKING 7:00 AM TO 6:00 PM EXCEPT SUNDAYS AND GATE HOLIDAYS

NO PARKING ANY TIME BEGIN

Relocate Existing Signs Install New Post Install New Signs & Post

NO PARKING ANY TIME END

Existing Sign

1 HR PARKING 7:00 AM TO 6:00 PM EXCEPT SUNDAYS AND GATE HOLIDAYS

Remove existing sign EXISTING SIGN and install New Sign on Exist. Post

NO PARKING HERE TO CORNER

Existing Sign

"Stop" Legend

STOP

Existing Sign

* New C&C Hon. Standard Crosswalk

Exist Signs To Remain

NO PARKING ANY TIME EXCEPT SUN

KING ST.

10' Wide Crosswalk*

12" Stop Bar

ONLY

STA. 31+40

22'

12'

Min.

10'

1"=20'-0" 20' 10' 0 20' 40'

SCALE IN FEET

CHIEF, DIV OF TRAFFIC ENGR., D.O.T.S. DATE

DIR. DEPARTMENT OF PARK & RECREATION DATE

REVISION	DATE	BRIEF	BY	APPROVED
1	7/12/93	METERED PARKING	DE	7/19/93

R. M. TOWILL CORPORATION
PLANNERS · ENGINEERS · SURVEYORS · PHOTOGRAMMETRISTS
CONSTRUCTION MANAGERS

GEORGE YOKOTA REGISTERED PROFESSIONAL ENGINEER No. 11586 HAWAII, U.S.A.

Par En, Inc.
dba Park Engineering

HAWAII COMMUNITY DEVELOPMENT AUTHORITY
STATE OF HAWAII

KAKA'AKO COMMUNITY DEVELOPMENT DISTRICT

I. D. 3

COOKE STREET

SIGNING AND STRIPING PLAN

ENGINEER: DE CHECKED BY: G.Y.
DRAFTSMAN: KM, G.T. DATE:
APPROVED:
EXECUTIVE DIRECTOR, HAWAII COMMUNITY DEVELOPMENT AUTHORITY

FILE	POCKET	FOLDER	NO.

AS BUILT SHEET G4 OF 117

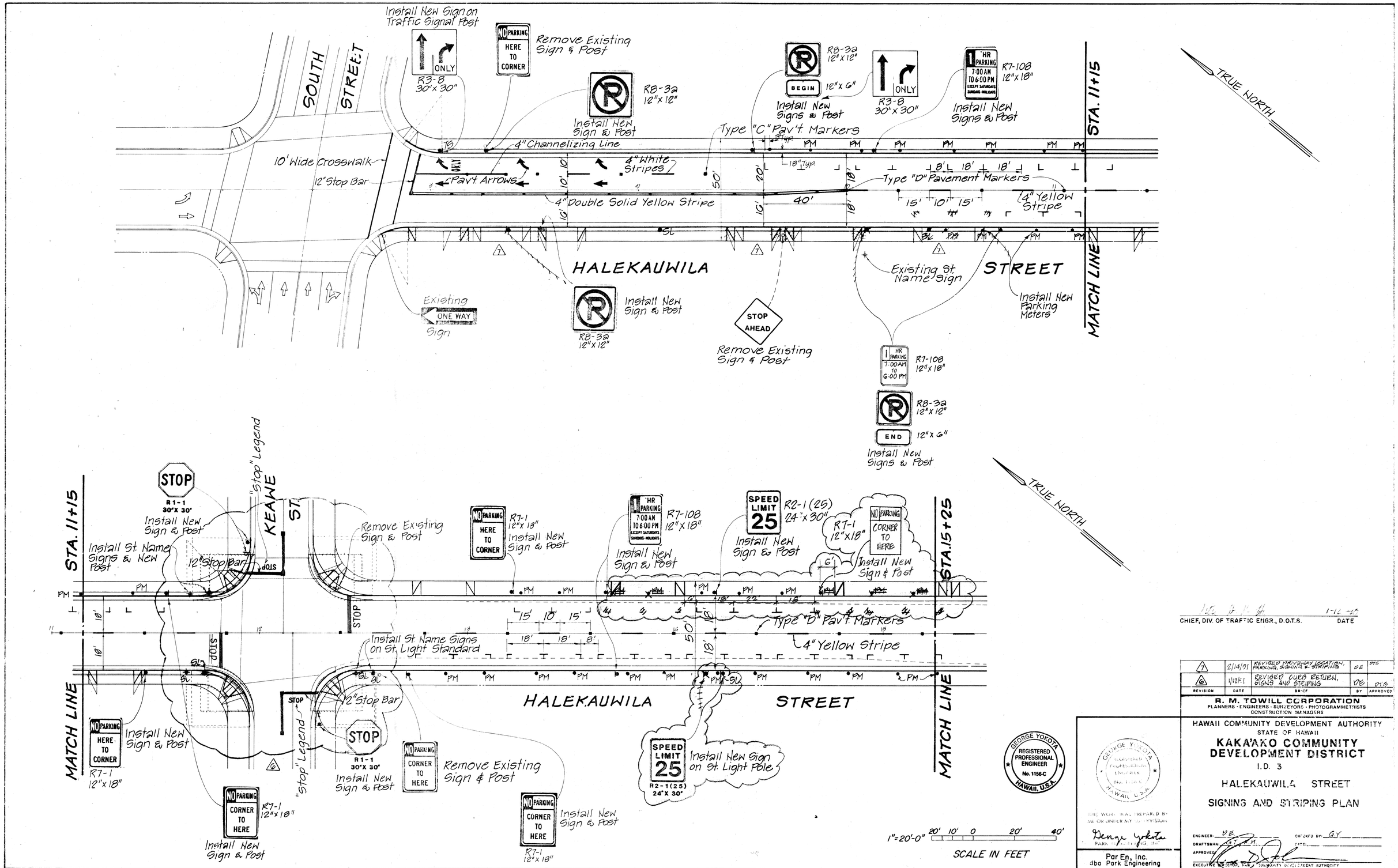

CHIEF, DIV. OF TRAFFIC ENGR., D.O.T.S. DATE 1-12-90

REVISION	DATE	BRIEF	BY	APPROVED
7	2/14/91	REVISED DRIVEWAY LOCATION, PARKING, SIGNING & STRIPING	DE	DTS
6	1/17/91	REVISED CURB RETURN, SIGNS AND STRIPING	DE	DTS

R. M. TOWILL CORPORATION
PLANNERS · ENGINEERS · SURVEYORS · PHOTOGRAMMETRISTS
CONSTRUCTION MANAGERS

HAWAII COMMUNITY DEVELOPMENT AUTHORITY
STATE OF HAWAII

KAKA'AKO COMMUNITY DEVELOPMENT DISTRICT

I.D. 3

HALEKAUWILA STREET

SIGNING AND STRIPING PLAN

GEORGE YOKOTA REGISTERED PROFESSIONAL ENGINEER No. 1156-C HAWAII, U.S.A.

THIS WORK WAS PREPARED BY ME OR UNDER MY SUPERVISION

Par En, Inc.
dba Park Engineering

ENGINEER: DE
DRAFTSMAN: G.T. K.M.
APPROVED:
CHECKED BY: G.Y.
DATE:
EXECUTIVE DIRECTOR, HAWAII COMMUNITY DEVELOPMENT AUTHORITY

AS BUILT 1-28-92

SHEET 65 OF 117

FILE	POCKET	FOLDER	NO.

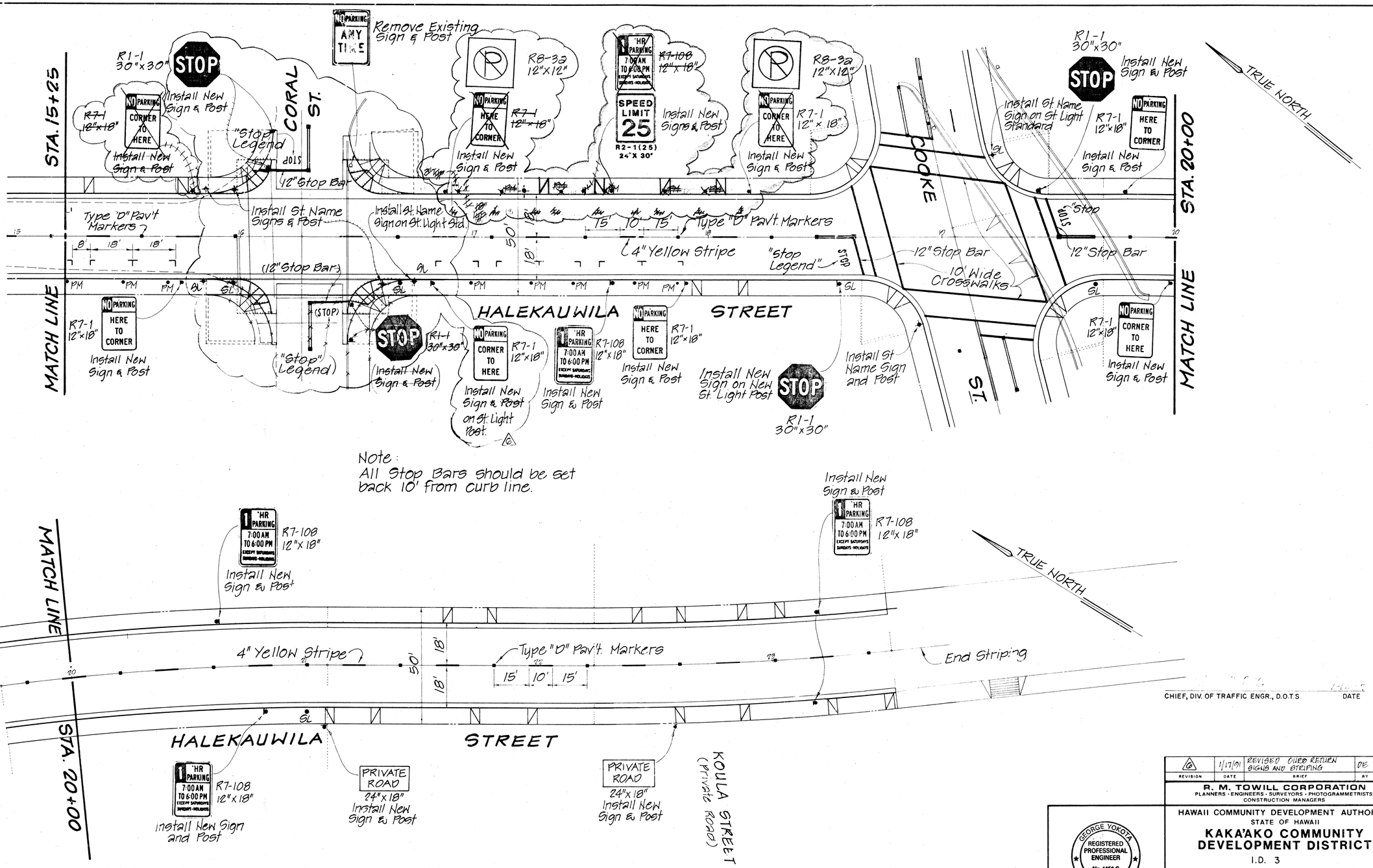

Note:
All Stop Bars should be set back 10' from curb line.

1"=20'-0" 20' 10' 0 20' 40'
SCALE IN FEET

CHIEF, DIV. OF TRAFFIC ENGR., D.O.T.S DATE

REVISION	DATE	BRIEF	BY	APPROVED
6	1/17/01	REVISED OVER RETURN SIGNS AND STRIPING	DE	D.S.G.

R. M. TOWILL CORPORATION
PLANNERS · ENGINEERS · SURVEYORS · PHOTOGRAMMETRISTS
CONSTRUCTION MANAGERS

GEORGE YOKOTA REGISTERED PROFESSIONAL ENGINEER No. 1156-C HAWAII, U.S.A.

Par En. Inc
dba Park Engineering

HAWAII COMMUNITY DEVELOPMENT AUTHORITY
STATE OF HAWAII

KAKA'AKO COMMUNITY DEVELOPMENT DISTRICT

I.D. 3

HALEKAUWILA STREET

SIGNING AND STRIPING PLAN

ENGINEER: DE CHECKED BY: G.Y.
DRAFTSMAN: K.M., G.T. DATE:
APPROVED:
EXECUTIVE DIRECTOR, HAWAII COMMUNITY DEVELOPMENT AUTHORITY

FILE	POCKET	FOLDER	NO.

AS BUILT 1-28-02

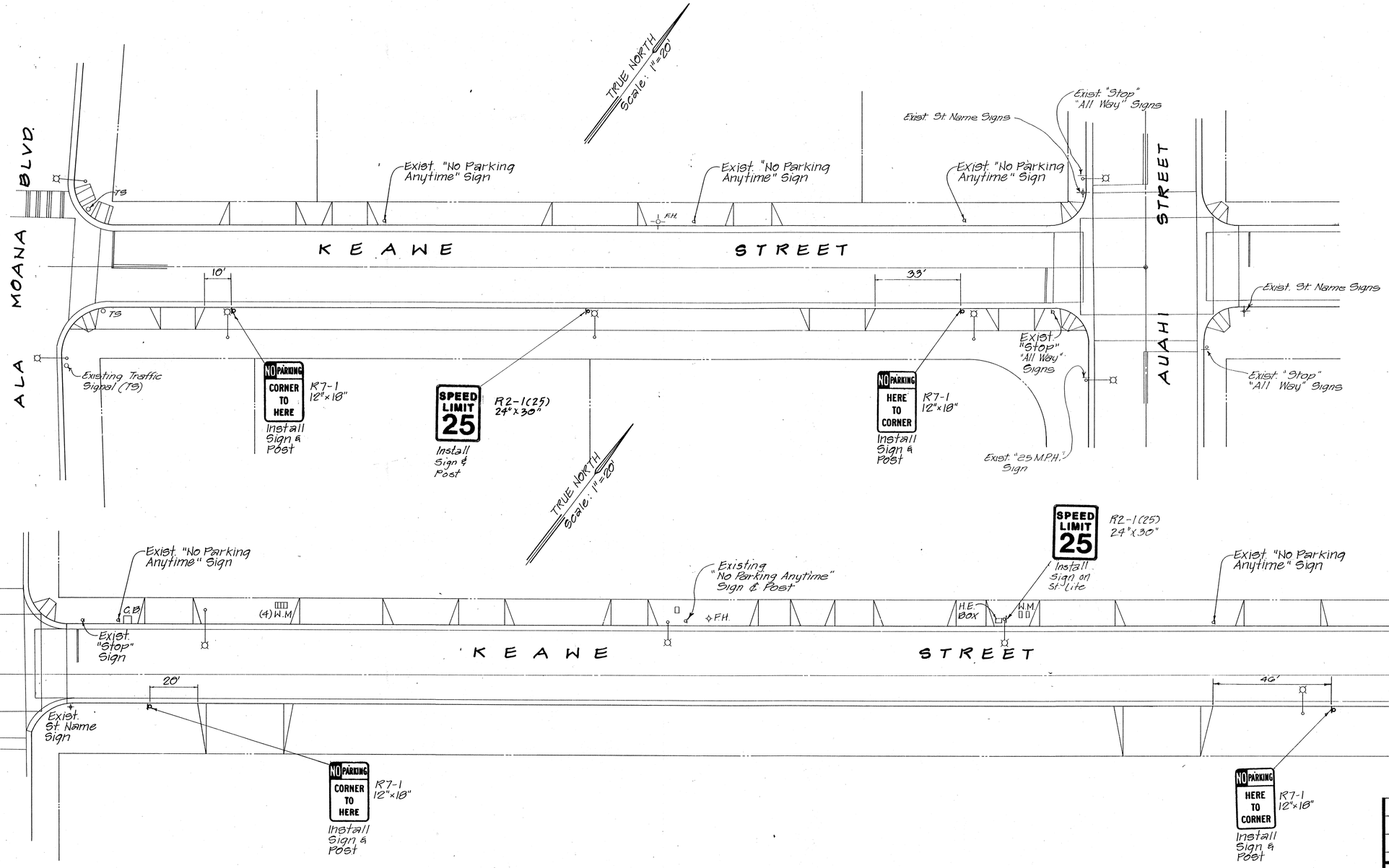

REVISION	DATE	BRIEF	BY	APPROVED

APPROVED:

Peter H. P. Ho 10/5/93

CHIEF, DIV. OF TRAFFIC ENGINEERING, D.O.T.S. DATE

DEXTER S. EU REGISTERED PROFESSIONAL ENGINEER No. 4739-C HAWAII, U.S.A.

THIS WORK WAS PREPARED BY ME OR UNDER MY SUPERVISION

Par En, Inc. dba Park Engineering

1"=20'-0" 20' 10' 0 20' 40'

SCALE IN FEET

HAWAII COMMUNITY DEVELOPMENT AUTHORITY

STATE OF HAWAII

KAKA'AKO COMMUNITY DEVELOPMENT DISTRICT

I. D. 3

KEAWE STREET

SIGNING AND STRIPING PLAN

ENGINEER: DSE CHECKED BY: DSE

DRAFTSMAN: GHT DATE: 1-27-93

EXECUTIVE DIRECTOR, HAWAII COMMUNITY DEVELOPMENT AUTHORITY

AS BUILT SHEET No. GGA OF 119 SHEETS

FILE	POCKET	FOLDER	NO.

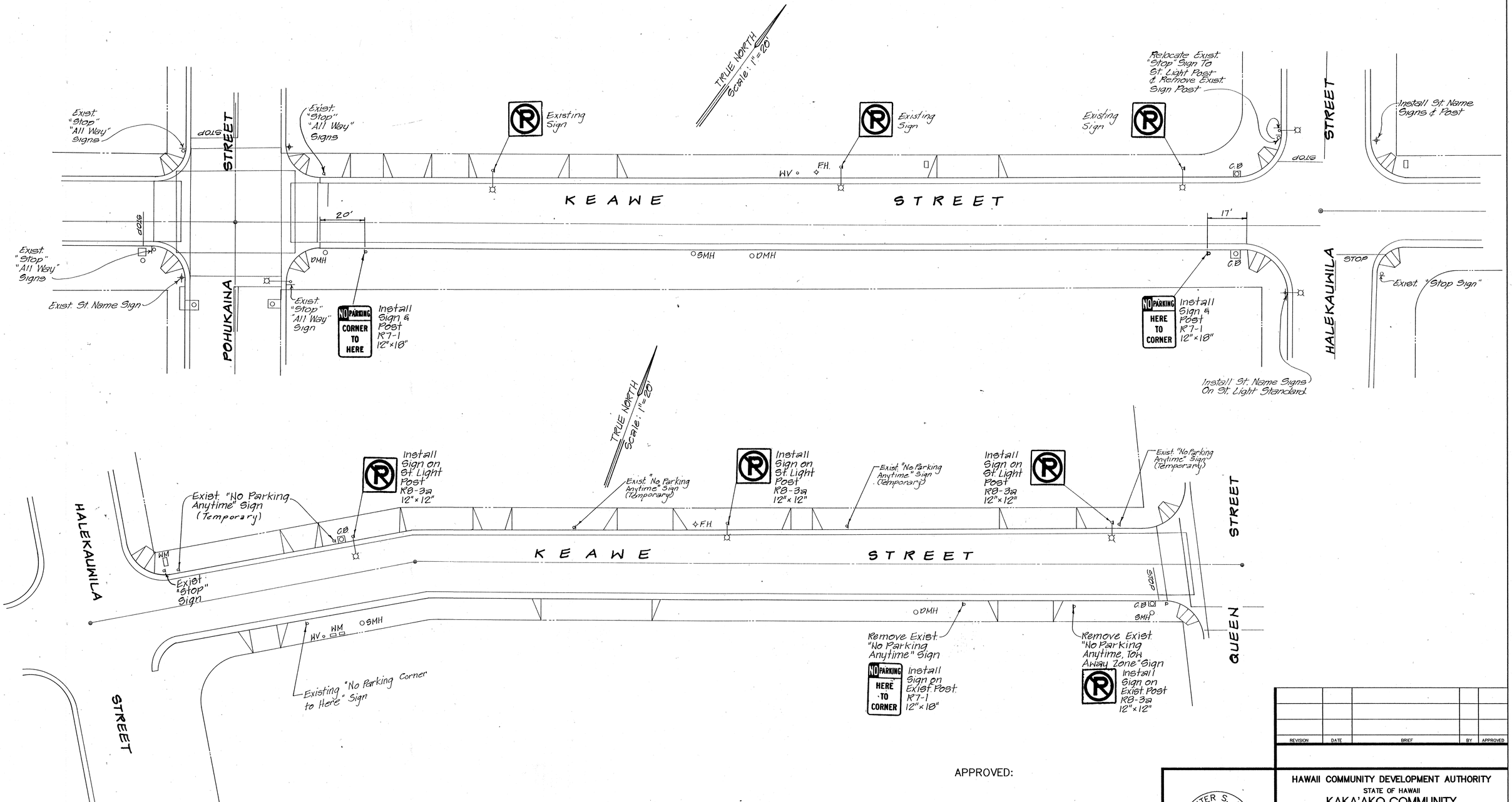

REVISION	DATE	BRIEF	BY	APPROVED

APPROVED:

Peter H. F. Ho 10/5/93
CHIEF, DIV. OF TRAFFIC ENGINEERING, D.O.T.S. DATE

1"=20'-0" 20' 10' 0 20' 40'
SCALE IN FEET

DEXTER S. EU
REGISTERED PROFESSIONAL ENGINEER
No. 4739-C
HAWAII, U.S.A.

THIS WORK WAS PREPARED BY ME OR UNDER MY SUPERVISION

Par En, Inc.
dba Park Engineering

HAWAII COMMUNITY DEVELOPMENT AUTHORITY
STATE OF HAWAII

KAKA'AKO COMMUNITY DEVELOPMENT DISTRICT
I. D. 3

KEAWE STREET
SIGNING AND STRIPING PLAN

ENGINEER: DSE CHECKED BY: DSE
DRAFTSMAN: GHT DATE: 1-27-93

EXECUTIVE DIRECTOR, HAWAII COMMUNITY DEVELOPMENT AUTHORITY

AS BUILT SHEET No. 668 OF 119 SHEETS

FILE	POCKET	FOLDER	NO.

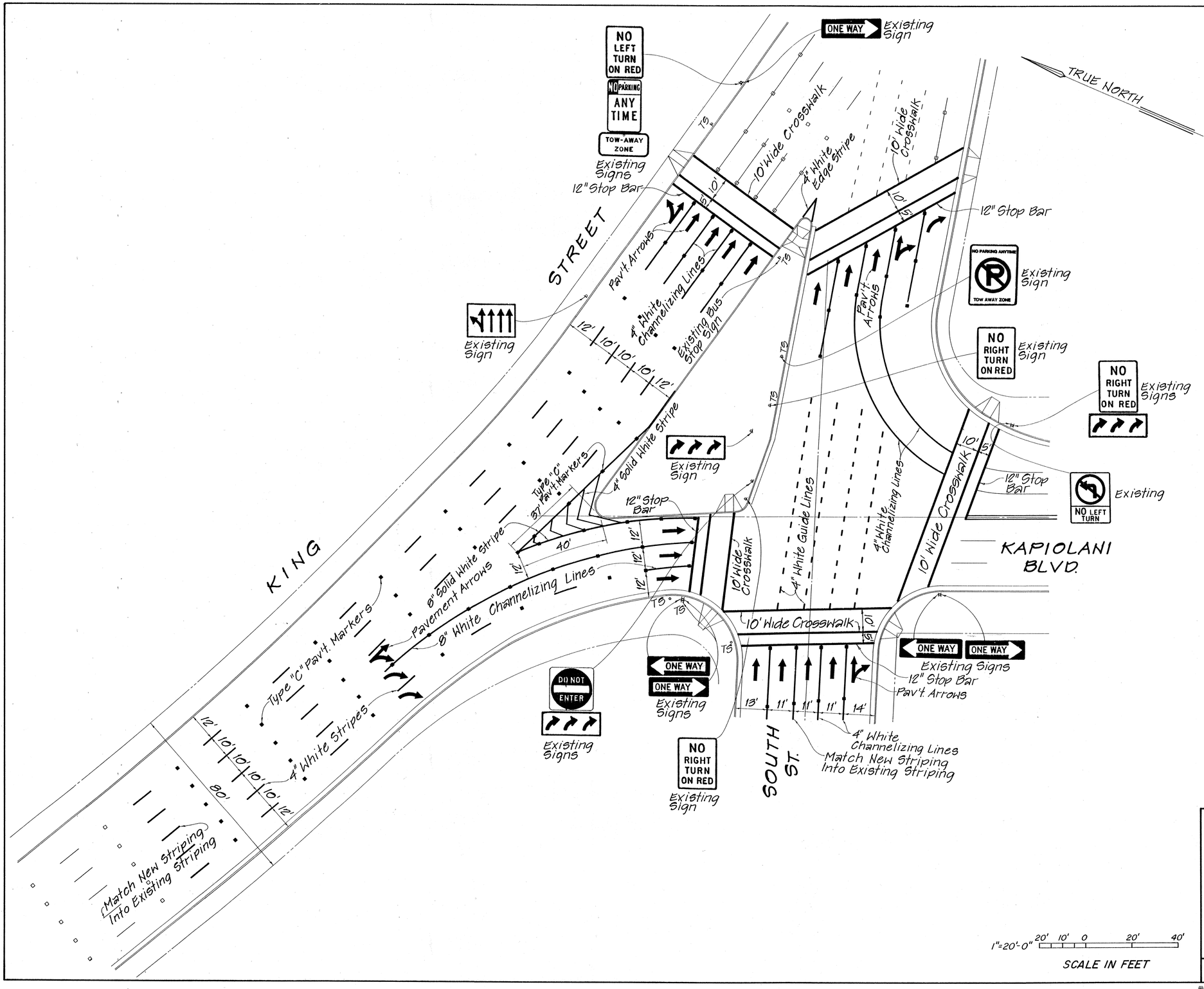

CHIEF, DIV. OF TRAFFIC ENGR., D.O.T.S. DATE

REVISION	DATE	BRIEF	BY	APPROVED

R. M. TOWILL CORPORATION
PLANNERS · ENGINEERS · SURVEYORS · PHOTOGRAMMETRISTS
CONSTRUCTION MANAGERS

GEORGE YAMATA
REGISTERED PROFESSIONAL ENGINEER
No. 1156-C
HAWAII, U.S.A.

Par En, Inc.
dba Park Engineering

HAWAII COMMUNITY DEVELOPMENT AUTHORITY
STATE OF HAWAII

KAKA'AKO COMMUNITY DEVELOPMENT DISTRICT

I.D. 3

KING STREET

SIGNING AND STRIPING PLAN

ENGINEER: DE CHECKED BY: GY
DRAFTSMAN: GY DATE:
APPROVED:
EXECUTIVE DIRECTOR, HAWAII COMMUNITY DEVELOPMENT AUTHORITY

AS BUILT SHEET G9A OF 117

FILE	POCKET	FOLDER	NO.

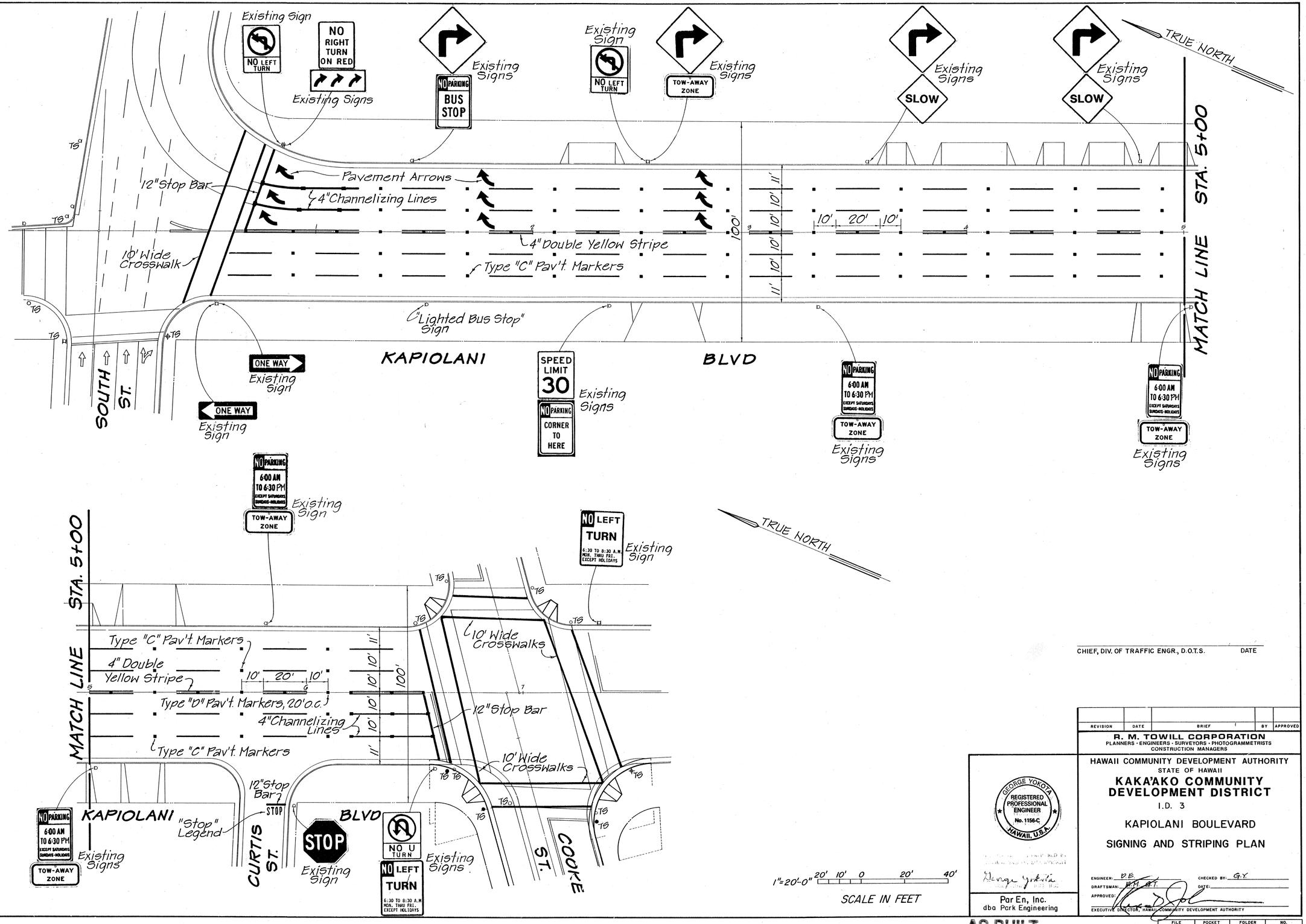

1"=20'-0" 20' 10' 0 20' 40'

SCALE IN FEET

CHIEF, DIV. OF TRAFFIC ENGR., D.O.T.S. DATE

REVISION	DATE	BRIEF	BY	APPROVED

R. M. TOWILL CORPORATION
PLANNERS · ENGINEERS · SURVEYORS · PHOTOGRAMMETRISTS
CONSTRUCTION MANAGERS

GEORGE YOKOTA
REGISTERED PROFESSIONAL ENGINEER
No. 1156-C
HAWAII, U.S.A.

George Yokota

Par En, Inc.
dba Park Engineering

HAWAII COMMUNITY DEVELOPMENT AUTHORITY
STATE OF HAWAII

KAKA'AKO COMMUNITY DEVELOPMENT DISTRICT

I.D. 3

KAPIOLANI BOULEVARD

SIGNING AND STRIPING PLAN

ENGINEER: DE CHECKED BY: G.Y.
DRAFTSMAN: R.M.A.T. DATE:
APPROVED:
EXECUTIVE DIRECTOR, HAWAII COMMUNITY DEVELOPMENT AUTHORITY

FILE	POCKET	FOLDER	NO.

AS BUILT SHEET 60 OF 117

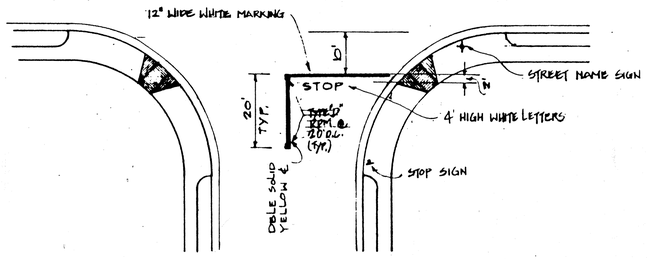

TYPICAL INTERSECTION SIGN AND PAVEMENT MARKINGS

1. INSTALL "STREET NAME" SIGN CENTER OF CURB RETURN OR ON MAIN STREET SIDE OF WHEEL CHAIR RAMP.
2. LOCATION OF STOP SIGN.
   A. INSTALL "STOP" SIGN AT CURB RETURN TANGENT POINT
   B. INSTALL "STOP" SIGN ON METAL STREET LIGHT STANDARD. IF THE LIGHT STANDARD IS LOCATED WITHIN 10' OF CURB RETURN

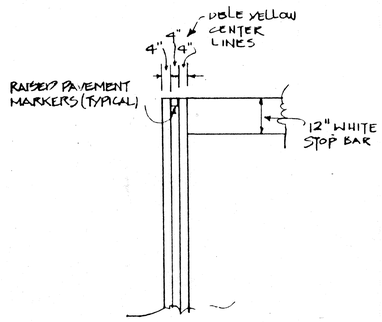

CENTERLINE ℄ STOP BAR DETAIL

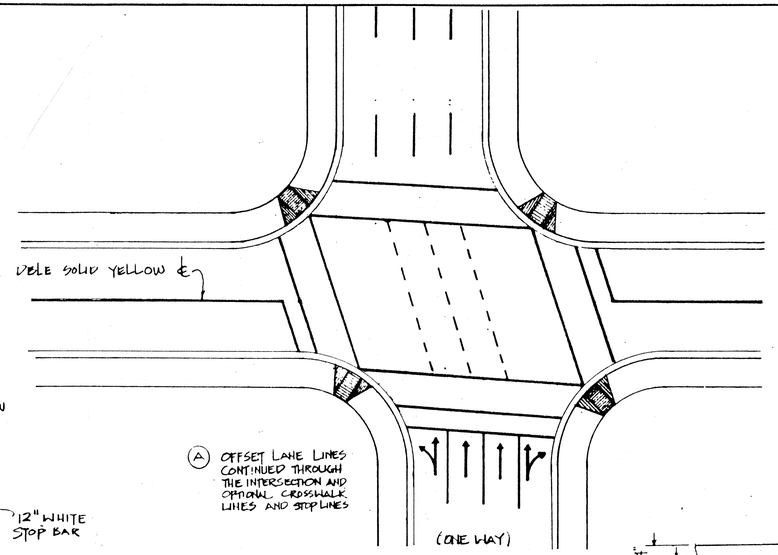

Ⓐ OFFSET LANE LINES CONTINUED THROUGH THE INTERSECTION AND OPTIONAL CROSSWALK LINES AND STOP LINES

URBAN INTERSECTIONS
TYPICAL PAVEMENT MARKINGS

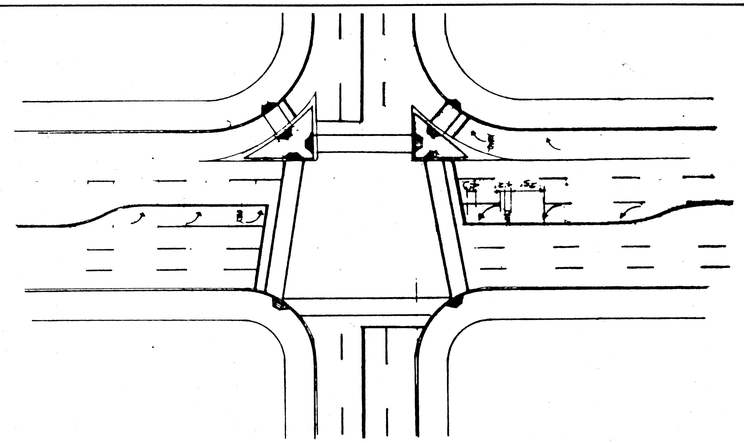

URBAN INTERSECTIONS
TYPICAL PAVEMENT MARKINGS

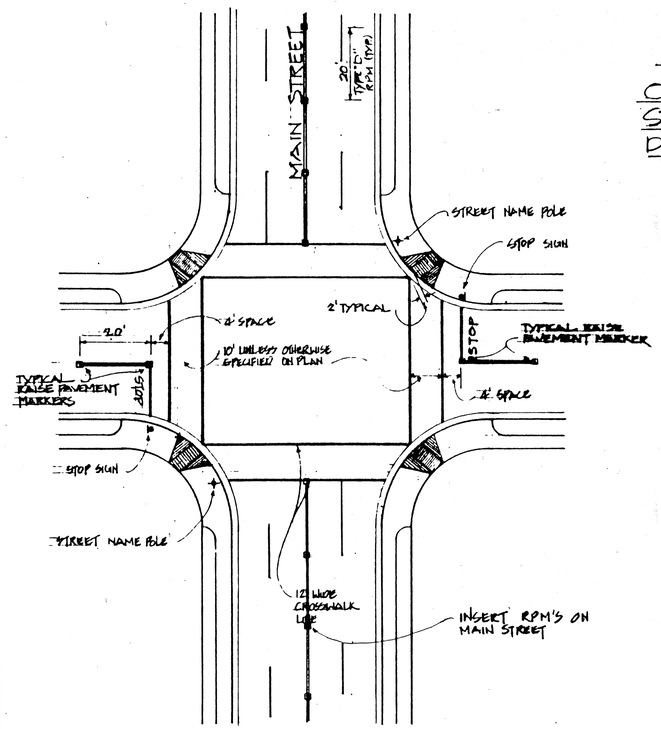

TYPICAL INTERSECTION SIGN AND PAVEMENT MARKINGS WITH CROSSWALKS

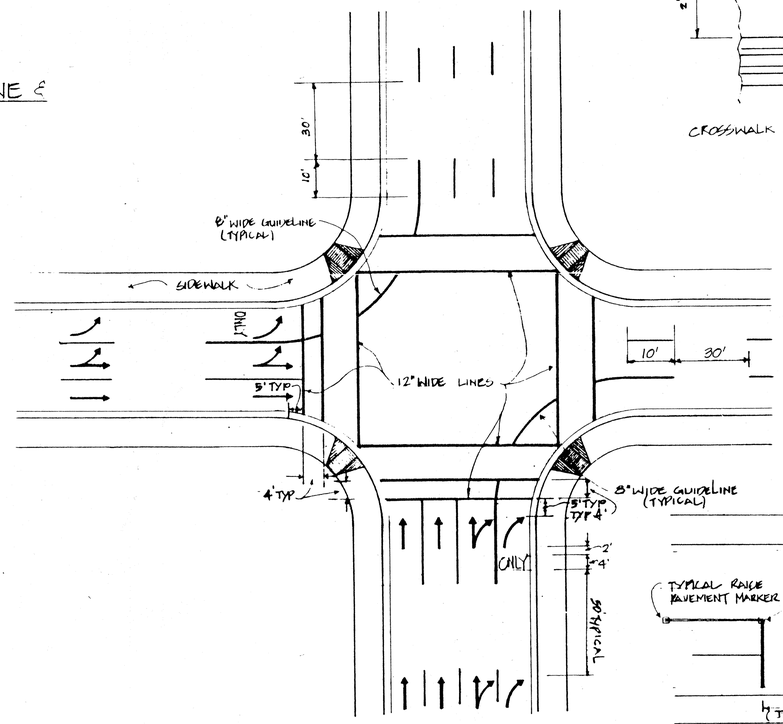

Ⓑ OPTIONAL DOUBLE TURN LANE LINES, PAVEMENT MESSAGES, CROSSWALK LINES AND STOP LINES.

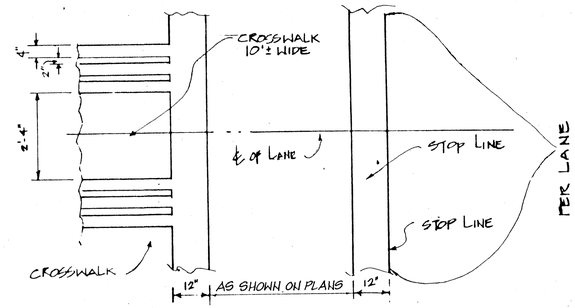

CROSSWALK AND STOP LINE

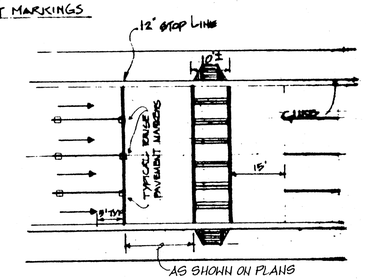

MID-BLOCK CROSSWALK
ONE-WAY TRAFFIC

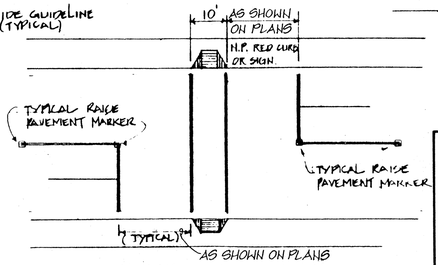

MID-BLOCK CROSSWALK
TWO WAY TRAFFIC

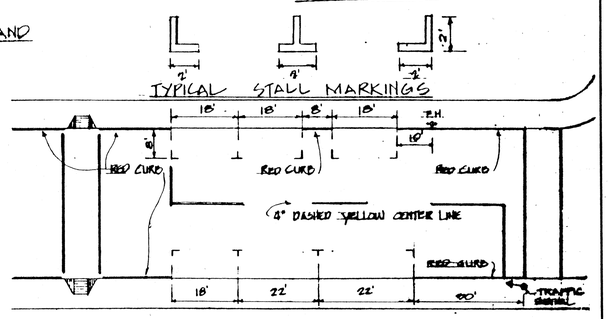

PARKING LIMIT LINES

CHIEF, DIV. OF ENGR., D.O.T.S. DATE

REVISION	DATE	BRIEF	BY	APPROVED

R. M. TOWILL CORPORATION
PLANNERS · ENGINEERS · SURVEYORS · PHOTOGRAMMETRISTS
CONSTRUCTION MANAGERS

GEORGE YOKOTA
REGISTERED PROFESSIONAL ENGINEER
No. 1156-C
HAWAII, U.S.A.

THIS WORK WAS PREPARED BY ME OR UNDER MY SUPERVISION.
PARK ENGINEERING, INC.

Par En, Inc.
dba Park Engineering

HAWAII COMMUNITY DEVELOPMENT AUTHORITY
STATE OF HAWAII

KAKA'AKO COMMUNITY DEVELOPMENT DISTRICT

I.D. 3

DETAILS
SIGNING AND STRIPING

ENGINEER:
DRAFTSMAN:
APPROVED:
CHECKED BY: G.Y.
DATE:
EXECUTIVE DIRECTOR, HAWAII COMMUNITY DEVELOPMENT AUTHORITY

FILE	POCKET	FOLDER	NO.

AS BUILT SHEET 70 OF 117

TYPICAL 2-LANE, TWO-WAY CENTERLINE MARKING

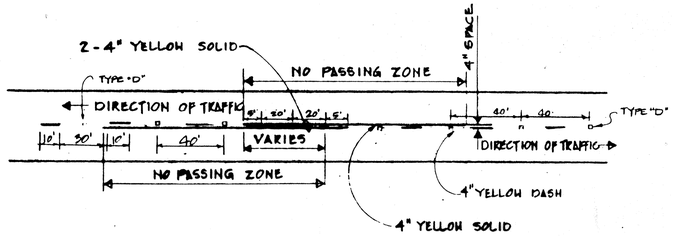

TYPICAL PAVEMENT MARKINGS

MULTI-LANE, TWO-WAY MARKINGS

A. TWO-WAY MARKING

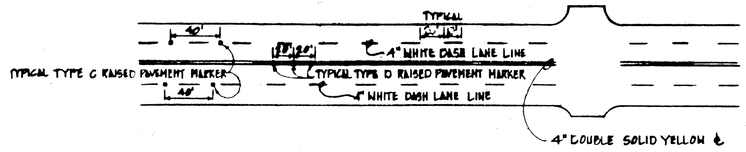

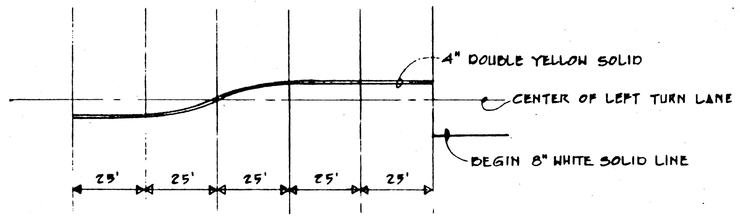

TYPICAL TRANSITION DETAIL

STANDARD PAVEMENT MARKINGS

MULTI-LANE, TWO-WAY MARKINGS

A. SINGLE LANE, TWO-WAY LEFT TURN CHANNELIZATION
(LANE NOT TO BE USED FOR PASSING MANEUVER)

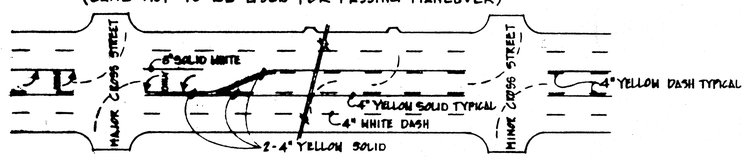

B. TWO-WAY MARKING WITH SINGLE LANE LEFT TURN CHANNELIZATION

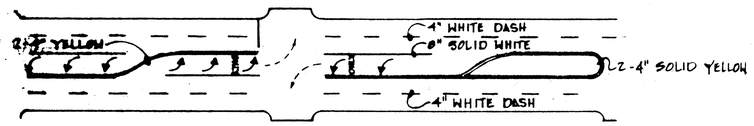

STANDARD PAVEMENT MARKINGS

TWO-WAY MARKINGS

A. REVERSIBLE CENTER LANE USING PORTABLE CONES

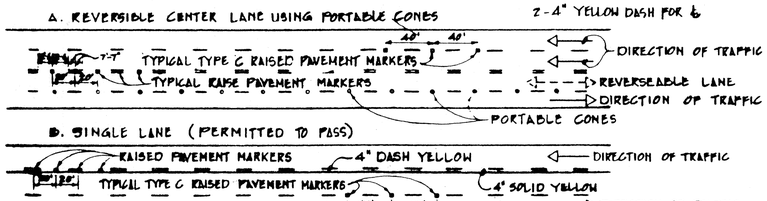

B. SINGLE LANE (PERMITTED TO PASS)

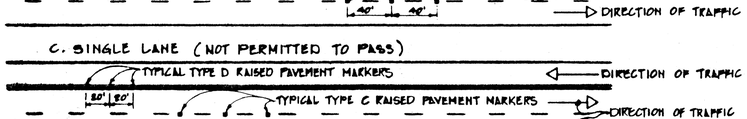

C. SINGLE LANE (NOT PERMITTED TO PASS)

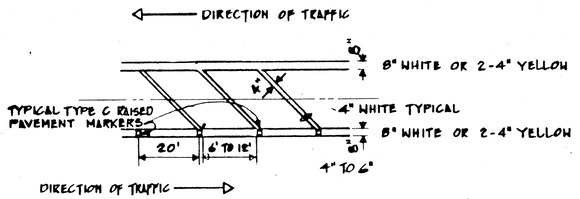

TYPICAL CROSS HATCH

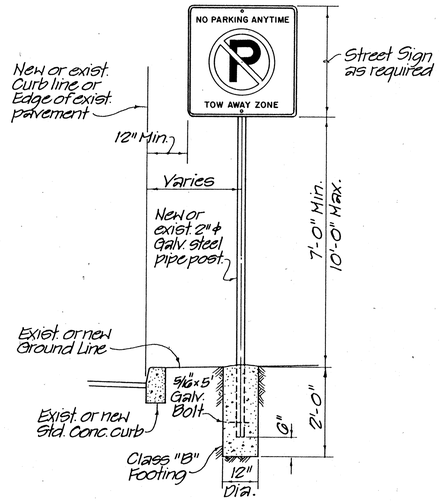

INSTALLATION OF NEW OR RELOCATED SIGN POST

Scale: 1/2"=1'-0"

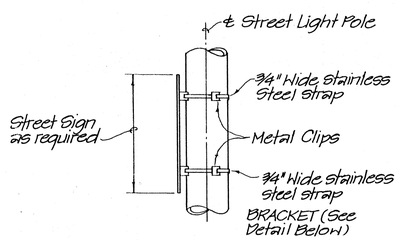

STRAP MOUNTING DETAIL

Not to Scale

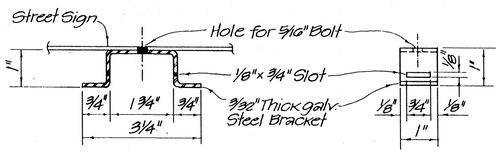

BRACKET DETAIL

Not to Scale

CHIEF, DIV. OF ENGR., D.O.T.S. DATE

1/2"=1'-0" 1' 0 1' 2' 3' 4' 5'

SCALE IN FEET

GEORGE YOKOTA
REGISTERED PROFESSIONAL ENGINEER
No. 1136-C
HAWAII, U.S.A.

THIS WORK WAS PREPARED BY ME OR UNDER MY SUPERVISION.

George Yokota
PARK ENGINEERING, INC.

Par En, Inc.
dba Park Engineering

REVISION	DATE	BRIEF	BY	APPROVED

R. M. TOWILL CORPORATION
PLANNERS · ENGINEERS · SURVEYORS · PHOTOGRAMMETRISTS
CONSTRUCTION MANAGERS

HAWAII COMMUNITY DEVELOPMENT AUTHORITY
STATE OF HAWAII

KAKA'AKO COMMUNITY DEVELOPMENT DISTRICT

I. D. 3

DETAILS

SIGNING AND STRIPING

ENGINEER: CHECKED BY: G.Y.
DRAFTSMAN: DATE:
APPROVED:
EXECUTIVE DIRECTOR, HAWAII COMMUNITY DEVELOPMENT AUTHORITY

FILE	POCKET	FOLDER	NO.

AS BUILT SHEET 71 OF 117

STANDARD NUMERALS AND LETTERS
0'-0" SIZE

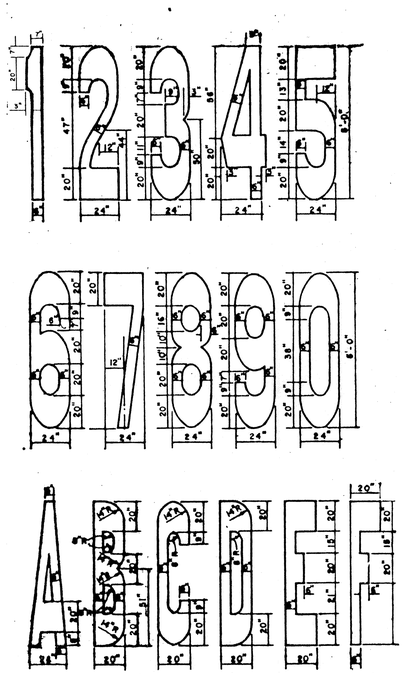

STANDARD DETAILS OF THE WORDS "STOP AND ONLY"
0'-0" SIZE

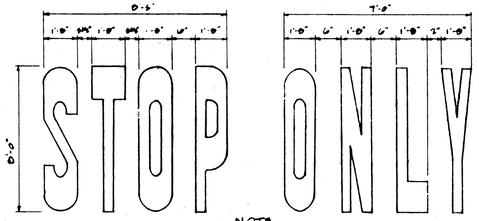

NOTE
WHEN THIS MARKING IS USED IT SHALL BE PAINTED IN EACH LANE OF TRAFFIC APPROACHING THE INTERSECTION

STANDARD DETAILS OF THE WORDS "STOP AND YIELD"
4'-0" SIZE

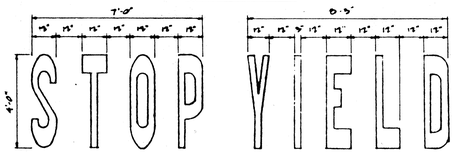

NOTE
WHEN THIS MARKING IS USED IT SHALL BE PAINTED IN EACH LANE OF TRAFFIC APPROACHING THE INTERSECTION

STANDARD PAVEMENT MARKINGS
PAVEMENT ARROWS

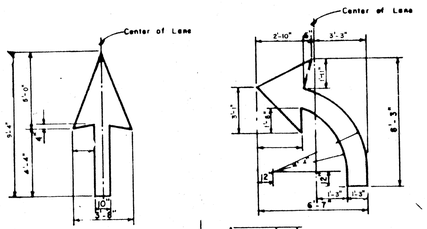

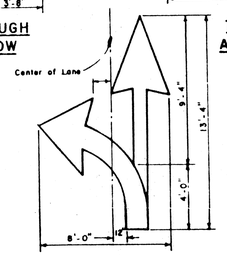

TYPICAL INSTALLATION DETAILS OF RAISED PAVEMENT MARKERS

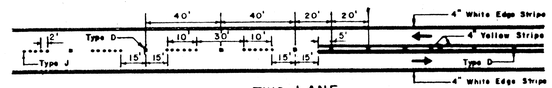

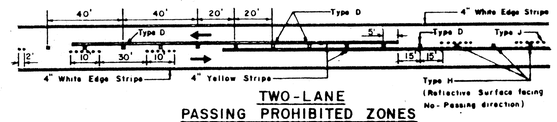

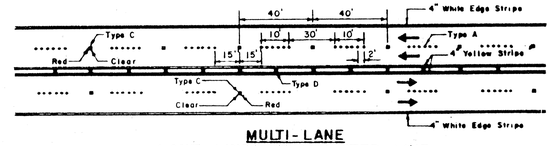

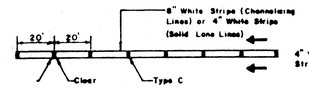

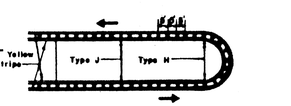

STANDARD NUMERALS AND LETTERS
4'-0" SIZE

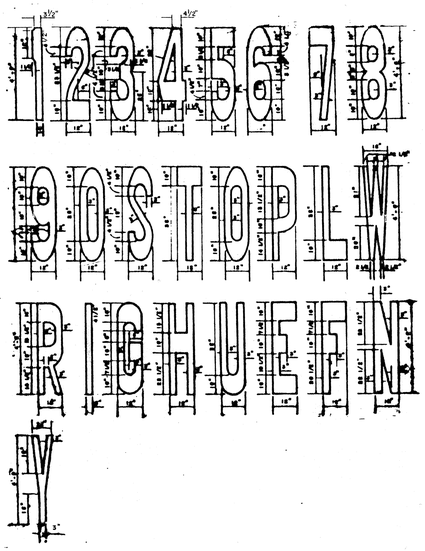

TYPICAL PAVEMENT MARKINGS
TYPES OF LONGITUDINAL LINES
NOT TO SCALE

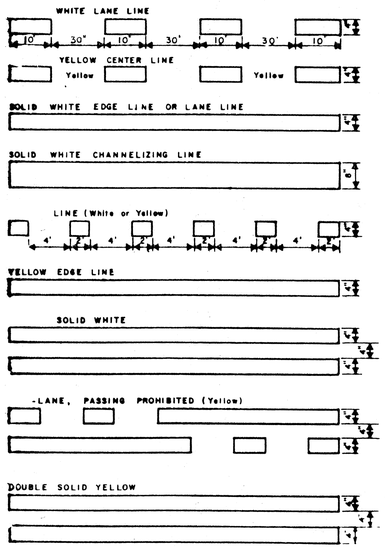

STANDARD RAISE PAVEMENT MARKERS

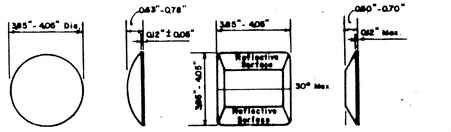

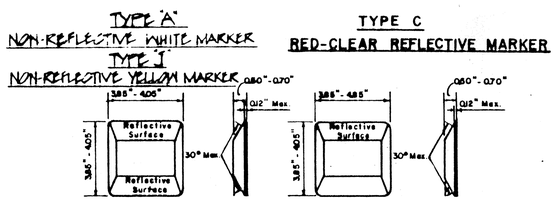

CHIEF, DIV. OF ENG., D.O.T.S. — DATE

REVISION	DATE	BRIEF	BY	APPROVED

R. M. TOWILL CORPORATION
PLANNERS · ENGINEERS · SURVEYORS · PHOTOGRAMMETRISTS
CONSTRUCTION MANAGERS

GEORGE YOKOTA REGISTERED PROFESSIONAL ENGINEER No. 11Sc C HAWAII, U.S.A.

THIS WORK WAS PREPARED BY ME OR UNDER MY SUPERVISION.
George Yokota
PARK ENGINEERING, INC.

Par En, Inc.
dba Park Engineering

HAWAII COMMUNITY DEVELOPMENT AUTHORITY
STATE OF HAWAII

KAKA'AKO COMMUNITY DEVELOPMENT DISTRICT
I.D. 3

DETAILS
SIGNING AND STRIPING

ENGINEER: — CHECKED BY: G.Y.
DRAFTSMAN: — DATE:
APPROVED:
EXECUTIVE DIRECTOR, HAWAII COMMUNITY DEVELOPMENT AUTHORITY

AS BUILT

FILE	POCKET	FOLDER	NO.

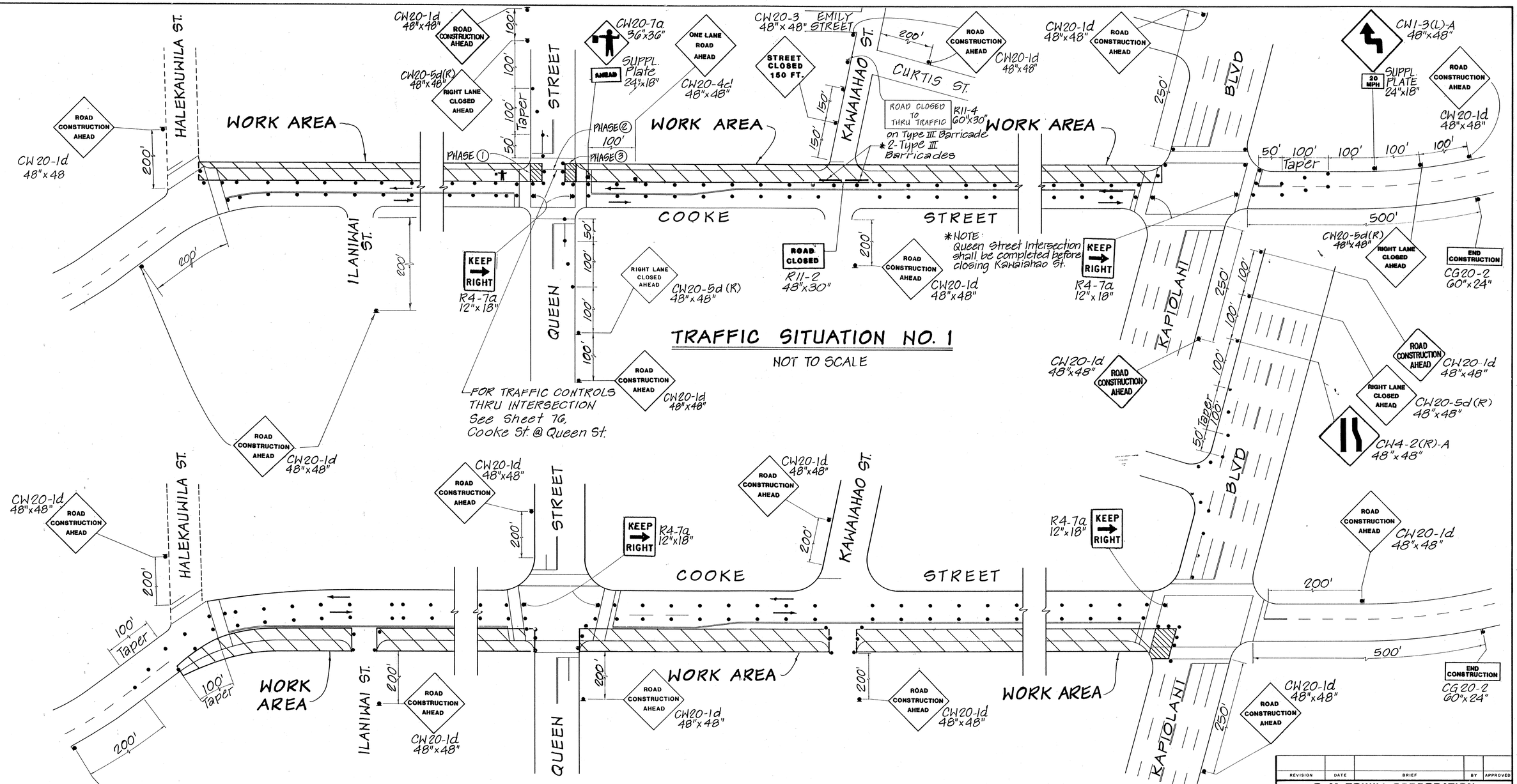

TRAFFIC SITUATION NO. 1

NOT TO SCALE

TRAFFIC SITUATION NO. 1A

NOT TO SCALE

CHIEF, DIV OF TRAFFIC ENGR., D.O.T.S. DATE

1"= 40'-0" 40' 20' 0 40' 80'

SCALE IN FEET

REVISION	DATE	BRIEF	BY	APPROVED

R. M. TOWILL CORPORATION
PLANNERS · ENGINEERS · SURVEYORS · PHOTOGRAMMETRISTS
CONSTRUCTION MANAGERS

GEORGE YOKOTA
REGISTERED PROFESSIONAL ENGINEER
No. 1156-C
HAWAII, U.S.A.

Par En, Inc.
dba Park Engineering

HAWAII COMMUNITY DEVELOPMENT AUTHORITY
STATE OF HAWAII

KAKA'AKO COMMUNITY DEVELOPMENT DISTRICT

I.D. 3

TRAFFIC CONTROL PLAN

ENGINEER: DE CHECKED BY: GY
DRAFTSMAN: KM, GT DATE:
APPROVED:
EXECUTIVE DIRECTOR, HAWAII COMMUNITY DEVELOPMENT AUTHORITY

AS BUILT

FILE	POCKET	FOLDER	NO.

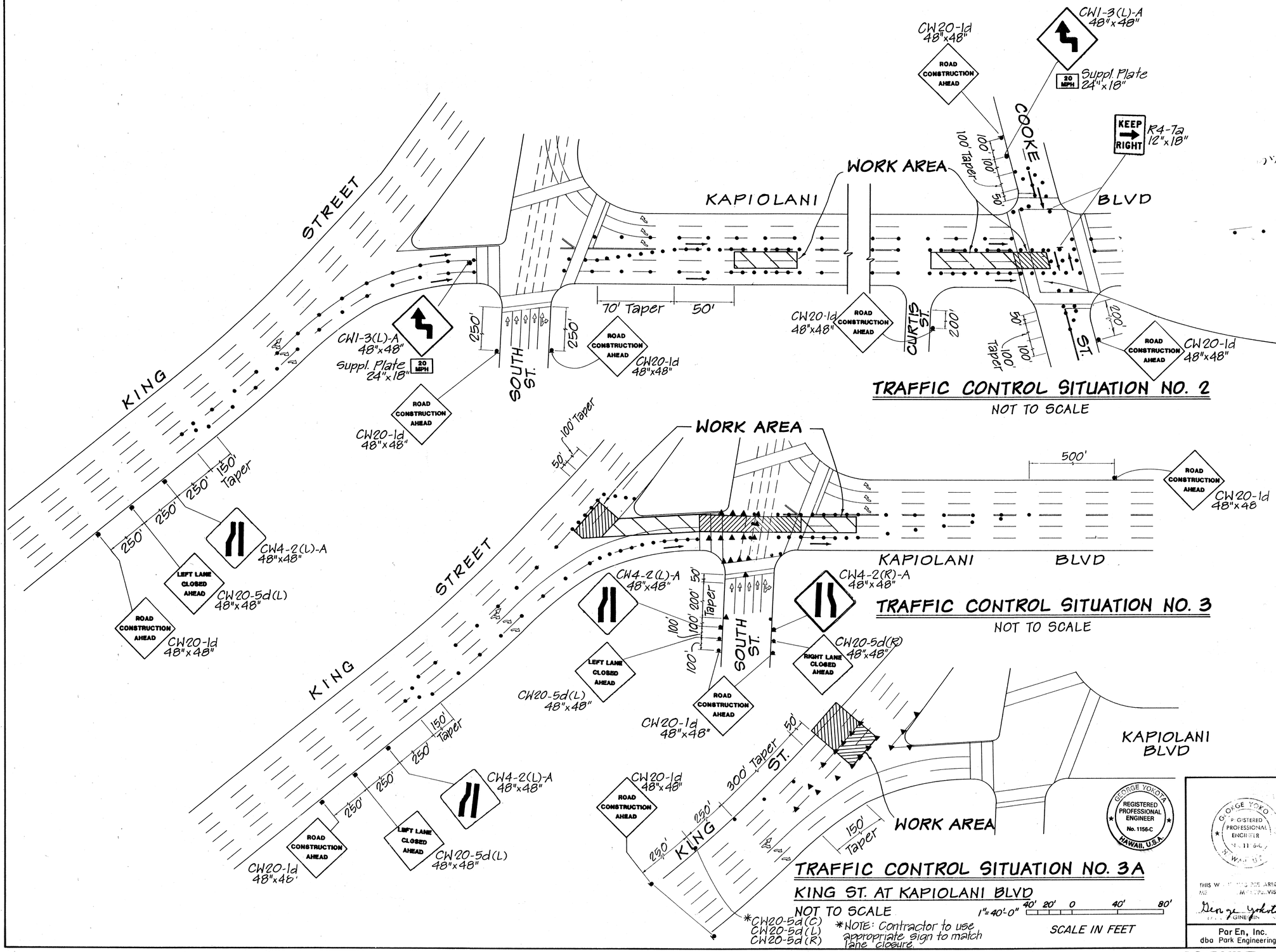

TRAFFIC CONTROL SITUATION NO. 2

NOT TO SCALE

FOR TRAFFIC CONTROLS THRU INTERSECTION
See Sheet 80
Kapiolani Blvd at Cooke St.

TRAFFIC CONTROL SITUATION NO. 3

NOT TO SCALE

CHIEF, DIV. OF TRAFFIC ENGR., D.O.T.S _____ DATE

TRAFFIC CONTROL SITUATION NO. 3A

KING ST. AT KAPIOLANI BLVD

NOT TO SCALE

1"=40'-0" 40' 20' 0 40' 80'

SCALE IN FEET

REVISION	DATE	BRIEF	BY	APPROVED

R. M. TOWILL CORPORATION
PLANNERS · ENGINEERS · SURVEYORS · PHOTOGRAMMETRISTS
CONSTRUCTION MANAGERS

GEORGE YOKOTA REGISTERED PROFESSIONAL ENGINEER No. 1156-C HAWAII, U.S.A.

GEORGE YOKO REGISTERED PROFESSIONAL ENGINEER STATE OF HAWAII

THIS WORK WAS PREPARED BY ME OR UNDER MY SUPERVIS

George Yokota
REGISTERED PROFESSIONAL ENGINEER

Par En, Inc.
dba Park Engineering

HAWAII COMMUNITY DEVELOPMENT AUTHORITY
STATE OF HAWAII

KAKA'AKO COMMUNITY DEVELOPMENT DISTRICT

I. D. 3

TRAFFIC CONTROL PLAN

ENGINEER: DE CHECKED BY: G.Y.
DRAFTSMAN: K.M.G.T. DATE:
APPROVED: _____

EXECUTIVE DIRECTOR, HAWAII COMMUNITY DEVELOPMENT AUTHORITY

FILE	POCKET	FOLDER	NO.

AS BUILT SHEET 74 OF 117

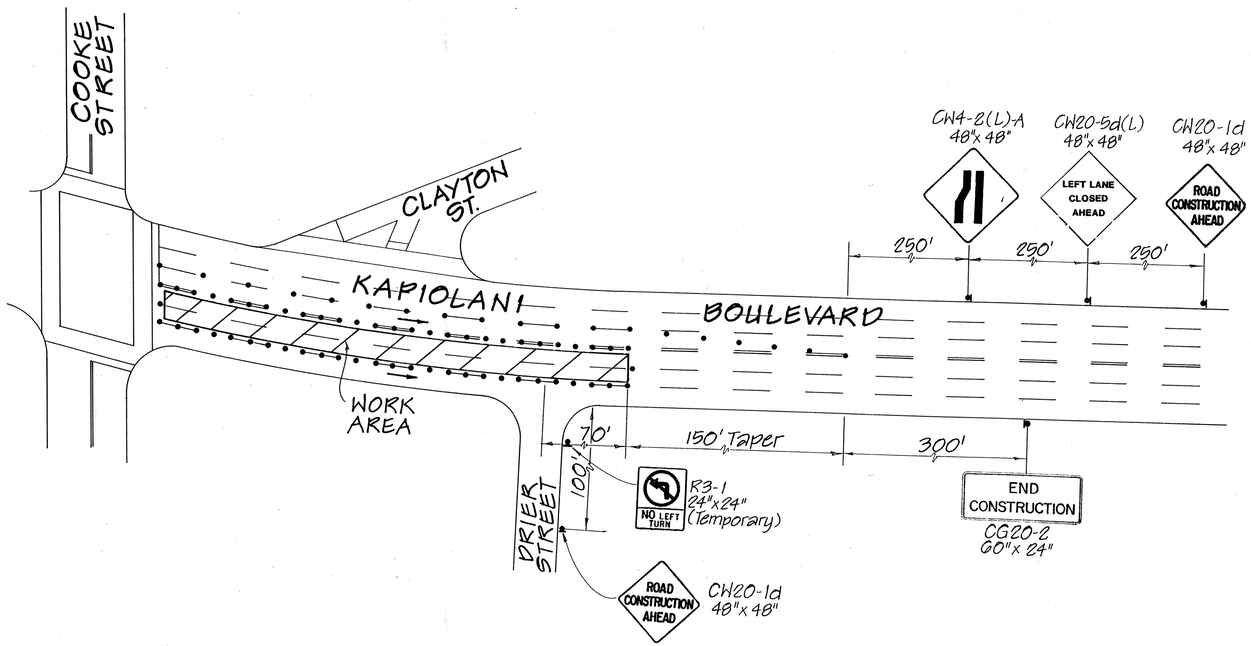

CHIEF, DIV. OF TRAFFIC ENGR., D.O.T.S. _____ DATE

REVISION	DATE	BRIEF	BY	APPROVED

R. M. TOWILL CORPORATION
PLANNERS · ENGINEERS · SURVEYORS · PHOTOGRAMMETRISTS
CONSTRUCTION MANAGERS

GEORGE YOKOTA
REGISTERED PROFESSIONAL ENGINEER
No. 1156-C
HAWAII, U.S.A.

Par En, Inc.
dba Park Engineering

HAWAII COMMUNITY DEVELOPMENT AUTHORITY
STATE OF HAWAII

KAKA'AKO COMMUNITY DEVELOPMENT DISTRICT

I. D. 3

TRAFFIC CONTROL PLAN

ENGINEER: DE
DRAFTSMAN: AM
APPROVED: _____
EXECUTIVE DIRECTOR, HAWAII COMMUNITY DEVELOPMENT AUTHORITY

CHECKED BY: G.Y.
DATE: _____

FILE	POCKET	FOLDER	NO.

AS BUILT SHEET 74A OF 117

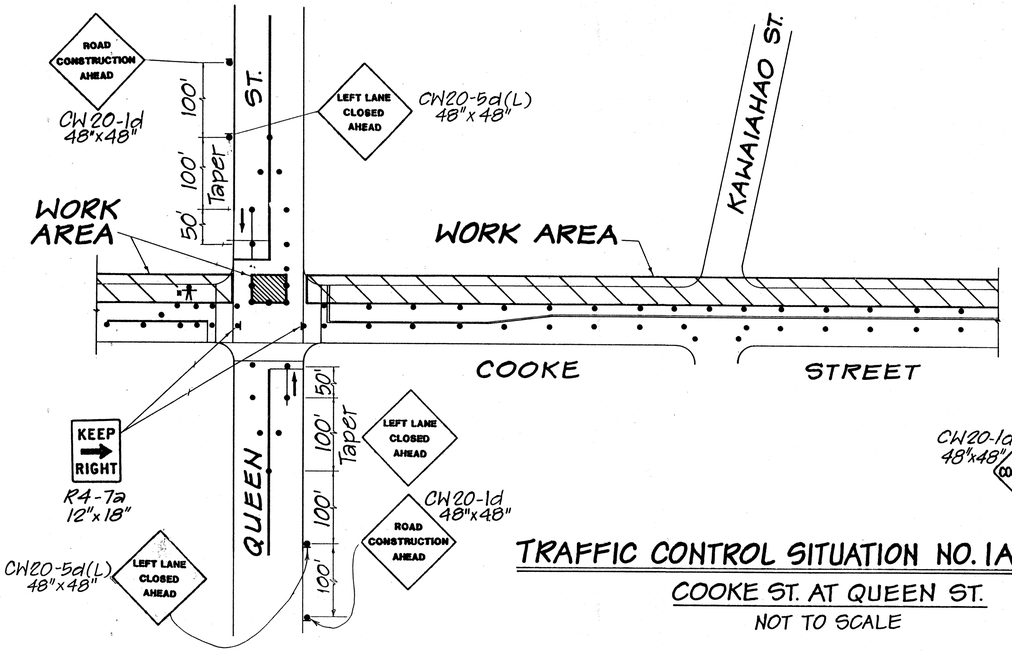

TRAFFIC CONTROL SITUATION NO. 1A

COOKE ST. AT QUEEN ST.

NOT TO SCALE

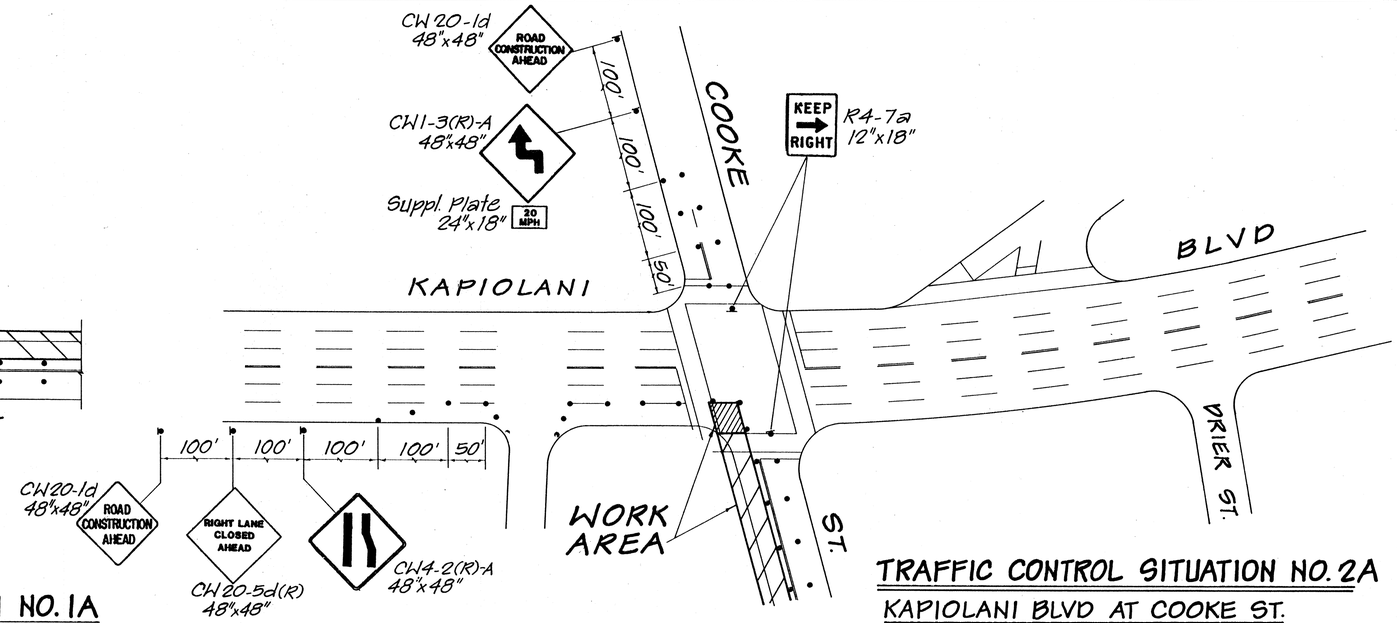

TRAFFIC CONTROL SITUATION NO. 2A

KAPIOLANI BLVD AT COOKE ST.

NOT TO SCALE

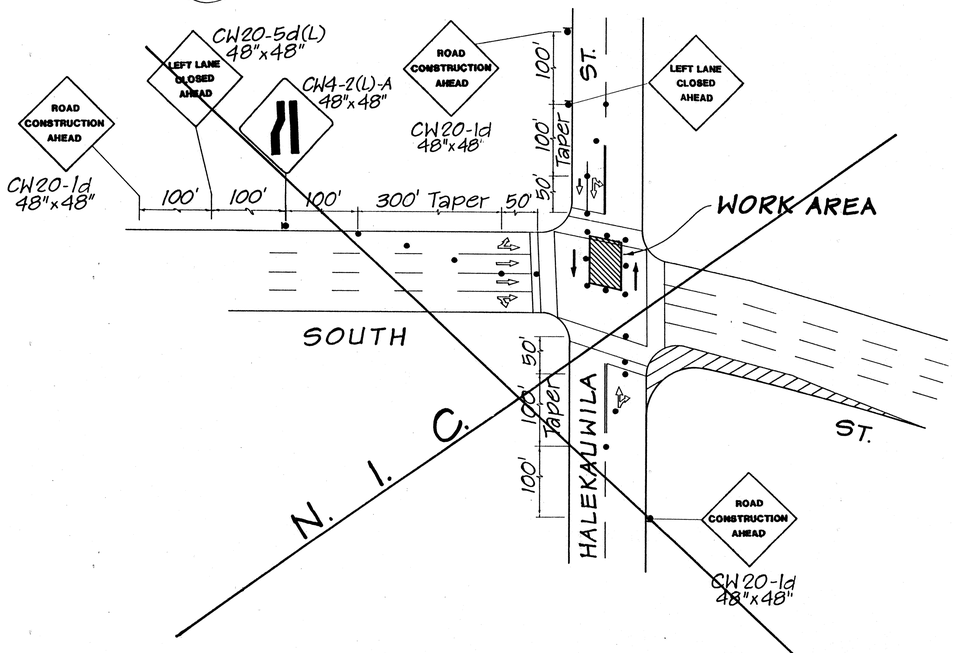

TRAFFIC CONTROL SITUATION NO. 4A

SOUTH ST. AT HALEKAUWILA ST.

NOT TO SCALE

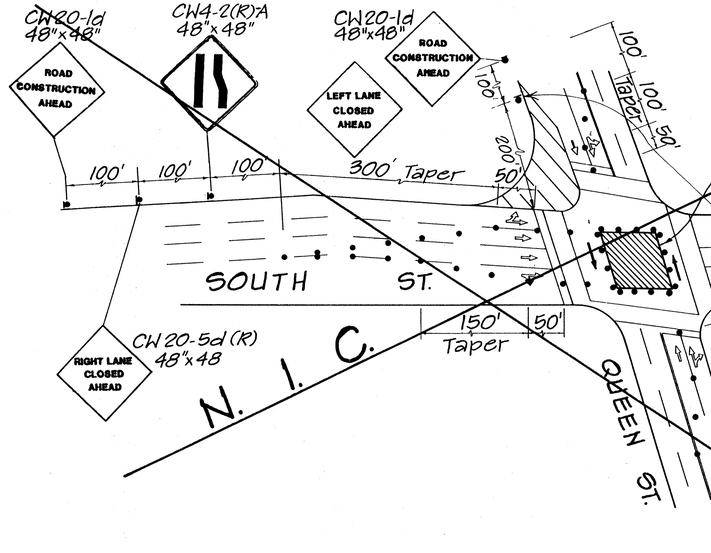

TRAFFIC CONTROL SITUATION NO. 4A

SOUTH ST. AT QUEEN ST.

NOT TO SCALE

1"=40'-0" 40' 20' 0 40' 80'

SCALE IN FEET

CHIEF, DIV. OF TRAFFIC ENGR., D.O.T.S. DATE

REVISION	DATE	BRIEF	BY	APPROVED

R. M. TOWILL CORPORATION
PLANNERS · ENGINEERS · SURVEYORS · PHOTOGRAMMETRISTS
CONSTRUCTION MANAGERS

GEORGE YOKOTA REGISTERED PROFESSIONAL ENGINEER No. 1156-C HAWAII, U.S.A.

Par En, Inc.
dba Park Engineering

HAWAII COMMUNITY DEVELOPMENT AUTHORITY
STATE OF HAWAII

KAKA'AKO COMMUNITY DEVELOPMENT DISTRICT

I. D. 3

TRAFFIC CONTROL PLAN

ENGINEER: D.E. CHECKED BY: G.Y.
DRAFTSMAN: K.M., G.T. DATE:
APPROVED:
EXECUTIVE DIRECTOR, HAWAII COMMUNITY DEVELOPMENT AUTHORITY

AS BUILT

FILE	POCKET	FOLDER	NO.

TRUE NORTH

NO PARKING 6:30 AM TO 8:30 AM EXCEPT SATURDAYS SUNDAYS HOLIDAYS
TOW-AWAY ZONE
2 HOUR PARKING MON. THRU SAT. 7 AM TO 6 PM EXCEPT TOW-AWAY HRS

TOW AWAY ZONE

2-LANES

AM 3HO
ONE WAY

BIKES

Exist. Pedestrian Crossing (white)

Exist. Lane Marking (white) w/ reflector

Exist. parking stall markings (white)

Paint 8' of Curb Red.

Exist. centerline stripe (Double, yellow)

VICTORIA ST.

Remove portion of exist. marking (dotted line)

CONSTRUCTION AREA

Exist. Pedestrian Crossing (white)

ONE WAY

ONE WAY

LEFT TURN WITH CAUTION ON GREEN

KING ST.

Replace pavement markings obliterated by construction. see Notes on Sheet 6

NEW FHY SEE SHT. NO. 808

2 HOUR PARKING 7AM-6 PM EXCEPT SATURDAYS SUNDAYS HOLIDAYS

BIKE ROUTE

BIKE ROUTE

YOUNG ST.

STOP

LOADING ZONE
COMMERCIAL VEHICLES WITH PERMIT ONLY
MON. THRU SAT. 7 AM TO 4 PM
HOL'DAYS & WEEKENDS

Remove Exist. Parking Meter & Parking Stall Striping See Sheet No 808

VICTORIA ST.
EXISTING TRAFFIC SIGN AND STRIPING PLAN

Scale: 1" = 20'

APPROVED:

Chief, Department of Transportation Services — Date

1" = 20' 20' 0 20' 40'

Graphic Scale

REVISION	DATE	BRIEF	BY	APPROVED

R. M. TOWILL CORPORATION
PLANNERS · ENGINEERS · SURVEYORS · PHOTOGRAMMETRISTS
CONSTRUCTION MANAGERS

HAWAII COMMUNITY DEVELOPMENT AUTHORITY
STATE OF HAWAII

KAKA'AKO COMMUNITY DEVELOPMENT DISTRICT
IMPROVEMENT DISTRICT #3

VICTORIA STREET
EXISTING TRAFFIC SIGN & STRIPING PLAN

ANDREW S. H. YOUNG REGISTERED PROFESSIONAL ENGINEER No. 3909-C HAWAII, U.S.A.

THIS WORK WAS PREPARED BY ME OR UNDER MY SUPERVISION
Andrew Young
Signature 10-31-97

ATA AUSTIN, TSUTSUMI, & ASSOC., INC.
ENGINEERS · SURVEYORS · HAWAII · GUAM

ENGINEER: RS — CHECKED BY: ASHY
DRAFTSMAN: JP — DATE:
APPROVED:
EXECUTIVE DIRECTOR, HAWAII COMMUNITY DEVELOPMENT AUTHORITY

FILE	POCKET	FOLDER	NO.

AS BUILT SHEET 80C OF 117

ASK-ENGINEERING (808) 521-2322 CALL DAYMARE