RECEIVED
2015 SEP 30 PM 12 58
HAWAII COMMUNITY
DEVELOPMENT
AUTHORITY

CADES SCHUTTE
A Limited Liability Law Partnership

CALVERT G. CHIPCHASE 7757-0
CHRISTOPHER T. GOODIN 8562-0
1000 Bishop Street, Suite 1200
Honolulu, Hawai'i 96813-4212
Telephone: (808) 521-9220
Facsimile: (808) 540-5021
Email: cchipchase@cades.com
cgoodin@cades.com

Attorneys for Petitioner
DOWNTOWN CAPITAL LLC

Docket No.:
CCED KAK 2015-3

BEFORE THE HAWAII COMMUNITY DEVELOPMENT AUTHORITY

STATE OF HAWAI'I

In re Downtown Capital LLC's Petition for Waiver or Suspension of the Visible Light Transmittance Standard in HAR § 15-217-55(k)(2) for the Project under Development Permit No. KAK 12-109 for 801 South Street (State Tax Map Key No. (1) 2-1-047-003) Issued by Hawaii Community Development Authority on December 5, 2012	DEVELOPMENT PERMIT NO. KAK 12-109 **DOWNTOWN CAPITAL LLC'S WITNESS AND EXHIBIT LISTS** **EXHIBITS 1-25** **CERTIFICATE OF SERVICE**

DOWNTOWN CAPITAL LLC'S WITNESS AND EXHIBIT LISTS

Pursuant to the schedule established at the prehearing conference on September 21, 2015, Downtown Capital LLC ("**Downtown Capital**") submits the following witness and exhibit lists.

List of Live Witness

Ryan Harada
215 North King Street, Suite 1000
Honolulu, Hawai'i 96817

Downtown Capital reserves the right to call representatives of Hawaii Community Development Authority ("**HCDA**") and rebuttal witnesses.

Exhibit List and Witness Declarations

1. Transcript of proceedings on July 22, 2015, in the proceedings for *In re Petition of OliverMcMillan Pacific Rim, LLC*, Docket No. CCED KAK 2015-2 ("***OMPR***").

2. Building permit for the residential workforce housing project at 801 South Street, Building A (the "**Project**"). Only the cover pages of the permit and plans have been included in hard copy. Because of the large number of pages and the size of the plan sheets, the remaining documents attached to the permit have been included on a disk.

3. Letter dated March 19, 2015, from David Miller to Dan Nishikawa, with enclosure. The letter was attached as Exhibit 1 to the Petition for Waiver and Suspension of § 15-217-55(k)(2) of the Mauka Area Rules, filed May 28, 2015, in the *OMPR* case.

4. Letter dated March 23, 2015, from Downtown Capital to Anthony Ching with enclosures.

5. Temporary Certificate of Occupancy dated April 10, 2015 for the Project.

6. Glazing and Energy Analysis Report Relating to Visual Light Transmittance (VLT) and Leadership in Energy and Environmental Design (LEED) Requirements of the Mauka Area Rules prepared by Douglas Engineering Pacific, Inc., dated July 20, 2015, and submitted in the *OMPR* case.

7. Staff Report dated July 22, 2015 and submitted in the *OMPR* case.

8. Affidavit of Jon Weir dated July 16, 2015. The affidavit was attached as Exhibit A to Petitioner OliverMcMillan Pacific Rim, LLC's Final Exhibit List filed July 21, 2015 in the *OMPR* case.

9. Letter dated April 2, 2015 from Calvert G. Chipchase to Anthony Ching.

10. Excerpt of Downtown Capital's Petition Appealing the August 19, 2015 Notice of Violation, filed with HCDA September 18, 2015 (the "**Appeal Petition**").

11. Declaration of Ryan Harada dated September 18, 2015. The declaration was attached to the Appeal Petition.

12. Declaration of Vito Galati dated September 18, 2015. The declaration was attached to the Appeal Petition.

13. Declaration of Marshall Hung dated September 18, 2015. The declaration was attached to the Appeal Petition.

14. Declaration of Colbert Matsumoto dated September 18, 2015. The declaration was attached to the Appeal Petition.

15. Memorandum from Downtown Capital to HCDA regarding waiver of the Visual Light Transmittance ("**VLT**") standard.

16. Transcript of proceedings on September 2, 2015 in the *OMPR* case.

17. August 2015 HCDA Newsletter.

18. Affidavit of Jon Weir dated August 20, 2015. The affidavit was attached as Exhibit K to Petitioner OliverMcMillan Pacific Rim, LLC's Supplemental Exhibit List filed August 25, 2015 and substituted in the *OMPR* case.

19. Letter dated March 12, 2015 from Neal I. Payton of Torti Gallas and Partners to Dan Nishikawa. The letter was attached as Exhibit 7 to the Petition for Waiver and Suspension of § 15-217-55(k)(2) of the Mauka Area Rules, filed May 28, 2015 in the *OMPR* case.

20. Transcript of proceedings on September 16, 2015 in the *OMPR* case.

21. Declaration of Ryan Harada dated August 5, 2015. The declaration was attached to Downtown Capital's Petition for Waiver or Suspension of the VLT Standard in HAR § 15-217-55(k)(2), filed August 5, 2015.

22. Resolution Regarding Waiver Petition by Association of Apartment Owners of 801 South St.

23. Declaration of Scott Cody of Hawaiian Dredging Construction Company, Inc., dated September 29, 2015.

24. Declaration of Michael Baulig, dated September 29, 2015.

25. Photographs of the Project.

Downtown Capital will also present demonstrative aides.

Downtown Capital reserves the right to amend its exhibit list as additional exhibits are identified.

DATED: Honolulu, Hawai'i, September 30, 2015.

CALVERT G. CHIPCHASE
CHRISTOPHER T. GOODIN

Attorneys for Petitioner
DOWNTOWN CAPITAL LLC

HAWAII COMMUNITY DEVELOPMENT AUTHORITY

STATE OF HAWAII

In re:

The Application of

OLIVERMcMILLAN PACIFIC RIM, LLC,

Applicant,

To amend Development Permit No. KAK 12-075 by waiving or permanently suspending the requirement of HAR §15-217-55(k)(2) for the Symphony Honolulu project and that such waiver or permanent suspension be retroactive from April 5, 2015.

TRANSCRIPT OF PROCEEDINGS

Wednesday, July 22, 2015

Taken at 547 Queen Street, Second Floor
Honolulu, Hawaii 96813
commencing at 9:01 a.m.

Reported by: LAURA SAVO, CSR No. 347

EXHIBIT 1

A P E A R A N C E S

John Whalen, Chairperson

Steven Scott, Vice Chairperson

Aedward Los Banos, Acting Executive Director

Deepak Neupane, Dir. of Planning and Development

Lori Tanigawa, Deputy Attorney General

BOARD MEMBERS:

Beau Bassett

Jade Butay

Scott Kami

Tom McLaughlin

William Oh

Jason Okuhama

Mary Pat Waterhouse

ALSO PRESENT:

For Petitioner OliverMcMillan Pacific Rim, LLC:

D. SCOTT MacKINNON, ESQ.
SCOT MATAYOSHI, ESQ.
JESSICA M. WAN, ESQ.
McCorriston Miller Mukai MacKinnon, LLP
500 Ala Moana Boulevard, Suite 5-400
Honolulu, Hawaii 96813

For Respondent HCDA:

DIANE TAIRA, ESQ.
Deputy Attorney General
425 Queen Street
Honolulu, Hawaii 96813

I N D E X

			PAGE
Call to Order			5
Presentation by Applicant			9
Presentation by HCDA			68
Adjournment			105
WITNESSES FOR THE APPLICANT:			
DAVID MILLER			13
Examination by:	Member Bassett		15, 18
	Member Butay		16
	Member Okuhama		16
	Member McLaughlin		20
JON WEIR			24
Examination by:	Chair Whalen		27
	Member Bassett		28
	Member McLaughlin		30
KEITH CHAN			39
Examination by:	Member Bassett		42
	Vice Chair Scott		45
JEANNE MURATA			50
DAN NISHIKAWA			55
Examination by:	Vice Chair Scott		57
	Member Kami		61

I N D E X (Cont'd)

WITNESSES FOR HCDA:		PAGE
PATRICK YEN		
Examination by:	Chair Whalen	84, 88
	Vice Chair Scott	87
	Member Bassett	90, 96
	Member McLaughlin	94

EXHIBITS ADMITTED FOR THE RECORD:

Petitioner's Exhibits A through J 7

HCDA Exhibit A 68

(Exhibits retained by HCDA Board members and counsel.)

PUBLIC TESTIMONY BY:

John Kobelansky 97

Clara Morikawa 104

Honolulu, Hawaii July 22, 2015, 9:01 a.m.

-o0o-

CHAIR WHALEN: Good morning. I'd like to call the order to July 22nd, 2015, public hearing for the Hawaii Community Development Authority. The time is now 9:01 a.m. Thank you for your interest in Kaka'ako and your attendance today.

My name's John Whalen, chairperson of the Authority. Let the record reflect that the following Kaka'ako members are present: John Whalen, Jade Butay, Steven Scott, Jason Okuhama, Tom McLaughlin, Scott Kami, Beau Bassett and Mary Pat Waterhouse.

So the first item is the appearance for the Authority. Will the counsel for the Applicant introduce their party? Thank you.

MR. MacKINNON: Yes. Chair Whalen and board members, Scott MacKinnon, counsel for OliverMcMillan Pacific Rim, LLC, the Petitioner, and I have to my right Daniel Nishikawa, President of OliverMcMillan Pacific Rim, LLC.

(Whereupon, Member Oh joined the proceedings.)

CHAIR WHALEN: (To Member Oh) Good morning.

Pursuant to Hawaii Administrative Rules 15-219-98, Petitioner OliverMcMillan Pacific Rim, LLC, requests that the HCDA amend Development Permit No. KAK 12-075 by waiving or permanently suspending the requirement of Hawaii Administrative Rule 15-217-55(k)(2) for the Symphony Honolulu project and that such waiver or permanent suspension be retroactive from April 5th, 2015.

The purpose of the hearing is to allow -- excuse me -- is to allow the Applicant/Movant to present petition for waiver and suspension and afford the public the opportunity to comment on the petition. We will first have the Applicant present its case. The staff will then present its report. The Authority will then receive public testimony and comment.

Mr. MacKinnon, is there any exhibits you intend to admit to the record?

MR. MacKINNON: We have provided an exhibit list to counsel on Monday. Those are the exhibits. They include ones that were submitted on Monday as well as the letters that were attached to the original petition that was filed.

CHAIR WHALEN: So board members will find those exhibits in their packet and also in this

purple/lavender sheet.

MR. MacKINNON: Right. I will make reference to where the exhibit -- which exhibits we're talking about because there was a difference between the ones that are attached to the exhibit list and the ones that are part of the original petition. The original petition is essentially the letters.

CHAIR WHALEN: Oh, right. Yeah, there's actually a yellow folder also. They're kind of grouped together. So I didn't see that there were two parts to it. Thank you.

There being no objection, does the staff -- first of all, does the staff have any objections regarding the Applicant's proposed exhibits?

ACTING EXECUTIVE DIRECTOR: No.

CHAIR WHALEN: There being no objection, Applicant's Exhibits 1 through 7 are admitted to the record. A through J are admitted to the record.

(Exhibits A through J are admitted.)

CHAIR WHALEN: Mr. MacKinnon, are there any witnesses that you seek to designate as expert witnesses?

MR. MacKINNON: Yes, there are. That would be Jon Weir, David Miller, Keith Chan, Jeanne Murata and John Gustafson.

CHAIR WHALEN: Does the staff have any objections regarding the designation of such individuals as expert witnesses?

ACTING EXECUTIVE DIRECTOR: No objections.

MR. MacKINNON: Chair, I neglected David Munn --

CHAIR WHALEN: David Munn?

MR. MacKINNON: -- of Chelsea Group. Yes, David Munn of Chelsea Group.

CHAIR WHALEN: Munn?

MR. MacKINNON: Munn.

CHAIR WHALEN: M-u-n-n?

MR. MacKINNON: M-u-n-n.

CHAIR WHALEN: Okay. There will be no objection to the admission of these witnesses, including the last named?

ACTING EXECUTIVE DIRECTOR: None.

CHAIR WHALEN: They will be designated as expert witnesses.

Mr. MacKinnon, you may proceed with your presentation.

MR. MacKINNON: Thank you, Chair.

The purpose of this hearing today is to consider the petition -- the portion of our petition that was filed dealing with, specifically, waiver and/or permanent suspension of the -- what we refer to as the Glass Rule or the VLT rule, which requires that the glass or glazing in a project in the Kaka'ako District have a VLT level of 50 percent or greater, and our contention that that rule creates a serious conflict with what is referred to in the rules as the Green Building Rule, which is in a separate section of the Mauka Area Rules, and that it makes it extremely difficult, if not impossible in certain circumstances, to comply with both rules in the design of a curtain wall or glass wall sort of building; and that based upon the expert analysis and information that was available to OliverMcMillan at the time that its glazing decisions were made back in 2013, that there were commercially available at that time, you know, basically no glass products which achieved the energy savings which was necessary to satisfy the Green Building Rule and contained a VLT level of 50 percent or greater.

We recognize that the modeling that is done in conjunction with that sort of initial analysis is all based upon a hypo -- first, a hypothetical building that's designed to meet what's referred to as ASHRAE 90.1 standards for a building, and then that is compared against an estimate and calculation of the designed building. That designed building is going to be based upon the state of the plans at the time that that analysis is done, and in the typical construction process, that's going to be done fairly early in the process, and the stage of completion of those construction plans is not going to be to the level or detail that will be available at the time the building permits are issued. But glazing is a major component of what gets purchased for a project, and those decisions have to be made early in the game.

So the Notkin analysis and survey that was done was based upon the plans that were in existence in 2013 when that was done, and their assumptions, which engineers -- all engineers make in constructing these hypothetical models, and those factors and assumptions, every engineer probably makes slightly different assumptions and

deals with those factors in a slightly different way, so that the end result of the modeling, it is not that uncommon for it to vary from engineer to engineer. But from our -- from OliverMcMillan's perspective, we were dealing with the modeling and the information that had been produced by our expert, and our expert's modeling had -- was independently reviewed and confirmed as being an appropriate manner in which to do it. And so those -- those calculations and decisions were important to the decisions that OliverMcMillan made with respect to the glazing issue.

The other thing that we think is really important is that we think we will demonstrate both in our petition and with testimony today that there is a direct correlation between a higher VLT or visible light transmittance level and the level of the solar heat gain coefficient which exists inside the room. It's important to know the distinction between those two. One, basically, is a measure of the amount of visible light that is transmitted through the window into the interior. It's important to know it's the interior. That's what's the measure of. Solar heat gain coefficient is a performance measure, and it measures the amount of

solar heat that is transmitted through the window into the unit and is a primary factor in the consideration of what's necessary to cool the premises for purposes of comfort of the people who may live inside that building.

So we'd like to present our witnesses today to, basically, support and suggest that we believe that the VLT rule has certain unintended consequences as a result of its practical and real application within buildings in the Kaka'ako District, and that we would respectfully request in the case of the Symphony project, that the VLT rule be waived or permanently suspended in order to enable Symphony to proceed with the construction and completion of a building which is, in our view, significantly more energy efficient than can be obtained through the use of any available glass with a VLT rating of 50 or greater.

So our first witness is David Miller of Architects Hawaii. Mr. Miller's resume is Exhibit E in your exhibit list, and his letter of comments and professional opinion was attached as Exhibit 1 to the petition.

CHAIR WHALEN: Okay. As each witness approaches, because of the nature of this hearing,

I ask each witness to raise his or her right hand and swear or affirm they will tell the truth.

MR. MILLER: I will tell the truth.

CHAIR WHALEN: Okay. David Miller tells the truth.

DAVID MILLER,

called as a witness by the Petitioner, was sworn/affirmed to tell the truth and testified as follows:

THE WITNESS: Good morning, I'm David Miller. I'm chairman and principal of Architects Hawaii.

We believe that planning rules which support energy conservation should do so through coordinated technical requirements not singling out one factor of many in making glazing decisions for a high-rise residential building in Hawaii's sun and heat environment.

Basically, higher VLT equates to a larger solar heat gain coefficient and less energy efficient glazing. This translates to more costly mechanical systems needed to offset heat gain within units, and then translates to higher monthly energy costs for residents. More costly mechanical systems directly affect sales prices, making units

less affordable to Hawaii's local population.

HL has compiled a comparative spreadsheet of built and under construction high-rise condominium projects under HCDA and city and county, which is attached to our letter filed with the petition and also has been created into a demonstrative exhibit you see before you here. This chart illustrates first that the achievable solar heat gain coefficient increases as VLT increases, and also that no project on the chart would meet the VLT requirement of the Glass Rule, none above 40 percent. You see the VLT along there with the solar heat gain coefficient. You can look at the individual projects.

To the best of our knowledge, Symphony's VLT value is above average amongst this group and offers on average a higher energy performing solar-heat-gain-coefficient value which translates to greater energy savings.

Through our research, leading glazing manufacturers and experts recommend VLT values within 20 to 40 percent for an appropriate balance of light quality, interior comfort and energy conservation. An increase of VLT above 40 percent is prone to produce undesirable heat gain, glare

within the units, and cast heavy shadows in the units of interior spaces. In these cases, building occupants were found to close shades during daylight hours, effectively removing LEED-endorsed provision of views and also causing lights to be on during the day and sometimes sunglasses.

In conclusion, we believe that this 50-percent-VLT-or-greater requirement should be waived as to Symphony to allow for a more sustainable and energy efficient building than would otherwise be feasible. And, also, that this minimum VLT requirement in the HCDA Mauka Rules should be reconsidered and modified to facilitate greater flexibility in the architectural and engineering design of more sustainable and energy efficient buildings in the Kaka'ako District.

Thank you.

CHAIR WHALEN: Members, are there any questions for this witness?

EXAMINATION

BY MEMBER BASSETT:

Q I have a question.

You mentioned three things, you said, that relate to the VLT. You mentioned life -- light quality. You mentioned three factors that

were relevant when it came to benefits of a lower VLT.

A Light quality, interior comfort and energy conservation.

Q That's it.

A You're welcome.

CHAIR WHALEN: Do you have any questions, Jade?

EXAMINATION

BY MEMBER BUTAY:

Q What is the energy savings from having, you know, what they're installing versus the requirements? What would be the energy savings?

A I think the specifics of that, I would refer to one of our colleagues who are the engineers and technical consultants to give an accurate response to your question. Those are complicated answers to a straightforward and relevant question. I think they can address that better than I could. It's outside of my area of specific expertise.

CHAIR WHALEN: Any other questions?

EXAMINATION

BY MEMBER OKUHAMA:

Q I just had a real -- more of a practical

question because I live in a building that is all glass, but an old building. But you mentioned that if -- with this level of glass, you really don't have to shut the shades during the day when it's bright sunlight? I'm just kind of curious because when it's bright, I have to shut our shades anyway because the sun comes through, and I'm afraid of the damage it's going to cause because of the heat and such. But you just mentioned earlier about not having to, I guess, close the shades. Does this glass actually allow you to do that when you have this kind of level of glass?

A Well, you know, I think with all of these things, as is the intent of the design and LEED, these are all shades of gray. They're combinations of factors that, when they're combined, create the best possible solution, and that's not to say that there will never be a case where you won't have to pull the shades down.

Our office is floor-to-ceiling glass, and at certain times of day, we do pull the shades to some degree. Some are in the morning and then raised up and so on. But it's not to say that anything is a guarantee, but I think what we try to achieve is an overall acceptance and comfort factor

for a style of living in a high-rise that allows you to enjoy the view and looking out through the window most of the time and be as comfortable as you can as far as the heat gain at the same time at different times of day. So it's all shades of gray, and I think my colleagues could maybe answer that more specifically, more technically, but I think that's the big picture of it.

Q Okay. Thank you.

MEMBER BASSETT: I just have another question.

CHAIR WHALEN: Yes.

EXAMINATION

BY MR. BASSETT:

Q You mentioned kind of an optimal range as far as VLT goes and as far as maximizing the three elements: life quality, interior comfort and energy savings. What is the fear if you have a VLT that is too low? What is the detriment of that situation?

A If it's too low? I would think there isn't very much fear in a VLT that's low.

Q Because if it's low, that means that there's very little light that's coming through.

A But I don't believe that that means that

you won't be able to see through the glass, and I think Jon Weir, our expert on glass and glazing, could answer that question. I don't think it's that -- it's not that directly relevant.

Q When it comes to -- I mean, I was looking at your resume, and a part of it has you're a specialist in cultural requirements?

A I would say that I am -- we've been involved with them in our projects and, of course, I'm --

Q So from a cultural standpoint, like Hawaii environmental standpoint, is there a detriment to having a VLT that is too low?

A From my understanding of it, I would say that there is not. I personally -- these glasses turn gray when the sun is out, and I've been living in Hawaii for 45 years, and I don't find that to be a problem. The VLT and the technical advances of glass are so significant now, that it's not like the old days where you put a dark -- glass becomes dark or it becomes a mirror. The glass is, basically, you can see through it with a whole variety of different VLT factors, and I don't think that it has any negative effect on the enjoyment of living in Hawaii and enjoying the view and the

outside environment and not feeling hot. I think it's all about that.

Q What about from someone who's on the outside? I think you're talking about the experience of someone who's inside of a unit.

A Uh-huh.

Q What about the people on the outside, the rest of the community?

A Again, I think our technical people can explain it in detail, but VLT is not about the outside at all. It's not measured from the outside. It is not about the outside. It is entirely a factor, as I understand it, that relates to the inside, and that's how it's measured.

Q Is there a correlation that you know of between VLT and reflectivity of glass?

A To my knowledge, there is not. They're not related. One does not have any correlation to the other. And, again, I think our people could explain that better than I can.

Q Okay. Thank you.

A You're very welcome.

EXAMINATION

BY MEMBER MCLAUGHLIN:

Q Many of the projects or several of the

projects shown are mixed-use facilities, meaning that there may be a difference between the VLT and the heat gain coefficients for the lower floors, the retail components and/or other service components, commercial components versus the residential components. First -- my first question is are these statistics that are shown, are they an average of the entire facility, including the commercial as well as the residential components, and how much of a disparity exists between the two? And my second area of that is just to ask you for your perspective when you're talking about this subject, does your opinion change in any way when you're talking about the commercial components of a mixed-use building versus its residential elements?

A That's a great question. I think getting the first part of your question, our team at Architects Hawaii tried to compile information as accurately as we could. We're not professional surveyors. We called owners and contractors and we found out what we -- glass suppliers to find out the information on -- on that chart. So I don't think that -- and I was not in the trenches about that. So I couldn't tell you whether or not that is an average. I believe it is more the glass for

the residential portions of the project. So that would be my answer to the first part of your question.

On the second part, it's a very interesting question because, in general, there has been and now is a very, I think to me, a very positive increase in the effort that is a joint effort of government and private sector in increasing the urban quality and the street quality of our neighborhoods in cities and here in Honolulu, and part of it is to give a more interesting environment at ground level. And so retail people have always wanted a lot of visual connection from the inside of their stores to the outside, and so a higher VLT would contribute to that from both sides. And so it is -- I think it is normal in today's design world to expect that the glass at street level would be very transparent in appearance, but that isn't necessarily the case in the high-rises.

Again, from my own experience and from what I've heard, people in high-rises don't always like very clear glass. They don't feel -- they feel sometimes that privacy is an issue, and glare can be an issue, and even fading of fabrics and

various other things can be -- those can all be issues. So there are differences in the sort of acceptance and goals when you're doing glazing down to ground level versus when you're doing it up in the air. I hope that helps.

CHAIR WHALEN: Thank you. Any other questions from the Board?

Do staff have any questions for this witness?

ACTING EXECUTIVE DIRECTOR: No questions.

CHAIR WHALEN: Did you want to proceed in order, Mr. MacKinnon, with your order of witnesses?

MR. MacKINNON: Yes.

CHAIR WHALEN: Okay. Next one would be Keith Chan.

MR. MacKINNON: Actually, next one is Jon Weir.

CHAIR WHALEN: Jon Weir. Well, fine. I'll let you name the next witness then. Thank you.

MR. MacKINNON: Okay. Jon Weir's resume is Exhibit B to the exhibit list, and his affidavit is Exhibit A, and he provided a support letter with the petition, which is Exhibit 2 to the petition.

CHAIR WHALEN: Okay. Mr. Weir, if you

could do what Mr. Miller did. Raise your right hand and affirm that you'll tell the truth.

MR. WEIR: I will tell the truth.

CHAIR WHALEN: Okay. Thank you. Please proceed.

JON WEIR,

called as a witness by the Petitioner, was sworn/affirmed to tell the truth and testified as follows:

THE WITNESS: Hello. I'm Jon Weir. I am President of JA Weir Associates. I'm an exterior wall consulting firm and working on the Symphony Honolulu project.

Good morning, by the way.

When starting in the exterior wall industry back in 1982, we made glass choices very differently. We chose by color, by many things. Most times it wasn't even a double-glazed unit. Obviously, energy codes have changed a lot since then. We've made a lot of strides forward. We've tried to save a lot of energy. And at this point in time, really our choices are more about the performance of the glass than it is about maybe the aesthetics. Obviously, they still come into play. I'm sure David would argue with me on that one.

There is a direct correlation between visible light transmittance and the solar heat gain that's inside of a building. Visible light transmittance is the amount of light that goes through the glass and gets inside the building. This light then heats the air which becomes the solar heat gain. So it's a direct correlation. What we try to do is we try to limit the glass or the amount of light that comes through the glass in order to gain a better solar heat gain coefficient, and that is simply the characteristic of the glass that will block the heat. Anything that's not blocked, we have to take care of with air conditioning or closing the shades or whatever it may be.

All right. High performance glass does aid in this process. It does lower the visible light transmittance. It does some other things with regards to infrareds and all, but the main issue is the visible light transmittance. We quantify it by calling it the solar heat gain coefficient, and that's what any glass company's brochure is going to have on -- to describe the glass and its energy performance.

Our goal on Symphony Honolulu was to meet

a solar heat gain coefficient of .19. Numbers are probably not that important at the moment, but what we did was we researched far and wide. We found every glass we could possibly find and we worked towards that end. That .19 was very important. We ended up finding a glass that could do that, and that is the glass we have on the tower now.

In the report that the Board had offered us, the peer report, there were multiple other glasses with a visible light transmittance of over 50 percent and/or greater and they were mentioned as alternatives. None of these met the .19. The closest was .22, which is, obviously, with solar heat gain coefficient, the lower the better. The .22 is very much larger and would amount for quite a bit of energy.

The Glass Rule itself, in my opinion, is flawed. It's flawed simply because it's based directly on visible light transmittance as much -- and more than anything else. What we need, effectively, is to also bring into account the solar heat gain coefficient, the other factors that we use every day in designing these buildings, and if we can do that, we can reel it in a little bit with regards to how we can come up with a happy

median versus just visible light transmittance, because at the end of the day, visible light transmittance is an aesthetic, not a performance issue. Thank you.

CHAIR WHALEN: Any questions for the Board -- from the Board?

I have just one question.

EXAMINATION

BY CHAIR WHALEN:

Q Because there's a lot of interest in recent years, particularly for energy conservation in buildings, are there constantly new products being developed that were not available maybe four years ago or three years ago whenever -- whenever you selected this?

A Funny enough, some of the glasses that were listed in the peer report are rather new into the industry and were probably very, very new at the time we were designing Symphony Honolulu. The report also mentioned a triple-glazed unit that could get us pretty close to where we needed to be.

The triple-glazed unit, I have to be a little careful on because it would almost double, if not double, the cost of the glass and the exterior wall system to the building, and I won't

speak on the owner's behalf, but we have a budget to try to build these buildings, and, frankly, I don't think many buildings could pay what ends up being 40 or $50 a square foot for glass. The system would also have to be changed because it couldn't hold the thicker glass.

So sorry for the long answer to your question, but there are different types of technology coming along. There are the other types like Soladigm, which is now viewed where it is a dynamic and electric glass that's being used that is in its infancy, but it has a 90-some-odd percent rejection rate in manufacture. We're just not there yet.

CHAIR WHALEN: Okay. Thank you.

MEMBER BASSETT: I have a question.

CHAIR WHALEN: Yes.

EXAMINATION

BY MEMBER BASSETT:

Q We're not just there yet. What do you mean?

A Well, they continually work on these projects, and one day, they should be able to have products that can be a little more dynamic and reactive, you know, to the environment. It may be

able to go darker, you know, when it is under, you know, direct sunlight or something, but we're probably 10 or 15 years out, and we also have to integrate a lot of electronics into the systems to do that. But, you know, in a question as to will there be other things in the future, I do believe there will come a time, yes.

Q So the glass that was ordered, it was ordered in 2013?

A Probably right around in that time, whatever the contractor did.

Q Were you the consultant that was working with them at that time?

A Yes.

Q And when you recommended this glass, you knew that it didn't meet the rule?

A We were trying to meet the solar heat gain coefficient. As far as all the rules and everything else as a group, we're trying to do a job. I don't know exactly at that time what I knew and what I didn't know as far as what it met and what it did not meet. So my apologies. I don't have a clear answer on that. I truly don't know.

Q At that time were you aware of the VLT rule?

A My client, which is Architects Hawaii, made me aware of that rule, yes.

Q There was a discussion about it?

A I'm -- I'm sure there could be discussions about it.

Q Now that's it's 2015, is there a glass that is available that would be able to meet this one -- .19 SHG and still meet the VLT rule?

A No.

Q There's not?

A There's none yet.

Q Thank you.

A Yes?

EXAMINATION

BY MEMBER MCLAUGHLIN:

Q Pardon me for what's probably a stupid question, but in many of the older buildings, film and tinting is used on the glass, and I guess my question is, is a combination of tint plus glass, does that bring you to your goals or is that considered in this mix at all?

A Oddly enough, the tinted film would get us in trouble with you all because it also cuts down on visible light transmission. The Pacifica Tower, I believe, is tinting some of their windows

now because there was somewhat of a glare issue perceived, and so we do have some jobs that are actually going back that we did not do enough.

The question was brought up earlier about, you know, glare and visible light transmittance, and Viracon is one of the biggest companies -- North American companies that make this high performance glass, and Viracon recommends somewhere between 25 and 35 percent visible light transmittance. That doesn't mean that's what your rule needs to be. It's simply that's what they found.

With regards to the bottom of the building, I know we're at 70 percent visible light transmittance, and I think it's wonderful. The issue I have there is doing BMW dealerships and some of these other jobs that I've done over the years, if I go to the BMW design website, they tell me what it has to be and it's usually 70 percent or more. But a lot of times, it's already told to us by the people that are paying for the space.

CHAIR WHALEN: Any other questions from the Board? Mary Pat Waterhouse?

MEMBER WATERHOUSE: I have a question for either the petitioner or their attorney. Is that

appropriate? It's related to this matter.

CHAIR WHALEN: I guess we would just have maybe the witness --

Is it relevant to this particular testimony?

MEMBER WATERHOUSE: It's related to this issue.

CHAIR WHALEN: Okay. Certainly, go ahead.

MEMBER WATERHOUSE: I just wanted to find out if the petitioner was aware of this issue early on, you know, that it didn't meet the VLT requirement, you know, early on when this occurred, why wasn't a waiver requested earlier? Why was it done, you know, in February?

MR. MacKINNON: Well, the process actually started a little sooner than that. That's when the process, you know, got into the more formal process, and there was certain decisions that were made. You know, part of this is, you know, we did obtain a superstructure permit in January of 2014, which did include the glazing, and, you know, that was passed through and the permit was issued. So --

MEMBER WATERHOUSE: That's not the same

as the building permit.

MR. NISHIKAWA: I can answer.

Good morning. In response to your question, we were told just like our glass consultant that we had to have a .19 solar heat gain coefficient in order to meet the LEED, and as a developer, LEED is a very important priority for us and it's a priority on all of our projects, not just here in Hawaii.

MEMBER WATERHOUSE: So who directed --

MR. NISHIKAWA: Our engineers did their calculations, and based on the calculations that our engineers did, just like they told our glass consultant to find a glass that had a .19 solar heat gain coefficient in order to meet LEED, so we then were given -- he provided several -- I don't know -- five or six different pieces of glass for us to pick from that met this criteria. So us being focused on meeting LEED and we knew that was one of the rules, we said we will pick one of these five or six glasses that was presented to us to pick from that met the solar heat gain coefficient of .19 and that's how we proceeded.

THE WITNESS: And if I may add, this decision did not happen overnight. This was an

extremely long and drawn-out decision with regards to choosing a glass on this tower.

MR. NISHIKAWA: Yeah, he is right. We actually had a different glass picked out that had a higher solar heat gain, and what was told to us that the glass that we had originally picked out, we needed to pick a more expensive, more energy efficient glass. So we actually changed from a previously --

We thought we were going with another piece of glass, and then because of the calculations done by our engineers and our LEED consultants, they told us, you know, we're going to have to pay more money for a higher quality glass to meet this .19. So that's, you know -- that was a priority and we decided to do that. So we went with a more expensive, higher performing glass to meet this criteria. So you're right. We did go through an iteration. I forgot about that.

THE WITNESS: We went through quite a --

MR. NISHIKAWA: Yes.

MEMBER WATERHOUSE: So about when did this occur?

MR. NISHIKAWA: I got my team here. So I don't want to quote dates and I'm not --

MEMBER WATERHOUSE: About.

MR. NISHIKAWA: Kris, do we know exactly about --

MEMBER WATERHOUSE: Like what month?

MR. HUI: We selected glass probably June of 2013.

MR. NISHIKAWA: Yeah, June of 2013. So it's been --

Like I said, these projects take a long time to develop and design, and, of course, these energy calculations are critical for us to make sure that we have the right glass to meet the LEED and energy requirements. So --

MEMBER WATERHOUSE: Okay. So --

MR. NISHIKAWA: That's why I couldn't tell you the date. I apologize for --

MEMBER WATERHOUSE: No, no, no. That's all right.

So going back to my original question, if it was in June in 2013 that you knew that you wouldn't be able to meet the VLT, why didn't you submit a request for waiver at that time?

MR. MacKINNON: You know, I think it's a combination of dealing with brand new rules and being somewhat naive. I think that in that

standpoint, the initial determination was that the energy savings requirements of the "Green Building" rule were the paramount rule, and that we could work out, you know, informally, administratively with staff the issue of, you know, the VLT requirement in light of what we saw as a conflict in those -- those two rules. It was subsequent that we learned that that was not a feasible means of addressing it, and that we were going to --

You know, we initially had discussions with staff about the possibility of whether there was an administrative review process could be done. The end result was that we were told that under the rules, the new rules, the only formal way in which we could address it was to file a petition for waiver or suspension of that rule in order to do it.

So, you know, would we have liked to have known and maybe been a little smarter to have started the process earlier? The answer would be yes, but, you know, we're the first project built or being built under the new rules. It is a whole revamping of the rules, and, you know, it's a process that took some time to get to the stage where the determination was the way in which this

would have to be addressed is the manner in which it's being done now.

THE WITNESS: With all due respect, we had the glass type in the specifications. It was one of the sections that I wrote. But up until the time the architect approves a final visual sample, and in this case that we get approval by ownership on the color and what they want it to look like, just because it was in our specification did not mean that it would end up on the tower. We have many, many projects where what we specify never ends up on the tower.

So it gets a bit confusing because we've made a choice. We've made a lot of work with regards to the energy model, but until the final okay and approval is there, we're not sure what glass will be there. I know it sounds confusing, but that is construction today.

CHAIR WHALEN: Beau?

MEMBER BASSETT: I think it's directed to Mr. Nishikawa.

MR. NISHIKAWA: Yes.

MEMBER BASSETT: We've been hearing about this figure of .19 SHG. Sorry. H -- SHGC.

MR. NISHIKAWA: SHGC, correct.

MEMBER BASSETT: Where does that figure come from?

MR. NISHIKAWA: It came from our engineers as part of their calculations on achieving the LEED. So, unfortunately, I'm not the expert on that. So I know that we were presented with the choices from the glass consultant that met the requirements -- in our view, that would meet the --

MEMBER BASSETT: Is your engineer --

MR. NISHIKAWA: Yeah, he's here --

MEMBER BASSETT: -- going to be here as a witness?

MR. NISHIKAWA: He's one of the people, yes.

MEMBER BASSETT: Thank you.

CHAIR WHALEN: Any other questions of Mr. Weir?

Thank you for your testimony.

Staff, do you have any questions?

ACTING EXECUTIVE DIRECTOR: No questions.

CHAIR WHALEN: Didn't mean to overlook.

MR. MacKINNON: Keith Chan.

CHAIR WHALEN: Keith Chan will be the next? Okay.

MR. CHAN: Good morning.

CHAIR WHALEN: Good morning, Mr. Chan. If you'd raise your right hand and swear that you will -- or affirm --

MR. CHAN: I affirm I will tell the truth.

CHAIR WHALEN: Okay. Thank you. Please proceed.

KEITH CHAN,

called as a witness by the Petitioner, was sworn/affirmed to tell the truth and testified as follows:

THE WITNESS: My name is Keith Chan. I'm president of Notkin Hawaii. I've been practicing engineering in Hawaii since about '82. As mechanical engineer in Symphony -- in the Symphony Honolulu project, we did review the building's ability to comply with LEED requirements. Specifically, EAp2 is what I'm talking about, which is the "Energy Atmosphere Prerequisite" minimum energy performance that requires demonstration of at least 10 percent savings over a baseline building.

So there's many approaches to building energy simulation, but in general for LEED

compliance, we follow ASHRAE 90.1-2007. And there are specific requirements in that, but they all involve creating a baseline and a proposed model.

The simulation, it's hypothetical. So the engineer has to put in some of the inputs based on their experience and judgment. There's factors and assumptions in the final output. So, you know, it affects the percentage savings. Some people call it estimate and not exact number.

For the building simulation we're referencing, Notkin Hawaii used plans available in mid 2013 prior to -- well, immediately prior to the Symphony glazing order, and we're the ones that came up with the .19, basically, and we used modeling software Carrier 4.6.

We understand the Douglas Engineering report, which we were given an opportunity to review. They used the construction set available in 2015, and they used updated software Carrier 4.9.

These factors, they may have some difference in outputs. The table, which is right here attached in the petition and used as a demonstrative exhibit, shows a comparison. And what that first column shows, of course, is that

.19 is what we basically told Symphony Honolulu. I mean, to the best of our ability, we did the model. We did the building energy simulation, and that's what we came out with in mid 2013.

Now, the other two columns were recently -- more recently done, but we basically inserted these glazing products, which were found -- which were available in the market with a VLT of 50 or greater, and we found only the glass that we show on that left column met the LEED requirement. So that is what we told Symphony in 2013, the Symphony Honolulu developer.

The Douglas Engineering report does mention a little bit kind of higher energy savings, but despite the differences, I think we do agree with their conclusion that higher VLT glazing will typically result in lower energy efficiency. So because in Hawaii, as we all know, heat gain from glass has such a great effect on air conditioning, it's very important. So strict enforcement of the VLT rule would not allow Symphony to achieve better energy savings for the project and would, in effect, mandate construction of the building with significantly higher energy use. So that's the conclusion of my statement.

CHAIR WHALEN: Board members, any questions of this witness?

MEMBER BASSETT: I have a question.

CHAIR WHALEN: Yes.

EXAMINATION

BY MEMBER BASSETT:

Q So this factor of 0.19, you said that was required to meet LEED standards. What would happen if you were to have a figure of 0.22?

A Okay. So from the table, it's actually shown -- your question is answered on the table. For the LEED project, we need 10 percent minimum. Better -- obviously, higher savings is better, but we're just meeting the 10.3 kind of with the .19. If you were to use the .22 --

Okay. The VLT 51 at the middle column and the .22 solar heat gain coefficient, that savings would drop down like half a percent or so to 9.7. If you go further and there's other, you know, glazing, I guess, a 26 would yield 8 something, you know, 1 and a half or something percent.

If you look at the Douglas Engineering report, they also have percentages. They compared, I think they said, somewhere between 2 and a half,

2.3 to 2.7 percent difference in the glazing that met the VLT rule versus the Symphony glazing. So their savings are actually higher than what we calculated earlier.

Q The ultimate figure that LEED is concerned about is the 10 percent savings?

A Yeah, for this EA -- well, the LEED itself, it's kind of a multitude of points, and they have credits for, you know, all sorts of things. One section deals with energy atmosphere, which is focused -- which what kind of we do is the energy model. So one of the prerequisites. It's not even a credit, which LEED gives additional credits for another -- it's called C-2. It's optimizing.

So it's a mandate from LEED, you must be 10 percent better than code minimum. So code minimum being the baseline building. So that's where the percentage comes from.

Q And so that 10 percent savings is specific to just windows?

A No. It's a whole building energy simulation. Windows actually -- I mean, that's why it's only a half a percent for the whole building even though if you look at the, you know, air

conditioning which is -- it's kind of complicated, basically. But solar heat gain coefficient is one factor in air conditioning, and air conditioning is like one of many factors in the whole building.

Q So what I'm hearing is that if you had an SHGC of .22, which brought you down to a minimum of 9.7 percent EA, there are other factors that you could have tweaked to get that up to 10?

A That's correct.

Q What are some of those other factors that you could have tweaked?

A Well, for example, you could put PV panels. You could change the air conditioning. You could change lighting.

Q When you say change air conditioning, what do you mean? How would changing the air conditioning affect the percent savings?

A You would have a more efficient system.

Q And after air conditioning, you mentioned something else. You said PV, air conditioning and --

A Well, I said PV, which stands for photovoltaic panels, which, you know, if they generate power, then that would subtract from the whole building.

Q And then you said the PV. You said the air conditioning, and then you said a third thing. Lighting?

A I said lighting, yeah. You can put in more efficient lighting throughout.

Q And if you did some of those things, that would bump you back up to the 10, potentially?

A That's correct, yes.

Q Thank you.

CHAIR WHALEN: Any additional questions?

EXAMINATION

BY VICE CHAIR SCOTT:

Q I don't know if this is directed to you or directed to staff. What was the motivation -- in your estimation, what is the motivation to have a VLT of 50 and above for the public? I mean, what is the motivation to have that, and why were the rules put into effect? It seems like we put rules into effect that also conflict with the energy component.

A Right.

Q So I guess maybe this is to staff why it goes back. I mean --

A I wouldn't know.

Q -- what is -- what is the advantage to

the public to have a higher VLT? You're talking about the public that's outside the building. I know from the inside of the building, obviously, you don't want to be living in a fishbowl --

A Right.

Q -- where everyone can be looking in.

A Right.

Q But from the outside, what is the advantage to the public to have a higher VLT of 50 and above?

A I would have to defer to the architect. I didn't even really look at VLT until recently. It's not something -- it never comes into the energy model. There's no input in our program for VLT. So it's -- really, it's out of my expertise. I mean, even as a homeowner, I don't even look at that when I buy --

Q Well, looking at VLT now --

A -- windows.

Q -- if you have a higher VLT, that makes it harder to get the 10 percent savings?

A Right. There's a direct correlation, as was explained before, between VLT and solar heat gain. So from my standpoint, I mean, my expertise is energy, designing air conditioning systems.

It's mechanical. So from my standpoint, it just makes it harder to meet -- kind of handcuffs us in a way because we have this kind of real high glass, and we have to do other things just because the glass is so inefficient.

CHAIR WHALEN: I think maybe you can let Mr. Chan off the hook on this one in terms of the public purpose of the regulation and direct that question to staff.

ACTING EXECUTIVE DIRECTOR: That I would defer the hot seat.

CHAIR WHALEN: It will be warm, but it will give us a better idea about the origin of the rule.

You didn't name anyone from Torti Gallas as a witness, but you did submit a letter.

MR. MacKINNON: We submitted -- yes, we submitted a letter from them. They were not available.

MEMBER BASSETT: I have a question for Mr. Nishikawa.

MR. NISHIKAWA: Yes?

MEMBER BASSETT: Did you consider meeting the VLT rule and adjusting your AC, your photovoltaic situation to meet the LEED standards?

MR. NISHIKAWA: You know, actually, we actually have photovoltaic, and that's one of the things because of our concern for meeting LEED and green energy, we -- from the get-go, we wanted to make sure that we actually incorporated photovoltaic into our design. So as I stated before, we were presented with the same criteria that our glass consultant was that we had to achieve this .19. We're not -- unfortunately, not the experts on solar heat gain in what we needed to meet to meet the LEED, and we were given choices from our professionals that basically said we had to change the glass that we were originally intending to use to a much higher performance glass to meet the LEED, and we're happy to do it based upon the calculations provided.

So I guess what I'm trying to say is we weren't -- we weren't saying, You can choose this glass and then you're not going to meet LEED, or then you can choose this glass which are going to meet LEED. You make that decision at that time." We weren't presented with that at the time. I'm just telling you our decisions were based upon meeting LEED from the information given by our consultants. So --

MEMBER BASSETT: Who was your LEED consultant?

MR. NISHIKAWA: Chelsea Group.

CHAIR WHALEN: Which is the other witness, Mr. Munn; right?

MR. MacKINNON: That's correct.

MEMBER BASSETT: So I'm hearing you weren't told --

MR. NISHIKAWA: We weren't presented, yes.

MEMBER BASSETT: -- that you could meet the VLT standard and you could meet your --

It would only bring you up to 9.7, but you could make that up by --

MR. NISHIKAWA: Correct.

MEMBER BASSETT: -- putting more energy efficient lights?

MR. NISHIKAWA: Correct. In fact, we had a different glass with a higher solar heat gain originally kind of earmarked for the project because we thought that was a nice piece of glass that would work for us, and then we had to change that glass because we were told about the .19. So we revised our selection to this higher performing glass.

MEMBER BASSETT: Thank you. I have a question for -- never mind. Thank you.

CHAIR WHALEN: Any other questions before we ask staff if there are any questions? Any questions on the Board, I should say, before we ask --

Staff, do you have any questions of this witness?

ACTING EXECUTIVE DIRECTOR: No questions.

CHAIR WHALEN: Thank you.

Next witness.

MR. MacKINNON: Jeanne Murata. She's from Heyer & Associates. Her resume is Exhibit G, and the Heyer & Associates letter attached to our petition is Exhibit 4.

CHAIR WHALEN: Okay. Miss Murata, if you'd raise your right hand and swear or affirm that you'll tell the truth.

MS. MURATA: I affirm I will tell the truth.

CHAIR WHALEN: Thank you. Go ahead.

JEANNE MURATA,

called as a witness by the Petitioner, was sworn/affirmed to tell the truth and testified as follows:

THE WITNESS: Good morning. My name is Jeanne Murata. I am the principal broker and director of project sales for Heyer & Associates. We are currently the exclusive project broker for Symphony Honolulu for OliverMcMillan Pacific Rim. We have also represented Pacifica Honolulu, which was a previous OliverMcMillan project.

Heyer & Associates specializes in high-rise condominium project sales in the Kaka'ako redevelopment area and Honolulu urban core. Heyer was directly involved in the sales and marketing of Nauru Towers, 1133 Waimanu, Hawaiki Tower, Hokua, Capital Place, Vanguard Lofts, Pacifica Honolulu, Waihonua, One Ala Moana, the Collection Honolulu and Symphony Honolulu.

Today buyers of new high-rise condominiums are much more knowledgeable, sophisticated and much more informed of glass systems used in buildings. Items such as shading coefficients or heat gain coefficients are often brought up in the sales process. Buyers also have expressed concerns regarding privacy and heat transmission through a building's glass. These concerns are so important for these new buyers of condominium projects, where Heyer & Associates, as

the project broker, often has to ask the developer to request for summaries of -- from their consultants regarding information on shading and light transmission for privacy and energy efficiency and heat transmission.

Heat transmission through building glass is such a critical part of a buyer's decision to purchase to the extent where a unit that faces the east can command more in price than the same reverse-type unit facing the west because of its perception of heat gain and the afternoon sun. Residential buildings with window walls are at high demand to capture views and become a standard for Honolulu.

I am in support of -- I am in support of OliverMcMillan's petition because Symphony Honolulu's project glass, as it currently stands, offers a balance between high energy efficiency to keep exorbitant costs down and also incorporates a sophisticated design. Thank you.

CHAIR WHALEN: Thank you. Are there any questions from the Board of Ms. Murata?

Staff, do you have any questions for Ms. Murata?

ACTING EXECUTIVE DIRECTOR: No questions.

CHAIR WHALEN: Thank you.

THE WITNESS: That's it?

CHAIR WHALEN: You may leave.

THE WITNESS: Thank you.

CHAIR WHALEN: Next witness you'd like to call?

MR. MacKINNON: We'd like to -- before the next witness, we'd like to make a reference for the Board to the affidavit of David Munn of the Chelsea Group, who was the independent LEED's consultant that was retained by OliverMcMillan and asked to review the Notkin modeling that was done that resulted in this chart over here, and in particular, the -- you know, the comments that are made in his paragraph 7, 8, 9 and 10 as to why they were retained and the results of their independent review of the modeling process that was used by Notkin. And their conclusion was that the model used by Notkin was an appropriate and accepted methodology within the energy industry, and that Notkin provided proper documentation listing the base building model and the as-design model as well as additional necessary documentation required by the Green Building Certification Institute.

So it's just to point out that

OliverMcMillan chose to have a peer review in effect done of the work done by Notkin as part of its process here so that we wanted to make sure that, you know, since we -- they were relying upon the findings of Notkin in their glass choices and decisions that they made, that that had been done correctly and were satisfied, and they're satisfied that it was.

CHAIR WHALEN: Board members, this is tab I on your packet toward the end. The affidavit. It's a short one. Just two pages.

I'd also like to note for the record that William Oh came -- attended the meeting. He entered just before the calling of witnesses. I'm sorry. I overlooked that. I didn't want to interrupt your introduction.

MR. MacKINNON: And last witness is Daniel Nishikawa.

MR. NISHIKAWA: First of all, thank you, Board and Mr. Chairman for this opportunity. We wish we could have brought this forth earlier in the process, and we do appreciate the opportunity to get this resolved, and we respectfully ask for your approval of this conflict.

OliverMcMillan is building mixed-use

projects throughout the country as well as here in Hawaii. We're proud of the work that we're doing here at Pacifica and Symphony, and we want to do many more projects. My team --

CHAIR WHALEN: If I may interrupt, I'm sorry. It's my oversight --

MR. NISHIKAWA: Sure.

CHAIR WHALEN: -- but I have to ask you --

MR. NISHIKAWA: Oh, I'm sorry.

CHAIR WHALEN: -- to raise your right hand and --

MR. NISHIKAWA: I'm sorry. I promise to tell the truth.

CHAIR WHALEN: -- swear or affirm to tell the truth. Thank you.

DAN NISHIKAWA,

called as a witness by the Petitioner, was sworn/affirmed to tell the truth and testified as follows:

THE WITNESS: OM is building mixed-use projects throughout the country as well as here in Hawaii. We're committed to top quality development, green energy. We specifically wanted Symphony to be a beacon for that, which is why we

always wanted to include photovoltaic as part of our initial build to help defer the energy for our buyers and users.

In our experience, VLT is typically a rule that's applied to ground floor, and in fact, our ground floor glass, I think it was asked earlier, is at a 70 percent VLT.

So if we had known about this conflict, we would have, you know, raised it much, much sooner. Bottom line for our purposes, we had Chelsea Group watching this process for us from the very beginning. It's not like we brought them in after the fact. They were there from the very beginning to make sure that our consultants were doing the right thing.

We had to make a lot of difficult choices, expensive choices in the beginning. This wasn't the glass we had originally picked. We were told by all of our professionals, including Chelsea, Architects Hawaii, Notkin, that this .19 was the factor that we had to choose. We were not given other alternatives to --

We weren't told at the time that, you know, we could have satisfied it with, you know, one or the other because, obviously, if that was

case, we would have explored all of those options, but we were told the .19 was the factor in meeting the LEED.

You know, I'm very thankful for my team. I think after reading the Douglas report, I can now understand that there are different ways to look at LEED which I was not aware of, but I have been made aware of that in reading the staff report, but I'm also glad that the staff and their consultants also concluded that there is a conflict and that the rule should be changed. So I'm grateful for that.

And if there are any other questions you have, I'm here to answer those questions, and like I said, we respectfully and humbly request your approval.

CHAIR WHALEN: Any questions for Mr. Nishikawa?

EXAMINATION

BY VICE CHAIR SCOTT:

Q I have a question.

A Steve.

Q Just for some background, you do a lot of projects on the mainland?

A We do.

Q Do you have these same issues up there in

terms of the VLT and the heat gain and trying to get to the .19?

A Yeah. Very good question. We don't have in any of our projects nationwide have run across a rule with a VLT for residential tower glass of over 50, and we do projects from East Coast to West Coast.

Q So Hawaii is just special?

A Hawaii is special. Well, it's actually even more of a factor here. I would say that the ironic thing is that Hawaii, we don't do any projects where the sun is more intense than it is here. And this 50 percent rule, the more we get educated on it also and as all the other buildings in Honolulu demonstrate, there's not one building in Honolulu that has a VLT in their residential tower of more than 50, and our charts show that. And I had asked our consultant whether those were averages. I think that was another question, and the gentleman from Architects, our consultant who prepared that, said that those were the glass types for the residential portions of those buildings. So that was --

I think, Tom, you asked that question.

So I think the chart that was presented

earlier of Architects Hawaii was not an average, but a reflection of the actual glass used in the residential portion of the tower. So to answer your question, we don't see this --

It is very much of a concern for all of our locations, and whether they're in a rental situation or a purchase situation, they all have the same concerns. When your unit faces the afternoon sun, the performance of the glass is very important.

I'm going to address one more thing. Triple-glazed glass is not used -- we don't --

We haven't seen any projects use a triple glazing system for residential tower glass. I know that was noted in Douglas' report, but to my knowledge, there is not any triple-glazed residential glass in all of Honolulu. And in our experience, we have not used any triple-glazed glass. And I'm not sure if that's a new product, but I did see that in the Douglas report. So I just wanted to make sure that from our perspective, it's something that we're not familiar with or it it wasn't one of the options that we were presented.

Q One thing I was referring to on the

mainland, they deal with changes of seasons.

A Yes.

Q And, obviously, they don't have summer like we do all year round.

A Right.

Q So the standards here by --

If you impose a higher VLT, you're going to end up --

A Year round.

Q -- having a much -- much more difficult time keeping the environment in the apartment comfortable.

A Correct. Correct. It's much more of an issue.

Q On the mainland, you're dealing with wintertime; you're dealing with summertime --

A Correct.

Q -- whatever, and, obviously, they have different issues, but they don't have to deal with the --

A Year-round sun.

Q -- heat gain year round.

A Yes. I would say that's true to our knowledge. You know, we're not -- like I said, we're not experts in that regard either.

Q So this rule would apply more to the mainland than it would to here?

A Yeah. I don't know how to answer that. I'm not qualified to answer that, but I would say that for Hawaii, it's something that is for sure an issue. Sorry. I can't answer that.

Q That's okay.

CHAIR WHALEN: So, Mr. MacKinnon, do you want --

Let's see. I think we already --

Did I ask staff if you'd like to ask Mr. Nishikawa any questions? Oh, I'm sorry. Scott?

EXAMINATION

BY MEMBER KAMI:

Q Mr. Nishikawa, I thought I heard you say that the consultant concluded that there was no conflict between the rules?

A Oh, no, that there -- I think from all of our findings, that there is a conflict in the rule. So --

Q I'm sorry.

And from the staff side, you believe that there is no conflict?

MR. NEUPANE: Correct. Douglas

Engineering consultant's report clearly indicates that there is no conflict in the rule. They have made certain recommendations saying that, look, even though there is no conflict in the rule, there are certain other consequences of higher VLT. So the Authority may want to look at revising VLT. They are not recommending revising because there is a conflict. Their analysis clearly indicates that there is no conflict in the rule.

MEMBER KAMI: Thank you.

CHAIR WHALEN: Yeah, and I think we'll hear from the staff in their presentation too. So we can direct those questions at that time to staff.

Any other questions of Mr. Nishikawa first?

Staff, do you have any questions of Mr. Nishikawa?

ACTING EXECUTIVE DIRECTOR: No questions.

CHAIR WHALEN: Okay. Thank you.

Mr. MacKinnon, would you like to summarize before you close your argument?

MR. MacKINNON: Yeah, I guess the question we would ask if I have an opportunity to comment after the staff, or is this where I get to

do it?

CHAIR WHALEN: Give it your best shot. You've seen the documents.

MR. MacKINNON: Yeah.

CHAIR WHALEN: Okay.

MR. MacKINNON: Contrary to the Douglas Engineering report, our feeling is there is a conflict in the rule, and the conflict in the rule is that the rule as written, if you try to basically comply with both, the end result is that you're requiring the development community to build less efficient buildings in Honolulu.

The conclusion of the Douglas Engineering report, which showed a higher energy savings for the Symphony building, and as a result of going up to .7 percent, which is a significant increase in energy savings, but still would not get you anywhere near the next LEED's level --

We're still talking about the minimum LEED level.

-- showed that they had some glass types at 50 percent VLT with a solar heat gain coefficient from 22 to 28 -- .22 to 28, which is significantly more than .9 and -- .19. And what it showed was that it just made the 10 percent, but it

also demonstrated that that much more efficient building, Symphony, was at 13 percent, but the rule would not allow you to build it that way as it's currently done. And to us, that's a clear conflict between the goals of the "Green Building" section and the VLT rule because one rule says there are possible ways to build a building that complies with both, but it's not the most sustainable and energy efficient building that the architectural and engineering community in Honolulu could actually build.

The rule is constraining the ability of the development and engineering community in Honolulu to design more sustainable and energy efficient buildings if the VLT rule remains unchanged. And as a consequence of that, we believe that there is a conflict that the VLT rule should be waived or permanently suspended as to Symphony and allow Symphony to proceed with building a much more sustainable and energy efficient building than could be built with so-called compliant glass.

I guess in conclusion what we'd say is our view, you know, given the state energy code requirements, the public's concern increasingly

with increased energy and savings, sustainability and design, that any rule that hinders or impairs the creativity and ingenuity of the architectural and engineering community to achieve those goals to a greater level is a flawed rule that should not be, you know, used for purposes of, you know, impinging upon the developer's ability to build more sustainable and energy efficient buildings.

The other point that we'd -- that I'd like to make, which was alluded to by Keith Chan in his discussion, is that you need to keep in mind that this is all hypothetical modeling that's done of energy efficiency and things, and there are and will be variances that occur in the engineering minds of different engineers who go through this process. And so the fact that there are some differences to me is, hey, that's going to happen because we're talking about hypothetical, it is not an absolute way to do any of this modeling, and that both parties, from what we're aware of, used appropriate systems. They came up with different results. But the idea that what you're doing is you're hanging your hat, so to speak, on the fact that one engineer came up with a modeling system that said, "Well, you can just make it," and

another one who says, "Well, you really don't," seems to me that's another instance of indicating there's a flaw in the relationship between those two rules if what you're depending upon is what engineers, you know, employing a hypothetical modeling system to arrive at estimated projected savings, if that's the results you're going to come up with, and it's going to vary depending on, you know, which particular hypothetical model or engineering decisions were made and the assumptions and factors that go into it.

So we, basically, would conclude once again that we feel that there is a conflict between the rules; that it would be appropriate for the Authority to waive or permanently suspend the Glass Rule as it relates to the Symphony project and allow the project to proceed with the glass that has been selected. Thank you.

CHAIR WHALEN: Thank you, Mr. MacKinnon and your witnesses.

Yeah, let's take about a five-minute break before we ask staff to make their presentation.

(Recess taken from 10:19 a.m. until 10:31 a.m.)

CHAIR WHALEN: So we're resuming at 10:31 a.m. Our next -- next we'll have the presentation by staff or appearance by staff.

I understand that Deepak Neupane will be presenting the staff's report. Are there any exhibits the staff intends to admit to the record?

MR. NEUPANE: Yes, Chair. The consultant's report on the staff report is the exhibit. And then I believe we passed out the consultant's resume to our expert witness.

CHAIR WHALEN: So those exhibits, I believe, are underneath the lavender divider for staff. And is that complete or is there anything in the tabs that's not included?

MR. NEUPANE: It is complete except for the resume that was provided this morning.

CHAIR WHALEN: Yeah, there was a resume, right. Patrick Yen from Douglas Engineering will appear as a witness?

MR. NEUPANE: Douglas Engineering, yeah.

CHAIR WHALEN: Okay. Does the Applicant have any objections regarding the staff's proposed exhibits?

MR. MacKINNON: No, we don't.

CHAIR WHALEN: Thank you. Being no

objection, staff's exhibits are admitted to the record.

(HCDA Exhibit A is admitted.)

CHAIR WHALEN: You mentioned Patrick Yen as or the resume for Patrick Yen. He will be a witness. Are there any other expert witnesses?

MR. NEUPANE: No. Patrick would be the only one.

CHAIR WHALEN: Okay. Does the Applicant have any objections to Patrick Yen as an expert witness?

MR. MacKINNON: No, we do not.

CHAIR WHALEN: So being no objection, he'll be designated as an expert witness. He will be --

So we will proceed with -- by calling up Patrick Yen, or would the staff prefer to --

MR. NEUPANE: Staff report first.

CHAIR WHALEN: -- start with your report? Okay. Thank you.

MR. NEUPANE: Thank you, Chair Whalen. Staff report is in your packet. The initial portion is background, and it basically deals with the chronology of events. So unless the members have specific questions on that, I'm going to just

not read through everything and really go into the discussion part of the staff report.

The claim had been made that there is inherent conflict in Mauka Area Rule provision between what is called the Glass Rule and then the LEED rule. Because of that, I mean, staff doesn't have the capability internally to analyze and perform -- do energy modeling and all. We hired a consultant from outside who had the expertise to do the energy model. The consultant is an electrical and mechanical engineer with expertise in LEED. They reviewed all the pertinent rules and prepared several building energy modeling.

The design for Symphony Honolulu was used to model the energy for the building itself. The pertinent data was provided by Symphony Honolulu's consultants, Notkin Hawaii.

The report is in your packet. Apart from the calculation, it's not very thick. It's only about 13 pages. I'll just basically summarize it.

The results from the consultant's report indicates that there is no inherent conflict in the Mauka Area Rules. You could design any building, including an all-glass tower, and still meet the Glass Rule and the LEED rule independently.

Over and beyond the modeling, the consultant had some observations regarding VLT. And as was presented by the petitioner's witnesses, some of the witnesses, that is there a limitation in the rule in designing some things, a building that's a lot more energy efficient than what is required by the rule? And the answer to that would be yes. But the way we look at it is that the requirement in the rule is a minimum requirement that the Applicant has to meet. If the Applicant wishes to design a building that's much more energy efficient, then that's a choice. That's not a requirement.

That said, the consultant -- one of the conclusions or one of the recommendations that the consultant is proposing is that, yes, it is true that higher VLT means higher energy load, meaning that higher energy costs. So lowering the VLT would obviously lower the heat gain into the building and would reduce the energy load in the building.

I believe the question came from Member Scott that what was the thinking behind regulating VLT in the first place. So back in 2007 and 2011 when the staff was going through the Mauka Area

Rule amendment process, we looked at many of the elements, and I think one of the elements was look at the buildings, not only from the architectural side, but from the reflection the building creates on the street level and to surrounding buildings as well as the heat island effect that it creates. And if you walk around Kaka'ako, you'll notice that certain buildings have a lot of glare and do create heat island effect. So we're trying to address some of those issues.

At the time the recommendation from HCDA's consultant, Torti Gallas, was that it probably would be better to regulate VLT because it means more light transmission, hence, less reflection and less external reflectivity and heat island effect.

There was no hypothetical modeling done in the building in terms of energy analysis and all at that time because it's kind of difficult. If you analyze one building, then the question will be, well, how many different types of buildings are you going to analyze? I am not aware of any real modeling in terms of heat island effect and external reflectivity that you could accurately model and come up with some reasonable answers.

So at that time, HCDA staff just took the consultant's recommendation that 50 percent VLT is reasonable, can be made, and, excuse me, it will address the external reflectivity, heat island as well as the dark look of buildings.

One thing I would note is that since we hired Douglas Engineering and got into the analysis of it, one of the things that we realized at staff level, reviewing data for all glazing, was that VLT does not necessarily correlate with external reflectivity. And I think the terminology I used in the staff report was inverse correlation, meaning that if the VLT is high, then you would think that external reflection would be low because it's an inverse relationship, but that is not entirely true. If you look at the glazing data, then it shows that you can have a product that has a very low VLT, but has low reflectivity too.

Normally, you'd think that, well, if, you know, less light is going in, more light is being reflected out. That is not true looking at the product. And based on this and, obviously, you know, if you have the clearer the glass is, the more of the interior is visible. So higher VLT means that, you know, you can see things typically

during daylight. I mean, nighttime when the interior is lit, you can see the interior with even very low VLT glass, but during daytime as the VLT increases, you can see more of the inside.

And the consultants, Douglas Engineering, is saying that if sustainability and energy efficiency is really important, then we may want to take a look at, you know, reviewing the VLT and coming up with a parameter that balances energy savings with the other elements that we are trying to achieve like, you know, look up the building. We don't want all the buildings to have the same dark look, what I sometimes call the Darth Vader look, or more so the heat island effect and external reflection -- reflectivity. So that's, basically, the recommendation from them.

So that concludes my report, and I can answer questions or we have the expert witness here.

CHAIR WHALEN: Yes, Tom?

MEMBER MCLAUGHLIN: Deepak, a couple questions. I'm still not sure what the public purpose or general benefit of a high VLT/low VLT are necessarily in a residential tower, but the issue of reflectivity certainly is one of concern

to folks.

My first question is what is the reflectivity of this? Is there a standard of reflectivity, and how does this building compare with other buildings in respect of reflectivity?

MR. NEUPANE: I can answer that by, you know, providing you some information on the rules. And Chapter 22, which is the rule that preceded the new Mauka Area Rules, provides for external reflectance of about 30 percent. So all of the buildings that are in Kaka'ako have reflectance of -- are supposed to have reflectance of less than 30 percent. Now, we haven't independently verified it. So I can't say that they have.

Symphony, if I remember correctly, the data that was provided to us by the Applicant has an external reflectance of 48 percent. So it's considerably higher. And here is a product that has a low VLT, but high reflectance.

CHAIR WHALEN: I have some questions, first about the origin of this 50 percent VLT. What concerns me is that Torti Gallas, who was the consultant to HCDA at the time, recommended having some kind of VLT, or did that request actually come from staff or --

MR. NEUPANE: My recollection is that the consultant did recommend VLT. Yeah, contrary to the letter that the consult -- Torti Gallas has provided to Symphony, my recollection at the time when we were going through the rule making process was that -- and I think the decision came instead of regulating external reflectance as we were doing in Chapter 22, to regulate VLT because it not only regulates the reflectance, but it regulates the transparency of the building.

CHAIR WHALEN: Right.

MR. NEUPANE: Now, I know that we had very clear discussion at the ground level --

CHAIR WHALEN: Right.

MR. NEUPANE: -- you know, having that 70 percent VLT. So it's -- and that's really related to pedestrian environment and all of the other stuff.

CHAIR WHALEN: Right. Do you recall whether they recommended the 50 percent standard or was that something that --

MR. NEUPANE: It was Torti Gallas that recommended the 50 percent.

CHAIR WHALEN: I see. Well, they backed away from it.

MR. NEUPANE: They have. I have to talk to Neil Payton.

CHAIR WHALEN: I'm wondering, you know, because it's a firm that works in lots of cities, and I was in Vancouver about two months ago, two and a half months ago. It's a city that's under cloud cover much of the year. It's a colder climate, and I could see where visible light transmission might be a concern there because you can actually see right into the apartment units in Vancouver. They have a lot of high-rises there.

So I'm wondering if they are -- had recommended a standard that they have applied elsewhere and not necessarily specific to Honolulu. I mean, I'm just wondering if -- if this is something --

MR. NEUPANE: Could be possible. I mean, from staff's side, at that time we didn't question that. When they said 50 percent, I don't think we said that, "Well, we looked at -- well, this is Hawaii. Would 50 percent be lower or higher," or that kind of thing. I think we were focused more on --

CHAIR WHALEN: Right.

MR. NEUPANE: -- the heat island effect

and then reflectance. And, obviously, to some extent, the look of the buildings that --

A lot of the buildings in Kaka'ako are very reflective. So having a higher VLT in our opinion would help with that that the building would not be as reflective and dark looking.

CHAIR WHALEN: Okay. Well, I'll probably be asking your expert witness about, you know, the reflectivity standard, whether, you know, we should be concentrating on that rather than VLTs as a standards.

MR. NEUPANE: I did talk to a glass representative actually from Viracon, and after probably close to an hour conversation on different parameters, it gets convoluted.

CHAIR WHALEN: I bet it does. Speaking of convoluted, I mean, having administered codes and written codes in the past, a couple of things I learned from sometimes tough experience is that when you're adopting a new rule, it's really important to understand how you are going to enforce it. You know, especially if it's something that's not applied to other buildings outside of Kaka'ako and this is something brand new. So it seems to me, you know, hearing sort of permit

history, that some things kind of slipped through the cracks; in other words, you know, that there was no real check on, you know -- checkoff from HCDA on whether the glass met the standard. I believe the witness or the Applicant testified that they disclosed that to HCDA. Is that true or is that how you understand?

MR. NEUPANE: Let me go into the sequence of events there in terms of permitting. At the development permit stage, the information that's provided on the development permit application is not at a level where we know what kind of product is being used in the building. Not just the glazing. You know, it's other stuff.

CHAIR WHALEN: Right. Certainly.

MR. NEUPANE: And because of that reason and the permit, there is specific language that says that the Applicant shall comply with the provisions of this subchapter. We were trying to cover that.

Typically, even at the building permit level, if you look at a building permit set, that information like glazing is not provided. On this case, it was discovered rather anecdotally because I had a meeting with another consultant on a

separate project, and going over the project and looking at the requirements, I made the architect aware -- I told them, "Remember, there is a Glass Rule, and you have to make sure that the VLT rule is met." And the architect, you know, mentioned, "That building going up on the corner of Ward and Kapiolani looks awfully reflective. Do you think that that meets the VLT requirement?" And I was like, "Well, we haven't verified." So staff planner then at that point contacted Symphony team and then requested that they submit the VLT data.

CHAIR WHALEN: Okay. All right. So in other words, it was embedded in the original permit --

MR. NEUPANE: Yeah.

CHAIR WHALEN: -- that they had to meet this VLT --

MR. NEUPANE: They had to meet the requirement.

CHAIR WHALEN: -- requirement? So they had to demonstrate that they did meet it?

MR. NEUPANE: Yes.

CHAIR WHALEN: Okay. If the Authority does pursue something that -- you know, a rule change that would better or more specifically

address the reflectivity standard, is that something that's inherent in the glazing that's used or --

Because I didn't see anything. Well, I'll ask the witness about, you know, what their recommendation, I guess, would be in terms of to address the heat island effect -- external heat island effect from reflectivity and glare and those kinds of things.

MR. NEUPANE: There are certain sections of LEED that tries to address that, and, you know, like daylighting in a building and environmental impact of a building in terms of heat island and all of those. So we are thinking of looking at various parameters, and right now I'm not sure if -- I couldn't say that, well, external reflectance is the parameter to regulate. So we have to do more research to figure out, you know, what would be the best parameter, and it may be not just one parameter. It may be a set of parameters that could be regulated.

CHAIR WHALEN: Okay. Thank you. Any other questions from the Board? Yes, Beau?

MEMBER BASSETT: So just to be clear, there are no longer, as far as this development is

concerned, any rule specific to the reflection of the window or the reflectivity reflectance?

MR. NEUPANE: That is correct. There are no rules regulating reflectivity.

MEMBER BASSETT: That was changed out with this measure of VLT?

MR. NEUPANE: Correct.

MEMBER BASSETT: But the intent of you're saying imposing the VLT, part of the intent was to monitor and regulate reflectance?

MR. NEUPANE: Yes.

VICE CHAIR SCOTT: And you also said you found out that there's no correlation between -- no direct correlation in some products having a higher VLT and not being as reflective?

MR. NEUPANE: That is correct. Yes.

VICE CHAIR SCOTT: Okay.

MEMBER BASSETT: I have a question. Were you able to find out if there were any other public policies that supported having a high VLT besides the decrease in reflectivity?

MR. NEUPANE: In terms of energy code, we did talk to DBEDT energy office and looked at the parameters that, you know, the state energy office would be regulating, and solar heat gain

coefficient is the parameter that really directly correlates to energy efficiency. So the state energy code does regulate solar heat gain coefficient. And if I remember correctly, I believe that number is .25.

CHAIR WHALEN: Yes?

MEMBER OH: Deepak, just continuing on with Beau's and also Steven's comments, which leads me to pretty much the intent of the VLT. We have the fact that a higher VLT does not necessarily mean a lower glare or reflectivity, which the second purpose was to restrict -- well, to regulate the views in and out of the building. But I'm sure that as a resident in a resident building, we don't want necessarily to be able to look at the residents or vice versa, which also -- which I guess leads us to the heat island effect which pretty much leads us --

Can you kind of explain what that heat island effect is? I live right diagonally at 909 Kapiolani Boulevard to this project. Maybe if you can kind of explain what that heat island effect is.

MR. NEUPANE: Heat island effect is if you have a reflective glass that reflects sunlight

into the surrounding environment. So the reflected sunlight, excuse me, will hit a building or, you know, streets and sidewalks and all and raises the temperature of the --

MEMBER OH: Sure.

MR. NEUPANE: -- sidewalk. So that's basically heat island effect.

MEMBER OH: What is the approximate radius or what area will that affect, do you think?

MR. NEUPANE: Difficult to say because it depends on, you know, the time of the year because it depends on the angle of the sun and the orientation of the building and how the sunlight, you know, gets reflected. So --

MEMBER OH: Okay. Thank you, Deepak.

CHAIR WHALEN: Okay. Any other questions?

So we can call your witness, Patrick Yen.

Patrick, would you raise your right hand and swear or affirm that you will be the truth?

MR. YEN: I swear to tell the truth.

PATRICK YEN,

called as a witness by the Petitioner, was sworn/affirmed to tell the truth and testified as follows:

EXAMINATION

BY CHAIR WHALEN:

Q Thank you.

So you submitted this report. You did the analysis. Do you want to just summarize what your finding was? I believe Deepak already has somewhat, but if you have anything to add to that.

A Well, basically, in our energy analysis as mentioned by the other side, when we ran our analysis, we came up with an energy saving of 13 percent over the baseline, and we also ran an analysis on other types of glass within the range of .22 to about .27 to show that you can still meet the LEED baseline requirement of 10 percent or more with any glass with a VLT of 50 percent or more. That was based on our findings and our calculations.

Q Anything else to add?

A No.

Q If the other board members don't have a question at the moment, I have one.

There had been some discussion, I think, that the VLT requirement -- I guess the intent was to reduce the heat island effect or reflectivity?

A Uh-huh.

Q And in your report, you mentioned that high VLT does not necessarily address, you know, the reflectivity or the heat island effect?

A Correct.

Q There also is no real standard in LEED for -- apparently, from your report, in terms of VLT; right? It's all pretty much energy coefficients?

A Right. I mean, as Keith Chan mentioned before, the main parameters for the energy model are the heat loads, which is SHGC, and also the LEED factor of the glass.

Q So reflectivity contributes, I guess, to heat, but indirectly or at least to the extent that it's -- you know, that reflection is cast on other buildings, you know, that might contribute to their solar heat gain --

A Right, yeah.

Q -- inside the units unless they have solar glass?

A (Witness nods.)

Q Is there a standard for reflectivity that can actually be -- that's enforceable, I mean, that's clearly enforceable that you're aware of that can address that issue?

A From what I understand, at least in Hawaii, there doesn't appear to be any standard for limiting or setting any reflectance of the glass or any requirements for that nature.

Q Right. But if the HCDA did wish to have such a standard, where would we turn to seek some guidance? Because, apparently, the VLT standard didn't really address that public concern directly. It just --

A Well, there would be need to be a team to do a study on the glass, because, again, VLT reflectance, solar heat gain coefficient all needs to be taken into account if you're going to set some rules on what type of glazing you can use or what not to use on a building.

Q Okay. So in other words, it's not something that you can just set a standard for -- simply set a standard for and --

A No, I don't think so.

Q -- administer very easily?

A Everything needs to be looked at, I think.

Q Right. And different surfaces of the building might have different issues related to reflectivity?

A Right.

Q Different faces of the building.

Okay. Are there any other questions? Yes, Steve?

EXAMINATION

BY VICE CHAIR SCOTT:

Q You noted here that the Symphony project has an energy efficiency of 13 percent over the baseline?

A Correct.

Q And then the VLT, you said from 51 to 58 percent, had an efficiency 10.3 to 10.7. Do you know or can you tell me if the project itself is either 2.3 or 2.7 percent more efficient, what does that correlate in terms of energy savings and as far as what the project is going to consume because, obviously, this gets back to air conditioning?

A Right. I mean, as mentioned before, this model is hypothetical, but in our calculations, we show that --

Q We live in a hypothetical world --

A Right.

Q -- unfortunately.

A For instance, in this model, we show that

a 1 percent difference in energy savings equates to about $33,000 a year.

Q So, obviously, almost two and a half percent would be 70, $80,000 --

A About there, yeah.

Q -- savings-per-year energy?

A Annual, yeah.

Q And since we're a state going to 100 percent recyclable by 2045, that would equate to a lot of energy.

EXAMINATION

BY CHAIR WHALEN:

Q I have another question. I think because if there is a waiver being considered, rather than apply it to a single project, I am thinking that -- what you're saying is something that could apply more generally; right? I mean, if there is maybe an imperfect assumption that the VLT standard would address the issue of reflectivity, that applies not just to the Symphony project, but any project that will be built in Kaka'ako, any tower? In other words, the same issue would come up for every building that is developed under these 2011 rules as they currently stand?

A Potentially, yes, because, you know, all

buildings aren't going to be designed or constructed the same.

Q Right.

A It's mentioned in our report that all glass buildings are primarily the ones that are going to be most likely coming for the waiver of this rule. You can have a building with mostly concrete walls and maybe not even have an issue with the rule itself. So it really depends on the building design as well.

CHAIR WHALEN: Okay. Well, maybe then I direct this to staff. Is there -- because I know there's been discussion about in terms of tower design, whether other features like passive solar shading and other kinds of things would be a way to address a little bit of the reflectivity issue?

MR. NEUPANE: Yeah. I mean, it could and it could address the LEED issue too because providing shading, it will decrease the solar heat gain too.

In terms of buildings, for example, if it wasn't a completely glass tower building, then it would be a lot easier to meet the VLT requirement as well as the energy requirement.

CHAIR WHALEN: Okay. Any other questions

of the witness? Yes, Beau?

EXAMINATION

BY MEMBER BASSETT:

Q We heard testimony earlier about how -- well, this chart here, and they were talking about how this SHGC of .19 versus SHGC of .22, and that it would be possible to regain some LEED points by doing other things in the building to make up for it. Do you agree with that?

A Yeah.

Q And we heard some examples about air conditioning, lighting, photovoltaic. Are there any other things that you could add to that list as far as things that could be done to gain LEED points?

A To gain other like energy efficiency points, you know, added insulations in the walls or the rooftop. You mentioned lighting. You know, your plug-in loads, you can reduce that. Your hot water equipment.

Q Okay. Next question. Are there any standards -- LEED standards that consider the reflectivity of a building? Is that a factor that LEED cares about?

A Same with -- well, the VLT, you can find

that in the credit for daylighting. I don't think reflectivity is addressed in that particular credit.

Q So when you say daylighting, daylighting to me sounds like the amount of light that comes through into the unit during the day.

A Correct.

Q Which is, according to LEED, I would think a plus because you're not using indoor electricity to light your building --

A Correct

Q -- your interior. So in that sense, VLT could be a plus for LEED standards? I mean, I'm sorry, not VLT, but higher VLT.

A It's gonna be a balance because the energy efficiency portion of LEED is a real big factor in obtaining higher LEED certifications like silver, gold and platinum; whereas, the daylighting section, I believe, is not as big as the energy efficiency part.

Q Previous testimony stated some kind of happy balance, this nice range where ultimate VLT. Do you have any range that you would say is an ideal VLT range?

A From what I've read, a lot -- like kind

of like an industry standard, you could say is a range between maybe 20 and up to 40 percent.

Q And do you agree that that range there would give you the benefit of some of the daylight points and also some of the decrease in the SHGC?

A Decrease in the SHGC for sure. The daylighting part is a little bit more tricky because it depends on the window geometry and if you have shading or overhangs that might affect the way the sun is coming into the space and whatnot and also the orientation of the buildings.

Q So in your opinion, it sounds like a lot of this has to do with the design of the building?

A Correct.

Q So that there are things like geometry, external shadings that could be implemented that would increase the LEED points in your building?

A Uh-huh.

Q But that a glass building like this has some inherent flaws because it doesn't include any of those design features?

A Well, it doesn't include those design features to say, but the daylighting credit can still be met and the energy efficiency -- well, at least a prerequisite can be met without any of

these features. It's just you gotta take a close look at the design overall.

Q So I guess it sounds like these LEED standards have to do with the building itself. Are there considerations in LEED having to do with the effect of a building on the external environment rather than just inside the building? Because, I mean, the lack of any consideration for reflectivity to me seems a little bit unusual. Because you could have a glass that's very reflective, which would be a maximum benefit for the LEED certification, but horrible for the community.

A Yeah, I'm not -- I'm not too familiar with if there's like a LEED section dealing with the external environment for reflectivity from a building.

Q Well, are there other things, like other factors that are in LEED that does consider, I mean, the effect of the building on the outside?

A Not that I'm aware of other than like rain runoff and drainage and other parameters like that, which has to deal with more mechanical systems rather than the shell of the building itself.

Q Thank you.

EXAMINATION

BY MEMBER MCLAUGHLIN:

Q Patrick, looking at the statistics and all these fairly narrow differences in margins between them, and you were saying that these numbers come about in comparison to a hypothetical model against which different engineers can come up with different assumptions.

A Uh-huh.

Q Great minds can come up with different ideas on here, and at the end of the day, each reflects basically a single person or group's opinion on a variety of inputs, a lot of inputs that go into here. I guess my question is what is the margin of error throughout all of that modeling? Are we, in effect, talking about something that there is no real measurable difference when you're talking between two and three-tenths of a percent difference? Could you just change the model to achieve that? How much can the model be off between the different opinions of people?

A I don't think it will be off too greatly because in most cases, if you're to design a

building, the building shell is more or less set, and then you have to kind of play around with like the mechanical systems, like different air conditioning types, other water heating types, lighting, lighting usage and whatnot, but the overall in the end, the air conditioning system is greatly affected by the building shell which is going to be one of the more static parameters, I should say. So if you have the same building and you try to fit different air conditioning systems in there, the style of the air conditioning systems will more or less be the same. The efficiencies might be a little bit different which will get you maybe a different percentage in the energy savings overall, but there are many different factors that aren't limited to the building shell.

Q So then it comes back to the design that's actually driving it?

A Yeah. It's a huge collaborative effort, you know, between the architect and the engineers to do it.

CHAIR WHALEN: Any other questions? Yes, Mary Pat.

MEMBER WATERHOUSE: I think this question is more for Deepak.

Could we come up with a revised rule that looks at both the -- what is it -- the VLT as well as the reflect -- reflection?

MR. NEUPANE: Yeah, I think we can. That's why I said earlier that it may not be just one parameter that's regulated, but a number of parameters, including VLT and reflectance, and there are some other -- and solar heat gain coefficient and all of that.

MEMBER WATERHOUSE: Okay.

CHAIR WHALEN: Any other questions?

EXAMINATION

BY MEMBER BASSETT:

Q I guess I have one last question of this witness.

You talked about something called the heat -- was it heat island --

A Heat island effect.

Q Heat island effect. Is there -- what is the standard to measure the heat island effect?

A I don't believe there is a standard to measure, you know, the effect of one building to the next other than doing, you know, energy analysis on the building overall or between buildings for that matter. But, yeah, I don't

believe there is a standard for the heat island effect.

Q Thank you.

CHAIR WHALEN: Are there any other questions for the Board before we ask the Applicant if they have questions of this witness?

Mr. MacKinnon, do you have any questions of this witness?

MR. MacKINNON: No, we don't.

CHAIR WHALEN: You don't.

Okay. I note since the publication of the hearing notice appeared in the Honolulu Star-Advertiser on June 20th, 2015, written testimonies have been received, but we'll now receive public testimony orally. Speakers -- there's only one speaker who is signed up. So he will be called first. And we ask if you could limit it to three minutes, but, you know, if you have something important you need to finish, please do that.

So the speaker who signed up is John Kobelansky, Jr. Thank you.

MR. KOBELANSKY: Good morning, everybody. Or is it? Yeah, still morning. John Kobelansky, Jr. I'm a concerned area resident of Kaka'ako.

A man parked his car in downtown London --

I think it was on Sirfrench (sic) Street. -- in 2013 -- September 2013. He left his car to run his business. He was parked right across a skyscraper that had mirrored glass. He came back an hour later and parts of his car were melted. This is a documented fact. The owner of the building compensated him for that destruction to his vehicle. He parked a Jaguar there, 2013.

So what happened was the mirror melted and also part of the rear panel on the outside exterior of the car. When he opened the door to the car, he smelt burning plastic inside the car. Since then that area has been off limits at certain times of the year because of reflectivity of the sun. One man, one car, one building. You take that equation and you apply it here in Hawaii, many buildings, much reflectivity, many cars. Imagine if we can exaggerate that by saying you left your dog in the car with the windows rolled down slightly, what will be the effect and impact of that?

Okay. Keeping that in mind, I want to make three points today. First point is about the

Mauka Area Rules. The purpose of the Mauka Area Rules is to establish and implement smart growth principles. Okay? And I believe we're all talking about the same thing today. The rules are adopted to protect and promote public safety, health,, general welfare of the community, protect and preserve places and areas of historical, cultural, architectural or environmental importance and significance, which to me is all of Hawaii nei, everything.

Point No. 2, well, this is in regards to that document 15-217-55(k)(2) that says in no uncertain terms, "highly reflective mirrored and opaque window glazing are prohibited." That's the line that we're using here very clearly spelled out in the Mauka Area Rules.

Now, to me, if this is -- if a waiver is being asked against the rule, then that means it's in contention and it's in violation of the rule. Otherwise, why ask for a waiver? That's clearly spelled out in the rule.

Point No. 2, and this comes to me from a dear friend, and I think we can all relate to somebody who is Hawaiian at heart, which is all of us in here. "We, as Hawaiians --" and I'm

paraphrasing him. "We, as Hawaiians, are stewards of the land, are embarking on a journey that is exciting and may also be ending in the worst environmental disaster once we pass the critical point. The path we are treading does not seem to be what our kupunas have anticipated or approved. We are damaging the fragile aina ecosystem in multiple ways. We must, therefore, be deliberate and look into making the system sustainable before all precious things are auctioned off to the highest bidder. We must be careful to examine the effects of such defilements of this fragile and pristine environment. We must not not allow such reflective materials to be used, let alone in the densely populated and scenic public beaches of Honolulu, but, also, anywhere where there are other patrons to think of. We should forbid activities that pollute the scenery for all residents and visitors alike."

This one paragraph comes to me by virtue of a friend who is a civil engineer in the planning branch of State of Hawaii. This is an engineer's thoughts. It's also my thoughts too.

Point No. 3, will this granting of a waiver set a precedent for all future high-rise

constructions in Honolulu? If we allow one construction project to use mirrored glass, will others also request similar treatments to their buildings? Will other exceptions to the rules be allowed since building or buildings have already been built and nobody had inspected it in the first place? That's point No. 3.

In conclusion, Hawaii is just not Hawaii without the pristine aina. Let's make and keep Kaka'ako and Hawaii the special place that it is.

Ua mau ke ea O ka aina I ka pono. The life of the land is perpetuated in righteousness. Mahalo a nui.

CHAIR WHALEN: Thank you. Do the Board members have any questions of the witness?

MEMBER BASSETT: I have a question. Thank you for your testimony.

MR. KOBELANSKY: You're welcome.

MEMBER BASSETT: I have a question. Just you spoke a lot about the effect of a building on the environment.

MR. KOBELANSKY: Right.

MEMBER BASSETT: And in my opinion, I think that a reflective building that reflects the sky, that reflects trees is better to me visually,

less pollution than a structure that is a concrete tower that's just standing there. I would rather see the sky than I would see --

MR. KOBELANSKY: Yes.

MEMBER BASSETT: So that's the thing that I'm confused because it seems that a reflective surface that shows us more of our natural environment is more of a plus when it comes to the effect on our environment. I totally get the negative impact of the light beams and the effect on cars, but as far as aesthetics goes, is it your opinion that mirrored reflective buildings are an eyesore to our community?

MR. KOBELANSKY: Well, my opinion is we shouldn't block the view planes with a building, period. Then there would be no issue about glass, concrete, steel. Why are we doing this? To make a lot of money, you need building up.

MEMBER BASSETT: Why are we building up?

MR. KOBELANSKY: Right.

MEMBER BASSETT: So your concern would have less to do with the reflectivity or the facade of the building, but more about the height of the building and how high we're going?

MR. KOBELANSKY: Yes. And that was an

issue. Under Abercrombie administration, he proposed 645-feet height limits. We met and we haggled over these issues with HCDA many times. So they brought it down to 418 feet. So, yes, that is an important issue, but I think more importantly, we have so many glass towers now that when I go for a swim in Ala Moana, I'm inundated with light rays from everywhere. And it is great, but it's not great to have sun in your eyes. And if you're driving and that happens to you while you're driving, I think that's -- that's very negative. And, actually, an accident can be caused by you just driving up the street and then getting blasted by light rays in the building.

Then you have other buildings of reflectivity that have mountains bouncing off of them, which is nice, but when that sun starts to come in, that's a negative factor. And because you live in Hawaii, guess what, almost 365 days a year, you're inundated with light rays, but that's a good thing, but now we're multiplying the effect of the light rays and concentrating it in small areas like Kaka'ako and parts of Waikiki, and we're going to see a building boom. We're right in the middle of one now where more buildings are going to come up,

and it's going to affect everybody.

So my concern is not so much one building, but the compound effect of many buildings in a small area, and I think that's what the Mauka Area Rules are trying to protect; otherwise, why have it?

MEMBER BASSETT: Thank you.

MR. KOBELANSKY: You're welcome.

CHAIR WHALEN: Any other questions to the witness?

Thank you, Mr. Kobelansky.

MR. KOBELANSKY: Thank you.

CHAIR WHALEN: Anyone who is not signed up wish to speak? Okay.

MR. KOBELANSKY: Can I speak on somebody else's behalf who is kind of shy? Is that okay? Is it okay? She's here, but she's shy.

MS. MORIKAWA: Mine is a written testimony.

CHAIR WHALEN: Oh, written testimony. Okay. Well, that's fine. We've received it. Thank you.

MEMBER BASSETT: Can we find out what her name is so I can make sure I find it?

CHAIR WHALEN: I'm sorry. You introduced

yourself to me earlier before the meeting. What is your name just so he --

MS. MORIKAWA: Clara.

CHAIR WHALEN: Clara. Okay.

MEMBER BASSETT: Thank you.

CHAIR WHALEN: Not completely shy. First name only.

Okay. Another hearing on this matter is scheduled for July 23rd, tomorrow, and decision-making is scheduled for August 5th, 2015. Both hearings will be held in this same venue. The proposed findings of fact, conclusions of law and decision and order are to be filed by July 29th, 2015.

On behalf of HCDA Authority members and staff, I thank you for your attendance. The time is now 11:25.

(Meeting adjourned at 11:25 a.m.)

C E R T I F I C A T E

STATE OF HAWAII)
) ss.
CITY AND COUNTY OF HONOLULU)

I, LAURA SAVO, a Certified Shorthand Reporter in and for the State of Hawaii, do hereby certify:

That the foregoing proceedings were taken down by me in machine shorthand at the time and place herein stated, and was thereafter reduced to typewriting under my supervision;

That the foregoing is a full, true and correct transcript of said proceedings;

I further certify that I am not of counsel or attorney for any of the parties to this case, nor in any way interested in the outcome hereof, and that I am not related to any of the parties hereto.

Dated this 23rd day of July, 2015, in Honolulu, Hawaii.

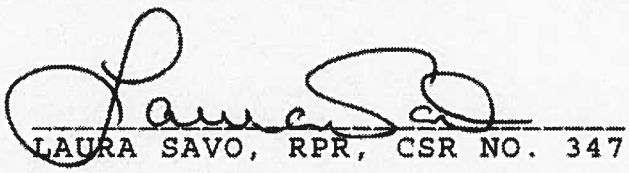

LAURA SAVO, RPR, CSR NO. 347

CITY AND COUNTY OF HONOLULU

BUILDING PERMIT

KAKAAKO WORKFORCE HOUSING PER

SUBCHAPTER 4 OF 2011 MAUKA PLAN AND RULES

801 SOUTH STREET
HONOLULU, HAWAII

FOR

DOWNTOWN CAPITAL LLC

APPROVED
DPP

JOB SITE COPY

DESIGN TEAM

ARCHITECT	KAZU YATO, AIA & ASSOCIATES, INC.
STRUCTURAL ENGINEER	BALDRIDGE & ASSOCIATES STRUCTURAL ENGINEERING, INC.
CIVIL ENGINEER	BILLS ENGINEERING INC.
MECHANICAL ENGINEER	MECHANICAL ENTERPRISES, INC.
ELECTRICAL ENGINEER	ECS, INC.
LANDSCAPE ARCHITECT	RANDAL FUJIMOTO

EXHIBIT 2

NOTE: Fire Alarm System approval applies to design and specifications as submitted. Installation and audibility subject to final inspection, testing & acceptance.

Plan Reviewer
Fire Chief Manuel P. Neves
9/4/13

APPROVED
DPP

CONSTRUCTION OR INSTALLATION APPROVED BY

Honolulu Fire Department
City and County of Honolulu

For: Manuel P. Neves
Fire Chief

9/4/13
Date

Plan Reviewer

Note: Approval applies to [illegible] as submitted and for construction [illegible] indicated thereon. Any [illegible] shall be submitted for approval [illegible] subject to final [illegible]

JOB SITE COPY

Hawaii Community Development Authority
Kakaako Community Development District

Approved as to the requirements of the Mauka and/or Makai area Plan and Rules

Date 8.6.13.
Authorized Signature

76194 4

A2012-11-1068 - 1070

HCDA

11/9/12
8.6.13

9/5/12

801 SOUTH STREET
TMK 2-1-047:003

731707
731711

KAKAAKO WORKFORCE HO
SUBCHAPTER 4 OF 2011 MAUKA PLAN AN
801 SOUTH STREET
HONOLULU, HAWAII

KAZU YATO, AIA & ASSOCIATES, INC.

KAKAAKO WORKFORCE HOUSING PER

SUBCHAPTER 4 OF 2011 MAUKA PLAN AND RULES

801 SOUTH STREET
HONOLULU, HAWAII

FOR

DOWNTOWN CAPITAL LLC

DESIGN TEAM

ARCHITECT	KAZU YATO, AIA & ASSOCIATES, INC.
STRUCTURAL ENGINEER	BALDRIDGE & ASSOCIATES STRUCTURAL ENGINEERING, INC.
CIVIL ENGINEER	BILLS ENGINEERING INC.
MECHANICAL ENGINEER	MECHANICAL ENTERPRISES, INC.
ELECTRICAL ENGINEER	ECS, INC.
LANDSCAPE ARCHITECT	RANDAL FUJIMOTO

NO. | DATE | REVISIONS

KAZUTOSHI YATO — LICENSED PROFESSIONAL ARCHITECT — No.3271 — HAWAII, U.S.A.
Expiration Date: 4/30/2014

THIS PROJECT WAS PREPARED BY ME OR UNDER MY SUPERVISION AND CONSTRUCTION OF THIS PROJECT WILL BE UNDER MY SUPERVISION.

KAKAAKO WORKFORCE HOUSING PER
SUBCHAPTER 4 OF 2011 MAUKA PLAN AND RULES
801 SOUTH STREET
HONOLULU, HAWAII
TITLE SHEET

KAZU YATO, AIA & ASSOCIATES, INC.
2033 RAINBOW TERRACE
HONOLULU, HI 96822
TEL: (808) 945-0040
FAX: (808) 945-0041

DATE NOV.7,2012 | DRAWN KY | CHECK KY | FILE

SHEET

T1.0

KAKAAKO WORKFORCE HOUSING

INDEX TO DRAWINGS

CIVIL

C-1	TITLE SHEET
C-2	GENERAL NOTES-1
C-3	GENERAL NOTES-2
C-4	GENERAL PLAN
C-5	GRADING PLAN
C-6	SITE PLAN
C-7	UTILITY PLAN
C-8	PROFILES
C-9	WATER LINE LAYOUTS
C-10	TRAFFIC CONTROL PLAN
C-11	MISCELLANEOUS DETAILS-1
C-12	MISCELLANEOUS DETAILS-2
C-13	EROSION CONTROL PLAN

LANDSCAPE

L-1	LANDSCAPE PLAN
L-2	PLANTING LIST AND DETAILS
L-3	IRRIGATION PLAN
L-4	IRRIGATION LEGEND AND DETAILS

ARCHITECTURAL

A0.0	SITE PLAN
A1.0	GROUND FLOOR PLAN
A1.0.1	PARTIAL 2ND FLOOR PLAN
A1.0.2	SECTIONS
A1.0.3	SECTIONS
A1.1	TYPICAL FLOOR PLAN – 2ND THRU 8TH FLOOR
A1.2	TYPICAL FLOOR PLAN – 9TH THRU 46TH FLOOR
A1.3	ROOF PLAN
A1.4	GARAGE GROUND LEVEL PLAN
A1.4.1	GARAGE 2ND LEVEL PLAN
A1.5	GARAGE TYPICAL LEVEL PLAN – 3RD TO 9TH LEVEL
A1.5.1	GARAGE 10TH LEVEL PLAN
A1.6	GARAGE 11TH LEVEL PLAN
A1.7	TOWER GROUND FLOOR REFLECTED CEILING OPLAN
A1.8	TOWER TYPICAL FLOOR REFLECTED CEILING PLAN
A1.9	GARAGE GROUND FLOOR REFLECTED CEILING PLAN
A2.0	GROUND FLOOR UNIT PLANS -106 & 108
A2.1	GROUND FLOOR UNIT PLAN-110
A2.2	GROUND FLOOR UNIT PLAN-113
A2.3	GROUND FLOOR UNIT PLAN-114
A2.4	2ND FLOOR UNIT PLANS-201 AND 203
A2.5	2ND FLOOR UNIT PLANS-202 AND 204
A2.6	2ND FLOOR UNIT PLANS-205 AND 207
A2.7	2ND FLOOR UNIT PLANS-206 AND 208
A2.8	2ND FLOOR UNIT PLANS-209 AND 211
A2.9	2ND FLOOR UNIT PLANS-210 AND 212
A2.10	2ND FLOOR UNIT PLAN-213
A2.11	2ND FLOOR UNIT PLAN-214
A2.12	9TH FLOOR UNIT PLANS-901 AND 903
A2.13	9TH FLOOR UNIT PLANS- 902 AND 904
A2.14	9TH FLOOR UNIT PLANS- 905 AND 907
A2.15	9TH FLOOR UNIT PLANS- 906 AND 908
A2.16	9TH FLOOR UNIT PLANS- 909 AND 911
A2.17	9TH FLOOR UNIT PLANS- 910 AND 912
A2.18	9TH FLOOR UNIT PLAN- 913
A2.19	9TH FLOOR UNIT PLAN- 914
A3.0	BUILDING SECTIONS
A3.2	GARAGE SECTION
A3.3	GARAGE SECTION
A4.0	TOWER EXTERIOR ELEVATIONS
A4.1	TOWER EXTERIOR ELEVATIONS
A4.2	GARAGE EXTERIOR ELEVATIONS
A4.3	GARAGE EXTERIOR ELEVATIONS
A4.4	GARAGE EXTERIOR ELEVATIONS
A4.5	GARAGE EXTERIOR ELEVATIONS
A5.0	KITCHEN ELEVATIONS
A5.1	KITCHEN AND BATH ELEVATIONS
A5.2	BATHROOM ELEVATIONS
A6.0	STAIR #3 AND ELEVATOR DETAILS
A6.0.1	STAIR #3 AND ELEVATOR DETAILS
A6.0.2	STAIR #4 DETAILS
A6.0.3	STAIR #1 DETAILS
A6.0.4	STAIR #2 DETAILS
A6.1	DOOR AND WINDOW SCHEDULES AND DETAILS
A6.1.1	WINDOW SCHEDULES AND DETAILS
A6.1.2	DOOR AND WINDOW DETAILS
A6.2	WALL AND PARTITION TYPES
A6.3	WALL AND PARTITION DETAILS
A6.4	LANAI DETAILS
A6.4.1	LANAI DETAILS

STRUCTURAL

S-0.1	GENERAL NOTES
S-0.2	GENERAL NOTES
S-0.3	GENREAL NOTES
S-0.4	REINFORCEMENT SPLICE AND BAR BENDS
S-1.0	TOWER DRILLED PIER PLAN
S-1.1	TOWER FOUNDATION PLAN
S-1.2	TOWER LOBBY FLOOR & ROOF FRAMING PLAN
S-1.3	TOWER 2ND FLOOR FRAMING PLAN
S-1.4	TOWER 3RD-8TH FLOOR FRAMING PLAN
S-1.5	TOWER 9TH FLOOR FRAMING PLAN
S-1.6	TOWER 10TH-15TH,20TH-29TH,&34TH-42ND FLOOR FRAMING PLAN
S-1.7	TOWER 16TH-19TH,30TH-33RD,&43RD-46TH FLOOR FRAMING PLAN
S-1.8	TOWER FOOR FRAMING PLAN
S-1.9	TOWER ELEVATOR MACHINE ROOM FRAMING PLAN
S-2.0	GARAGE GROUND LEVEL FOUNDATION PLAN
S-2.1	GARAGE 2ND LEVEL FRAMING PLAN
S-2.2	GARAGE TYPICAL LEVEL FRAMING PLAN
S-2.3	GARAGE 11TH LEVEL FRAMING PLAN
S-2.4	GARAGE ELEVATOR & STAIR ROOF FRAMING PLAN
S-3.0	TYPICAL FOUNDATION DETAILS
S-3.1	TYPICAL FOUNDATION DETAILS
S-3.2	FOUNDATION SECTIONS & DETAILS
S-3.3	GARAGE FOUNDATION SECTIONS & DETAILS
S-3.4	GARAGE FOUNDATION SECTIONS & DETAILS
S-3.5	ELEVATOR PIT SECTIONS & DETAILS
S-4.0	TOWER WALL DETAILS
S-4.1	TOWER WALL ELEVATIONS
S-4.2	TOWER WALL ELEVATIONS
S-4.3	TOWER WALL ELEVATIONS
S-4.4	TOWER WALL ELEVATIONS
S-5.0	TOWER SLAB & FRAMING DETAILS
S-5.1	TOWER SLAB & FRAMING DETAILS
S-6.0	GARAGE COLUMN SCHEDULE & DETAILS
S-6.1	GARAGE SHEAR WALL ELEVATION
S-6.2	GARAGE SHEAR WALL ELEVATION
S-6.3	GARAGE SHEAR WALL ELEVATION
S-6.4	GARAGE SHEAR WALL DETAILS
S-7.0	GARAGE P.T. DETAILS
S-7.1	GARAGE P.T. DETAILS
S-7.2	GARAGE P.T. DETAILS
S-7.3	GARAGE BEAM ELEVATION
S-7.4	GARAGE BEAM ELEVATION
S-7.5	GARAGE BEAM ELEVATION
S-7.6	GARAGE BEAM ELEVATION
S-7.7	GARAGE BEAM ELEVATION
S-7.8	GARAGE BEAM ELEVATION
S-7.9	GARAGE BEAM ELEVATION
S-7.10	GARAGE BEAM ELEVATION
S-7.11	GARAGE P.T.SLAB, BEAM & FRAMING DETAILS
S-7.12	GARAGE FRAMING DETAILS
S-8.0	TYPICAL CMU WALL DETAILS
S-9.0	GARAGE STAIR #3 SECTIONS & DETAILS
S-9.1	GARAGE STAIR #4 SECTIONS & DETAILS
S-10.0	TOWER ROOF SCREEN SECTIONS & DETAILS

MECHANICAL

P0.1	PLUMBING NOTES,LEGEND, CALCS
P0.2	PLUMBING SITE PLAN
P1.1	TOWER-GROUND FLOOR PLUMBING PLAN
P1.2	TOWER-TYPICAL PLUMBING PLAN
P1.3	TOWER-TYPICAL WATER DISTRIBUTION PLAN
P1.4	TOWER-ROOF PLUMBING PLAN
P1.5	GARAGE-LEVEL 1 PLUMBING PLAN
P1.6	GARAGE-TYPICAL LEVEL PLUMBING PLAN, LEVELS 2-10
P1.7	GARAGE-LEVEL 11 PLUMBING PLAN
P2.1	TOWER-ENLARGED PLUMBING PLAN, GROUND FLOOR
P2.2	TOWER-ENLARGED PLUMBING PLAN, GROUND FLOOR
P2.3	TOWER-ENLARGED PLUMBING PLAN, GROUND FLOOR ABOVE CEILING
P2.4	TOWER-ENLARGED PLUMBING PLAN, GROUND FLOOR ABOVE CEILING
P2.5	TOWER-ENLARGED PLUMBING PLAN, 2ND FLOOR
P2.6	TOWER-ENLARGED PLUMBING PLAN, 2ND FLOOR
P2.7	TOWER-ENLARGED PLUMBING PLAN, 3RD FLOOR
P2.8	TOWER-ENLARGED PLUMBING PLAN, 3RD FLOOR
P2.9	TOWER-ENLARGED PLUMBING PLAN, 4TH-45TH FLOOR
P2.10	TOWER-ENLARGED PLUMBING PLAN, 4TH-45TH FLOOR
P2.11	TOWER-ENLARGED PLUMBING PLAN, 46TH FLOOR
P2.12	TOWER-ENLARGED PLUMBING PLAN, 46TH FLOOR
P3.1	TOWER-GROUND FLOOR SANITARY PIPING DIAGRAMS
P3.2	TOWER-GROUND FLOOR SANITARY PIPING DIAGRAMS
P3.3	TOWER- SANITARY RISER DIAGRAMS
P3.4	TOWER- SANITARY RISER DIAGRAMS
P3.5	TOWER-TYPICAL UNIT SANITARY PIPING DIAGRAMS
P3.6	TOWER-TYPICAL UNIT SANITARY PIPING DIAGRAMS
P3.8	TOWER-GROUND FLR WATER PIPING DIAGRAMS
P3.9	TOWER-TYPICAL WATER DISTRIBUTION PIPING DIAGRAMS
P3.10	TOWER- WATER RISER DIAGRAMS
P3.11	TOWER-TYPICAL UNIT WATER PIPING DIAGRAMS
P3.12	TOWER-TYPICAL UNIT WATER PIPING DIAGRAMS
P3.13	GARAGE- SANITARY PIPING DIAGRAMS
P3.14	GARAGE- WATER PIPING DIAGRAMS
P4.1	PLBG EQUIPMENT SCHEDULES
P5.1	PLBG DETAILS
P5.2	PLBG DETAILS
M0.1	MECHANICAL NOTES,LEGEND,SITE PLAN,CALCS
M1.1	TOWER-GROUND FLOOR MECHANICAL PLAN
M1.2	TOWER-TYPICAL MECHANICAL PLAN
M1.3	TOWER-ROOF MECHANICAL PLAN
M1.4	GARAGE-LEVEL 1 MECHANICAL PLAN
M1.5	GARAGE-LEVEL 10 MECHANICAL PLAN
M2.1	TOWER-GROUND FLOOR ENLARGED MECHANICAL PLAN
M2.2	TOWER-GROUND FLOOR ENLARGED MECHANICAL PLAN
M2.3	TOWER-GROUND FLOOR ENLARGED MECHANICAL PLAN
M2.4	TOWER-ENLARGED TYPICAL MECHANICAL PLAN,2ND-46TH FLOOR
M2.5	TOWER-ENLARGED TYPICAL MECHANICAL PLAN,2ND-46TH FLOOR
M3.1	TOWER-DUCT RISER DIAGRAMS
M4.1	MECHANICAL EQUIPMENT SCHEDULES
M4.2	MECHANICAL EQUIPMENT SCHEDULES
M4.3	MECHANICAL EQUIPMENT SCHEDULES
M5.1	MECHANICAL DETAILS
FS0.1	FIRE SPRINKLER NOTES,LEGEND,CALCS,SITE PLAN
FS1.1	TOWER-GROUND FLOOR FIRE SPRINKLER PLAN
FS1.2	TOWER-TYPICAL FIRE SPRINKLER PLAN,2ND-46TH FLOOR
FS1.3	TOWER-ROOF FIRE SPRINKLER PLAN
FS1.4	GARAGE-LEVEL 1 FIRE SPRINKLER PLAN
FS1.5	GARAGE-TYPICAL FIRE SPRINKLER PLAN, LEVELS 2-9
FS1.6	GARAGE- FIRE SPRINKLER PLAN, LEVEL 10
FS1.7	GARAGE- FIRE SPRINKLER PLAN, LEVEL 11

ELECTRICAL

E0.1	ELECTRCIAL SYMBOL LIST
E0.2	ELECTRICAL SITE NOTES
E0.3	ELECTRICAL SITE PLAN
E0.4	LIGHTING SITE PLAN
E0.5	SITE ELECTRICAL DETAILS
E1.1	GROUND FLOOR POWER PLAN
E1.2	GROUND FLOOR TELECOMMUNICATIONS PLAN
E1.3	GROUND FLOOR SECURITY PLAN
E1.4	GROUND FLOOR FIRE ALARM PLAN
E1.5	GROUND FLOOR LIGHTING PLAN
E1.6	2ND TO 8TH FLOOR POWER PLAN
E1.7	2ND TO 8TH FLOOR TELECOMMUNICATIONS PLAN
E1.8	2ND TO 8TH FLOOR FIRE ALARM PLAN
E1.9	2ND TO 8TH FLOOR LIGHTING PLAN
E1.10	9TH TO 46TH FLOOR POWER PLAN
E1.11	9TH TO 46TH FLOOR TELECOMMUNICATIONS PLAN
E1.12	9TH TO 46TH FLOOR FIRE ALARM PLAN
E1.13	9TH TO 46TH FLOOR LIGHTING PLAN
E1.13	9TH TO 46TH FLOOR LIGHTING PLAN
E1.14	ROOF POWER AND SIGNAL PLAN
E1.15	ROOF LIGHTING PLAN
E2.1	GARAGE-GROUND LEVEL POWER PLAN
E2.2	GARAGE-GROUND LEVEL FIRE ALARM PLAN
E2.3	GARAGE-GROUND LEVEL LIGHTING PLAN
E2.4	GARAGE-TYPICAL LEVEL POWER PLAN
E2.5	GARAGE-TYPICAL LEVEL FIRE ALARM PLAN
E2.6	GARAGE-TYPICAL LEVEL LIGHTING PLAN
E2.7	GARAGE-10TH LEVEL POWER PLAN
E2.8	GARAGE-10TH LEVEL FIRE ALARM PLAN
E2.9	GARAGE-10TH LEVEL LIGHTING PLAN
E2.10	GARAGE-11TH LEVEL POWER PLAN
E2.11	GARAGE-11TH LEVEL FIRE ALARM PLAN
E2.12	GARAGE-11TH LEVEL LIGHTING PLAN
E3.1	TYPICAL UNIT ELECTRICAL PLANS- UNITS 01,03,04,05
E3.2	TYPICAL UNIT ELECTRICAL PLANS- UNITS 06,07,08,10
E3.3	TYPICAL UNIT ELECTRICAL PLANS- UNIT 110
E4.1	UNIT POWER RISER ONE LINE DIAGRAM
E4.2	480/277V COMMON AREA ONE LINE DIAGRAM
E4.3	TELEPHONE RISER DIAGRAM
E4.4	CATV RISER DIAGRAM
E4.5	FIRE ALARM RISER DIAGRAM
E4.6	PARKING STRUCTURE ELECTRICAL DIAGRAM
E4.7	CORRIDOR POWER AND LIGHT RISER DIAGRAM
E4.8	SECURITY DIAGRAM
E4.9	TYPICAL UNIT ONT, LIGHTING CONTROL DIAGRAMS
E5.1	LUMINAIRE SCHEDULE
E5.2	PANEL SCHEDULES
E5.3	PANEL SCHEDULES
E5.4	ELECTRICAL DETAILS
FS2.1	TOWER- FIRE SPRINKLER PIPING DIAGRAM
FS2.2	GARAGE- FIRE SPRINKLER PIPING DIAGRAM
FS3.1	FIRE SPRINKLER DETAILS, EQUIPMENT SCHEDULE
FS3.2	FIRE SPRINKLER DETAILS

REVISIONS

NO.	DATE	
.	.	.

AZUTOSHI YATO ☆ LICENSED PROFESSIONAL ARCHITECT No.3271 ☆ HAWAII, U.S.A.

Expiration Date: 4/30/2014

THIS PROJECT WAS PREPARED BY ME OR UNDER MY SUPERVISION AND CONSTRUCTION OF THIS PROJECT WILL BE UNDER MY SUPERVISION.

KAKAAKO WORKFORCE HOUSING PER
SUBCHAPTER 4 OF 2011 MAUKA PLAN AND RULES

801 SOUTH STREET
HONOLULU, HAWAII

INDEX TO DRAWINGS

KAZU YATO, AIA & ASSOCIATES, INC.
2033 ROOKTOP TERRACE
HONOLULU, HI 96822
TEL: (808) 945-0040
FAX: (808) 945-0041

DATE	DRAWN	CHECK	FILE
	KY	KY	

SHEET

T1.1

CONSTRUCTION PLANS

KAKAAKO WORKFORCE HOUSING

801 SOUTH STREET

TAX MAP KEY: (1) 2 - 1 - 047 : 003 & 004

HONOLULU, OAHU, HAWAII

DPP FILE NO. 2012/SUB-80

OWNER & DEVELOPER: DOWNTOWN CAPITAL, LLC
215 N. KING STREET, SUITE 1000
HONOLULU, HAWAII 96817-6710

BILLS ENGINEERING INC.

CIVIL / ENVIRONMENTAL ENGINEERING
1124 FORT STREET MALL, SUITE 200
HONOLULU, HAWAII 96813
PH: (808) 792-2022 FAX: (808) 792-2033

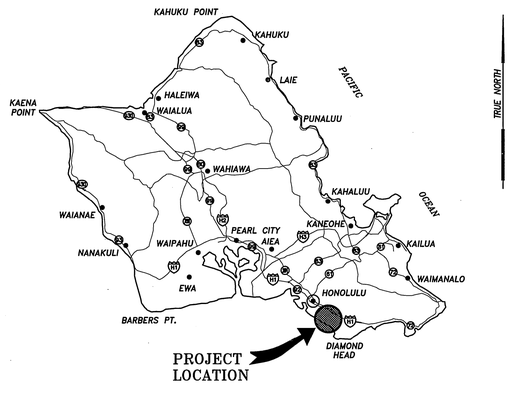

VICINITY MAP
Not to Scale

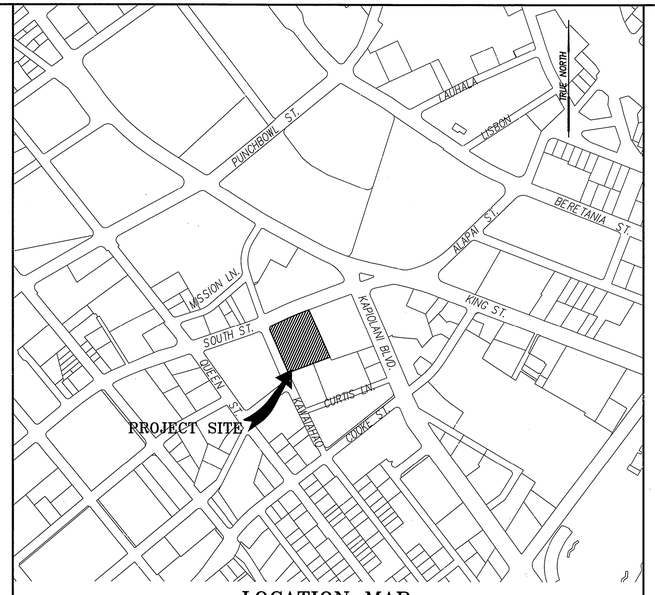

LOCATION MAP
Not to Scale

INDEX TO DRAWINGS

SHEET NO	DESCRIPTION
C-1	TITLE SHEET
C-2	GENERAL NOTES - 1
C-3	GENERAL NOTES - 2
C-4	GENERAL PLAN
C-5	GRADING PLAN
C-6	SITE PLAN
C-7	UTILITY PLAN
C-8	PROFILES - 1
C-9	PROFILES - 2
C-10	WATER LINE LAYOUTS & PROFILES
C-11	MISCELLANEOUS DETAILS - 1
C-12	MISCELLANEOUS DETAILS - 2
C-13	WALL NOTES & DETAILS
C-14	EROSION CONTROL PLAN
C-15	TRAFFIC CONTROL PLAN -1
C-16	TRAFFIC CONTROL PLAN -2
C-17	SIGNING & STRIPING PLAN
C-18	DETAILS
E0.6	STREET LIGHTING SITE PLAN

APPROVED:

for DIRECTOR, DEPARTMENT OF PLANNING AND PERMITTING — 8/21/2013 DATE
CITY AND COUNTY OF HONOLULU
(For Site Grading & Construction in City ROW Only)

for CHIEF, ENVIRONMENTAL MANAGEMENT DIVISION, DEPARTMENT OF HEALTH — 5/22/13 DATE
STATE OF HAWAII

DPP JOB #2012/CP-281

801 SOUTH STREET

Tue, 21 May 2013 - 10:58am
I:\Projects\451-01 ANDERSEN SITE DEVELOPMENT\Const Plans\451-00 C-1 Title Sht.dwg

FILE	POCKET	FOLDER	NO.

CONSTRUCTION NOTES

1. All applicable construction work shall be done in accordance with the Standard Specifications for Public Works Construction, September 1986 and Standard Details for Public Works Construction, September 1984, as amended, of the Department of Public Works, City and County of Honolulu and the Counties of Kauai, Maui and Hawaii.
2. The underground pipes, cables or ductlines known to exist by the engineer from his search of records are indicated on the plans. The Contractor shall verify the locations and depths of the facilities and exercise proper care in excavating in the area. Wherever connections of new utilities to existing utilities are shown on the plans, the Contractor shall expose the existing lines at the proposed connections to verify their locations and depths prior to excavation for the new lines.
3. No Contractor shall perform any construction operation so as to cause falling rocks, soil or debris in any form to fall, slide or flow into existing City drainage systems, or adjoining properties, streets or natural watercourses. Should such violations occur, the Contractor may be cited and the Contractor shall immediately make all remedial actions necessary.
4. The Contractor shall be responsible for conformance with the applicable provisions of the water quality and water pollution control standards contained in Hawaii Administrative Rules, Title 11, Chapter 54, "Water Quality Standards" and Title 11, Chapter 55, "Water Pollution Control", as well as Chapter 14 of the Revised Ordinances of Honolulu, as amended. Best Management Practices shall be employed at all times during construction.
5. The Contractor shall notify the Civil Engineering Branch, D.P.P. at 768–8084 to arrange for inspectional services and submit two (2) sets of approved Construction Plans seven (7) days prior to commencement of construction work.
6. The Contractor may submit a substitution request to precast and City owned and/or maintained drainage structure (ex., catch basins, drain manholes, drain inlets, culverts, etc). However, prior to construction and installation of any precast structure, the Contractor shall a) submit (6) sets of shop drawings to the Civil Engineering Branch, D.P.P. and obtain a written approval and b) notify the Civil Engineering Branch, D.P.P. at 768–8084 to arrange for inspectional services. Non–compliance with any of these requirements shall mean immediate suspension of all precast construction work and rejection of all precast structures already constructed.
7. Confined Space
   For entry by City personnel, including inspectors, into a permit required confined space as defined in 29 CFR Part 1910.146(b), the Contractor shall be responsible for providing:
   I. All safety equipment required by the confined space regulations applicable to all parties other than the construction industry, to include, but not limited to, the following:
      a. Full body harnesses for up to two personnel.
      b. Lifeline and associated clips.
      c. Ingress/egress and fall protection equipment.
      d. Two–way radios (walkie–talkies) if out of line–of–sight.
      e. Emergency (escape) respirator (10–minute duration).
      f. Cellular telephone to call for emergency assistance.
      g. Continuous gas detector (calibrated) to measure oxygen, hydrogen sulfide, carbon monoxide and flammables (capable of monitoring at a distance at least 20 feet away).
      h. Personal multi–gas detector to be carried by inspector.
   II. Continuous forced air ventilation adequate to provide safe entry conditions.
   III. One attendant/rescue personnel topside (two, if conditions warrant it).
8. Pursuant to Chapter 6E, HRS, in the event any artifacts or human remains are uncovered during construction operations, the Contractor shall immediately suspend work and notify the Honolulu Police Department, the State Department of Land and Natural Resources–Historic Preservation Division (692–8015). In addition, for non–City projects, the Contractor shall inform the Civil Engineering Branch, D.P.P. (768–8084); and for City projects, notify the responsible City agency.
9. For projects abutting State Highways' rights–of–way, the owner or his authorized representative shall notify the State Department of Transportation, Highways Division, Oahu District, Drainage Discharge Unit at 831–6793 for an assessment of State Highways permit requirements.
10. For Bench Mark, see sheet C–5.

GRADING NOTES

1. All grading work shall be done in accordance with Chapter 14, Articles 13, 14, 15 & 16 as related to Grading, Soil Erosion and Sediment Control of the Revised Ordinances of Honolulu, 1990, as amended, & Soils Reports by AECOM entitled "Report of Geotechnical Exploration Workforce Housing Development Honolulu, Hawaii" dated June 4, 2012.
2. No Contractor shall perform any grading operation so as to cause falling rocks, soil or debris in any form to fall, slide or flow onto adjoining properties, streets or natural watercourses. Should such violations occur, the Contractor may be cited and the Contractor shall immediately make all remedial actions necessary.
3. The Contractor, at his own expense, shall keep the project area and surrounding area free from dust nuisance. The work shall be in conformance with the air pollution control standards contained in the Hawaii Administrative Rules, Title 11, Chapter 60.1, "Air Pollution Control".
4. The underground pipes, cables or ductlines known to exist by the engineer from his search of records are indicated on the plans. The Contractor shall verify the locations and depths of the facilities and exercise proper care in excavating in the area. Wherever connections of new utilities are shown on the plans, the Contractor shall expose the existing lines at the proposed connections to verify their locations and depths prior to excavation for the new lines.
5. Adequate provisions shall be made to prevent surface waters from damaging the cut face of an excavation or the sloped surfaces of a fill. Furthermore, adequate provisions shall be made to prevent sediment–laden runoff from leaving the site.
6. All slopes and exposed areas shall be sodded or planted as soon as final grades have been established. Planting shall not be delayed until all grading work has been completed. Grading to final grade shall be continuous, and any area within which work has been interrupted or delayed shall be planted.
7. Fills in slopes steeper than 5:1 shall be keyed.
8. The City shall be informed of the location of the borrow/disposal site for the project when the application for a grading permit is made. The borrow/disposal site must also fulfill the requirements of the grading ordinance.
9. No grading work shall be done on Saturdays, Sundays and holidays at any time without prior notice to the Director D.P.P., provided such grading work is also in conformance with the Community Noise Control Standards contained in the Hawaii Administrative Rules, Title 11, Chapter 46, "Community Noise Control".
10. The limits of the area to be graded shall be flagged before the commencement of the grading work.
11. All grading operations shall be performed in accordance with the applicable provisions of the water quality and water pollution control standards contained in the Hawaii Administrative Rules, Title 11, Chapter 54, "Water Quality Standards" and Title 11, Chapter 55, "Water Pollution Control" and if applicable, the NPDES permit for the project.
12. Where applicable and feasible the measures to control erosion and other pollutants shall be in place before any earth moving phase of the grading is initiated.
13. Temporary erosion controls shall not be removed before permanent erosion controls are in–place and established.
14. Temporary Erosion Control Procedures shall be submitted for approval prior to application for grading permit.
15. If the grading work involves contaminated soil, then all grading work shall be done in conformance with applicable State and Federal requirements.
16. For non–City projects, the Contractor shall notify the Civil Engineering Branch, D.P.P. at 768–8084 to arrange for inspectional services and submit two (2) sets of approved Construction Plans seven (7) days prior to commencement of construction work. For City projects, the Contractor shall coordinate inspectional services with the responsible City agency.
17. Pursuant to Chapter 6E, HRS, in the event any artifacts or human remains are uncovered during construction operations, the Contractor shall immediately suspend work and notify the Honolulu Police Department, the State Department of Land and Natural Resources–Historic Preservation Division (692–8015). In addition, for non–City projects, the Contractor shall inform the Civil Engineering Branch, D.P.P. (768–8084); and for City projects, notify the responsible City agency.
18. For all projects, which will disturb one (1) acre or more of land, the Contractor shall not start construction until a Notice of General Permit Coverage (NGPC) is received from the Department of Health, State of Hawaii, and has satisfied any other applicable requirements of the NPDES permit program. Also, for non–City and other non–governmental agency projects, the Contractor shall provide a written copy of the NGPC to the Permitting and Inspection Section, Civil Engineering Branch, D.P.P., at least seven (7) calendar days before the start of the construction. For City or other governmental projects, the Contractor should provide a written copy of the NGPC to the appropriate City department or governmental agency per their requirements.
19. All grading and construction work shall implement measures to ensure that the discharge of pollutants from the construction site will be reduced to the maximum extent practicable and will not cause or contribute to an exceedance of water quality standards.
20. For Bench Mark, see sheet C–5.
21. Building permit for retaining walls shall be obtained prior to commencement of grading work on site.
22. Non–compliance to any of the above requirements shall mean immediate suspension of all work, and remedial work should commence immediately. All costs incurred shall be billed to the violators. Furthermore, violators shall be subjected to administrative, civil and/or criminal penalties.

Fri, 03 May 2013 – 1:16pm
C:\Users\buhr\Documents\H_PROJ\451–00 ADVERTISER BLDG\CONST PLANS\451–00 C–2 GenNotes_1.dwg

DUST CONTROL NOTE:

1. The contractor shall be fully responsible for the measures it will take for the control of fugitive dust from the worksite. The measures may include but are not limited to watering of the site and fill material being placed, and delaying work in the week that prevailing wind direction should shift. The contractor, at his own expense shall keep the project area and surrounding area (adjacent residential and school property) free from dust nuisance. The work shall be in conformance with the air pollution stds. contained in the Hawaii Administrative Rules: Chapt. 11–60, 'Air Pollution Control'. Dust shall be kept within acceptable levels at all times, incld. non–working hours, weekends, and holidays in conformance with Title 11, Chapter 60.1–Air Pollution Control, as amended, of the State Dept. of Health, Public Health Regulations. The method of dust control, and all costs incurred therefore shall be the responsibility of the contractor. The contractor shall be responsible for all dust damage claims.

PUBLIC HEALTH SAFETY AND CONVENIENCE NOTE:

1. The Contractor shall observe and comply with all Federal, State and local laws required for the protection of the Public Health and Environmental quality.

SEWER NOTES

1. All sewer construction shall be performed in accordance with the City's Standard Specifications, September 1986, the Department of Public Works Standard Details, September 1984, current City practices and Revised Ordinances of Honolulu, 1990, as amended, and the Design Standards of the Department of Wastewater Management Volume 1, July 1993.
2. In the event that any change in alignment or grade for the proposed sewers are required due to unforeseen conflict with other utilities, the engineer in charge or the maker of plans shall be responsible for the required changes which are to be presented to the Department of Planning & Permitting (DPP) for approval.
3. The Contractor shall notify the Construction Management Branch, Wastewater Division, DDC, at 768–8772 or 768–8770 to arrange for inspection services and submit four (4) sets of approved construction plans seven (7) days prior to commencement of sewer work. The contractor shall pay for all inspections costs.
4. Crushed rock cradle is permitted where soil is stable. In areas of unstable soil, the maker of the plans and the construction engineer will determine the pipe support required.
5. Trees in the road right–of–way shall be situated a minimum of five (5) feet from the City's sewer lines.
6. The underground pipes, cables or ductlines known to exist by the engineer from his search of records are indicated on the plans. The Contractor shall verify the location and depth of the facilities, including and affecting sewerlines in the presence of the Wastewater Inspector and exercise proper care in excavating the area. The Contractor shall be responsible and shall pay for all damaged utilities.
7. Sewer Lateral shall be clear of and not conflicting with any other utility. Minimum Horizontal and Vertical clearances shall be strictly observed and followed.
8. Slope for sewer laterals shall be 1.00% and laterals shall be 6" diameter pipes unless otherwise noted.
9. Building plumbing facilities shall be controlled by sewer lateral inverts.
10. The Contractor shall be responsible for maintaining continuous sewer service to all affected areas during construction.
11. The consulting engineer shall submit to the Department of Planning & Permitting mylar "as–built" tracings of the construction plans as actually constructed, showing all changes from the original plans.
12. The Contractor shall be responsible for any sewage spills caused during construction. The Contractor shall notify the State Department of Health and utilize appropriate sampling and analyzing procedures. The Contractor shall be responsible for all public notifications and press releases.
13. The Contractor shall install "Rainstopper" manhole inserts in all sewer manholes with Type "SA" frame and cover.
14. All drop and shallow drop sewer manholes shall be lined with epoxy liners. Also, if the velocity exceeds 10 ft./sec., the sewer manhole shall be epoxy lined.
15. The Contractor shall obtain approval for advance sewer riser agreement at Department of Planning & Permitting and obtain building permit for plumbing work before any advance riser is made.
16. All sewer line within easements shall be wrapped with geotextile root barrier.
17. S4C pipe cradle seals shall be installed 10 feet from all sewer manholes to prevent soil migration. (See detail sheet C–11).
18. Geotextile fabric to envelop the pipe cradle and select backfill material shall be provided where water or unstable soil conditions are encountered.
19. For entry by City Personnel, including inspectors, into a permit required confined space as defined in 29 CFR Part 1910.146(b), the Contractor shall be responsible for providing:
    A. All safety equipment required by the confined space regulations applicable to all parties other than the construction industry, to include, but not limited to, the following:
       1.) Full body harnesses for up to two personnel.
       2.) Lifeline and associated clips.
       3.) Ingress/egress and fall protection equipment.
       4.) Two–way radios (walkie–talkies) if out of line–of–sight.
       5.) Emergency (escape) respirator (10 minute duration).
       6.) Cellular telephone to call for emergency assistance.
       7.) Continuous gas detector (calibrated) to measure O_2, H_2S, CO_2 and flammables (capable of monitoring at a distance at least 20 feet away).
       8.) Personal multi–gas detector to be carried by inspector.
    B. Continuous forced air ventilation adequate to provide safe entry conditions.
    C. One attendant/rescue personnel topside (two, if conditions warrant it).
20. Contractor to maintain minimum 5' horizontal clearance between sewerline, electrical boxes & manholes and minimum 3' horizontal clearance between sewerline & electrical ductlines.
21. When connecting to a live sewer line, the Contractor shall abide by all conditions that the State Department of Health sets forth to mitigate any wastewater spill that may occur. The Contractor shall inform the City Inspector five (5) working days prior to the actual connection. The Contractor shall be responsible for any fines and penalties due to any spills resulting from the connection.
22. No rungs shall be installed inside new sewer manholes.
23. If Contractor encounters flow monitoring devices such as special sewer manhole cover embedded with solar panels; notify C&C of Honolulu, ENV–CSM, at 768–7272 to coordinate temporary removal.
24. Contractor shall maintain visibility and maintenance access to live sewer manhole locations at all times, including during non–work hours and paving operations.
25. Contractor shall use manhole debris catching device when performing manhole height adjustments work and remove any construction debris that has fallen into the manhole. Disposal of construction debris in the sewer system is strictly prohibited.
26. For precast sewer manholes, the consulting engineer shall submit four (4) sets of shop drawings to DPP for approval. After the shop drawings are approved, the manufacturer shall notify the Construction Management Branch, Wastewater Division, DDC, at 768–8772 or 768–8770 to arrange for inspection for services for concrete pours made at its plant seven (7) days prior to pour.

SPECIAL PROVISIONS FOR PVC PLASTIC SEWER PIPE

1. Polyvinyl chloride (PVC) plastic sewer pipe and appurtenances used on this project shall conform to the requirements of Section 21 of the Standard Specifications for Public Works Construction dated September 1986, except as modified herein.
   A. General. PVC gravity sewer pipe and fittings shall conform to the requirements of C–900/C–905 (DR 18 min. wall thickness).
   B. Acceptance. The basis for acceptance shall be the inspection of pipe, fittings and couplings, the tests specified herein and in Section 21, and compliance with the specifications. At the time of manufacture, each lot of pipe and fittings shall be inspected for defects and tested for impact, stiffness and flattening in accordance with ASTM D3034. The Engineer may require certification by the manufacturer that the test results comply with specification requirements. When the pipe is delivered to the job site, the Engineer may require the Contractor to provide additional testing to insure the quality of the pipe at no expense to the City. Pipe which is not installed within 120 days of the latest factory test shall not be used without prior approval of the Engineer.
   C. Selection of Test Pipe. When testing is required by the Engineer, one test pipe shall be selected at random by the Engineer from each 1200 linear feet or fraction thereof of each size of pipe delivered to the job site but no less than one test pipe per lot. A lot shall be defined as pipe having the same identification marking. The length of specimen of each selected pipe shall be a minimum of 8 feet.
   D. Cell Classification. Pipe shall be made of PVC plastic having a cell classification of 12454–B, 13364–A, or 13364–B as defined in ASTM D1784. The fittings shall be made of PVC plastic having a cell classification D1784. The fittings shall be made of PVC plastic having a cell classification of 12454–B, 12454–C, or 13343–C. PVC compounds of other cell classifications shall be pre–qualified by the manufacturer.
   E. Joints. Pipe joints shall be bell and spigot type with an elastomeric gasket. The gasketed joints shall be manufactured with a socket configuration which will preclude improper installation of the gasket and will insure the gasket remains in place during the joining operation. All pipe shall have a home mark on the spigot end to indicate proper penetration when the joint is made.
   F. Identification Marks. All pipe fittings and couplings shall be clearly marked at an interval not to exceed 5 feet as follows:
      (1) Nominal pipe diameter.
      (2) PVC cell classification.
      (3) Company, plant, shift, ASTM, SDR, and date designations.
      (4) Service designation and legend.
   G. Dimensions and Tolerances:

Table – Pipe Dimension (inches)

Nominal Size	Average O.D.	Tolerance on Average	Minimum Wall Thickness	Approx. Wt./20' Length (lbs.)
12	13.500	±0.018	0.733	382

   H. Chemical Resistance. The PVC compound for cell classifications not specifically identified in item D above shall be prequalified by the pipe manufacturer by meeting the chemical resistance tests which follow. Compound samples and molded test specimens shall be prepared in accordance with ASTM D543.

   Tensile and Izod impact exposure specimens shall be immersed in the solutions specified in Table 2 for a period of 112 days. Test specimens shall be conditioned to constant weight at 110°F (43.3°C) before and after submersion. The solutions shall be kept at a temperature of 77°F ±5°F (24°C ±3°C). At 28–day intervals, selected specimens shall be removed, washed, surface dried and tested.

TABLE 2 – Test Solutions

Chemical Solution	Concentration (%)
Sulfuric acid	20 *
Sodium hydroxide	5
Ammonium hydroxide	5 *
Nitric acid	1 *
Ferric chloride	1
Soap	0.1
Detergent (Linear alkyl benzyl sulfonate or LAS)	0.1
Bacteriological	BOD not less than 700 ppm.

* Volumetric percentages of concentrated reagents of C.P. grade

Weight change specimens shall be 2 inches in diameter and may be molded discs or discs cut from the pipe wall. Specimens shall be conditioned for seven days at 43° ±2°C, cooled in a desiccators for the three hours at 23° ±2°C, weighed, and then immersed in the solutions. At 4 week intervals, selected specimens shall be removed, washed, surface dried and weighed. These same specimens shall then be reconditioned for seven days at 43° ±2°C, cooled in a desiccators for three hours at 23° ±2°C and again weighed.

Initial and post exposure specimens shall meet the following requirements when tested at 23° ±2°C:

Property	ASTM Test Method	Cell Class Minimum Values 12454	13343	13364
Tensile Strength (Yield), psi	D 638	7000	6000	6000
Impact Strength, ft–lbs/in.	D 256 Method A	0.65	1.5	1.5
Weight Change, %	D 543	1.5	1.5	1.5

If any specimen fails to meet the requirements at any time during the 112 day exposure period, the material will be subject to rejection.

   I. Trench Excavation. Trenches for PVC sewer pipe shall be excavated and prepared in accordance with the requirements of Section 11 of the Standard Specifications for Public Works Construction except as modified herein.
      (1) Overexcavation. The maximum allowable trench width shall be equal to the outside diameter of the PIPE plus 18–inches for pipe up to 12" (I.D.). If the trench excavation exceeds the computed maximum allowable trench width whether by excavation, cave–in, or by ground movement, the Contractor shall provide at his own expense additional bedding, another type of bedding, and/or a higher strength of pipe designated by the Engineer. Where shoring is required, the allowable width of the trench shall be increased only by the thickness of the sheathing.
   J. Pipe Bedding. Where unsuitable material is encountered at the subgrade and additional excavation is required, the void created by the additional excavation shall be filled and compacted with bedding material specified on the plans or special provisions. Where concrete is specified to bed the pipe, the top of the concrete shall be considered as the top of the bedding.

      Bedding material shall consist of one of the following:
      (1) Beach sand.
      (2) No. 8 or No. 67 aggregate conforming to the gradation requirements of ASTM C33.
      (3) 3/8" filter aggregate.
      (4) Native free–draining granular material having a minimum sand equivalent of 30 or having a coefficient of permeability greater than 0.001 centimeter per second.
      (5) Other material approved by the Engineer.

   Bedding material shall first be placed so that the pipe is supported for the full length of the barrel with full bearing on the bottom segment of the pipe equal to a minimum of 0.4 times the outside diameter of the barrel. If the pipe is to be laid in a rock excavation, the rock shall be removed such that no ribs, rocks, or solid projections shall be within 6 inches of the sewer pipe horizontally and there shall be at least 4 inches of bedding below the pipe.

   Compaction of the bedding from the bottom of the pipe to 12 inches above the pipe barrel by jetting will be permitted provided that the foundation material will not soften or be otherwise damaged by the applied water. Flooding or ponding methods of achieving the required relative density will not be permitted. The size and length of jet pipe, quantities and pressure of water, and jetting locations shall be sufficient to compact the bedding to 87% minimum relative density. Compaction of the backfill from 12 inches above the pipe barrel to the finish surface shall conform to the requirements of Section 11.4 of the Standard Specifications for Public Works Construction.

SPECIAL PROVISIONS FOR PVC PLASTIC SEWER PIPE (CONT'D)

   K. Mandrel Test of PVC Pipe. A mandrel test shall be performed no sooner than 30 days after the trench backfill is completed. In roadway areas the 30–day period shall begin after installation and compaction of bedding, backfill and subbase to within 2 feet of the finished pavement grade. A rigid mandrel shall be pulled through the pipe by hand between adjacent manholes to measure for obstructions (deflections, joint offsets and lateral pipe intrusions). The mandrel shall have a cross section equivalent to a circle having a diameter at least 95 percent of the specified average inside diameter of the pipe. The minimum length of the circular portion of the mandrel shall be equal to the nominal diameter of the pipe. This test shall be performed by the Contractor in the presence of the Engineer. All material, equipment and labor required to perform the test shall be provided by the Contractor at no cost to the City. Any section of pipe that fails to permit passage of the mandrel will not be accepted until properly repaired or replaced and retested.
2. Bedding for PVC Pipe sewer shall be Class "B" as shown on S–47 of the Standard Details for Public Works Construction unless otherwise noted.
3. The maximum design deflection (flattening) for plastic pipe shall be 5 percent. The maximum SDR (Standard Dimension Ratio of pipe outside diameter to pipe wall thickness) shall be 35.
4. Special watertight manhole couplings per standard detail S–48 will be required for all manhole connections. Couplings may be cast directly into cast–in–place manholes or grouted into precast concrete manholes with non–shrink or expansion type grout.
5. For connections of PVC lateral sewers to mains of different materials, an approved saddle wye fitting constructed of the same material as the main line shall be installed. Connection to the saddle fitting shall be made by means of an approved flexible rubber coupling in accordance with the coupling manufacturer's installation recommendations or by other means acceptable to the Engineer.
6. Environmental Department will allow the use of PVC pipe up to 16" Diameter, Type C–900 & C–905 only.

DRAINAGE NOTE (PRIVATE SYSTEM)

1. Drain pipes shall be HANCOR Sure–Lok ST IB HDPE with a smooth interior and annular exterior corrugations and shall conform to ASTM F2306 or AASHTO M294, Type S for 12– through 60–inch. and AASHTO M252, Type S for 4– through 10–inch. Flexible watertight connectors conforming to ASTM F2510/F2510M shall be provided at connections to concrete structures.

APPROVED:

Scott Gushu 6/28/13
CHIEF, WASTEWATER BRANCH, DPP — DATE

for Melvin Takahama 7/17/13
CHIEF, CIVIL ENGINEERING BRANCH, DPP — DATE

REVISIONS | NO. | DATE

Exp: 4/30/14
DAVID B. BILLS — LICENSED PROFESSIONAL ENGINEER — No. 4516–C — HAWAII, U.S.A.

THIS PROJECT WAS PREPARED BY ME OR UNDER MY SUPERVISION AND CONSTRUCTION OF THIS PROJECT WILL BE UNDER MY OBSERVATION

KAKAAKO WORKFORCE HOUSING PER
SUBCHAPTER 4 OF 2011 MAUKA PLAN AND RULES
801 SOUTH STREET
HONOLULU, HAWAII
TMK: (1) 2-1-47: 3 & 4

GENERAL NOTES - 1

KAZU YATO, AIA & ASSOCIATES, INC.
2033 ROUNDTOP TERRACE
HONOLULU, HI 96822
TEL: (808) 945–0040
FAX: (808) 945–0041

DATE: MAY 2013 | DRAWN: RE | CHECK: DB | FILE

SHEET
C-2

WATER NOTES

1. Unless otherwise specified, all materials and construction of water system facilities and appurtenances shall be in accordance with the City and County of Honolulu Board of Water Supply's "WATER SYSTEM STANDARDS", dated 2002, the "WATER SYSTEM EXTERNAL CORROSION CONTROL STANDARDS", Volume 3, dated 1991, and all subsequent amendments and additions.
2. Nuts and bolts for flange connections within meter boxes shall be bronze or stainless steel except coupling adapters where "COR–TEN" (U.S. Steel) or "MAYARI" (Bethlehem Steel) may be used. Flange connections outside of meter box may use "COR–TEN" or "MAYARI" type nuts and bolts.
3. Test pressure shall be one of the following:

   a. Prevailing line pressure, joints left exposed for 24 hours to check for leaks prior to backfill.

   b. 150 psi. During the 30–minute pressure test, the pressure shall not drop more than 10 psi.
4. The contractor shall chlorinate the entire inside surface of each pipe and fitting with disinfection solution of 5 ounces of sodium hypochlorite mixed with 10 gallons of water (for connection only).
5. The project shall pay the applicable water system facilities and/or one–time service charge, and for the meter which will be furnished by BWS and installed by the Contractor when the lateral is installed.
6. The Contractor shall notify BWS Capital Projects Division, Construction Section in writing and submit six (6) sets of approved construction plans one week prior to commencing work on the water system.
7. The Contractor shall cut and plug all existing unused laterals at the main whether or not shown on the plans. Meter and valve boxes to be or already abandoned shall be demolished or removed and properly disposed of. The damaged area shall be repaired to an equal or better condition than the immediate area. All work shall be done at the expense of the Contractor.
8. After installation of tapping sleeve and valve prior to actual tapping operations, the assembly shall be tested at 150 psi on both sides of the valve.
9. All plans approved by the Board of Water Supply are based solely on the adequacy of the water supply.
10. For meters 3 inches and larger (Compound, F.M. and Detector Check), contractor shall notify Customer Care Division, Service Engineering Section, in writing after the plan is approved, no later than 120 days, prior to withdrawing meter from BWS storeyard. Such notice shall indicate number, size, and type of meter (Compound, F.M. or Detector Check) and approximate month and year meter is anticipated to be drawn out. If the approved plan is allowed to lapse, the 120–day notice will be voided.
11. Board of Water Supply approval of these plans does not constitute a water commitment. Availability of water will be determined when building permit is presented to the Department. Water commitment will depend upon the status of the water system at that time. Should water service be made available, the water commitment will be effective when the project receives an approved building permit from the Building Department. All water commitments will be canceled in the event the building permit is canceled.
12. The project shall be subject to the Board of Water Supply's Cross–Connection Control requirements prior to issuance of the Building Permit.
13. The installation, chlorination and testing of the water main and facilities after the meter shall not be the responsibility of the Board of Water Supply.
14. The Contractor shall be responsible for the protection of all water lines during construction. The Contractor shall be especially careful when excavating behind water lines, tees, and bends wherever there is a possibility of water line movement due to the removal of the supporting earth beyond the existing reaction blocks. The Contractor shall take whatever measures necessary to protect the water lines, such as constructing special reaction blocks (with BWS approval) and/or modifying his construction method.
15. The existence and location of underground utilities and structures as shown on the plans are from the latest available data but is not guaranteed as to the accuracy or the encountering of other obstacles during the course of the work. The Contractor shall be responsible and pay for all damages to existing utilities. The Contractor shall not assume that where no utilities are shown, that none exist.
16. Prior to installation, the Contractor shall submit for approval by the Board of Water Supply, the manufacturer's certification that all cast iron (gray or ductile) fittings for the project conform in all respects to the "WATER SYSTEMS STANDARDS", dated 2002.
17. Polygon shape for mechanical joint glands as described in AWWA Standard C111 shall be "straight–sided" or an approved equal on a job–to–job basis.
18. Re–approval shall be required if this project is not under construction within a period of two years.
19. The Contractor/Developer shall obtain a NPDES permit prior the chlorination and/or dewatering. A copy of the permit shall be submitted to the Board of Water Supply, Capital Projects Division, Construction Section.
20. Install 4 mil. thick, non–metallic, blue colored, 6 inches wide warning tape over centerline of the pipe and below the base course along the entire length of trench. Tape should be marked with "CAUTION WATER LINE BURIED BELOW".
21. Typical Electronic Marker Installation:
    The contractor shall install electronic markers to ALL mains and test the electronic markers prior to installations to verify proper operation. BWS personnel shall verify the number and locations of placed electronic markers before final paving of the project.
22. The Contractor shall furnish and install polyethylene wrap, 3 feet minimum at all taps (for DI pipe and copper lateral combination only) and plastic pipe (PE tubing) 3 feet long after meters for all service lateral connections.
23. Soil resistivity for the site has a corrosion rating of 4 as reported by AECOM report dated March 5, 2013. All required electrical isolation procedures and corrosion control requirements shall apply.
24. The backflow preventer device must be installed before meter is issued.
25. Dimension "H" of the BWS Standard 6–inch Detector Check meter detail M31 must be 1'–6".
26. All ductile iron pipe, fittings, and valves shall be wrapped with two layers of 8 mil. Polyethylene wrap. (For corrosion rating of 2 to 5 only)

FOR ESTIMATING PURPOSES ONLY

DESCRIPTION OF WORK		ESTIMATE
6" DOMESTIC SERVICE		
6" COMPOUND METER		
INSTALLATION CHARGE	$ 2,995.00	$ 2,995.00
WATER SYSTEM FACILITIES CHARGES (WSFC) (3 COMPONENTS) 5957.5 FU X $204.12/FU (MFHR)	$1,216,044.90	$1,216,044.90
*CREDIT P/ID 1144305 P/ID 1144306	$ *	$ *
______ FIRE SERVICE		
______ METER	N/A	N/A
INSTALLATION CHARGE	N/A	N/A
ONE–TIME CHARGE	$	$ N/A
	TOTAL	$1,219,039.90

*CREDIT WILL BE DETERMINED WHEN THE BUILDING PERMIT APPLICATION IS SUBMITTED FOR BWS REVIEW AND APPROVAL

THIS ESTIMATE REFLECTS ONLY THE MINIMUM CHARGES FOR THE PROJECT AND IS SUBJECT TO CHANGE. A FORMAL WRITTEN QUOTATION MAY BE OBTAINED AND ALL PAYMENTS FOR THE MINIMUM CHARGES SHOWN ON THE QUOTATION MADE WITHIN 30 DAYS AFTER THE CONSTRUCTION PLAN IS APPROVED BY BWS. HOWEVER, ACTUAL CHARGES WILL BE DETERMINED WHEN THE BUILDING PERMIT APPLICATION IS SUBMITTED FOR BWS REVIEW. ALL CHARGES IN EXCESS OF THE MINIMUM WILL ALSO BE SUBJECT TO THE 30 DAY PERIOD. IF PAYMENTS ARE NOT RECEIVED WITHIN THE 30 DAY PERIOD, THE PROJECT WILL BE SUBJECT TO THE PREVAILING RATES.

Flow Requirements for new water meter installation:

PREMISE : NEW — FLOW REQUIREMENTS — METER : NEW

	FU	GPM	GPD
Domestic	5957.5	735	24,000
Irrigation*	20	15	2,975
Total	5977.5	735	26,975

*Irrigation to be done during non–peak hours
Number of stories : 46 floors

FOR BWS USE ONLY:
SERVICE ENGINEERING STAFF, CREATE A NEW SERVICE FOR THIS PROJECT INSTEAD OF RELOCATING AND ENLARGING THE EXISTING SERVICE. PLEASE INCLUDE A NOTE IN THE PREM–NOTES TO REFLECT THE FIXTURE UNIT CREDITS BEING TRANSFERRED FROM THE EXISTING PREMISE TO THE NEW PREMISE. ALSO INCLUDE A NOTE IN THE NEW PREMISE REFERRING BACK TO THE OLD PREMISE.

CREATE A 'CUT AT MAIN' FA ON THE OLD PREMISE WHEN THE NEW SERVICE IS BEING PAID FOR, AND INSERT NOTES REFERRING TO THE PROJECT NAME.

FOR ESTIMATING PURPOSES ONLY (WL "C" @ 2+78.6 KAWAIAHAO ST)

DESCRIPTION OF WORK		ESTIMATE
______ DOMESTIC SERVICE		
________ METER		
INSTALLATION CHARGE	$ N/A	$ N/A
WATER SYSTEM FACILITIES CHARGES (WSFC) (3 COMPONENTS)	$	$ N/A
*CREDIT P/ID ______ P/ID ______		
8" FIRE SERVICE		
8" DC METER	$ 1,861.00	$ 1,861.00
INSTALLATION CHARGE	N/A	N/A
ONE–TIME CHARGE	$21,100.00	$21,100.00
	TOTAL	$22,961.00

*CREDIT WILL BE DETERMINED WHEN THE BUILDING PERMIT APPLICATION IS SUBMITTED FOR BWS REVIEW AND APPROVAL

THIS ESTIMATE REFLECTS ONLY THE MINIMUM CHARGES FOR THE PROJECT AND IS SUBJECT TO CHANGE. A FORMAL WRITTEN QUOTATION MAY BE OBTAINED AND ALL PAYMENTS FOR THE MINIMUM CHARGES SHOWN ON THE QUOTATION MADE WITHIN 30 DAYS AFTER THE CONSTRUCTION PLAN IS APPROVED BY BWS. HOWEVER, ACTUAL CHARGES WILL BE DETERMINED WHEN THE BUILDING PERMIT APPLICATION IS SUBMITTED FOR BWS REVIEW. ALL CHARGES IN EXCESS OF THE MINIMUM WILL ALSO BE SUBJECT TO THE 30 DAY PERIOD. IF PAYMENTS ARE NOT RECEIVED WITHIN THE 30 DAY PERIOD, THE PROJECT WILL BE SUBJECT TO THE PREVAILING RATES.

Flow Requirements for new water meter installation:

FIRE FLOW 2000 GPM

MECHANICAL/ELECTRICAL DIVISION NOTES

1. The Contractor shall notify the Joint Pole Committee two (2) weeks in advance of any relocation of utility pole(s) that may be necessary.
2. The Contractor shall notify the Mechanical/Electrical Division, Department of Design and Construction, three (3) working days prior to commencing work on the street lighting system (phone: 768–8431)
3. The street lighting system shall be kept operational during construction. Any relocation required shall be approved by the Mechanical/Electrical Division, Department of Design and Construction, and paid for by the Contractor.
4. The Contractor shall be responsible for any damages to the existing street lighting facilities. Any and all damages to these facilities shall be repaired by the Contractor at his cost in accordance with requirements of the City and County of Honolulu.
5. The Contractor shall be responsible for any damages to the City's existing communications fiber optic cable system. Any and all damages to these facilities shall be repaired by the Contractor at his cost in accordance with the requirements of the City and County of Honolulu.

TRAFFIC SIGNALS AND TECHNOLOGY DIVISION NOTES:

1. The Contractor shall notify the Traffic Signals and Technology Division Department of Transportation Services, three (3) working days prior to commencing work on the Traffic Signal System (Phone: 768–8387)
2. The Traffic Signal System shall be kept operational during construction any relocation required shall be approved by the Traffic Signals and Technology Division, Department of Transportation Services, and paid by the Contractor.
3. The Contractor shall be responsible for any damages to the existing Traffic Signal Facilities, including but not limited to the Traffic Signal Fiber Optics Cable System, and Interconnect System. Any and all damages to the Facility shall be repaired by the Contractor at their cost in accordance with requirements of the Traffic Signals and Technology Division, Department Transportation Services.

TRAFFIC NOTES FOR WORK ON CITY & COUNTY STREETS

1. A permit shall be obtained from the Department of Transportation Services before work on any portion of a public street or highway may begin. Construction traffic control plans approved by the Department of Transportation Services and/or the Department of Planning and Permitting must be provided when applying for the permit.
2. The Contractor shall provide, install, and maintain all necessary signs and other protective facilities, which shall conform with the "Hawaii Administration Rules Governing the Use of Traffic Control Devices at Work Sites on or Adjacent to Public Streets and Highways" adopted by the Director of Transportation, and the current U.S. Federal Highways Administration's "Manual on Uniform Traffic Control Devices for Streets and Highways, Part VI – Traffic Controls for Street and Highway Construction and Maintenance Operations".
3. Work on any city street area may be performed only between the hours of 8:30 a.m. to 3:30 p.m., Monday through Friday, unless otherwise permitted by the Department of Transportation Services.
4. During working hours, the Contractor shall provide for through traffic. During non–working hours, all trenches shall be covered with a safe non–skid bridging material and all lanes shall be open to traffic.
5. As required by the Department of Transportation Services, the Contractor shall provide off–duty police officers to control the flow of traffic.
6. Where pedestrian walkways exist, they shall be maintained in passable condition or other facilities for pedestrians shall be provided. Passage between walkways at intersections shall likewise be provided.
7. Driveways shall be kept open unless the owners of the property using these rights–of–way are otherwise provided for satisfactorily.
8. Contractor shall reference to the approval of the Department of Transportation Services and the Department of Planning and Permitting, all existing traffic signs, posts and pavement markings prior to the commencement of construction. The Contractor shall replace or repair all traffic sign, posts, and pavement markings disturbed by his activities.
9. The Contractor shall notify the Department of Planning and Permitting at 768–8084 one (1) week prior to any work to be done on signs, posts and pavement markings .
10. No equipment shall be stored within street rights–of–way except at locations designated in writing and approved by the Department of Transportation Services.
11. Downtown Capital, LLC shall ensure that the contractor installs the construction traffic control devices in accordance with the MUTCD and the Hawaii Administration Rules as specified in Traffic Note #2.

FOR ESTIMATING PURPOSES ONLY (WL "B" @ 1+30 KAWAIAHAO ST)

DESCRIPTION OF WORK		ESTIMATE
______ DOMESTIC SERVICE		
________ METER		
INSTALLATION CHARGE	$ N/A	$ N/A
WATER SYSTEM FACILITIES CHARGES (WSFC) (3 COMPONENTS)	$	$ N/A
*CREDIT P/ID 1071168 P/ID ______	$	$
6" FIRE SERVICE		
6" DC METER	$ 1,326.00	$ 1,326.00
INSTALLATION CHARGE	N/A	N/A
ONE–TIME CHARGE	$ 12,100.00	$ 12,100.00
	TOTAL	$ 13,426.00

*CREDIT WILL BE DETERMINED WHEN THE BUILDING PERMIT APPLICATION IS SUBMITTED FOR BWS REVIEW AND APPROVAL

THIS ESTIMATE REFLECTS ONLY THE MINIMUM CHARGES FOR THE PROJECT AND IS SUBJECT TO CHANGE. A FORMAL WRITTEN QUOTATION MAY BE OBTAINED AND ALL PAYMENTS FOR THE MINIMUM CHARGES SHOWN ON THE QUOTATION MADE WITHIN 30 DAYS AFTER THE CONSTRUCTION PLAN IS APPROVED BY BWS. HOWEVER, ACTUAL CHARGES WILL BE DETERMINED WHEN THE BUILDING PERMIT APPLICATION IS SUBMITTED FOR BWS REVIEW. ALL CHARGES IN EXCESS OF THE MINIMUM WILL ALSO BE SUBJECT TO THE 30 DAY PERIOD. IF PAYMENTS ARE NOT RECEIVED WITHIN THE 30 DAY PERIOD, THE PROJECT WILL BE SUBJECT TO THE PREVAILING RATES.

Flow Requirements for new water meter installation:

FIRE FLOW 750 GPM

HPD – PARKING METER NOTE

The Contractor shall contact the Honolulu Police Department, Parking Meter Section at 832–7836 at least five (5) working days prior to any parking meter work.

HONOLULU FIRE DEPARTMENT NOTES

Access and Water Supply

1. Where underground water mains and hydrants are to be provided, they shall be installed, completed, and in service prior to construction. (Hawai'i State Fire Code 16.4.3.1.3)
2. Fire department access roads provided in accordance with 18.2.3 shall be provided at the start of a project and shall be maintained throughout construction. (Hawai'i State Fire Code 15.1.4)
3. Permanent fire department access road markings shall not be required until the building is complete or occupied for use. (Hawai'i State Fire Code 16.1.5)

Access to Building (Hawai'i State Fire Code 18.2.3.2)

4. A fire department access road shall extend to within 50 ft. (15 m.) of at least one exterior door that can be opened from the outside and that provides access to the interior of the building. (Hawai'i State Fire Code 18.2.3.2.1)
5. Provide a fire apparatus access road for every facility, building, or portion of a building hereafter constructed or moved into or within the jurisdiction when any portion of the facility or any portion of an exterior wall of the first story of the building is located more than 150 ft. (45 720 mm.) from a fire apparatus access road as measured by an approved route around the exterior of the building or facility. (Hawai'i State Fire Code 18.2.3.2.2)
6. When buildings are protected throughout with an approved automatic sprinkler system that is installed in accordance with NFPA 13, NFPA 13D, or NFPA 13R, the distance in 18.2.3.2.2 shall be permitted to be increased to 450 ft. (Hawai'i State Fire Code 18.2.3.2.2.1)
7. Fire access roads shall have an unobstructed width of not less than 20 ft. and an unobstructed vertical clearance of 13 ft. 6 in. (Hawai'i State Fire Code 18.2.3.4.1.1)
8. Fire Department access roads shall be designed and maintained to support the imposed loads of fire apparatus and shall be provided with an all–weather driving surface. (Hawai'i State Fire Code 18–2–3–4–2)
9. The turning radius of a fire apparatus access road shall meet county requirements. (Hawai'i State Fire Code 18.2.3.4.3.1)
10. Turns in fire department access roads shall maintain the minimum road width. (Hawai'i State Fire Code 18.2.3.4.3.2)
11. Provide a water supply, approved by the county, capable of supplying the required fire flow for fire protection to all premises upon which facilities or buildings, or portions thereof, are hereafter constructed or moved into or within the county.
12. On–site fire hydrants and mains capable of supplying the required fire flow shall be provided when any portion of the facility or building is in excess of 150 ft. (45 720 mm) from a water supply on a fire apparatus access road, as measured by an approved route around the exterior of the facility or building. (Hawai'i State Fire Code 18.3.1, as amended)
13. Fire department hose connections shall be located within 20 feet of a fire apparatus access road, not less than 18 inches and not more than 4 feet above grade, or as approved by the AHJ. Appropriate identification signs shall be provided as required by the AHJ. (Hawai'i State Fire Code 13.2.2.2 and 13.3.1.2.1, as amended)

APPROVED:

CHIEF, TRAFFIC REVIEW BRANCH, DPP — DATE 7/29/13

FOR MANAGER & CHIEF ENGINEER, BWS — DATE 6-24-2013
(FOR WORK AFFECTING BWS FACILITIES IN CITY/STATE RIGHT–OF–WAY AND BWS EASEMENTS ONLY)

REVISIONS | NO. | DATE

DAVID B. BILLS — LICENSED PROFESSIONAL ENGINEER — No. 4516–C — HAWAII, U.S.A. — Exp: 4/30/14

THIS PROJECT WAS PREPARED BY ME OR UNDER MY SUPERVISION AND CONSTRUCTION OF THIS PROJECT WILL BE UNDER MY OBSERVATION

KAKAAKO WORKFORCE HOUSING PER
SUBCHAPTER 4 OF 2011 MAUKA PLAN AND RULES
801 SOUTH STREET
HONOLULU, HAWAII
TMK: (1) 2-1-47: 3 & 4

GENERAL NOTES - 2

KAZU YATO, AIA & ASSOCIATES, INC.
2033 ROUNDTOP TERRACE
HONOLULU, HI 96822
TEL: (808) 945–0040
FAX: (808) 945–0041

DATE MAY 2013 | DRAWN RE | CHECK DB | FILE

SHEET C-3

Wed, 05 Jun 2013 – 10:57am
C:\Users\buhr\Documents\H_PROJ\451–00 ADVERTISER BLDG\CONST PLANS\451–00 C–3 GenNotes_2.dwg

GENERAL PLAN

Scale: 1" = 20'

HYDRAULIC DATA

A= Area (Acres)
Q= Quantity (cfs)
s= Slope (ft/ft)
L= Length of Pipe (Ft)
vf= Velocity at Friction Slope (fps)
dn= Actual depth of flow (ft)

DRAINAGE CRITERIA

Runoff Coefficient, C= 0.90
Intensity of One Hour Rainfall, Tc= 9 minutes
One Hour Rainfall, i_{10} = 2.25 inches, i_{50}= 3.0 inches
Correction Factor, CF= 1.6
Rainfall Intensity, i_{10} = 3.6 inches, i_{50}= 4.8 inches
Unit flow= Q_{10}/A= 3.24 cfs/acre, Q_{50}/A= 4.32 cfs/acre

APPROVED:

Scott Rushe
CHIEF, WASTEWATER BRANCH, DPP — 6/28/13 DATE

FOR MANAGER & CHIEF ENGINEER, BWS — 6-24-13 DATE
(FOR WORK AFFECTING BWS FACILITIES IN CITY/STATE RIGHT-OF-WAY AND BWS EASEMENTS ONLY)

Melvin Takahara
CHIEF, CIVIL ENGINEERING BRANCH, DPP — 7/17/13 DATE

REVISIONS

NO.	DATE	

DAVID B. BILLS — LICENSED PROFESSIONAL ENGINEER — No. 4516-C — HAWAII, U.S.A.
Exp: 4/30/14

THIS PROJECT WAS PREPARED BY ME OR UNDER MY SUPERVISION AND CONSTRUCTION OF THIS PROJECT WILL BE UNDER MY OBSERVATION

KAZU YATO, AIA & ASSOCIATES, INC.
2033 ROUND TOP TERRACE
HONOLULU, HI 96822
TEL: (808) 945-0040
FAX: (808) 945-0041

DATE	DRAWN	CHECK
JUNE 2013	RE	DB

FILE

SHEET

C-4

KAKAAKO WORKFORCE HOUSING
SUBCHAPTER 4 OF 2011 MAUKA PLAN AND RULES
801 SOUTH STREET
HONOLULU, HAWAII
TMK: (1) 2-1-47: 3 & 4

GENERAL PLAN

Fri, 14 Jun 2013 - 10:11pm
C:\Users\bun\Documents\Projects\1310\Arch\KAKAAKO WORKFORCE BLDG\CONST PLANS\437-00 C-4 General Plan_Runoff Map.dwg
C:\Users\bun\Documents\Projects\1310\Arch\KAKAAKO WORKFORCE BLDG\CONST PLANS\437-00 C-4 General Plan_Runoff Map.dwg

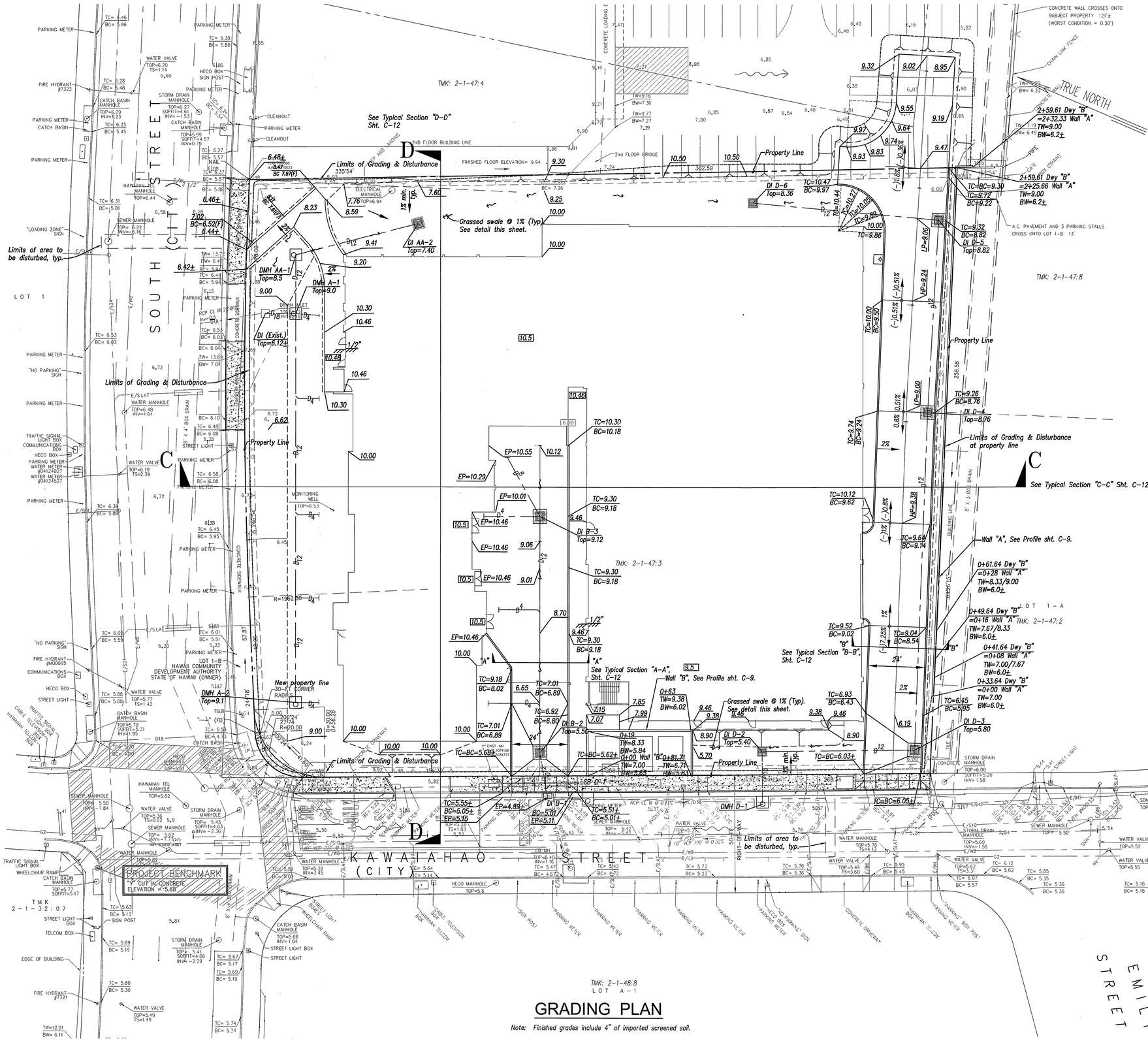

LEGEND

- Property Line
- Limits of Area to be Repaved
- Limits of Grading
- 40± Spot Elevation
- Existing Drainage Flow
- Existing Drainline
- Existing Sewerline
- Existing Waterline
- New Drainline
- 8.0 Finished Floor Elevation
- 40.0(F) Future Spot Elevation

PERMANENT POST-CONSTRUCTION BEST MANAGEMENT PRACTICES FOR THIS PROJECT ARE:

1. Install grassed swale. See detail this sheet.
1. Affix stencil on private drain inlets. See detail Sht. C-11.
2. Install sediment inserts in all drain inlets – exist. DI on DL A, DI AA-2, DI B-2, DI B-3, DI D-2, DI D-3, DI D-4, DI D-5 & DI D-6. See detail Sht C-14.

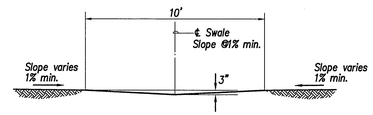

SWALE DETAIL

Not to Scale

EARTHWORK SUMMARY*

TOTAL
EXCAVATION= 0 CY
EMBANKMENT= 7,550 CY
AREA TO BE GRADED = 1.78 ACS
AREA TO BE DISTURBED = 1.86 ACS

*FOR GRADING PERMIT ONLY

GRADING PLAN

Note: Finished grades include 4" of imported screened soil.

Scale in Feet

APPROVED:

Melvin Tokeshima
FOR CHIEF, CIVIL ENGINEERING BRANCH, DPP

7/17/13
DATE

REVISIONS | DATE | NO.

DAVID B. BILLS
LICENSED PROFESSIONAL ENGINEER
No. 4516-C
HAWAII, U.S.A.
Exp: 4/30/14

THIS PROJECT WAS PREPARED BY ME OR UNDER MY SUPERVISION AND CONSTRUCTION OF THIS PROJECT WILL BE UNDER MY OBSERVATION

KAKAAKO WORKFORCE HOUSING
SUBCHAPTER 4 OF 2011 MAUKA PLAN AND RULES
801 SOUTH STREET
HONOLULU, HAWAII
TMK: (1) 2-1-47: 3 & 4

GRADING PLAN

KAZU YATO, AIA & ASSOCIATES, INC.
2033 ROUNDTOP TERRACE
HONOLULU, HI 96822
TEL: (808) 945-0040
FAX: (808) 945-1041

DATE: JUNE 2013 | DRAWN: RE | CHECK: DB | FILE:

SHEET

C-5

Fri, 14 Jun 2013 - 10:13am
C:\Users\Author\Documents\VL_PROJ\431-09 ADVERTISER BLDG\CONST PLANS\431-09 C-5 Grading Plan.dwg

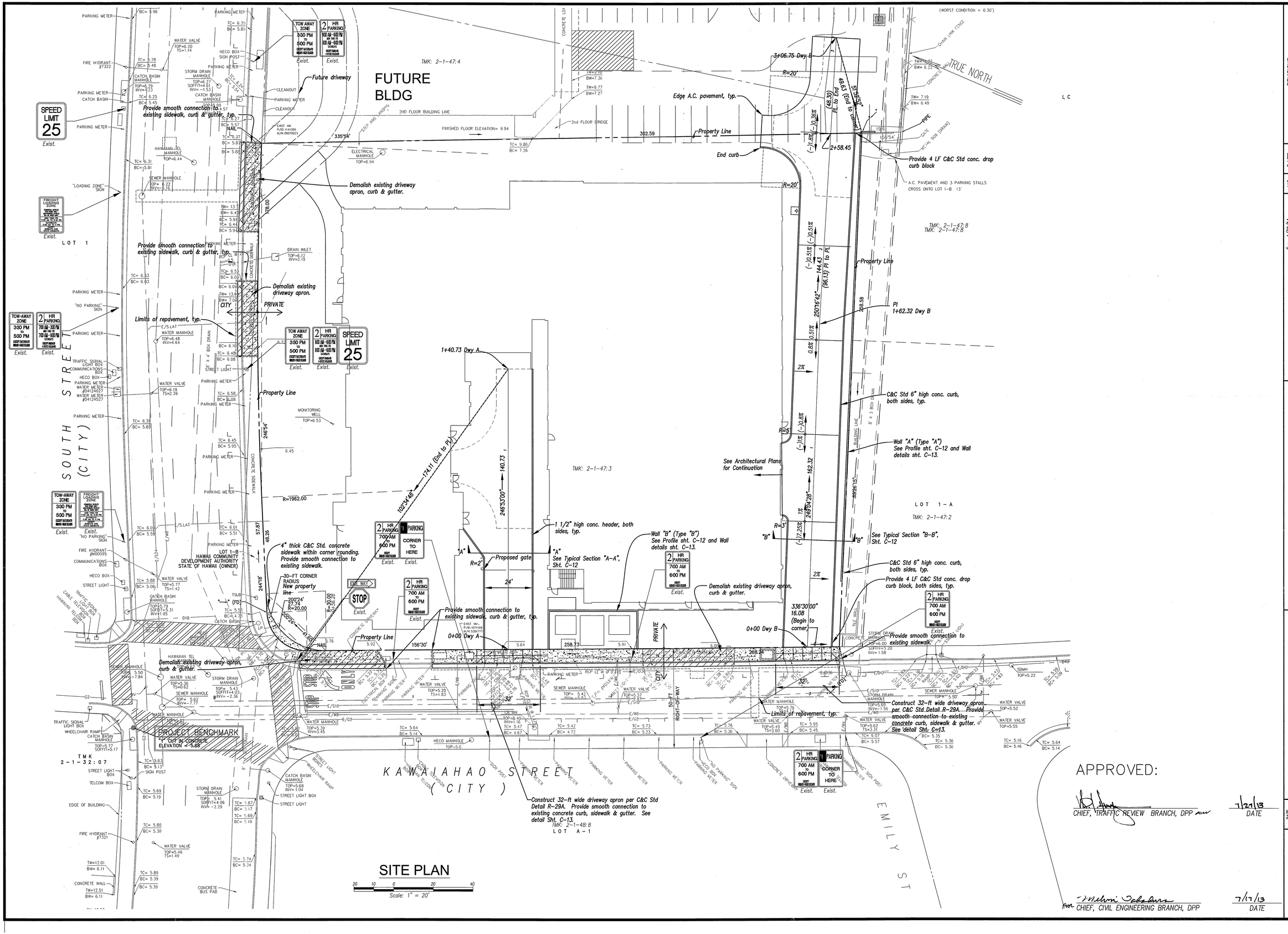

APPROVED:

CHIEF, TRAFFIC REVIEW BRANCH, DPP — 7/27/13 DATE

For CHIEF, CIVIL ENGINEERING BRANCH, DPP — 7/17/13 DATE

REVISIONS

NO.	DATE	

Exp: 4/30/14

DAVID B. BILLS LICENSED PROFESSIONAL ENGINEER No. 4516-C HAWAII, U.S.A.

THIS PROJECT WAS PREPARED BY ME OR UNDER MY SUPERVISION AND CONSTRUCTION OF THIS PROJECT WILL BE UNDER MY OBSERVATION

KAKAAKO WORKFORCE HOUSING PER

SUBCHAPTER 4 OF 2011 MAUKA PLAN AND RULES
801 SOUTH STREET
HONOLULU, HAWAII
TMK: (1) 2-1-47: 3 & 4

SITE PLAN

KAZU YATO, AIA & ASSOCIATES, INC.
2033 ROUNDTOP TERRACE HONOLULU, HI 96822
TEL: (808) 945-0040 FAX: (808) 945-0041

DATE	DRAWN	CHECK	FILE
JUNE 2013	RE	DB	

SHEET

C-6

Fri, 14 Jun 2013 - 10:07am
C:\Users\buhr\Documents\K_PROJ\451-00 ADVERTISER BLDG\CONST PLANS\451-00 C-6 Site Plan.dwg

FUTURE BLDG

TMK: 2-1-47:4

Exist. WM & Type "E" copper lateral
P/ID:1144305
M/N:09070023
After the new meter is installed, the customer must call BWS to terminate the existing water service & request for BWS to remove the existing 2-inch water meter. Contractor to cut & plug lateral at main. Also, Contractor to remove & dispose of the existing meter box & restore the area to an equal or better condition.

0+62 SL "A"
SMH A-1 (Drop)
Top=6.4
~~Inv=0.51 (15" in)~~ 0.49 (16" in)
~~Inv=-5.04 (15" out)~~ -5.12 (16" out)

0+00 SL "A"
Connect to exist. SMH
~~Inv=-5.41 (15")~~ -5.49 (16")
Inv=-6.16± (exist. 24")
Rechannelize base. See Sht C-11.

0+13 DL "A"
=0+00 DL "AA"
DMH A-1
Top=9.0
Inv=5.26 (4" & 12" in, DL A)
Inv=4.47 (18" out & 12" in, DL AA)
Mod. C&C Std Det. D-17 with Type DA frame & cover

0+00 DL "A"
Connect to exist. drain inlet box.
Top=6.12±
Inv=3.40 (New 18" HDPE)
Inv=0.78± (Exist. 18" RCP)

1+99 SL "A"
CO A-4
Top=9.3
Inv=3.45 (8" lat)
Inv=3.37 (10")

0+99 DL "A"
4" Drain Conn.
Inv=6.45 (4")
Inv=6.12 (12")

1+34 DL "A"
4" Drain Conn.
Inv=6.80 (4")
Inv=6.47 (12")

2+63 SL "A"
SMH A-5
Top=9.3
~~Inv=3.77 (8" lat)~~
Inv=3.69 (10") @ 10'± lat.

Exist. FH #95

1+77 DL "A"
DMH A-2
Top=9.1
Inv=6.90 (12" out & 4" in)
Mod. C&C Std Det. D-17 with Type DA frame & cover

Exist. WM & 3" galv. lateral
P/ID:1144306
M/N:10070105
After the new meter is installed, the customer must call BWS to terminate the existing water service & request for BWS to remove the existing 2-inch water meter. Contractor to cut & plug lateral at main. Also, Contractor to remove & dispose of the existing meter box & restore the area to an equal or better condition.

0+50 SL "B"
SMH B-1
Top=8.8
Inv=3.77 (10")

0+25 DL "AA"
DMH AA-1
Top=8.5
Inv=4.66 (12")
Mod. C&C Std Det. D-17 with Type DA frame & cover

0+85 SL "A"
=0+00 SL "B"
SMH A-2
Top=6.2
Inv=2.80 (10" in)
Inv=1.07 (10" SL B)
~~Inv=0.85 (10" out)~~
0.87 (10" out)

Limits of repaving, typ.

Public Sewer

Private Sewer

SL "A"
S=15.16%

14.5 LF RC Jkt
See det. sht. C-11

0+79 DL "AA"
DI AA-2 (Type A)
Top=7.4
Inv=5.20 (12")

5 LF RC Jkt

Conn. to Drain Line
4" HDPE Stub
10' @ 10%
Inv=6.26 (4")
See Plumbing Plan for cont.

1+29
1+27 SL "A"
CO A-3
Top=9.8
~~Inv=3.09 (8" lat)~~
Inv=3.01 (10") @ 10' lat.
5.02

10" 8" PVC Stub
5' @ 2%
~~Inv=3.19 (8")~~ 3.12 (10")
See Plumbing Plan for cont.

0+49 DL "A"
4" Drain Conn.
Inv=5.95 (4")
Inv=5.62 (12")

8" PVC Stub
5' @ 2%
Inv=3.55 (8")
See Plumbing Plan for cont.

Conn. to Drain Line
4" HDPE Stub
10' @ 1%
Inv=6.05 (4")
See Plumbing Plan for cont.

Conn. to Drain Line
4" HDPE Stub
10' @ 1%
Inv=6.55 (4")
See Plumbing Plan for cont.

Conn. to Drain Line
4" HDPE Stub
10' @ 1%
Inv=6.90 (4")
See Plumbing Plan for cont.

WL "B" (FS)
0+73.82 Dwy A (o/s 17.5' Lt)
Inv=4.5 (6")
See Plumbing Plan for cont.

Connection to Sewer
10" 8" PVC Stub
5' @ 2%
~~Inv=3.87~~ 3.79
See Plumbing Plan for cont.

Conn. to Drain Line
8" HDPE Stub
10' @ 1%
Inv=7.00 (8")
See Plumbing Plan for cont.

For Enlargement see Sht C-10

New property line 30-FT CORNER RADIUS

Exist. 8" DC WM & meter box
Replace with 6" DC WM
P/ID:1071168
M/N:5281777

6" Compound WM & box

Private Sewer

Public Sewer

Conn. to Drain Line
1+35.73 Dwy A (o/s=14' Lt)
0+45 DL "B"
8" HDPE stub
29'@2.7%
Inv=6.98 (8")
See Plumbing Plan for cont.

Conn. to Drain Line
1+10.53 Dwy A (o/s=24' Lt)
4" HDPE stub
24'@ 1%
Inv=6.44 (4")
See Plumbing Plan for cont.

1+10.53 Dwy "A"
=1+20 DL "B"
DI B-3
Inv=6.20 (4" & 8")
Inv=1.83 (12")
See Det. Sht C-12

Conn. to Drain Line
0+71 Dwy A (o/s=17.6' Lt)
4" HDPE stub
17.6'@ 1%
Inv=1.94 (4")
See Plumbing Plan for cont.

0+73.82 Dwy A (o/s 10.5' Lt)
WL "B" (FS)
1-6" 1/4 Bend
1- Conc. Blk.

0+64 Dwy "A"(o/s=17.6' Lt)
WL "A"
Inv=4.5 (6")
See Plumbing Plan for cont.

0+66.35 Dwy "A"(o/s=10.5' Lt)
1-3/4" ARV (WP=76.0 psi)
1-Valve box & cover

0+64 Dwy "A"(o/s=15.5' Lt)
=0+92 WL "A"
1-6" 1/4 Bend
1-Conc. blk.

Conn. to Drain Line
0+31 Dwy A (o/s=22' Lt)
4" HDPE stub 22'@ 1%
Inv=1.58 (4"). See Plumbing Plan for cont.

0+45.43 Dwy B (o/s=15.63' Rt)
=0+82 SL "C"
Inv=-0.17 (6")
See Plumbing Plan for cont.

0+23 Dwy B (o/s=6.82' Rt)
=0+50 SL "C"
Inv=-0.81 (6")

See Elec. Plan

Exist. FH #5316

0+22 DL "D"
DI D-2 (Type A)
Top=5.40
Inv=0.08 (18" out & 12" in)

0+61 WL "C" (FS)
0+02.42 Dwy B
(o/s 1.45' Lt)
1-8" 1/4 Bend, DI (H)
1-Conc. Blk.

0+43 WL "C" (FS)
1-8" 1/4 Bend, DI (H), FL
1-Conc. Blk.

3+96 DL "D"
=2+39.58 Dwy B
(o/s=70.6' Lt)
DI D-6 (Type A)
Top=8.36
Inv=6.10 (12")

3+11.75 (o/s=2.0' Lt)
End 8" WL
1-8" Cap w/ 2 ½" CO
1-Conc Blk
Contr. to provide unions & adapters as necessary

3+14 DL "D"
=2+36.79 Dwy B
(o/s=9.09' Rt)
DI D-5 (Type A)
Inv=5.28 (12")

8" FS WL "C"
2+18.65 Dwy B
(o/s 2.0' Lt)
FH conn
1-8"x6" Tee,
1-6" G.V., Cl. 150
1-Valve Box
19 LF 6" PVC Pipe, Cl 150
1-FH Extension
1-FH w/ conc. slab
2-Conc. Blks
1-FH Marker
1-Anchor Blk

TMK: 2-1-47:8

8" FS WL "C"
1+62.32 Dwy B
(o/s 2.0' Lt)
Deflect pipe

2+32 DL "D"
=1+54.31 Dwy B
(o/s=9.09' Rt)
DI D-4 (Type A)
Inv=4.46 (12")
Inv=3.54 (12")

8" FS WL "C"
0+12.93 Dwy B
(o/s 1.91' Lt)
Deflect pipe

0+88 DL "D"
=0+10.4 Dwy B
(o/s=9.09' Rt)
DI D-3 (Type A)
Inv=2.10 (12" in)
Inv=0.64 (12" out)
See detail Sht. C-12, typ.
Demolish/remove exist. DI. Cut & plug existing drain.

8" DC WM & box

Limits of repaving, typ.

Property Line

TMK: 2-1-47:2

LOT 1-A

DWY "B"

8" FS WL

DL "D"

WL "C"

WL "A"

WL "B"

DL "A"

DL "AA"

DL "B"

1+68.7± Kawaiahao St
=0+00 DL "C"
CB C-1
Inv=0.20± (Ex. 36")
Construct C&C Std Type B CB over exist. 36" RCP drain.

For Enlargement see Sht C-10

2+43.4± Kawaiahao St
=0+00 DL "D"
DMH D-1
Inv=(-)0.11± (Ex. 36" & new 18")
Construct C&C Std D-18 DMH over exist. 36" RCP drain. DMH shall be located outside of gutter.

0+0.5 Dwy "A"
(o/s=6.9' Lt)
=0+28 SL "C"
CO C-1
Inv=-1.63 (6")

0+10 Dwy "B"
=0+19 DL "B"
DI B-2 (Type A)
Inv=0.82 (12")
See detail Sht. C-12, typ.

1+51.6± Kawaiahao St
0+00 DL "B"
Exist. CB #H-4, Modified to DI B-1
Inv=0.63 (new 12")
Inv=0.27± (Ex. 18")
Inv=-0.76± (Ex. 36")
Modify CB to DI. See detail Sht. C-12.

1+42± Kawaiahao St (o/s=4.45' Rt)
=0+00 SL "C"
Conn to exist. 10" VCP sewer
Inv=-5.83 (New 6" lat)
Inv=-5.99± (Ex. 10")
Provide saddle wye w/ conc. collar

TMK: 2-1-48:8
LOT A-1

KAWAIAHAO STREET (CITY)

EMILY STREET

50-FT RIGHT-OF-WAY

PROJECT BENCHMARK
"Y" CUT IN CONCRETE
ELEVATION = 5.68

TMK
2-1-32:07

TRUE NORTH
Scale: 1" = 20'

UTILITY PLAN
Scale: 1" = 20'

APPROVED:

Scott Urabe — 6/28/13
CHIEF, WASTEWATER BRANCH, DPP — DATE

7/21/13
CHIEF, TRAFFIC REVIEW BRANCH, DPP — DATE

6-28-2013
For MANAGER & CHIEF ENGINEER, BWS — DATE
(FOR WORK AFFECTING BWS FACILITIES IN CITY/STATE RIGHT-OF-WAY AND BWS EASEMENTS ONLY)

7/17/13
For CHIEF, CIVIL ENGINEERING BRANCH, DPP — DATE

NO.	DATE	REVISIONS
1	9/3/13	Add 2" Blow Off Assembly, Relocate 12" Blow Off Assembly, Revise Grades & Locations
2	9/3/13	Revise Grades & Locations

DAVID B. BELLS — LICENSED PROFESSIONAL ENGINEER — No. 4516-C — HAWAII
Exp: 4/30/14

THIS PROJECT WAS PREPARED BY ME OR UNDER MY SUPERVISION AND TO THE BEST OF MY KNOWLEDGE THE PROJECT WILL BE UNDER MY OBSERVATION

KAKAAKO WORKFORCE HOUSING PER
SUBCHAPTER 4 OF 2011 MAUKA PLAN AND RULES
801 SOUTH STREET
HONOLULU, HAWAII
TMK: (1) 2-1-47: 3 & 4

UTILITY PLAN

KAZU YATO, AIA & ASSOCIATES, INC.
2033 SOUNDVIEW TERRACE
HONOLULU, HI 96822
TEL: (808) 946-0400
FAX: (808) 945-0044

DATE: MAY 2013 | DRAWN: RE | CHECK: DB | FILE:

SHEET
C-7

Wed, 05 Jun 2013 - 12:03pm
C:\Users\John\Documents\HL_PROJ\451-00 ADVERTISOR BLDG\CONST PLANS\451-00 C-7 Utility Plan.dwg

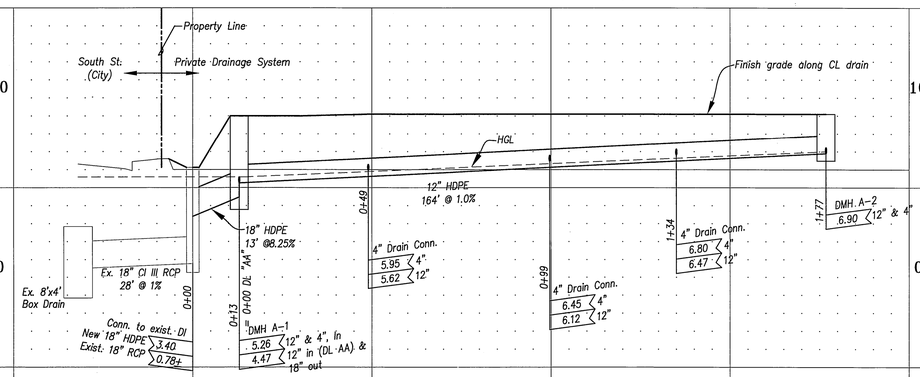

DRAIN LINE "A"

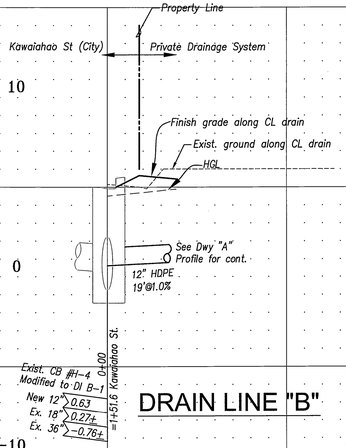

DRAIN LINE "B"

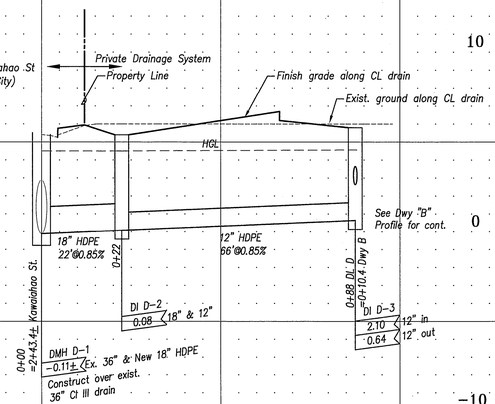

DRAIN LINE "D" (0+00 TO 0+88)

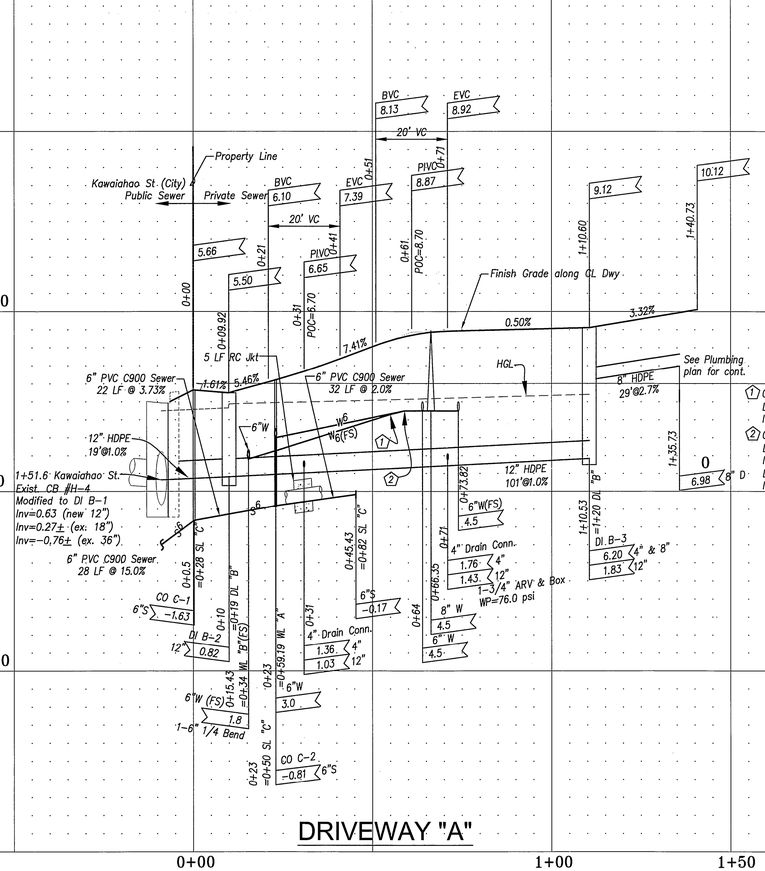

DRIVEWAY "A"

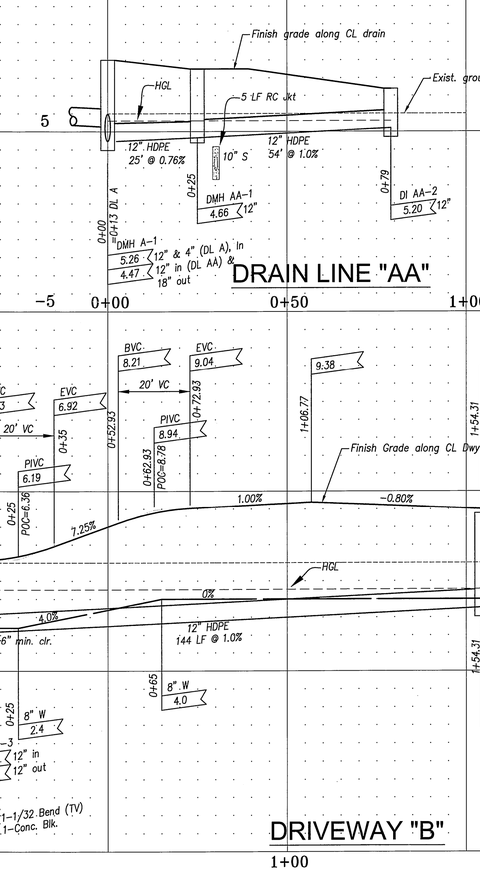

DRAIN LINE "AA"

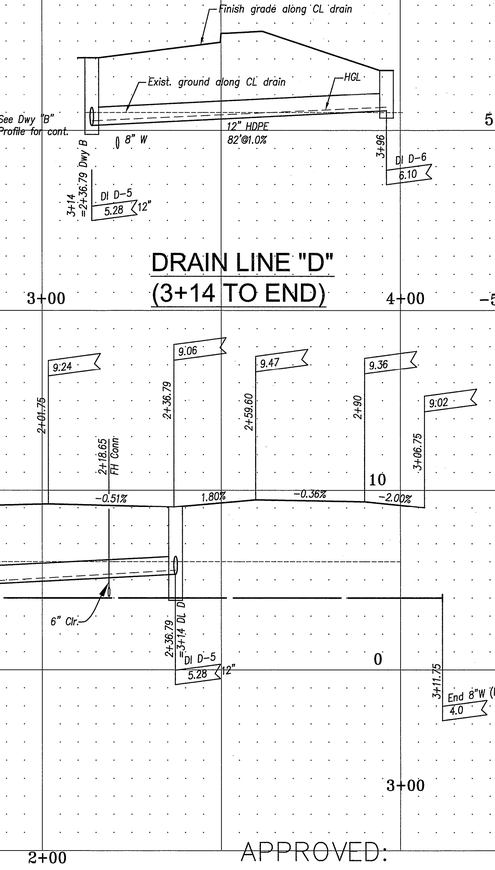

DRAIN LINE "D" (3+14 TO END)

DRIVEWAY "B"

PROFILES

Horiz. 20 10 0 20 40
Vert. 4 3 2 1 0 2 4 6 8
Scale in Feet

APPROVED:

for Melvin Takahara
CHIEF, CIVIL ENGINEERING BRANCH, DPP

7/17/13
DATE

REVISIONS

NO.	DATE

DAVID B. BILLS
LICENSED PROFESSIONAL ENGINEER
No. 4516-C
HAWAII, U.S.A.
Exp.: 4/30/14

THIS PROJECT WAS PREPARED BY ME OR UNDER MY SUPERVISION AND CONSTRUCTION OF THIS PROJECT WILL BE UNDER MY OBSERVATION

KAKAAKO WORKFORCE HOUSING

SUBCHAPTER 4 OF 2011 MAUKA PLAN AND RULES
801 SOUTH STREET
HONOLULU, HAWAII
TMK: (1) 2-1-47: 3 & 4

PER

AND RULES

PROFILES - 1

KAZU YATO, AIA & ASSOCIATES, INC.
2033 ROUNDTOP TERRACE
HONOLULU, HI 96822
TEL: (808) 945-0040
FAX: (808) 945-0041

DATE	DRAWN	CHECK	FILE
MAY 2013	RE	DB	

SHEET

C-8

Wed, 01 May 2013 — 5:40pm
C:\Users\User\Documents\KJ_PROJ\451-00 ADMIN\SER BLDG\CONST PLANS\451-00 C-8_9 Profiles 1_2.dwg

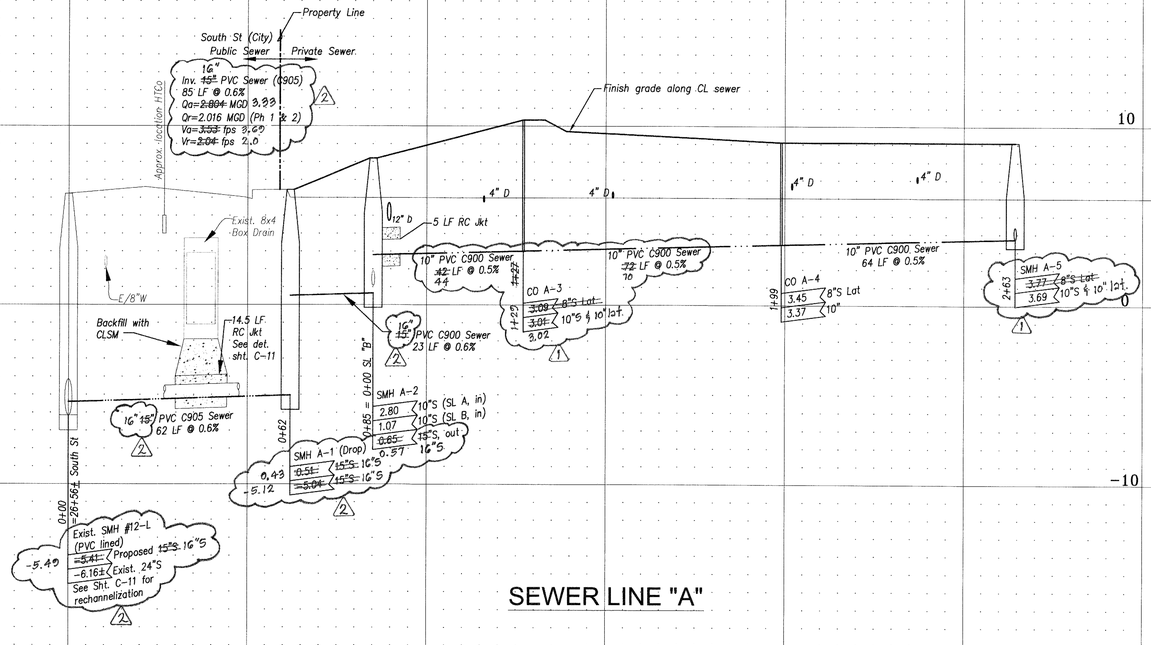

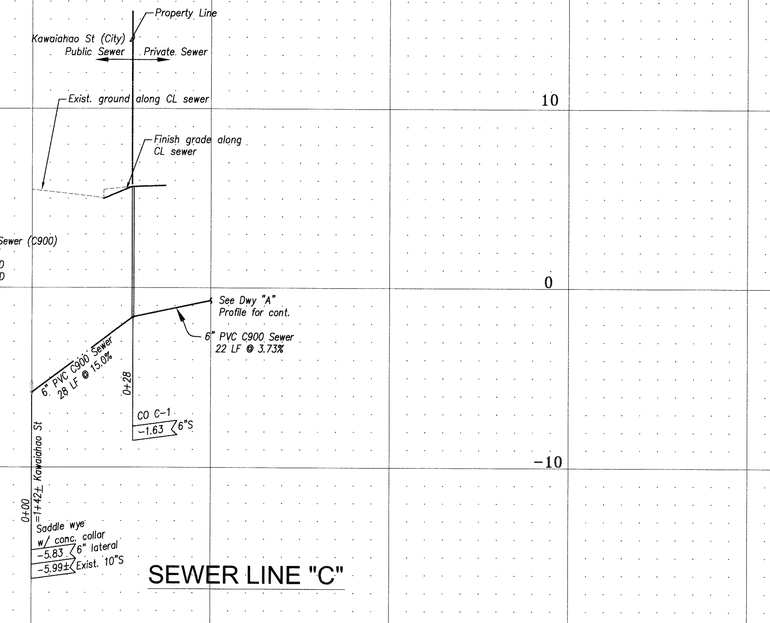

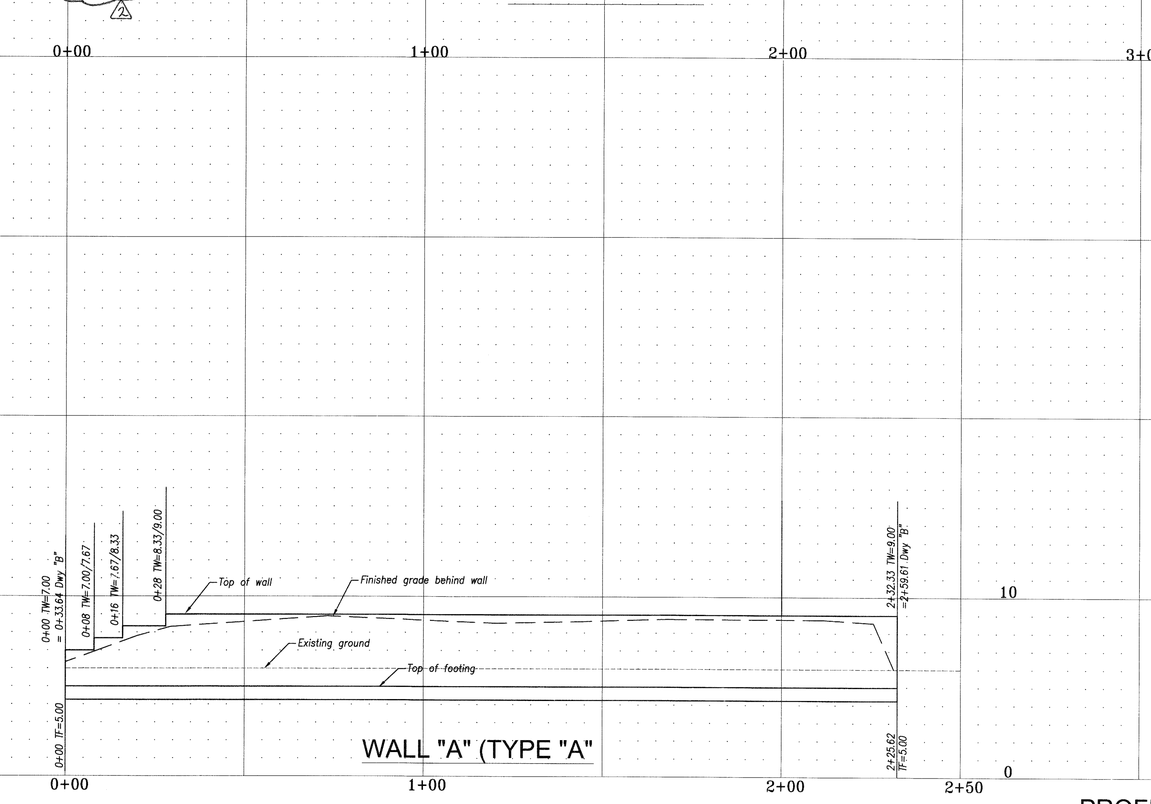

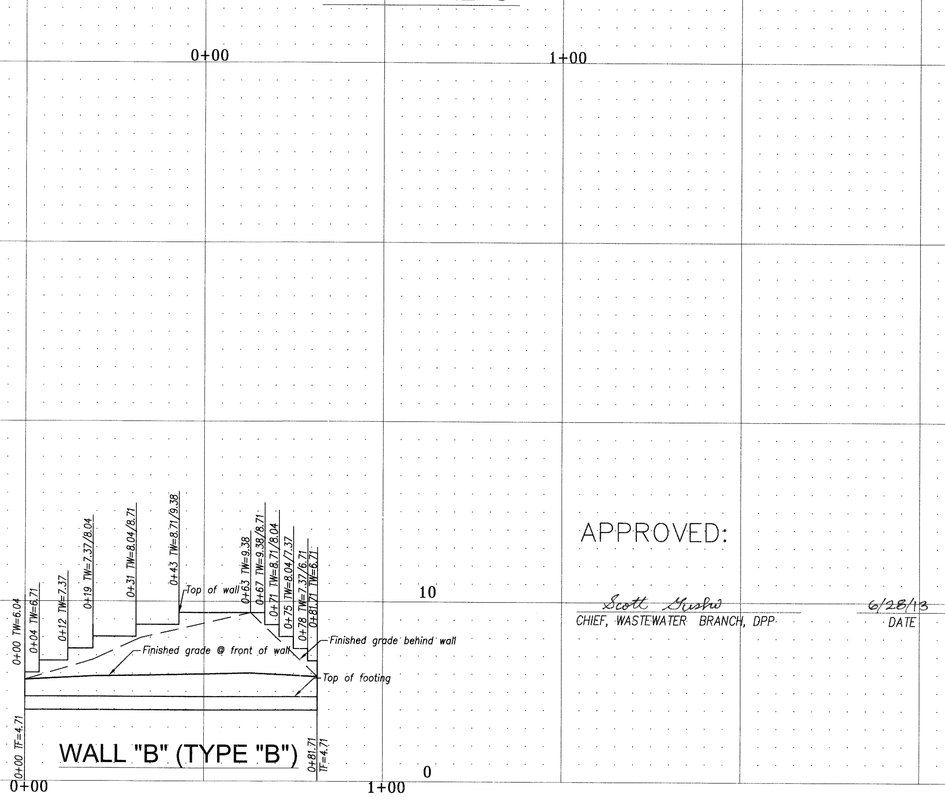

APPROVED:

Scott Yuahw
CHIEF, WASTEWATER BRANCH, DPP

6/28/13
DATE

PROFILES -2

Horiz. 20 10 0 20 40
Vert. 0 5
Scale in Feet

REVISIONS

NO.	DATE	
1	9/9/13	Changed "Exist. 8x4 Box Drain" to "Exist. 8x4 Box Drain" per DEI
2	9/9/13	Changed "Exist. 8x4 Box Drain" to "Exist. 8x4 Box Drain" per DEI

DAVID B. BILLS
LICENSED PROFESSIONAL ENGINEER
No. 4516-C
HAWAII, U.S.A.
Exp. 4/30/14

THIS PROJECT WAS PREPARED BY ME OR UNDER MY SUPERVISION AND I ACCEPT RESPONSIBILITY FOR THE PROJECT WILL BE UNDER MY OBSERVATION

KAKAAKO WORKFORCE HOUSING PER
SUBCHAPTER 4 OF 2011 MAUKA PLAN AND RULES
801 SOUTH STREET
HONOLULU, HAWAII
TMK: (1) 2-1-47: 3 & 4

PROFILES - 2

KAZU YATO, AIA & ASSOCIATES, INC.
2053 DOMINION TERRACE
HONOLULU, HI 96822
TEL: (808) 945-0040
FAX: (808) 945-0041

DATE: MAY 2013
DRAWN: RE
CHECK: DB
FILE:

SHEET
C-9

Wed, 01 May 2013 - 5:43pm
C:\Users\Duby\Documents\KL_PROJ\451-00 ADHERITOSH BLDG\CONST PLANS\451-00 C-8_9 Profiles 1_2.dwg

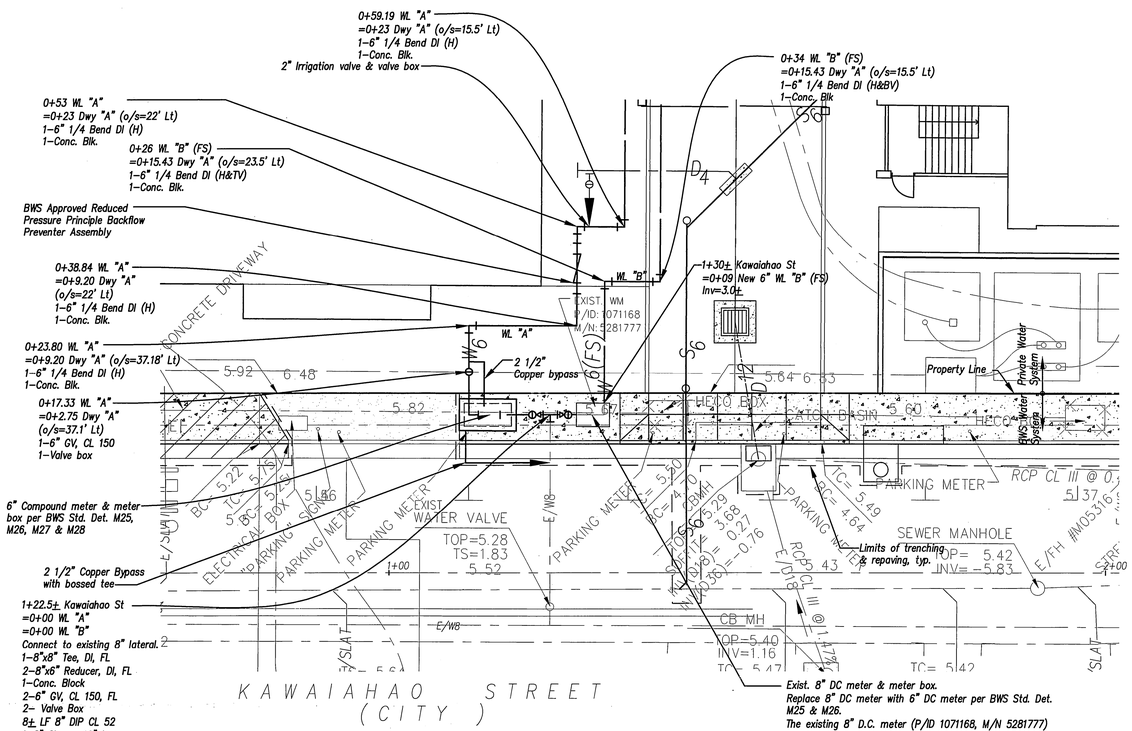

WATER LINE "A" & "B" LAYOUTS

Scale: 1"=10'

Note: Contractor shall verify adequacy of space to install all fittings as shown.

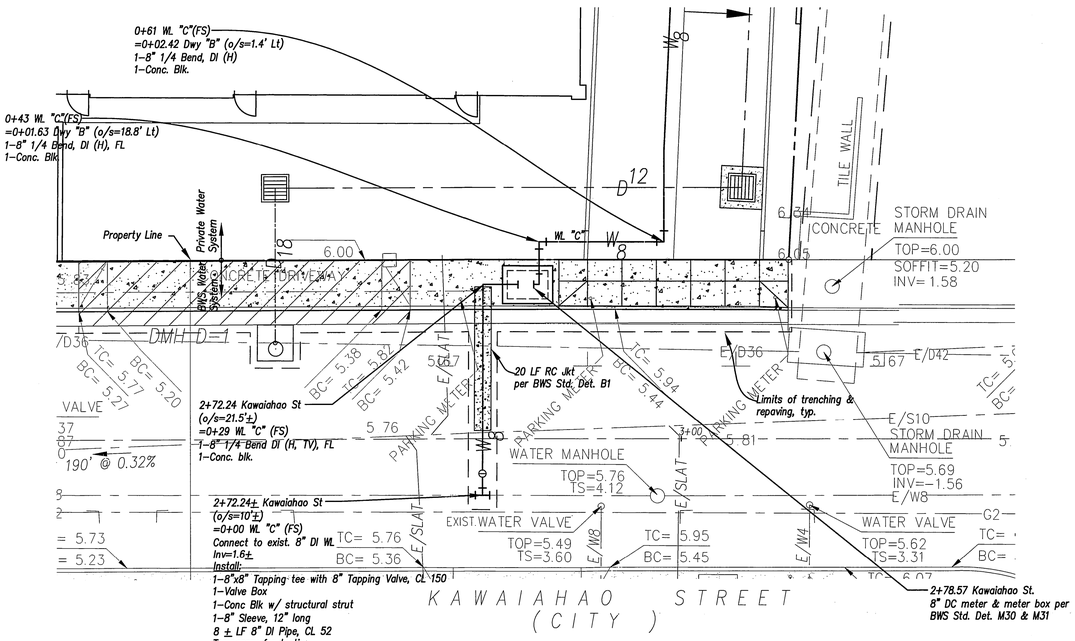

WATER LINE "C" LAYOUT

Scale: 1"=10'

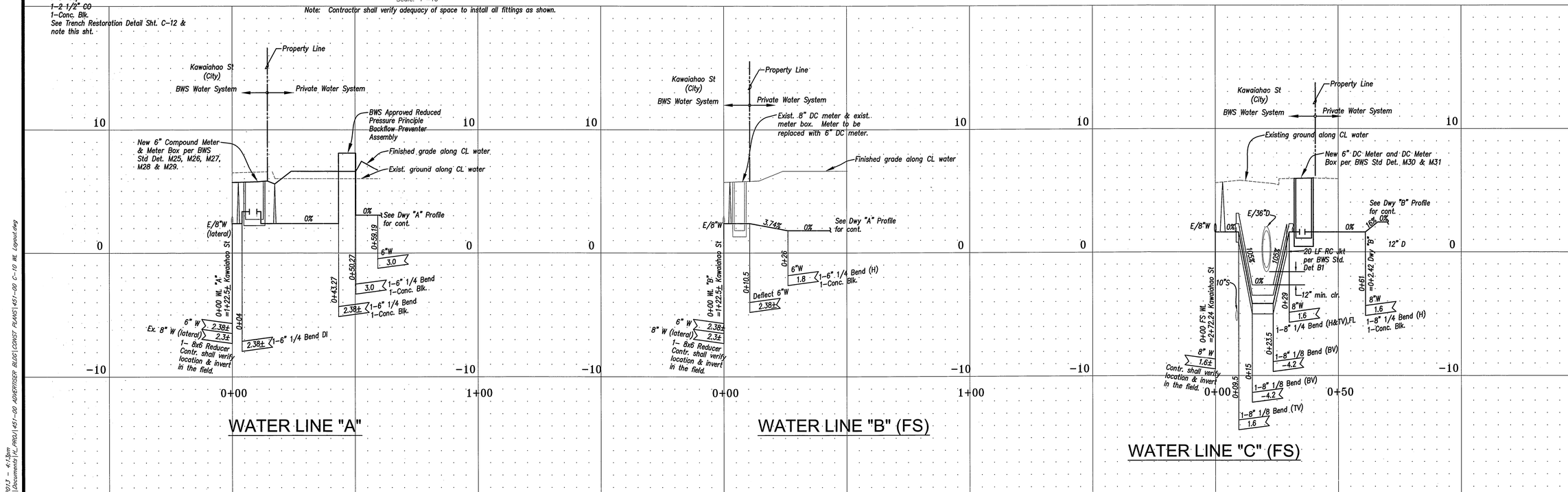

WATER LINE PROFILES

Horiz. 20 10 0 20 40
Vert. 3 2 0 4 8

Scale: Horiz 1"=20'
Vert 1"=4'

APPROVED:

MANAGER & CHIEF ENGINEER, BWS (FOR WORK AFFECTING BWS FACILITIES IN CITY/STATE RIGHT-OF-WAY AND BWS EASEMENTS ONLY)

DATE 6-25-2013

REVISIONS

NO.	DATE
.	.

DAVID B. BILLS
LICENSED PROFESSIONAL ENGINEER
No. 4516-C
HAWAII, U.S.A.
Exp. 4/30/14

THIS PROJECT WAS PREPARED BY ME OR UNDER MY SUPERVISION AND CONFORMS TO BWS STDS. PROJECT WILL BE UNDER MY OBSERVATION

KAKAAKO WORKFORCE HOUSING
SUBCHAPTER 4 OF 2011 MAUKA PLAN AND RULES
801 SOUTH STREET
HONOLULU, HAWAII
TMK: (1) 2-1-47: 3 & 4

WATER LINE LAYOUTS & PROFILES

KAZU YATO, AIA & ASSOCIATES, INC.
2333 ROUNDTOP TERRACE
HONOLULU, HI 96822
TEL: (808) 595-0240
FAX: (808) 845-0941

DATE MAY 2013
DRAWN RE
CHECK DB
FILE

SHEET

C-10

Thu, 16 May 2013 - 4:15pm
C:\Users\Julie\Documents\KL_PROJ\431-00 ADHERTISER BLDG\CONST PLANS\431-00 C-10 WL Layout.dwg

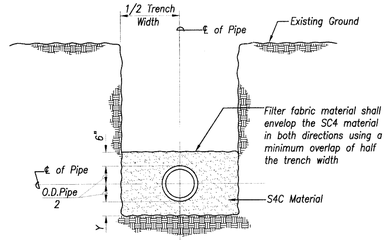

SECTION "C-C"

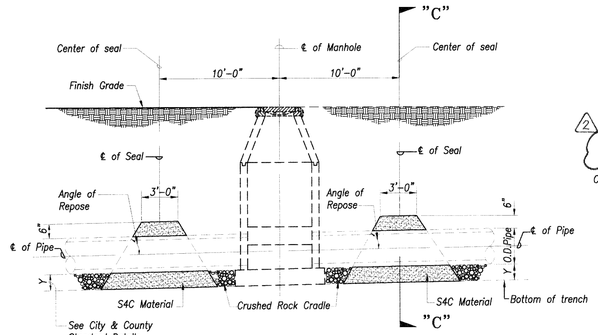

NOTES:
1. Seals shall be placed 10 ft. upstream and downstream from each manhole
2. The Contractor shall compact S4C material by ponding and draining. Upon draining, a vibratory machine shall be used until no visible evidence of further consolidation exists.
3. Seals shall not be paid for separately but shall be considered incidental to crushed rock cradle.

SEAL DETAIL

Not to Scale

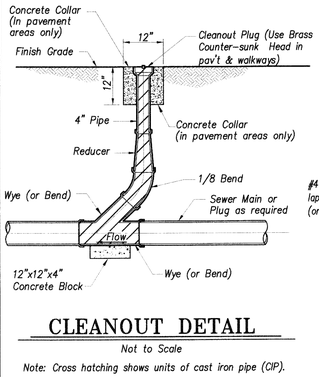

CLEANOUT DETAIL

Not to Scale

Note: Cross hatching shows units of cast iron pipe (CIP).

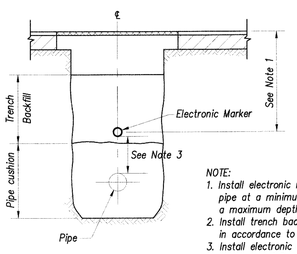

SECTION

NOTE:
1. Install electronic marker over center line of pipe at a minimum depth of 2 feet and a maximum depth of 3 feet from finish grade.
2. Install trench backfill and pipe cushion material in accordance to the plans and specifications.
3. Install electronic marker at a minimum clearance of 6-inches above the pipe or concrete jacket.

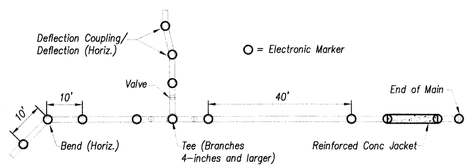

○ = Electronic Marker

PLAN

TYPICAL ELECTRONIC MARKER INSTALLATION DETAIL

Not to Scale

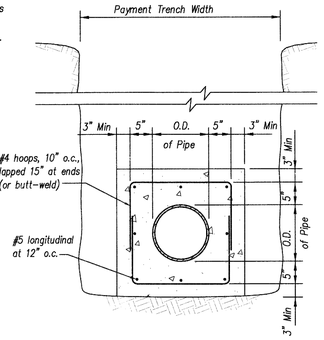

CONCRETE JACKET DETAIL FOR PIPES >12"

Scale: 3/4" = 1'-0"

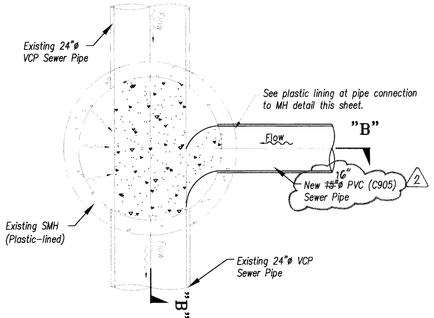

PLAN

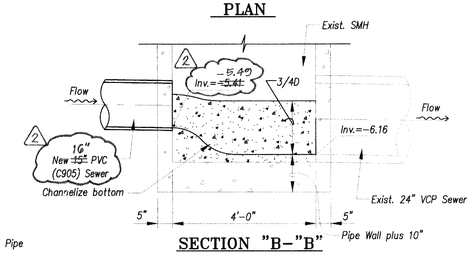

SECTION "B-"B"

CONNECTION TO EXIST SMH AND CHANNELIZATION DETAIL

Scale: 1/2" = 1'-0"

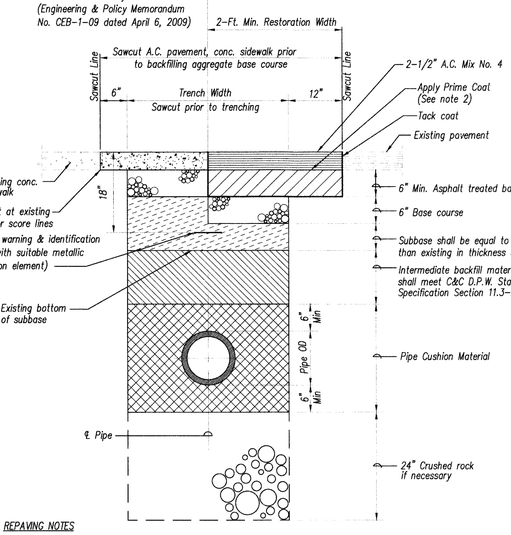

REPAVING NOTES

1. Pavement structure shall be equal to or better than existing in thickness and quality.
2. For road grades 0% to 7.99% prime coat is not required.
3. All disturbed pavement markings shall be replaced and all required utility adjustments such as manhole covers etc. shall be done by the Contractor.
4. Length of repaired trench shall be repaved two feet in added length to each end of trench.

TYPICAL SEWER TRENCH DETAIL

Scale: 3/4" = 1'-0"

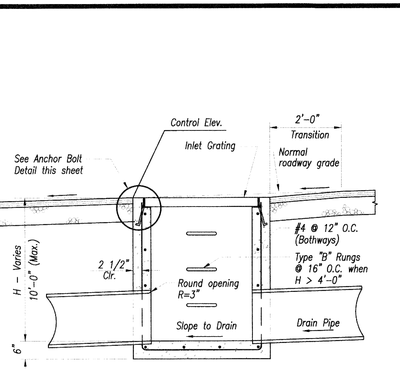

SECTION "D-D"

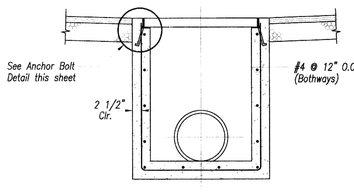

SECTION "E-E"

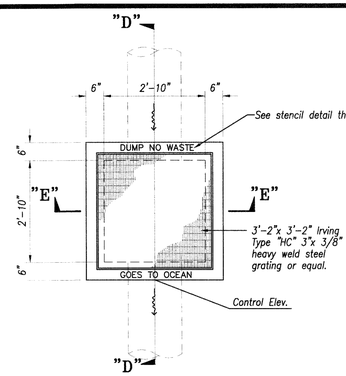

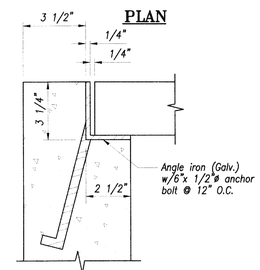

PLAN

ANCHOR BOLT DETAIL

Not to Scale

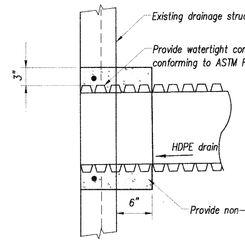

SECTION "F-F"

Not to Scale

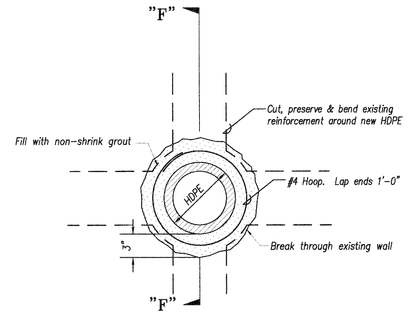

DRAIN CONNECTION DETAIL (PRIVATE)

Not to Scale

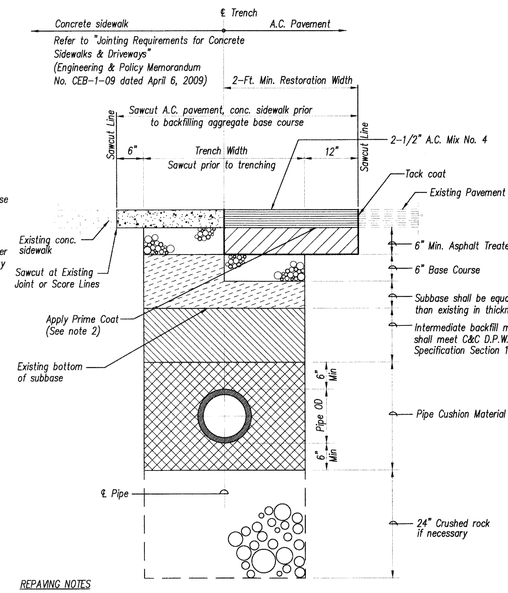

REPAVING NOTES

1. Pavement structure shall be equal to or better than existing in thickness and quality.
2. For road grades 0% to 7.99% prime coat is not required.
3. All disturbed pavement markings shall be replaced and all required utility adjustments such as manhole covers etc. shall be done by the Contractor.
4. Length of repaired trench shall be repaved two feet in added length to each end of trench.

TYPICAL TRENCH RESTORATION DETAIL FOR CITY STREETS

Scale: 3/4" = 1'-0"

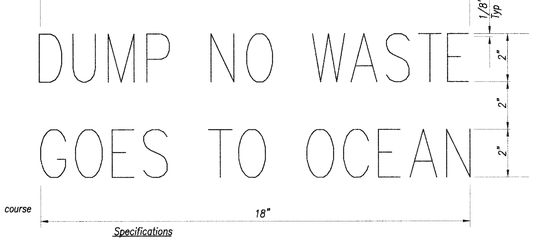

Specifications

Material: Aluminum alloy (cast aluminum), lead, or equal

Lettering: Height of letters shall be 2" high and 1/8" wide. The under side of all lettering shall be V-shaped.

Placement: The stencil shall be centered on the top deck of the catch basin and shall be a minimum of 8" away from the front face of the inlet. For grated drain inlet only, see inlet detail for location.

Impression: The stencil shall be pressed 1/4" into the green concrete when the inlet is made.

STENCIL DETAIL FOR DRAIN INLET

Not to Scale

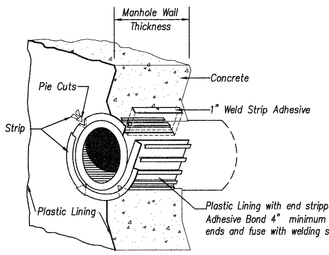

PLASTIC LINING AT PIPE CONNECTION TO MANHOLE

Not to Scale

APPROVED:

FOR MANAGER & CHIEF ENGINEER, BWS — DATE 6-28-2013
(FOR WORK AFFECTING BWS FACILITIES IN CITY/STATE RIGHT-OF-WAY AND BWS EASEMENTS ONLY)

Scott Grosbe — CHIEF, WASTEWATER BRANCH, DPP — 6/28/13 DATE

Melvin Takahara — for CHIEF, CIVIL ENGINEERING BRANCH, DPP — 7/17/13 DATE

REVISIONS: 1. 12-15 Size 4"dm 18"ø 15" 2. 12-15 Size 4"dm 18"ø 15"
DATE: 9/9/13
NO. 1 2

DAVID B. BILLS, LICENSED PROFESSIONAL ENGINEER, No. 4516-C, HAWAII, U.S.A. Exp. 4/30/14

THIS PROJECT WAS PREPARED BY ME OR UNDER MY SUPERVISION AND I ACKNOWLEDGE THAT THIS PROJECT WILL BE UNDER MY OBSERVATION

KAZU YATO, AIA & ASSOCIATES, INC.
2053 KUALIOPUO TERRACE HONOLULU, HI 96822
TEL: (808) 945-0540 FAX: (808) 945-0545

DATE: MAY 2013 | DRAWN: RE | CHECK: DB | FILE:

KAKAAKO WORKFORCE HOUSING PER
SUBCHAPTER 4 OF 2011 MAUKA PLAN AND RULES
801 SOUTH STREET
HONOLULU, HAWAII
TMK: (1) 2-1-47: 3 & 4

MISCELLANEOUS DETAILS - 1

SHEET C-11

Wed, 01 May 2013 - 5:46pm
C:\Users\User\Documents\FileProfiles\451-00 ADHERTISER BLDP\CONST PLANS\451-00 C-11 Misc Details 1.dwg

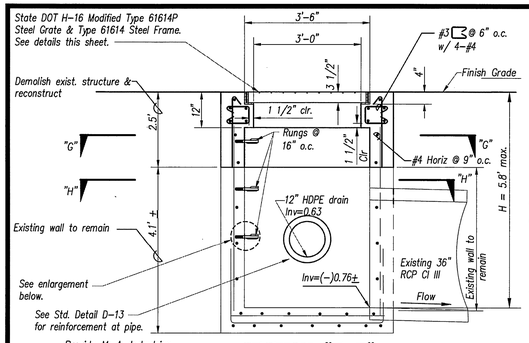

SECTION "F-F"

Provide M. A. Industries PS1-PF-DF Co-Polymer Manhole Steps. Drill 1" diameter hole, 10" o.c., 3-3/4" deep. Install per manufacturer's recommendations.

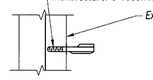

ENLARGEMENT

Not to Scale

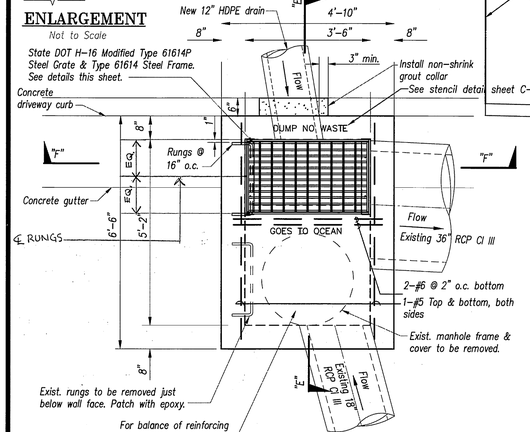

PLAN

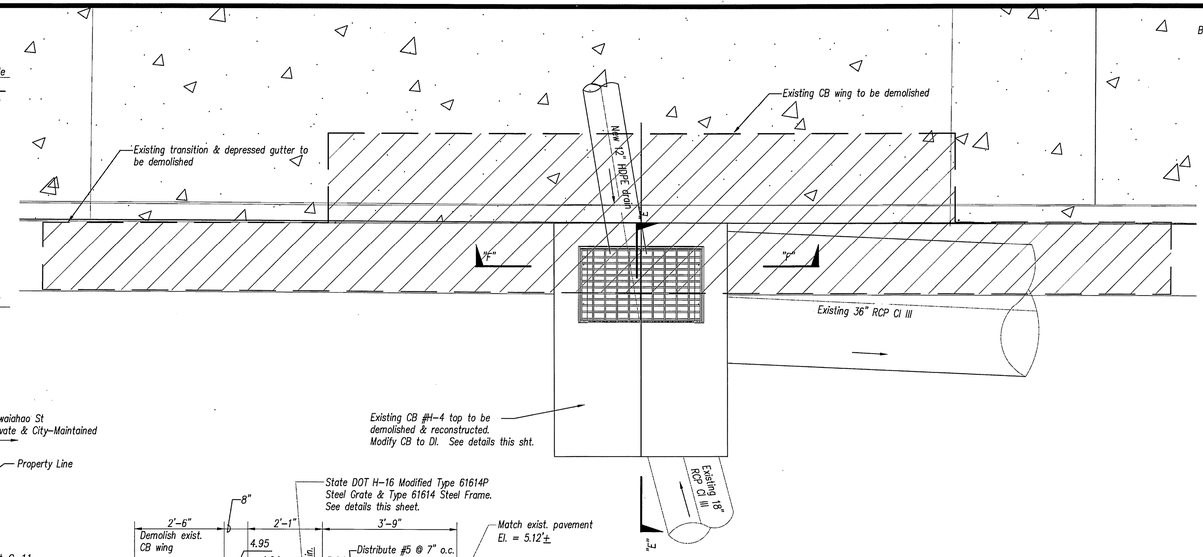

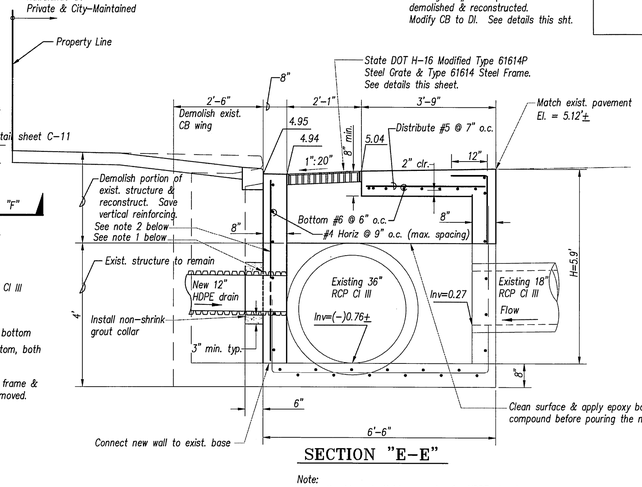

SECTION "E-E"

Note:
1. Provide watertight connector for HDPE pipe to manhole conforming to ASTM F2510/F2510M
2. Save reinforcing from invert slab & adjoining walls.

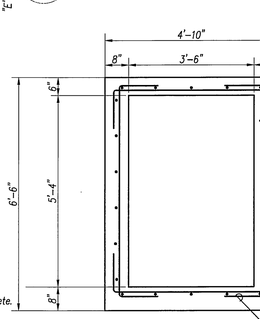

SECTION "G-G"

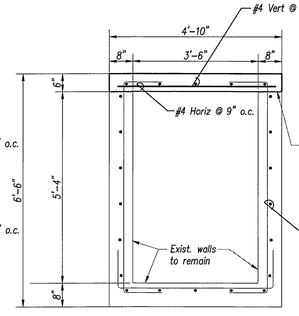

SECTION "H-H"

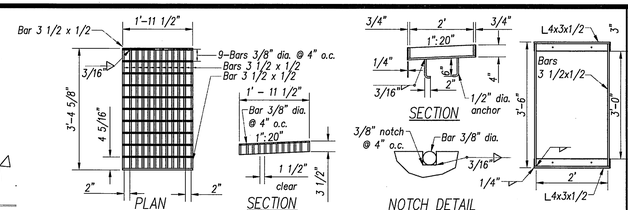

STEEL GRATE & FRAME DETAILS

Not to scale

Notes:
1. Grate is State DOT Type 61614P & frame is Type 61614, with slope revised as shown.
2. All welds 3/8" unless otherwise noted.
3. Grates & frames shall be zinc coated after fabrication.
4. Anchors shall be ASTM A 307 and zinc coated.

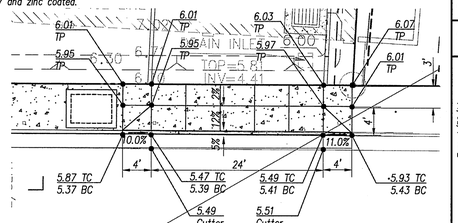

DRIVEWAY "B" APRON DETAIL

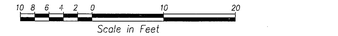

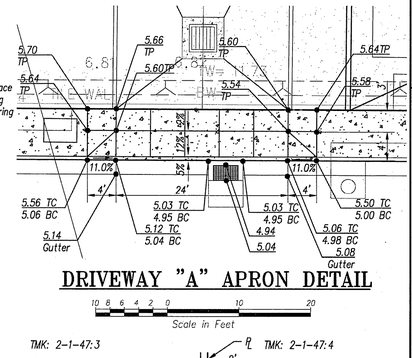

DRIVEWAY "A" APRON DETAIL

CB MODIFICATION DETAILS

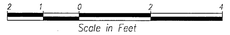

DRAINAGE STRUCTURE NOTES

1. All work shall conform to the "Standard Specifications for Public Works Construction" (latest).
2. All concrete shall be Class AAA, in accordance with the Standard Specifications.
3. All reinforcing steel shall conform to ASTM A615 Grade 60.
4. Minimum cover in inches for rebars for cast-in-place concrete:

Concrete cast against earth	3"
Formed concrete exposed to earth or weather	2"

5. Unless otherwise noted, splices, laps, dowel extensions and embedments shall be 45 bar diameters minimum.
6. All reinforcing bars marked 'Cont.' or 'Temp.' shall be lapped 45 bar diameters minimum.
7. Stagger all splices where possible.
8. Rebars shall be supported, bent and placed as per "Manual of Standard Practice for Detailing Concrete Structures" ACI 315 (latest).
9. At time concrete is placed, reinforcing shall be free from mud, oil, laitance or other substances adversely affecting bond capacity.
10. Reinforcement, anchor bolts, dowels and all other embedded items shall be positively secured before pouring.
11. Rungs shall be tested per AASHTO M199 (ASTM C478). Contractor shall submit the results of the pullout and vertical load tests to the engineer of record for review & acceptance. The engineer of record shall attest that the test results meet the minimum requirements of AASHTO M199 (ASTM C478) & will provide written documentation to the Dept. of Planning & Permitting Civil Engineering Branch (DPP-CEB).

DESIGN CRITERIA

1. AASHTO LRFD Bridge Design Specifications Fourth Edition 2007:
   Live load: HI-93 (in traffic areas)
   250 psf (non-traffic areas)
   60 pcf active pressure (top restrained)

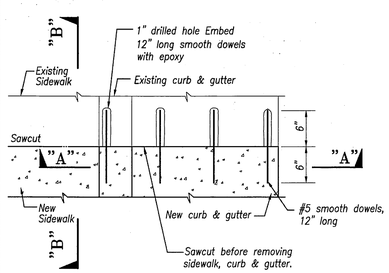

PLAN

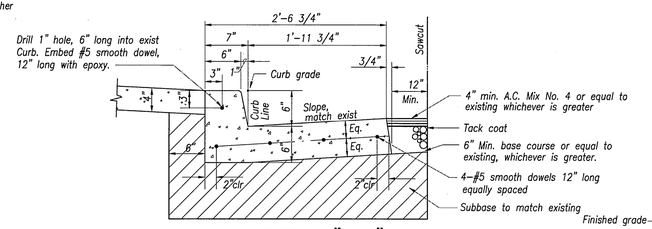

SECTION "A-A"

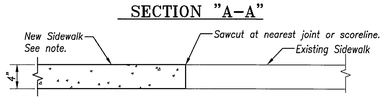

Note: Contractor shall comply with City's jointing policy dated 4/6/09 for new sidewalk.

SECTION "B-B"

SIDEWALK, CURB & GUTTER CONNECTION DETAIL

Not to scale

SECTION "D-D"

Scale: 1" = 20'-0"

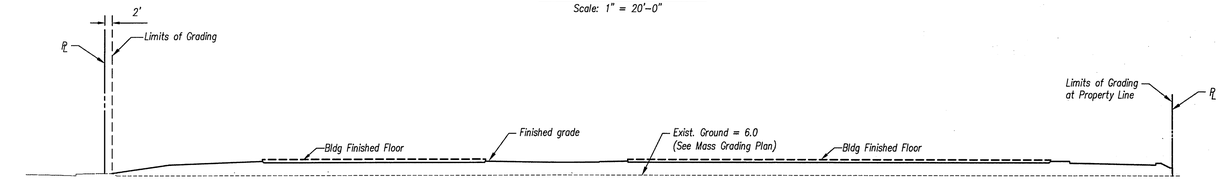

SECTION "C-C"

Scale: 1" = 20'-0"

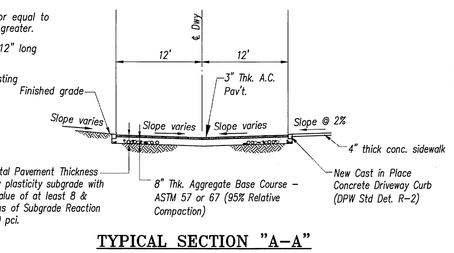

TYPICAL SECTION "A-A"

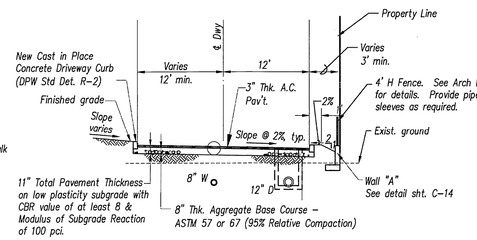

TYPICAL SECTION "B-B"

10 8 6 4 2 0 10 20
Scale in Feet

THIS WORK WAS PREPARED BY ME OR UNDER MY SUPERVISION AND CONSTRUCTION OF THIS PROJECT WILL BE UNDER MY OBSERVATION
Exp. 4-30-14
THOMAS Y. TAMMURA LICENSED PROFESSIONAL ENGINEER No. 4926-S HAWAII, U.S.A.

APPROVED:

CHIEF, CIVIL ENGINEERING BRANCH, DPP

7/17/13
DATE

REVISIONS | NO. | DATE

DAVID B. BILLS LICENSED PROFESSIONAL ENGINEER No. 4516-C HAWAII, U.S.A.
Exp: 4/30/14

THIS PROJECT WAS PREPARED BY ME OR UNDER MY SUPERVISION AND CONSTRUCTION OF THIS PROJECT WILL BE UNDER MY OBSERVATION

KAKAAKO WORKFORCE HOUSING PER
SUBCHAPTER 4 OF 2011 MAUKA PLAN AND RULES
801 SOUTH STREET
HONOLULU, HAWAII
TMK: (1) 2-1-47: 3 & 4

MISCELLANEOUS DETAILS - 2

KAZU YATO, AIA & ASSOCIATES,INC.
2033 ROUNDTOP TERRACE
HONOLULU, HI 96822
TEL (808) 946-0040
FAX (808) 946-0041

DATE JULY 2013 | DRAWN RE | CHECK | DB | FILE

SHEET

C-12

Thu, 11 Jul 2013 - 10:23am
C:\Users\kuke\Documents\Kz_PROJ\431-00 ADHERNSEN BLDG\CONST PLANS\431-00 C-12 Misc Details 2.dwg

GENERAL NOTES

1. ALL WORK SHALL CONFORM TO THE BUILDING CODE OF THE CITY AND COUNTY OF HONOLULU (LATEST).

2. ALL MATERIALS AND WORKMANSHIP SHALL CONFORM TO THE DRAWINGS AND THE SPECIFICATIONS.

3. THE GENERAL NOTES AND TYPICAL DETAILS SHALL APPLY UNLESS OTHERWISE SHOWN.

4. DIMENSIONS SHALL TAKE PRECEDENCE OVER SCALES SHOWN ON DRAWINGS.

5. DRAWINGS INDICATE GENERAL AND TYPICAL DETAILS OF CONSTRUCTION. WHERE CONDITIONS ARE NOT SPECIFICALLY INDICATED BUT ARE OF SIMILAR CHARACTER TO DETAILS SHOWN, SIMILAR DETAILS OF CONSTRUCTION SHALL BE USED, SUBJECT TO REVIEW BY THE ENGINEER.

6. CIVIL PLANS ARE CONSIDERED A PART OF THE STRUCTURAL DESIGN DRAWINGS AND ARE TO BE USED TO DEFINE DETAIL CONFIGURATIONS INCLUDING, BUT NOT LIMITED TO RELATIVE LOCATION OF MEMBERS, ELEVATIONS, LOCATION OF ALL OPENINGS, ETC.

7. SEE CIVIL DRAWINGS FOR SIZE AND LOCATION OF RETAINING WALLS.

8. ALL INFORMATION SHOWN ON THE DRAWINGS RELATIVE TO EXISTING CONDITIONS IS GIVEN AS THE BEST PRESENT KNOWLEDGE, BUT WITHOUT GUARANTEE OF ACCURACY. THE CONTRACTOR SHALL VERIFY ALL DIMENSIONS AND CONDITIONS PRIOR TO THE START OF THE JOB AND NOTIFY ALL DISCREPANCIES TO THE ENGINEER.

9. ALL OMISSIONS OR CONFLICTS BETWEEN THE VARIOUS ELEMENTS OF THE WORKING DRAWINGS AND/OR SPECIFICATIONS SHALL BE BROUGHT TO THE ATTENTION OF THE ENGINEER BEFORE PROCEEDING WITH ANY WORK SO INVOLVED.

10. DURING THE CONSTRUCTION PERIOD THE CONTRACTOR SHALL BE RESPONSIBLE FOR THE SAFETY OF THE BUILDING AND THE PROTECTION OF ADJACENT PROPERTIES, STRUCTURES, STREETS AND UTILITIES FROM DAMAGE. THE CONTRACTOR SHALL PROVIDE ADEQUATE SHORING, BRACING AND GUYS IN ACCORDANCE WITH ALL NATIONAL, STATE AND LOCAL SAFETY ORDINANCES.

11. ALL ERECTION PROCEDURES SHALL CONFORM TO OSHA STANDARDS. ANY DEVIATION MUST BE APPROVED BY OSHA PRIOR TO ERECTION.

12. THE CONTRACTOR SHALL TAKE ALL STEPS NECESSARY TO PROPERLY ALIGN THE STRUCTURE.

13. ALL REQUESTS BY THE CONTRACTOR TO CHANGE WHAT IS SHOWN IN THE CONTRACT DOCUMENTS MUST BE SUBMITTED IN WRITING TO THE ENGINEER.

14. THE CONTRACTOR SHALL NOTIFY TANIMURA & ASSOCIATES (PH. 536-7692) TWO (2) WORKING DAYS PRIOR TO BEGINNING ANY WORK WHICH WILL CONCEAL STRUCTURAL ELEMENT SUCH AS POURING CONCRETE (CONCEALING REINFORCING) OR SHEATHING WALLS (CONCEALING HOLD DOWN ANCHORS).

RETAINING WALLS

1. RETAINING WALL DESIGN IS BASED ON GEOTECHNICAL ENGINEERING SOILS REPORT BY AECOM ENTITLED "REPORT OF GEOTECHNICAL EXPLORATION WORKFORCE HOUSING DEVELOPMENT, HONOLULU, HAWAII" DATED JUNE 4, 2012, AS AMENDED. A COPY OF THIS REPORT SHALL KEPT ON THE JOBSITE AT ALL TIMES. IT SHALL BE USED AS A GUIDE TO IN PREPARING FOOTING TRENCHES, PLACING AND COMPACTING FILL MATERIAL. BUT THIS REPORT SHALL NOT SUPERCEDE THE CONTRACT DRAWINGS.

2. THE UPPER 12 INCHES OF BACKFILL BEHIND WALLS SHALL CONSIST OF A LOW PERMEABLE, COHESIVE SOIL TO REDUCE SEEPAGE OF SURFACE WATER BEHIND WALLS. THIS SAME LOW PERMEABLE MATERIAL SHALL BE PLACED IN A CONTINUOUS SECTION BELOW THE BOTTOM OF THE DRAIN PIPE.

3. WEEPHOLES, 3 INCHES IN DIAMETER, SHALL BE PLACED AT CORNERS AND SPACED NOT MORE THAN 5 FEET ON CENTER HORIZONTALLY ALONG WALLS. A 12" THICK INCH MINIMUM SECTION OF CONTINUOUS DRAIN ROCK SHALL BE PLACED ALONG THE ENTIRE LENGTH OF WALLS CONNECTING THE WEEPHOLES.

4. DRAIN ROCK SHALL BE WRAPPED IN A GEOTEXTILE FILTER FABRIC SUCH AS SUPAC 4NP AND SHALL CONFORM TO THE FOLLOWING GRADATION:

SIEVE SIZE	% PASSING BY DRY WEIGHT
1-1/2 INCH	90 - 100
3/4 INCH	50 - 100
NO. 4	0 - 50
NO. 200	0 - 5

STANDARD SIZE AGGREGATES NO. 6, 57 AND 67 AND 1-1/2 INCH FILTER MATERIALS SHOULD SATISFY THIS GRADATION REQUIREMENT.

5. AS AN ALTERNATIVE TO THE DRAIN ROCK, A PREFABRICATED DRAINAGE PRODUCT SUCH AS "MIRADRAIN" OR "ENKADRAIN", MAY BE USED.

6. BACKFILL SHALL CONSIST OF WELL GRADED, NON-EXPANSIVE MATERIALS LESS THAN 3 INCHES IN GREATEST DIMENSION WITH BETWEEN 10% TO 30% OF SOIL BY WEIGHT SHALL PASS THROUGH THE #200 SIEVE. COMPACTION SHALL NOT EXCEED 90% RELATIVE COMPACTION.

7. DAMP PROOFING SHALL BE APPLIED AT THE WALL/FOOTING CONSTRUCTION JOINT. FLASHING COMPOUND SHALL EXTEND 6 INCHES BEYOND EITHER SIDE OF THE JOINT. CONTRACTOR SHALL USE EMULSIFIED ASPHALT BY THE EUCLID CHEMICAL COMPANY OR APPROVED EQUIVALENT.

8. THE WALL FACE ON BACKFILL SIDE SHALL BE COATED WITH DAMP PROOFING. CONTRACTOR SHALL USE EUCOSEAL BY THE EUCLID CHEMICAL COMPANY OR APPROVED EQUIVALENT.

9. BACKFILL SHALL BE PLACED 21 DAYS AFTER GROUTING THE WALL OR UNTIL THE GROUT HAS ATTAINED A MINIMUM COMPRESSIVE STRENGTH OF 1875 PSI.

REINFORCED CONCRETE

1. ALL CONCRETE WORK SHALL CONFORM TO ACI 318-02.

2. ALL CONCRETE SHALL BE NORMAL WEIGHT (150 PCF) WITH AGGREGATES CONFORMING TO ASTM C-33. UNLESS OTHERWISE NOTED, THE COMPRESSIVE STRENGTHS OF CONCRETE AT 28 DAYS AND MAXIMUM AGGREGATE SIZES SHALL BE AS FOLLOWS:

	STRENGTH	AGGREGATE SIZE
FOOTING & SLAB ON GRADE	3000 PSI	1-1/2"
OTHERS	3000 PSI	3/4"

3. MAXIMUM WATER-CEMENT RATIO SHALL NOT EXCEED 0.55.

4. ALL REINFORCING STEEL EXCEPT TIES AND STIRRUPS SHALL CONFORM TO ASTM A615 GRADE 60. TIES, STIRRUPS AND REBARS TO BE WELDED SHALL BE ASTM A615 GRADE 40.

5. UNLESS OTHERWISE NOTED, SPLICES, LAPS, DOWEL EXTENSIONS AND EMBEDMENTS SHALL BE 45 BAR DIAMETERS MINIMUM, BUT NOT LESS THAN 2'-0".

6. ALL REINFORCING BARS MARKED CONTINUOUS (CONT.) ON THE PLANS SHALL BE LAPPED 45 BAR DIAMETERS MINIMUM BUT NOT LESS THAN 2'-0".

7. STAGGER ALL SPLICES WHERE POSSIBLE.

8. ALL WELDING OF REINFORCING SHALL CONFORM TO "STRUCTURAL WELDING CODE - REINFORCING STEEL" (AWS D1.4).

9. REBARS SHALL BE SUPPORTED, BENT AND PLACED AS PER "MANUAL OF STANDARD PRACTICE FOR DETAILING CONCRETE STRUCTURES" ACI 315 (LATEST).

10. MINIMUM COVER IN INCHES FOR REBARS FOR CAST-IN-PLACE CONCRETE:

CONCRETE CAST AGAINST EARTH — 3"

FORMED CONCRETE EXPOSED TO EARTH OR WEATHER:
- #5 AND SMALLER — 1-1/2"
- #6 AND LARGER — 2"

11. WELDED WIRE FABRIC SHALL BE GALVANIZED AND CONFORM TO ASTM A-185.

12. UNLESS OTHERWISE SHOWN LAP OUTERMOST CROSS WIRES OF EACH SHEET OF WELDED WIRE FABRIC ONE SPACING OF CROSS WIRES PLUS 2" MINIMUM.

13. AT TIME CONCRETE IS PLACED, REINFORCING SHALL BE FREE FROM MUD, OIL, LAITANCE OR OTHER COATINGS ADVERSELY AFFECTING BOND CAPACITY.

14. REINFORCEMENT, ANCHOR BOLTS, DOWELS AND ALL OTHER EMBEDDED ITEMS SHALL BE POSITIVELY SECURED BEFORE POURING.

CONCRETE MASONRY - CMU

1. CONCRETE BLOCK, GRADE N-II UNITS CONFORMING TO ASTM C90-75.

2. MORTAR SHALL BE ONE OF THE FOLLOWING, PREPARED IN STRICT ACCORDANCE WITH THE MANUFACTURER'S INSTRUCTIONS:

2 SACKS PORTLAND CEMENT
1 7-POUND BAG 'EASY SPREAD' BY AMERICAN COLLOID CO.
8 CUBIC FEET MORTAR AGGREGATE

1 SACK PORTLAND CEMENT
3 OUNCES 'MRF' BY GIBCO
2-3/4 CUBIC FEET MORTAR AGGREGATE

3. GROUT, CONFORMING TO ASTM C476-83, MINIMUM COMPRESSIVE STRENGTH OF 2500 PSI AT 28 DAYS. MIX: 1 PART CEMENT, 3 PARTS SAND, 2 PARTS PEA GRAVEL, TO BE OF FLUID CONSISTENCY (9" MINIMUM SLUMP).

4. THE THICKNESS OF GROUT BETWEEN BLOCK UNITS AND REINFORCING STEEL SHALL BE NOT LESS THAN 1/2" ; BETWEEN PARALLEL REINFORCING BARS, NOT LESS THAN 3/4".

5. IF WORK IS STOPPED ONE (1) HOUR OR LONGER, PROVIDE HORIZONTAL CONSTRUCTION JOINTS BY STOPPING THE GROUT 1-1/2" BELOW THE TOP OF THE BLOCK.

6. ALL CELLS SHALL BE GROUTED SOLID. GROUT IN LIFTS NOT TO EXCEED 6'-0".

7. GROUT SHALL BE VIBRATED 3 TO 5 MINUTES AFTER POUR.

8. UNLESS NOTED OTHERWISE ALL WALLS SHALL BE CONSTRUCTED IN CONVENTIONAL RUNNING BOND.

9. PROVIDE CONTROL JOINTS AT THE FOLLOWING:
WALL HEIGHT CHANGES >2'-0"
WALL THICKNESS CHANGES (THOUGH NOT AT PILASTERS)
AT 60'-0" O.C. MAXIMUM

REINFORCING FOR CONCRETE MASONRY

1. ALL REINFORCING STEEL BARS (EXCEPT STIRRUPS AND TIES) SHALL CONFORM TO ASTM A615 GRADE 60. STIRRUPS AND TIES SHALL CONFORM TO ASTM A615 GRADE 40.

2. UNLESS OTHERWISE NOTED, SPLICES, LAPS, DOWEL EXTENSIONS AND EMBEDMENTS SHALL BE 45 BAR DIAMETERS.

3. WHEREVER POSSIBLE, BOND BEAMS OF INTERSECTING WALLS SHALL BE CONSTRUCTED AT THE SAME ELEVATION. WHERE BOND BEAMS OF INTERSECTING WALLS DO NOT MATCH, BOND BEAM REINFORCING SHALL BE EMBEDDED INTO THE INTERSECTING WALL A MINIMUM OF 45 BAR DIAMETERS AND GROUTED.

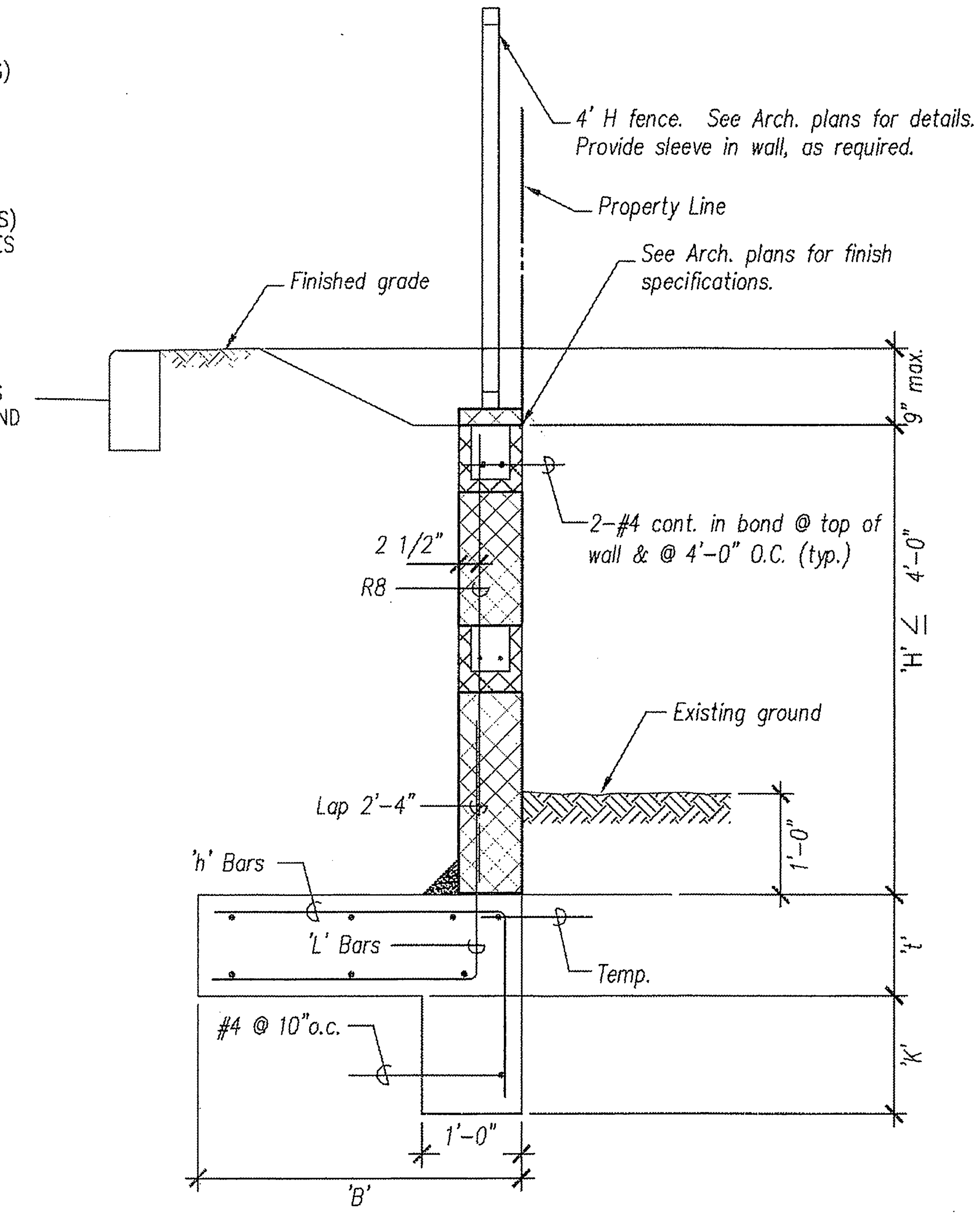

'H'≤ 4'-0"

RETAINING WALL (TYPE "A")

SC: 3/4" = 1'-0"

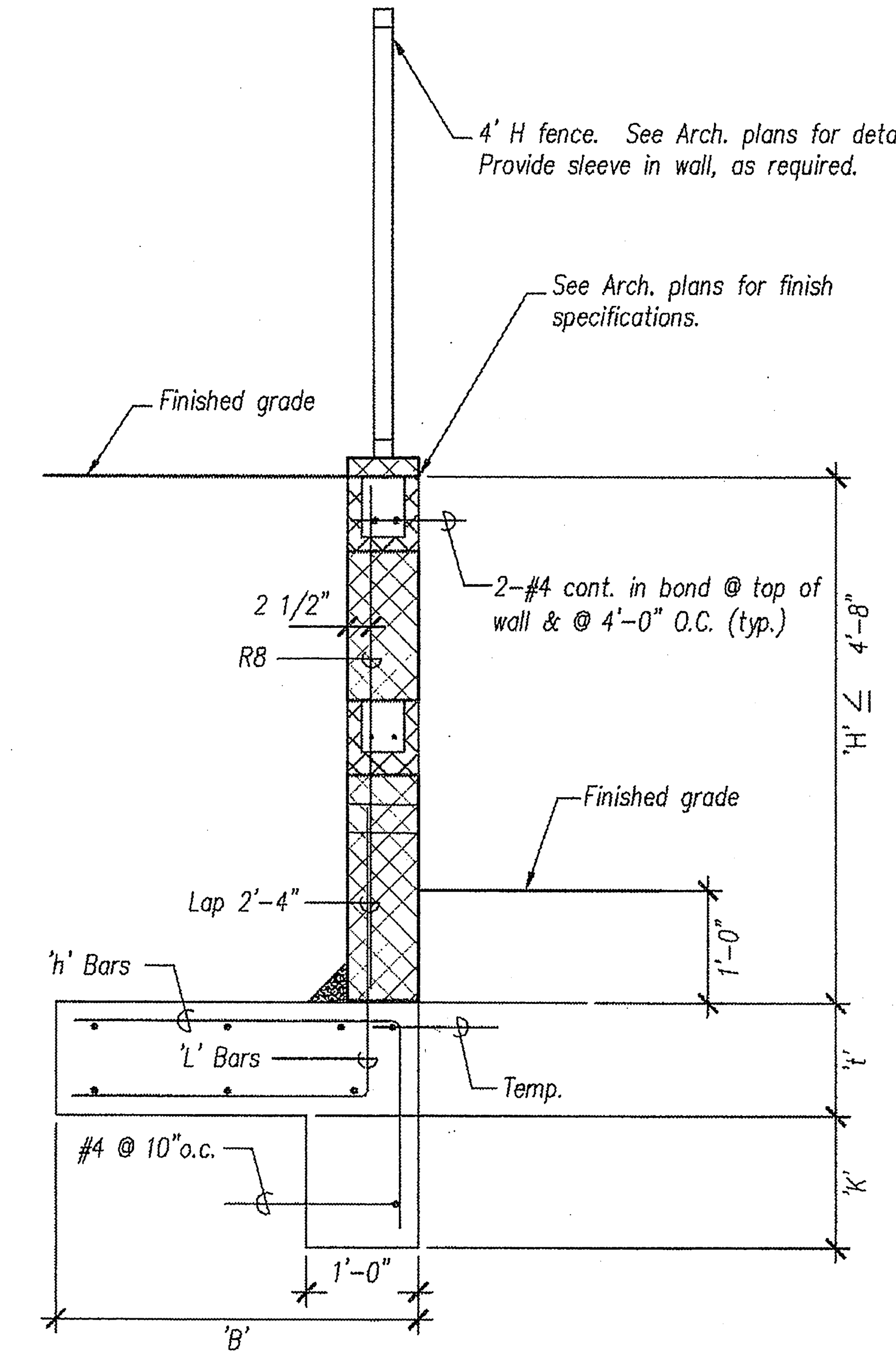

'H'≤ 4'-8"

RETAINING WALL (TYPE "B")

SC: 3/4" = 1'-0"

RETAINING WALL SCHEDULE

'H'	'B'	't'	'K'	'L' bars	'h' bars	'TEMP'	R8
≤ 4'-0"	4'-0"	12"	1'-3"	#4@ 8"o.c.	#4@ 9"o.c.	#4@ 9"o.c.	#4@ 16"o.c.
≤ 3'-4"	3'-8"	↓	1'-0"	#4@ 8"o.c.	↓	↓	↓
≤ 2'-8"	3'-0"	↓	0'-10"	#4@ 16"o.c.	↓	↓	↓

RETAINING WALL SCHEDULE

'H'	'B'	't'	'K'	'L' bars	'h' bars	'TEMP'	R8
≤ 4'-0"	2'-8"	12"	0'-8"	#4@ 16"o.c.	#4 @ 9"o.c.	#4 @ 9"o.c.	#4 @ 16"o.c.
≤ 3'-4"	2'-2"	↓	0'-6"	↓	↓	↓	↓
≤ 2'-8"	2'-0"	↓	0'-4"	↓	↓	↓	↓

REVISIONS | NO. | DATE

THOMAS Y. TANIMURA LICENSED PROFESSIONAL ENGINEER No. 4926-S HAWAII, U.S.A. Lic. Exp. 4-30-14

THIS WORK WAS PREPARED BY ME OR UNDER MY SUPERVISION AND CONSTRUCTION OF THIS PROJECT WILL BE UNDER MY OBSERVATION.

KAKAAKO WORKFORCE HOUSING PER SUBCHAPTER 4 OF 2011 MAUKA PLAN AND RULES

801 SOUTH STREET
HONOLULU, HAWAII

WALL NOTES & DETAILS

KAZU YATO, AIA & ASSOCIATES, INC.
2033 ROUNDTOP TERRACE HONOLULU, HI 96822
TEL: (808) 945-0040
FAX: (808) 945-0041

DATE FEB 2013 | DRAWN RE | CHECK DB | FILE

SHEET C-13

Fri, 15 Feb 2013 - 8:55pm
C:\Users\buhr\Documents\H_PROJ\451-00 ADVERTISER BLDG\CONST PLANS\451-00 C-13 Wall Details Notes.dwg

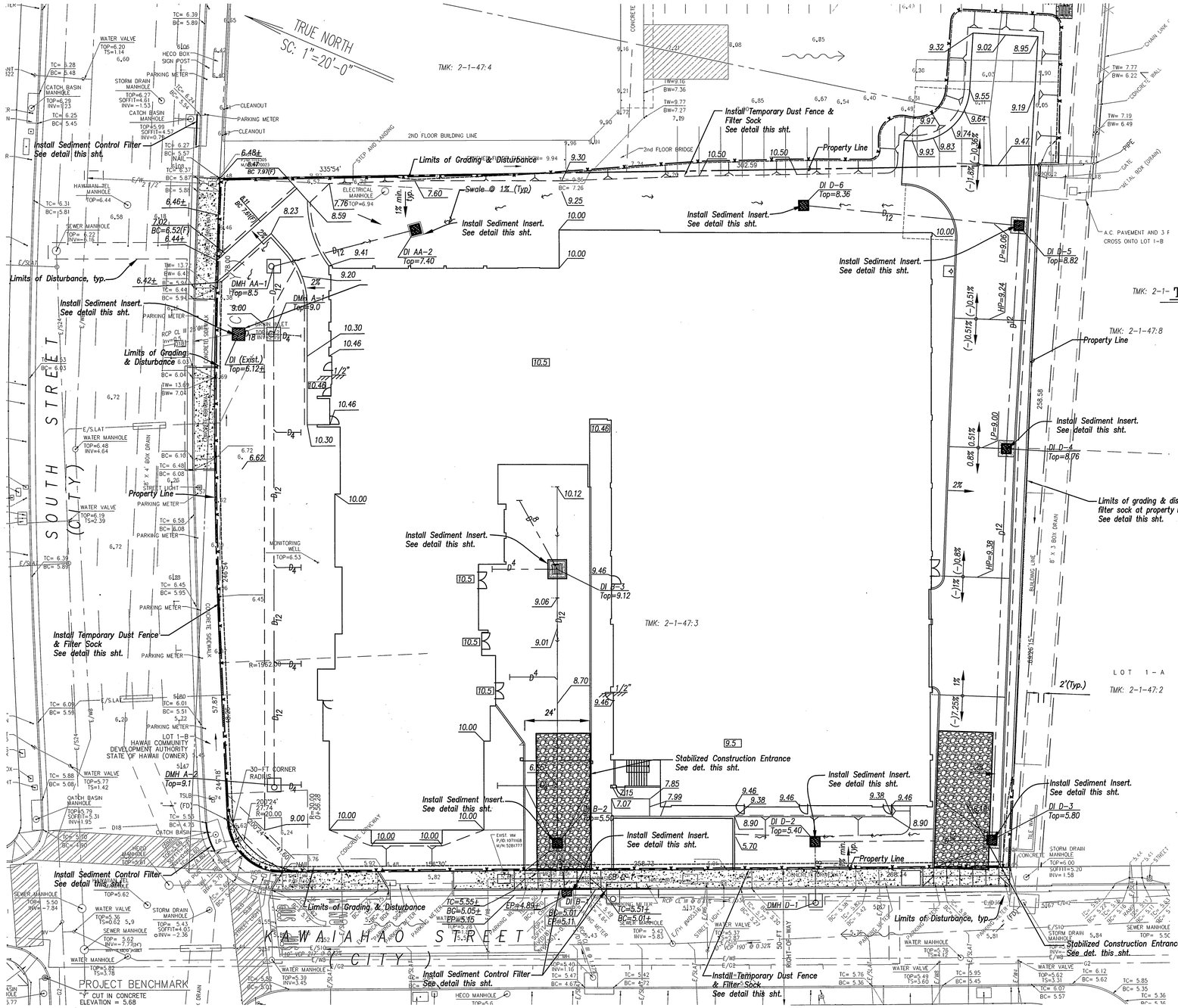
TRUE NORTH
SC: 1"=20'-0"
TMK: 2-1-47:4
TMK: 2-1-47:3
TMK: 2-1-47:8
TMK: 2-1-47:2
K A W A I A H A O S T R E E T
(C I T Y)
S O U T H S T R E E T
(C I T Y)
LOT 1-B
HAWAII COMMUNITY DEVELOPMENT AUTHORITY
STATE OF HAWAII (OWNER)
LOT 1-A
PROJECT BENCHMARK
"X" CUT IN CONCRETE
ELEVATION = 5.68
Limits of Disturbance, typ.
Limits of Grading & Disturbance
Limits of Grading & Disturbance
Property Line
Property Line
Property Line
Property Line
Install Sediment Control Filter See detail this sht.
Install Sediment Insert. See detail this sht.
Install Temporary Dust Fence & Filter Sock See detail this sht.
Install Temporary Dust Fence & Filter Sock See detail this sht.
Swale @ 1% (Typ.)
Stabilized Construction Entrance See det. this sht.
Limits of grading & disturbance & filter sock at property line. See detail this sht.
Limits of Disturbance, typ.
Stabilized Construction Entrance See det. this sht.
DMH AA-1 Top=8.5
DMH A-1 Top=9.0
DMH A-2 Top=9.1
DI AA-2 Top=7.40
DI (Exist.) Top=6.12±
DI B-1 Top=5.11
DI B-2 Top=5.50
DI B-3 Top=9.12
DI D-2 Top=5.40
DI D-3 Top=5.80
DI D-4 Top=8.76
DI D-5 Top=8.82
DI D-6 Top=8.36
DMH D-1
2nd FLOOR BUILDING LINE
2nd FLOOR BRIDGE
STEP AND LANDING
CONCRETE DRIVEWAY
CONCRETE RETAINING WALL
CHAIN LINK FENCE
CONCRETE WALL
A.C. PAVEMENT AND 3 F CROSS ONTO LOT 1-B
BUILDING LINE
50-FT RIGHT-OF-WAY
30-FT CORNER RADIUS
Install Sediment Insert. See detail this sht.
Stabilized Construction Entrance See det. this sht.
Install Sediment Control Filter See detail this sht.
Install Temporary Dust Fence & Filter Sock See detail this sht.
Install Sediment Insert. See detail this sht.
Install Sediment Insert. See detail this sht.
Install Sediment Insert.

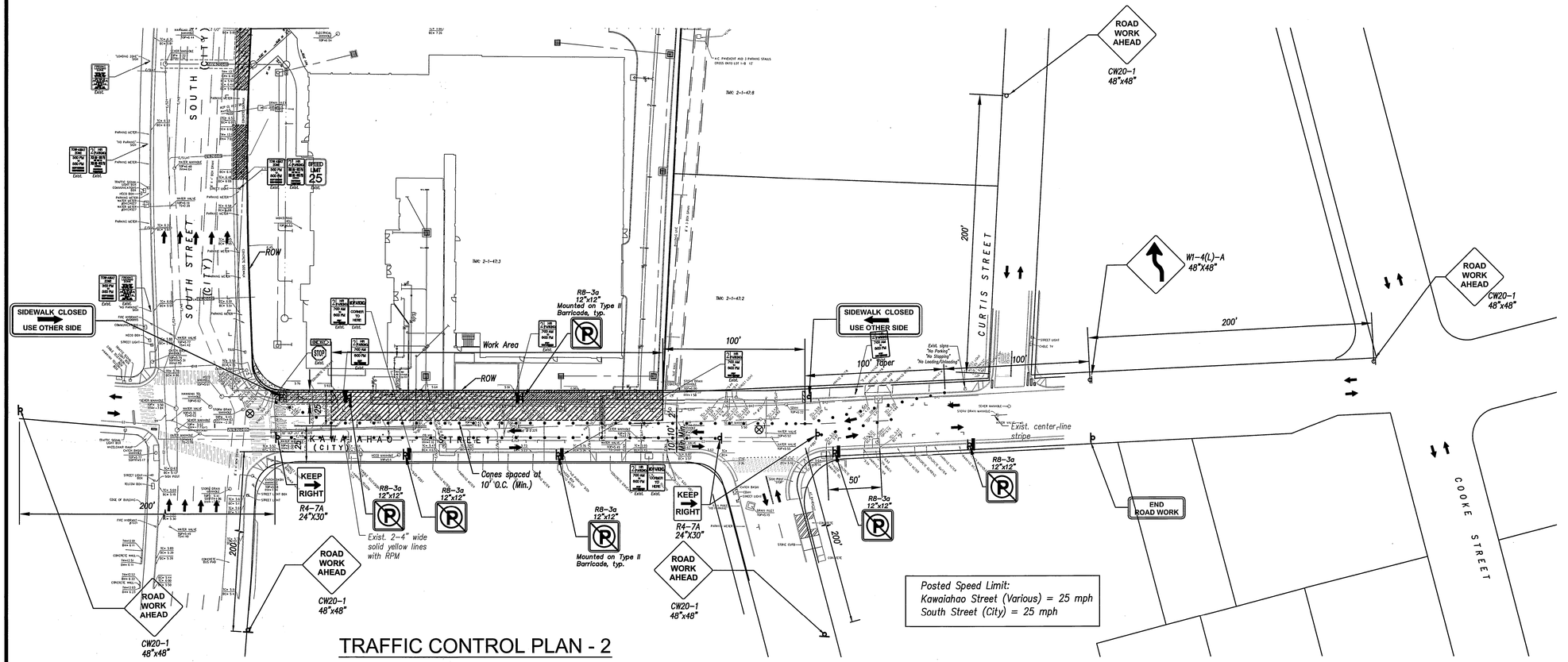

TRAFFIC CONTROL PLAN - 2

Scale: 1" = 40'

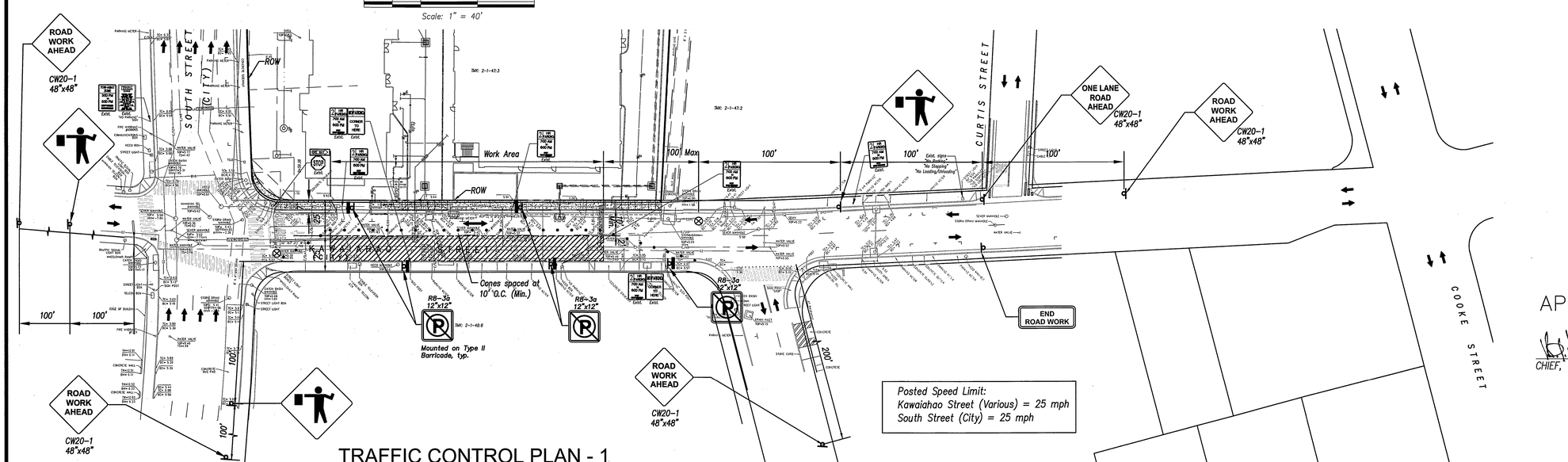

TRAFFIC CONTROL PLAN - 1

Scale: 1" = 40'

LEGEND:

- SIGN
- CONE OR DELINEATOR
- DIRECTION OF TRAFFIC
- WORK AREA
- TYPE III BARRICADE
- ARROW PANEL
- POLICE OFFICER
- TYPE II BARRICADE

APPROVED:

CHIEF, TRAFFIC REVIEW BRANCH, DPP

7/27/13
DATE

REVISIONS

NO.	DATE	

Exp: 4/30/14

DAVID B. BILLS
LICENSED PROFESSIONAL ENGINEER
No. 4516-C
HAWAII, U.S.A.

THIS PROJECT WAS PREPARED BY ME OR UNDER MY SUPERVISION AND CONSTRUCTION OF THIS PROJECT WILL BE UNDER MY OBSERVATION

PER

KAKAAKO WORKFORCE HOUSING
SUBCHAPTER 4 OF 2011 MAUKA PLAN AND RULES
801 SOUTH STREET
HONOLULU, HAWAII
TMK: (1) 2-1-47: 3 & 4

TRAFFIC CONTROL PLAN - 1

KAZU YATO, AIA & ASSOCIATES, INC.
2033 ROUNDTOP TERRACE
HONOLULU, HI 96822
TEL: (808) 945-0040
FAX: (808) 945-0041

DATE	DRAWN	CHECK	FILE
JULY 2013	RE	DB	

SHEET

C-15

Wed, 03 Jul 2013 - 7:47am
C:\Users\buhr\Documents\H_PROJ\451-00 ADVERTISER BLDG\CONST PLANS\451-00 C-15_16 TCP.dwg

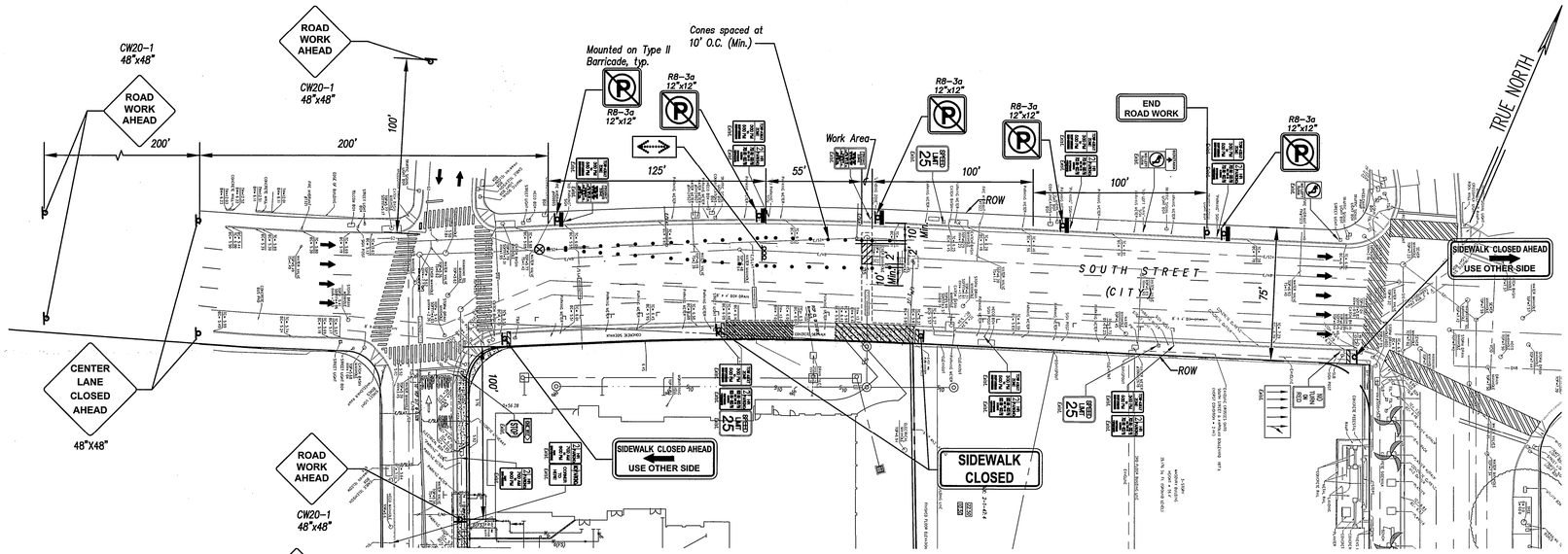

TRAFFIC CONTROL PLAN - 4

Scale in Feet

Note: Closures for center lanes #3 & #4 similar.

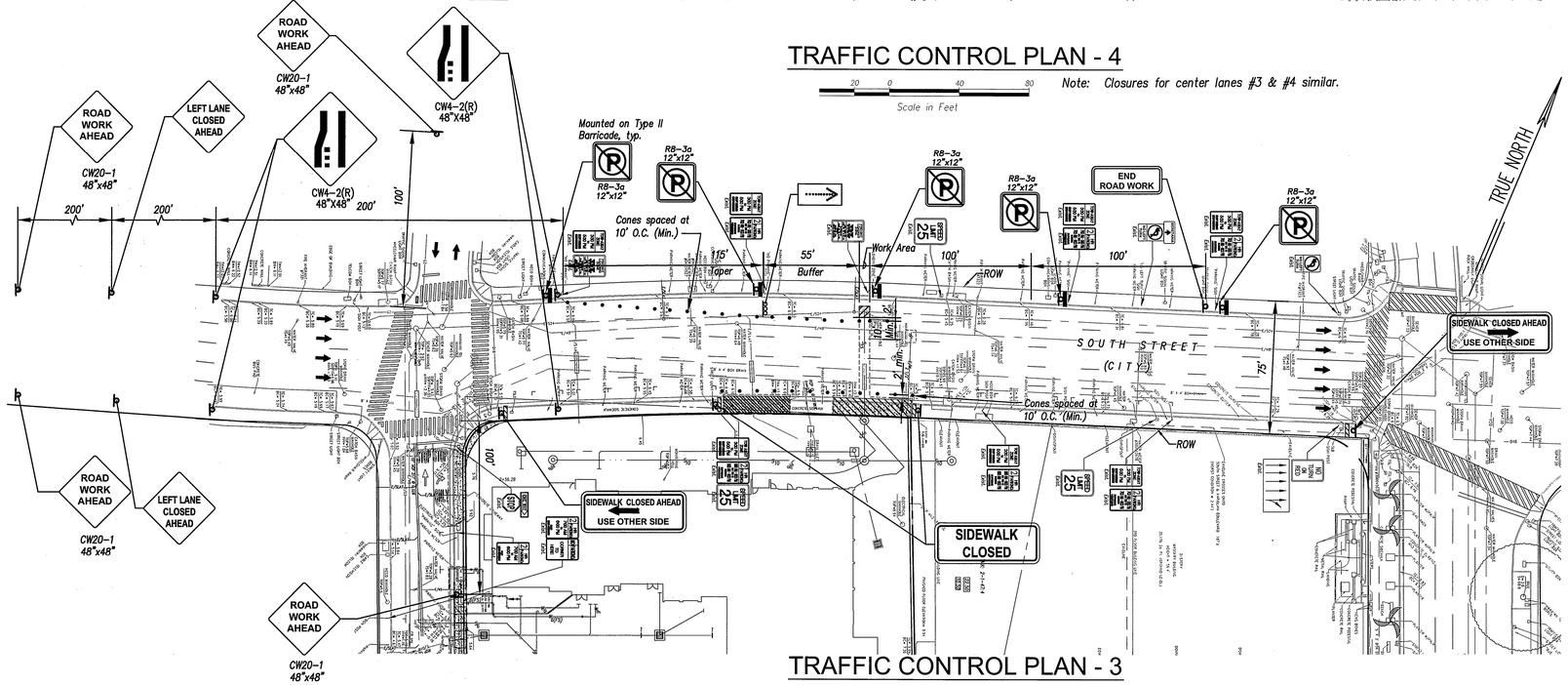

TRAFFIC CONTROL PLAN - 3

Scale in Feet

Note: Right lane closure similar.

Posted Speed Limit:
Kawaiahao Street (Various) = 25 mph
South Street (City) = 25 mph

GENERAL NOTES FOR TRAFFIC CONTROL PLAN:

1. The permittee shall make minor adjustments at intersections, driveways, bridges, structures, etc., to fit field conditions.
2. Cones or delineators shall be extended to a point where they are visible to approaching traffic.
3. Traffic control devices shall be installed such that the sign or device farthest from the work area is placed first. The others shall then be placed progressively toward the work area.
4. Regulatory and warning signs within the construction zone that are in conflict with the traffic control plans shall be removed or covered. All signs shall be restored upon completion of the work.
5. When required by the issuing office, the permittee shall install a flashing arrow signal as shown on the traffic control plans.
6. Flaggers and/or police officers shall be in sight of each other or in direct communication at all times.
7. All traffic lanes shall be a minimum of ten (10) feet wide.
8. All construction warning signs shall be promptly removed or covered whenever the message is not applicable or not in use.
9. The backs of all signs used for traffic control shall be appropriately covered to preclude the display of inapplicable sign messages (i.e., when signs have messages on both faces).
10. Lane closure shall be limited only to the extent of accomplishing each day's work. As soon as each day's work is completed, the permittee shall remove all traffic control devices no longer installation. Existing faded or obliterated pavement markings that are necessary for safe traffic flow in the construction area shall be replaced with temporary or permanent markings before needed to permit free and safe passage of public traffic. Removal shall be in the reverse order of opening the roadway to public traffic each day.
11. Permanent pavement markings and traffic signs shall be replaced upon completion of each phase of work.
12. Cones and delineators shall spaced at a maximum distance of 20 feet apart. A minimum of six (6) channelizing devices shall be used for each taper length.
13. Driveways shall be kept open unless the owners of the property using the right-of-way are otherwise provided for satisfactorily. Further, the permittee shall control traffic going in and out of driveways.
14. Buffer and taper areas on approach to any work area shall be kept clear of vehicles and equipment.
15. A high level warning device (flag tree) shall be installed on approach to all work areas.
16. "No Parking" signs shall be posted within any work area and for the buffer and taper areas approaching the work area.
17. Traffic Control Plans are approved for work on any City Street area only between the hours of 8:30 A.M. and 3:30 P.M.(Mon. – Fri.)

LEGEND:

- SIGN
- CONE OR DELINEATOR
- DIRECTION OF TRAFFIC
- WORK AREA
- TYPE III BARRICADE
- ARROW PANEL
- POLICE OFFICER
- TYPE II BARRICADE

APPROVED:

CHIEF, TRAFFIC REVIEW BRANCH, DPP

7/21/13
DATE

REVISIONS

NO.	DATE	

Exp: 4/30/14

DAVID B. BILLS
LICENSED PROFESSIONAL ENGINEER
No. 4516-C
HAWAII, U.S.A.

THIS PROJECT WAS PREPARED BY ME OR UNDER MY SUPERVISION AND CONSTRUCTION OF THIS PROJECT WILL BE UNDER MY OBSERVATION

KAKAAKO WORKFORCE HOUSING PER
SUBCHAPTER 4 OF 2011 MAUKA PLAN AND RULES
801 SOUTH STREET
HONOLULU, HAWAII
TMK: (1) 2-1-47: 3 & 4

TRAFFIC CONTROL PLAN - 2

KAZU YATO, AIA & ASSOCIATES, INC.
2033 ROUNDTOP TERRACE
HONOLULU, HI 96822
TEL: (808) 945-0040
FAX: (808) 945-0041

DATE	DRAWN	CHECK	FILE
JULY 2013	RE	DB	

SHEET

C-16

Wed, 03 Jul 2013 – 7:47pm
C:\Users\Duhr\Documents\HL_PROJ\451-00 ADVERTISER BLDG\CONST PLANS\451-00 C-15_16 TCP.dwg

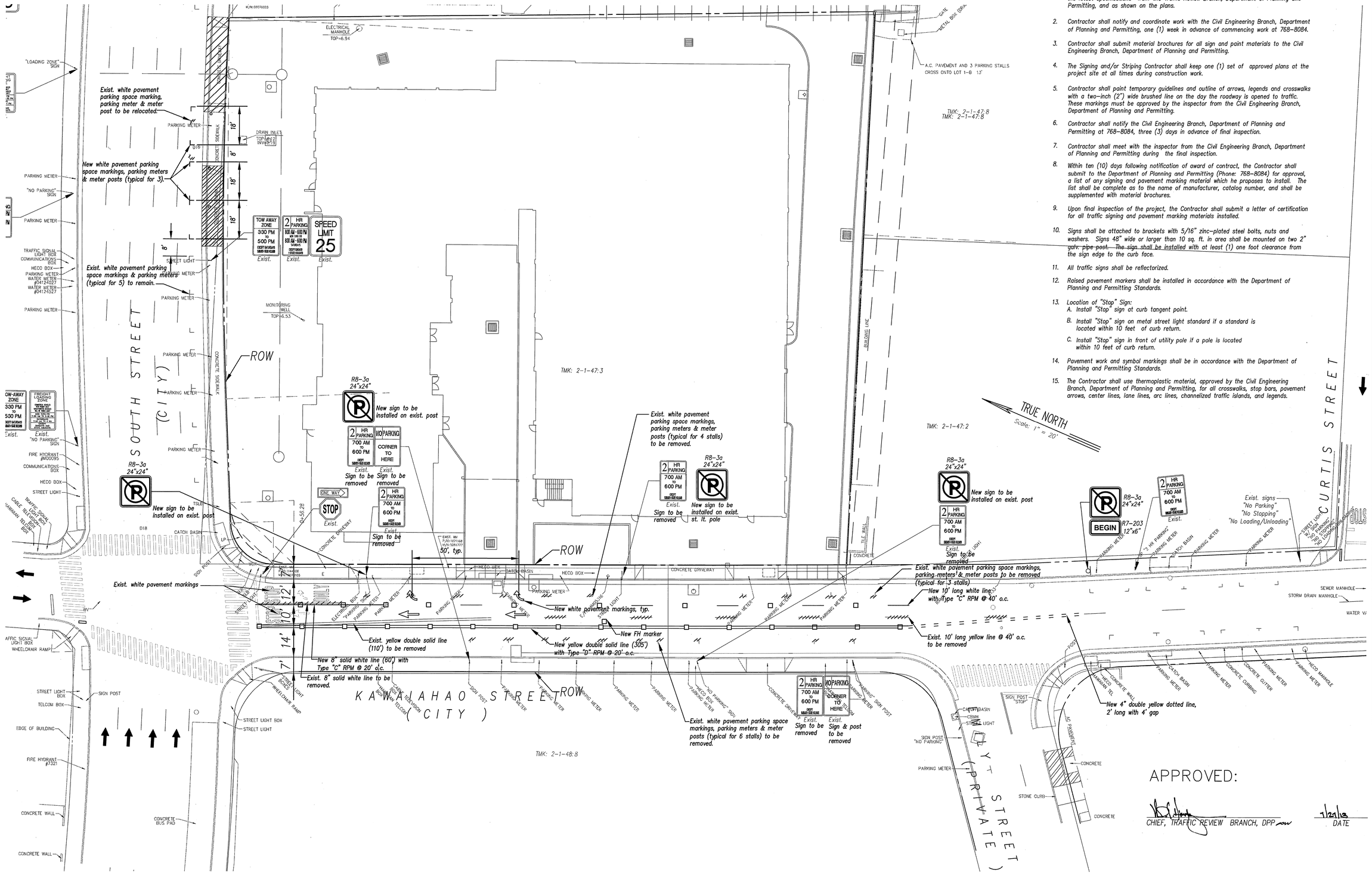

SIGNS & MARKINGS NOTES:

1. All traffic sign and pavement marking installations shall be done in accordance with the "Manual on Uniform Traffic Control Devices for Streets and Highways," 2009 edition, the latest specifications from the Traffic Review Branch, Department of Planning and Permitting, and as shown on the plans.
2. Contractor shall notify and coordinate work with the Civil Engineering Branch, Department of Planning and Permitting, one (1) week in advance of commencing work at 768-8084.
3. Contractor shall submit material brochures for all sign and paint materials to the Civil Engineering Branch, Department of Planning and Permitting.
4. The Signing and/or Striping Contractor shall keep one (1) set of approved plans at the project site at all times during construction work.
5. Contractor shall paint temporary guidelines and outline of arrows, legends and crosswalks with a two-inch (2") wide brushed line on the day the roadway is opened to traffic. These markings must be approved by the inspector from the Civil Engineering Branch, Department of Planning and Permitting.
6. Contractor shall notify the Civil Engineering Branch, Department of Planning and Permitting at 768-8084, three (3) days in advance of final inspection.
7. Contractor shall meet with the inspector from the Civil Engineering Branch, Department of Planning and Permitting during the final inspection.
8. Within ten (10) days following notification of award of contract, the Contractor shall submit to the Department of Planning and Permitting (Phone: 768-8084) for approval, a list of any signing and pavement marking material which he proposes to install. The list shall be complete as to the name of manufacturer, catalog number, and shall be supplemented with material brochures.
9. Upon final inspection of the project, the Contractor shall submit a letter of certification for all traffic signing and pavement marking materials installed.
10. Signs shall be attached to brackets with 5/16" zinc-plated steel bolts, nuts and washers. Signs 48" wide or larger than 10 sq. ft. in area shall be mounted on two 2" galv. pipe post. The sign shall be installed with at least (1) one foot clearance from the sign edge to the curb face.
11. All traffic signs shall be reflectorized.
12. Raised pavement markers shall be installed in accordance with the Department of Planning and Permitting Standards.
13. Location of "Stop" Sign:
    A. Install "Stop" sign at curb tangent point.
    B. Install "Stop" sign on metal street light standard if a standard is located within 10 feet of curb return.
    C. Install "Stop" sign in front of utility pole if a pole is located within 10 feet of curb return.
14. Pavement work and symbol markings shall be in accordance with the Department of Planning and Permitting Standards.
15. The Contractor shall use thermoplastic material, approved by the Civil Engineering Branch, Department of Planning and Permitting, for all crosswalks, stop bars, pavement arrows, center lines, lane lines, arc lines, channelized traffic islands, and legends.

APPROVED:

CHIEF, TRAFFIC REVIEW BRANCH, DPP

7/21/13
DATE

SIGNING & STRIPING PLAN

Scale: 1" = 20'

Posted Speed Limit:
Kawaiahao Street (Various) = 25 mph
South Street (City) = 25 mph

REVISIONS

NO.	DATE	

Exp: 4/30/14
DAVID B. BILLS
LICENSED PROFESSIONAL ENGINEER
No. 4516-C
HAWAII, U.S.A.

THIS PROJECT WAS PREPARED BY ME OR UNDER MY SUPERVISION AND CONSTRUCTION OF THIS PROJECT WILL BE UNDER MY OBSERVATION

KAKAAKO WORKFORCE HOUSING PER
SUBCHAPTER 4 OF 2011 MAUKA PLAN AND RULES
801 SOUTH STREET
HONOLULU, HAWAII
TMK: (1) 2-1-47: 3 & 4

SIGNING & STRIPING PLAN

KAZU YATO, AIA & ASSOCIATES, INC.
2033 ROUNDTOP TERRACE
HONOLULU, HI 96822
TEL: (808) 945-0040
FAX: (808) 945-0041

DATE	DRAWN	CHECK	FILE
JULY 2013	RE	DB	

SHEET

C-17

Fri, 26 Jul 2013 - 9:52am
C:\Users\Duhr\Documents\H_PROJ\451-00 ADVERTISER BLDG\CONST PLANS\451-00 C-17 Signing Striping Plan.dwg

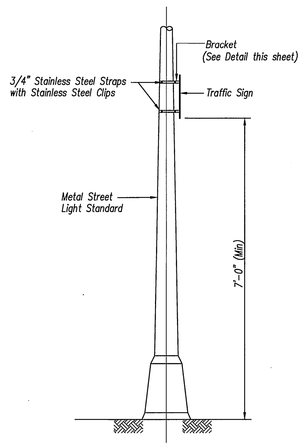

SIGN DETAIL ON LIGHT POLE
Not to Scale

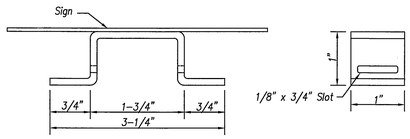

SIGN BRACKET DETAILS
Not to Scale

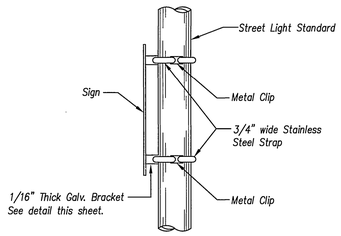

BRACKET STRAP DETAIL
Not to Scale

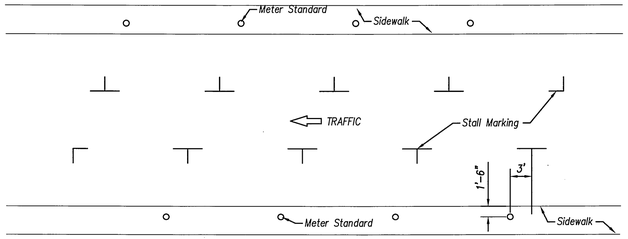

METER LOCATION
Not to Scale

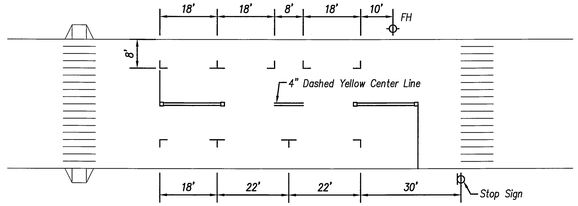

PARKING LIMIT LINES
Not to Scale

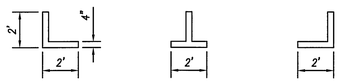

TYPICAL STALL MARKINGS
Not to Scale

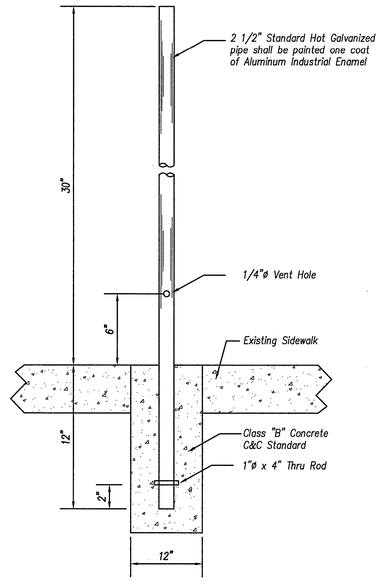

PARKING METER POST DETAIL
Not to Scale

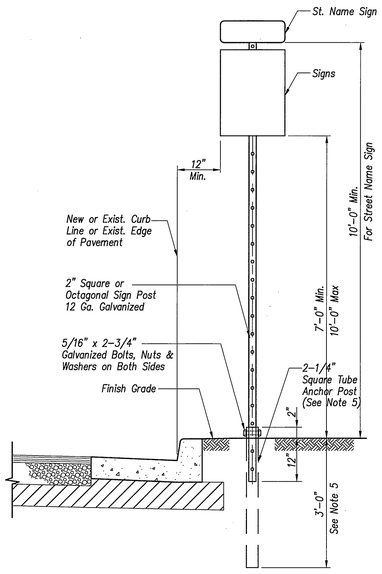

ANCHOR POSTS NOTES:

1. Keep inside of 2-1/4" Anchor Post free from impediments that may prevent proper seating of 2" Sign Post.
2. Square tubing Sign Post shall be telescoping type with 7/16" dia. holes at 1"o.c. on four sides.
3. Octagon Sign Post shall be telescoping type with 7/16" dia. holes at 1" o.c. on two sides.
4. Use 5/16" x 2-3/4" Bolts to secure the octagonal and square tubing post onto the 2-1/4" square tube anchor post.
5. Minimum bury depth for the 2-1/4" anchor post shall be as follows:
   4'-0" Min. at Poor Soil Conditions
   2'-6" Min. at Rocky Conditions

INSTALLATION OF NEW SIGN POST W/ ANCHOR POST, WITHOUT CONCRETE FOOTING
Not to Scale

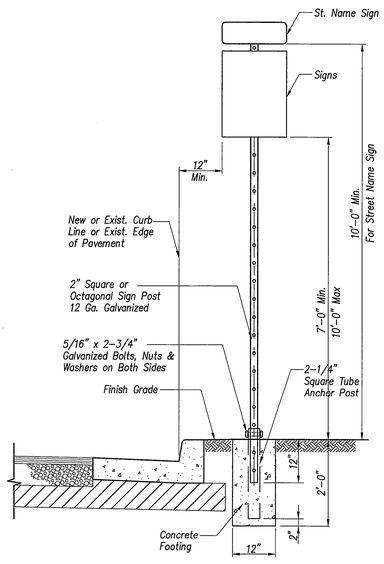

ANCHOR POSTS NOTES:

1. Keep inside of 2-1/4" Anchor Post free from impediments that may prevent proper seating of 2" Sign Post.
2. Square tubing Sign Post shall be telescoping type with 7/16" dia. holes at 1"o.c. on four sides.
3. Octagon Sign Post shall be telescoping type with 7/16" dia. holes at 1" o.c. on two sides.
4. Use 5/16" x 2-3/4" Bolts to secure the octagonal and square tubing post onto the 2-1/4" square tube anchor post.

INSTALLATION OF NEW SIGN POST W/ CONCRETE FOOTING
Not to Scale

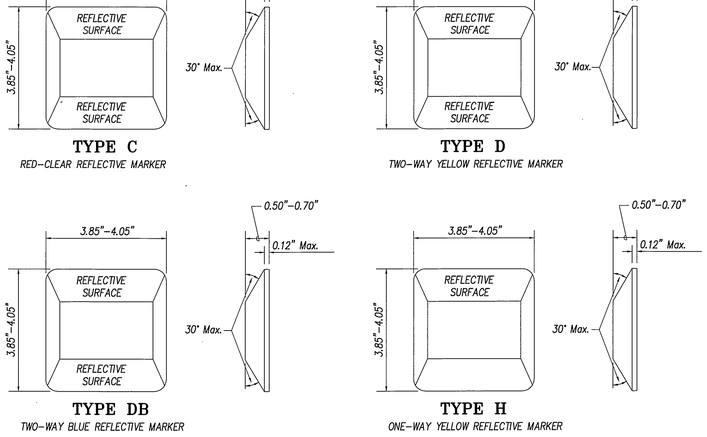

TYPE C
RED-CLEAR REFLECTIVE MARKER

TYPE D
TWO-WAY YELLOW REFLECTIVE MARKER

TYPE DB
TWO-WAY BLUE REFLECTIVE MARKER

TYPE H
ONE-WAY YELLOW REFLECTIVE MARKER

REFLECTIVE MARKER DETAILS
Not to Scale

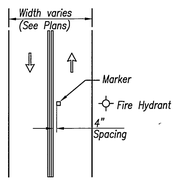

HYDRANT MARKER DETAIL
Not to Scale

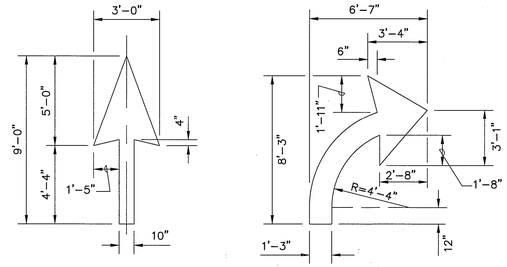

THROUGH ARROW TURN ARROW

PAVEMENT ARROWS
Scale: 1/4" = 1'-0"

APPROVED:

CHIEF, TRAFFIC REVIEW BRANCH, DPP — DATE 7/27/13

NO.	DATE	REVISIONS

Exp: 4/30/14
DAVID B. BILLS
LICENSED PROFESSIONAL ENGINEER
No. 4516-C
HAWAII, USA

THIS PROJECT WAS PREPARED BY ME OR UNDER MY SUPERVISION AND I ACCEPT FULL RESPONSIBILITY FOR THIS PROJECT WILL BE UNDER MY OBSERVATION

KAKAAKO WORKFORCE HOUSING
SUBCHAPTER 4 OF 2011 MAUKA PLAN AND RULES
801 SOUTH STREET
HONOLULU, HAWAII
TMK: (1) 2-1-47: 3 & 4

DETAILS

KAZU YATO, AIA & ASSOCIATES, INC.
2015 KANUKU ST. #308-A
HONOLULU, HI 96822
TEL: (808) 945-0040
FAX: (808) 945-0041

DATE	DRAWN	CHECK	FILE
JULY 2013	RE	DB	

SHEET

C-18

Thu, 25 Jul 2013 - 2:23pm
C:\Users\Author\Documents\VL_PROJ\431-00 ADVERTISED BUDI\CONST PLANS\ACAD-431-00 C-18 Details.dwg

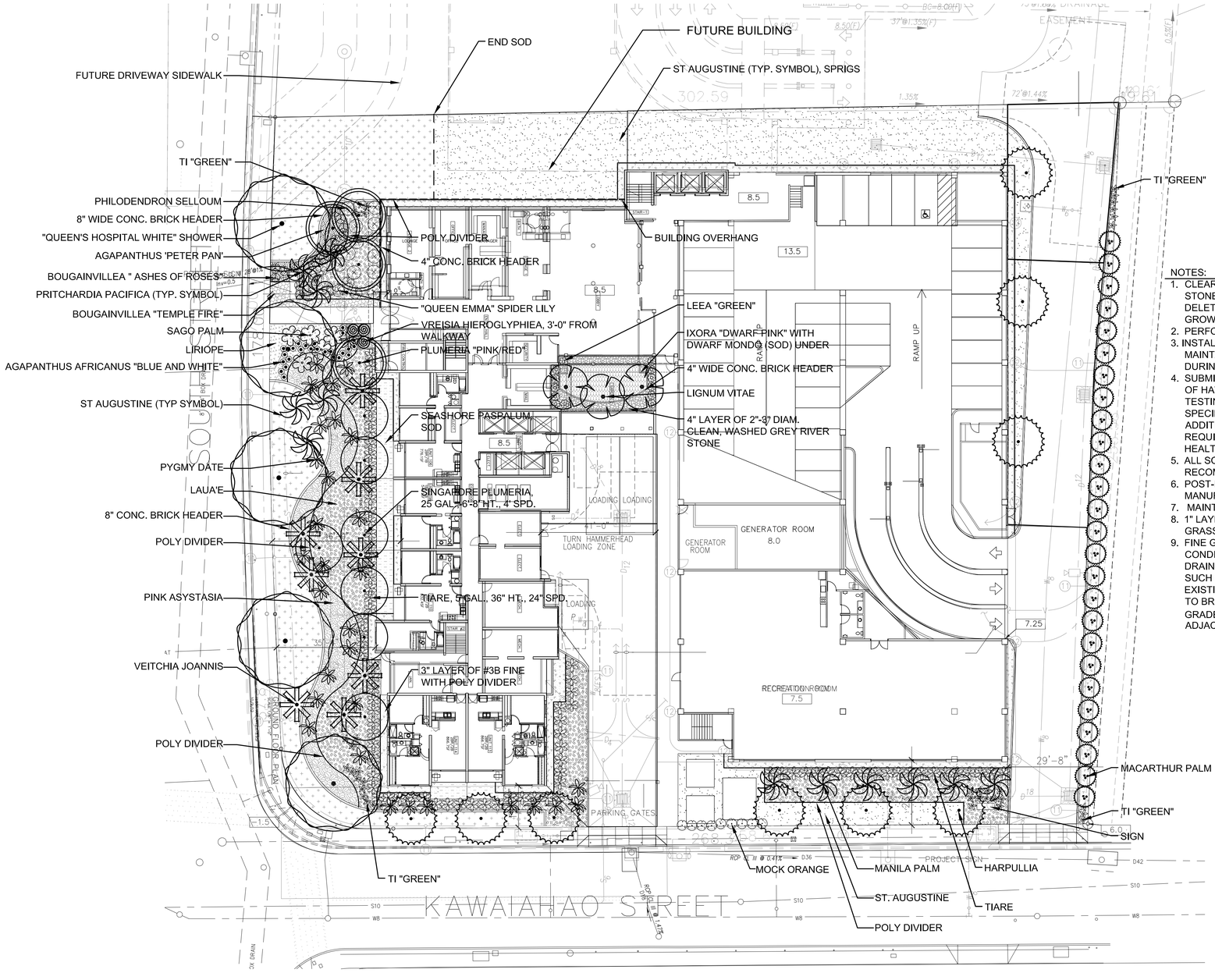

LANDSCAPE PLAN
SCALE: 1" = 20'-0"

NOTES:

1. CLEAR, GRUB, AND FINE GRADE ALL PLANTING AREAS AND REMOVE ALL STONES, CONSTRUCTION MATERIAL, BASE COURSE FILL AND OTHER DELETERIOUS MATERIAL THAT WILL BE ADVERSELY AFFECT PLANT GROWTH.
2. PERFORM PRE-PLANT WEED REMOVAL.
3. INSTALL 4" OF IMPORTED SCREENED SOIL AND TILL INTO EXISTING SOIL. MAINTAIN EXISTING GRADES AND DO NOT ALTER EXISTING SWALES DURING TILLING OPERATION.
4. SUBMIT SAMPLES OF THE IMPORTED SCREENED SOIL TO THE UNIVERSITY OF HAWAII AGRICULTURAL EXTENSION SERVICE (OR APPROVED SOIL TESTING LABORATORY) FOR SOIL ANALYSIS. THE SOIL ANALYSIS SHALL SPECIFY RECOMMENDATIONS ON SOIL AMENDMENTS, CHEMICAL ADDITIVES, FERTILIZER, AND OTHER CORRECTIVE MEASURES, AS REQUIRED, THAT WILL PROVIDE THE NEW PLANT MATERIAL WITH A HEALTHY GROWING MEDIUM
5. ALL SOIL ANALYSIS TESTING AND MATERIALS REQUIRED BASED ON THE RECOMMENDATIONS SHALL BE INCLUDED IN THE CONTRACTOR'S BID.
6. POST-PLANT FERTILIZER FOR PLANT MATERIAL SHALL BE BASED ON MANUFACTURER'S RECOMMENDATIONS.
7. MAINTENANCE PERIOD - 90 DAYS.
8. 1" LAYER OF DECORATIVE BARK MULCH IN ALL PLANTING EXCEPT IN GRASS, RIVER STONE, GRAVEL AREAS.
9. FINE GRADING - LANDSCAPE WORK SHALL BE TIED TO EXISTING CONDITIONS AND CONTROLS SUCH AS BUILDING FINISH FLOOR, STORM DRAINS, ETC. FINISH GRADES SHALL BEAR PROPER RELATIONSHIP TO SUCH CONTROLS. ADJUST ALL NEW WORK AS NECESSARY TO MEET THE EXISTING CONDITIONS. PROVIDE ADDITIONAL IMPORTED SCREENED SOIL TO BRING SOIL LEVEL SO THAT, AFTER INITIAL SETTLEMENT, THE FINISH GRADE FOR LANDSCAPED AREAS SHALL BE 1" TO 1½" LOWER THAN THE ADJACENT WALKWAYS.

REVISIONS

NO.	DATE	
.	.	.

RANDALL Y. FUJIMOTO
LICENSED PROFESSIONAL LANDSCAPE ARCHITECT
No. 5882
HAWAII, U.S.A.
Expiration Date: 4/30/2014

THIS PROJECT WAS PREPARED BY ME OR UNDER MY SUPERVISION AND CONSTRUCTION OF THIS PROJECT WILL BE UNDER MY SUPERVISION.

KAKAAKO WORKFORCE HOUSING PER
SUBCHAPTER 4 OF 2011 MAUKA PLAN AND RULES
801 SOUTH STREET
HONOLULU, HAWAII
LANDSCAPE PLAN

KAZU YATO, AIA & ASSOCIATES, INC.
2033 ROUNDTOP TERRACE
HONOLULU, HI 96822
TEL: (808) 945-0040
FAX: (808) 955-0022

DATE	DRAWN	CHECK	FILE
11/06/12	RF/JB	RF	

SHEET

L-1

PLANT LIST & MISCELLANEOUS

QUANTITY		COMMON / BOTANICAL NAME	SIZE & REMARKS
9	EA.	HARPULLIA	25 GAL., 8'-10' HT., 6' SPD., 6' CLEAR BEFORE BRANCHING
4	EA.	PLUMERIA "PINK/RED"	25 GAL., 6'-8' HT., 4' SPD.
3	EA.	LIGNUM VITAE	6' HT. STRAIGHT TRUNK SPECIMEN
5	EA.	"QUEEN'S HOSPITAL WHITE" SHOWER	15' HT., 10' SPD., 6'-8' CLEAR BEFORE BRANCHING
7	EA.	SINGAPORE PLUMERIA	25 GAL., 6'-8' HT., 4' SPD.
26	EA.	MACARTHUR PALM	6' HT.
12	EA.	MANILA PALM	4' BROWN TRUNK
16	EA.	PRITCHARDIA PACIFICA	10'-12' BROWN TRUNK
31	EA.	PYGMY DATE PALM	24"-36" HT. BROWN TRUNK
5	EA.	SAGO PALM	24" HT. BROWN TRUNK
8	EA.	VEITCHIA JOANNIS	10'-12' BROWN TRUNK
25	EA.	AGAPANTHUS AFRICANUS "BLUE AND WHITE"	3 GAL. 18" HT.
17	EA.	BOUGAINVILLEA " ASHES OF ROSES"	1 GAL., 12" HT., 12" SPD.
160	S.F.	BOUGAINVILLEA "TEMPLE FIRE"	1 GAL., 12" HT., 12" SPD., 18" O.C.
355	S.F.	IXORA "DWARF PINK"	6" POTS, 6" O.C.
13	EA.	LEEA "GREEN"	4' HT.
9	EA.	MOCK ORANGE	24" HT.
13	EA.	PHILODENDRON SELLOUM	5 GAL. 36" HT.
7	EA.	"QUEEN EMMA" SPIDER LILY	5 GAL., 36" HT.
36	EA.	TI "GREEN"	18" HT.
88	EA.	TIARE	5 GAL., 36" HT., 24" SPD.
3	EA.	VREISIA HIEROGLYPHIEA	3' HT.
300	S.F.	AGAPANTHUS ' PETER PAN'	1 GAL. 8" O.C.
5,205	S.F.	LAUA'E FERN	1 GAL., 12" O.C.
415	S.F.	LIRIOPE 'GREEN'	1 GAL. 6" O.C.
1,385	S.F.	PINK ASYSTASIA	6" POTS, 12" O.C.
355	S.F.	DWARF MONDO	SOD
645	S.F.	SEASHORE PASPALUM	SOD
2,365	S.F.	ST. AUGUSTINE / STENOTAPHRUM SECUNDATUM	SOD
6,340	S.F.	ST. AUGUSTINE / STENOTAPHRUM SECUNDATUM	SPRIGS WITH HYDROMULCH
36	C.Y.	GRAVEL	#3B FINE GRAVEL, 3" DEPTH
5	C.Y.	RIVER STONE	CLEAN, WASHED GREY RIVER STONE, 2"-3" DIAM., 4" DEPTH
450	L.F.	CONCRETE BRICK HEADER	
1,225	L.F.	POLY DIVIDER	INSTALL PER MANUFACTURER'S INSTRUCTIONS
24	C.Y.	MULCH	1" DEPTH
253	C.Y.	SCREENED SOIL	4" DEPTH

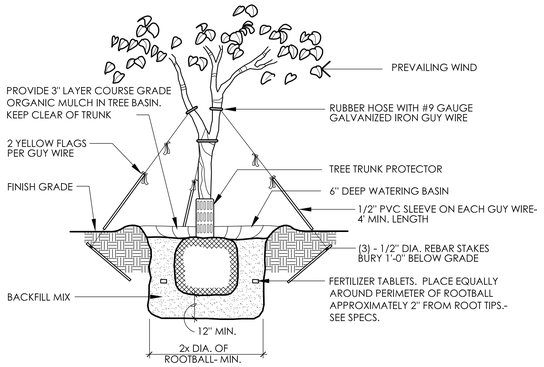

FIELD STOCK AND 25 GALLON TREE PLANTING

NOT TO SCALE — LP-002a 12/31/98

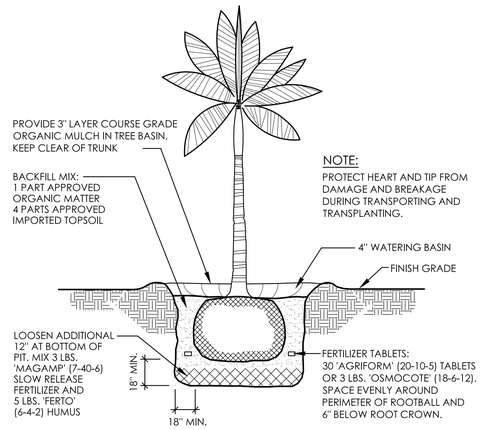

PALM PLANTING

NOT TO SCALE — LP-006 08/25/03

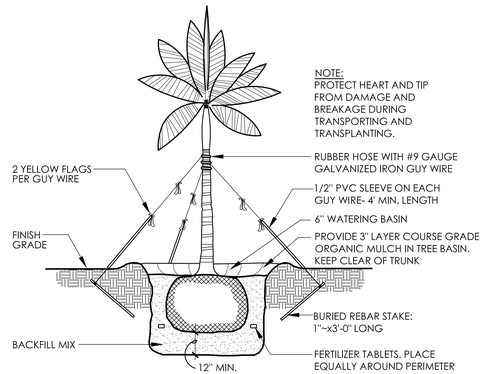

FIELD STOCK PALM PLANTING

NOT TO SCALE — LP-022 06/23/97

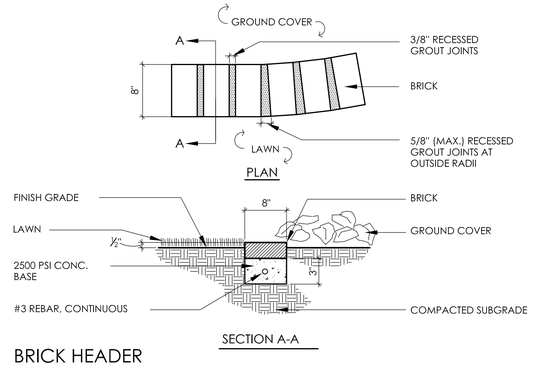

BRICK HEADER

NOT TO SCALE — LH-031a 10/2/02

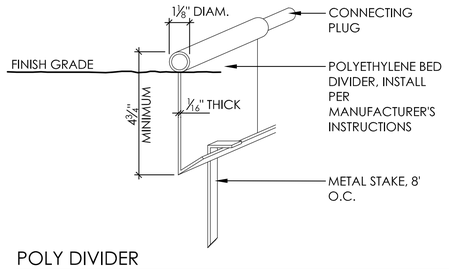

POLY DIVIDER

NOT TO SCALE — LP-003 09/13/05

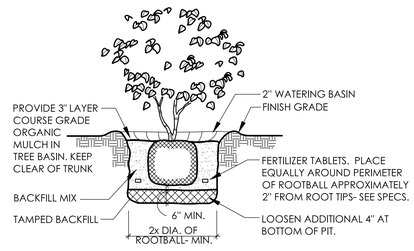

SHRUB PLANTING

NOT TO SCALE — LP-001a 12/31/98

NOTE:
1. BRICK SHALL BE "TILECO INC." 4"x8"x2" BUFF CINDER BRICK
2. WHEN GRAVEL, FINISH GRADE TO BE FLUSH WITH TOP OF BRICK

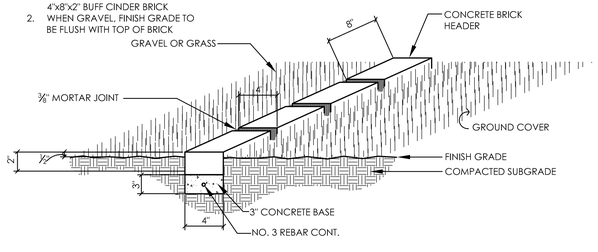

BRICK HEADER - END TO END ISOMETRIC DETAIL

NOT TO SCALE — LH-008 04/22/04

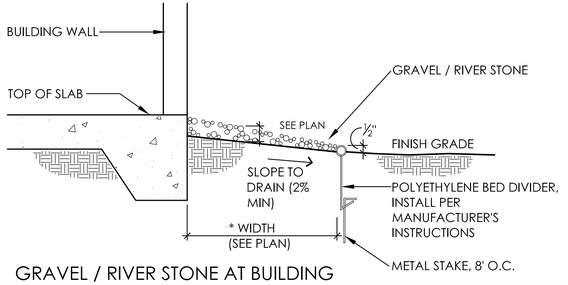

GRAVEL / RIVER STONE AT BUILDING

NOT TO SCALE — LP-004 09/13/05

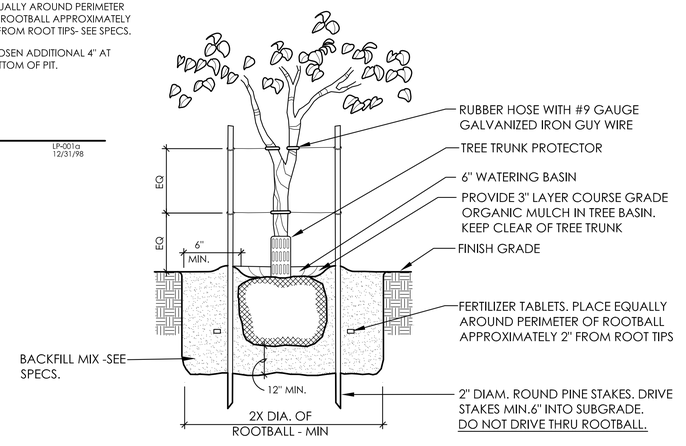

25 GALLON TREE PLANTING

NOT TO SCALE — LP-10b 09/15/05

REVISIONS

NO.	DATE	
.	.	.

RANDAL Y. FUJIMOTO — LICENSED PROFESSIONAL LANDSCAPE ARCHITECT No. 5882 — HAWAII, U.S.A.

Expiration Date: 4/30/2014

THIS PROJECT WAS PREPARED BY ME OR UNDER MY SUPERVISION AND CONSTRUCTION OF THIS PROJECT WILL BE UNDER MY SUPERVISION.

KAKAAKO WORKFORCE HOUSING PER SUBCHAPTER 4 OF 2011 MAUKA PLAN AND RULES

801 SOUTH STREET HONOLULU, HAWAII

PLANT LIST AND DETAILS

KAZU YATO, AIA & ASSOCIATES, INC.
2033 ROUNDTOP TERRACE HONOLULU, HI 96822
TEL: (808) 845-0040 FAX: (808) 955-0052

DATE	DRAWN	CHECK	FILE
11/06/12	RF/JB	RF	

SHEET

L-2

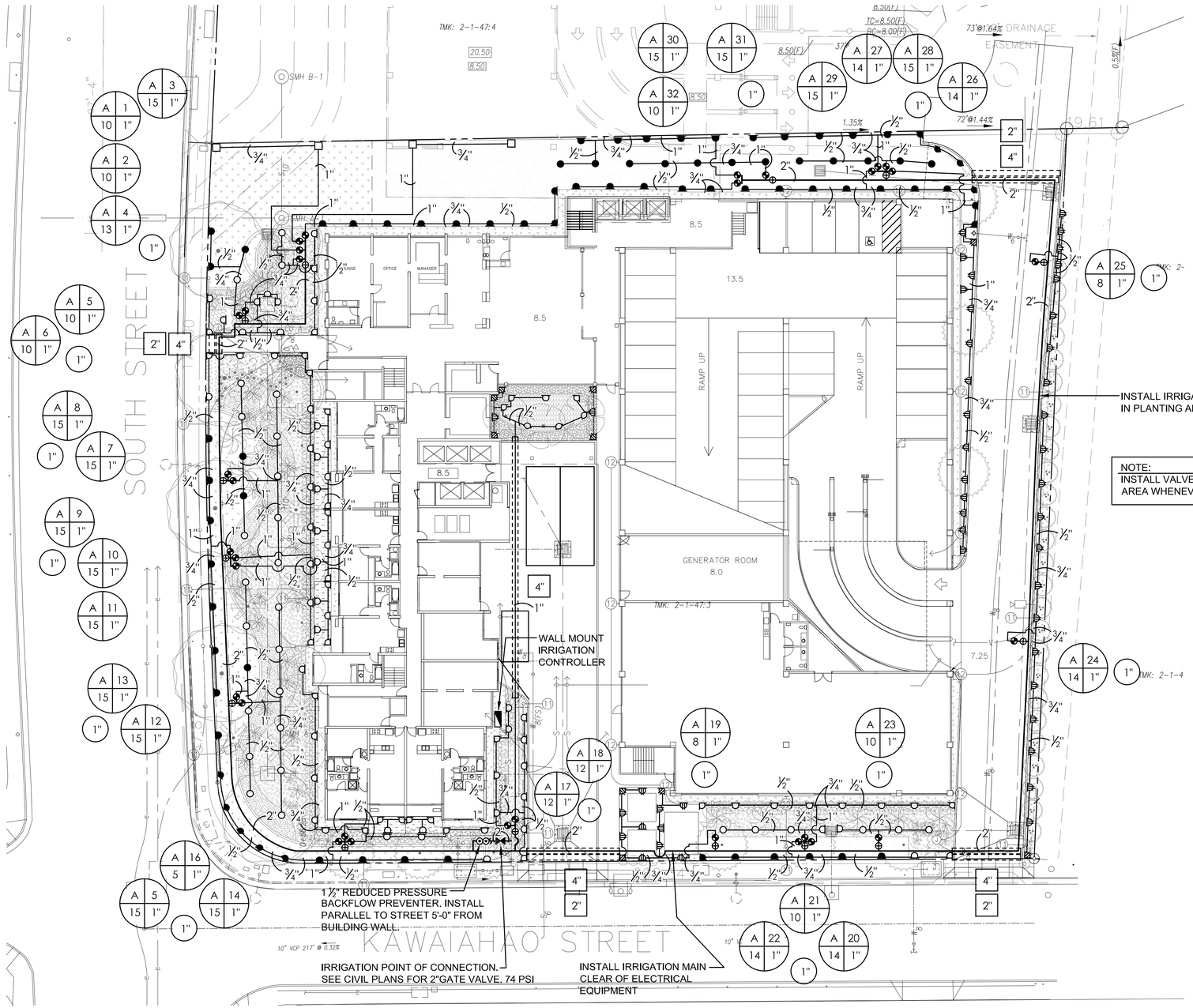

IRRIGATION PLAN

SCALE: 1" = 20'-0"

REVISIONS

NO.	DATE	
.	.	.

RANDAL Y. FUJIMOTO — LICENSED PROFESSIONAL LANDSCAPE ARCHITECT — No. 5882 — HAWAII, U.S.A.

Expiration Date: 4/30/2014

THIS PROJECT WAS PREPARED BY ME OR UNDER MY SUPERVISION AND CONSTRUCTION OF THIS PROJECT WILL BE UNDER MY SUPERVISION.

KAKAAKO WORKFORCE HOUSING PER SUBCHAPTER 4 OF 2011 MAUKA PLAN AND RULES

801 SOUTH STREET
HONOLULU, HAWAII

IRRIGATION PLAN

KAZU YATO, AIA & ASSOCIATES, INC.
2033 ROUNDTOP TERRACE
HONOLULU, HI 96822
TEL: (808) 945-0040
FAX: (808) 955-0022

DATE	DRAWN	CHECK	FILE
11/06/12	RF/AB	RF	

SHEET

L-3

IRRIGATION LEGEND

SYMBOL	DESCRIPTION	P.S.I.	G.P.M.	RAD.	MANUFACTURER & MODEL No. (or approved equal)
	4" POP-UP SPRAY HEAD FULL,1/2,1/3,1/4 CIRCLE	20-30	4/2/1.5/1	4'-15'	RAINBIRD 1804-SAM-15F,-15H,-15T,-15Q; HUNTER PROS-04-CV-15F, -15H, -15T, -15Q
	12" POP-UP SPRAY HEAD: FULL,1/2,1/3,1/4 CIRCLE	20-30	4/2/1.5/1	4'-15'	RAINBIRD 1812-SAM-15F, -15H, -15T, -15Q; HUNTER PROS-12-CV-15F, -15H, -15T, -15Q
	4" POP-UP SPRAY HEAD: SIDE STRIP, END STRIP	20-30	1.5/0.75	4'x30'	RAINBIRD 1804-SAM-15SST, -15LCS, -15RCS; HUNTER PROS-4-CV-SS-530, -LCS-515, -RCS-515
	12" POP-UP SPRAY HEAD: SIDE STRIP, END STRIP	20-30	1.5/0.75	4'x30'	RAINBIRD 1812-SAM-15SST, -15LCS, -15RCS; HUNTER PROS-12-CV-SS-530, -LCS-515, -RCS-515
	5" POP-UP ROTOR HEAD, COLOR CODED NOZZLE FULL CIRCLE, PART CIRCLE	30-90	4	25'-47'	RAINBIRD 5505-6 (BLUE NOZZLE)
	IRRIGATION CONTROLLER, 32 STATIONS				RAINBIRD ESP-32LXME; HUNTER IC-3600SS
	1½" REDUCED PRESSURE BACKFLOW PREVENTER				FEBCO 825Y, BOARD OF WATER SUPPLY APPROVED
1"	ANGLE VALVE / SIZE				BUCKNER VBM
	ELECTRIC VALVE				RAINBIRD PEB, HUNTER ICV
2"	GATE VALVE / SIZE				NIBCO T-113
	IRRIGATION MAIN				PVC SCH. 40 (3" & SMALLER)
	IRRIGATION LATERAL				PVC CLASS 200
2"	IRRIGATION SLEEVE / SIZE				PVC SCH. 40

CONTROLLER / STATION NUMBER

FLOW (G.P.M.) / ELECTRIC VALVE SIZE

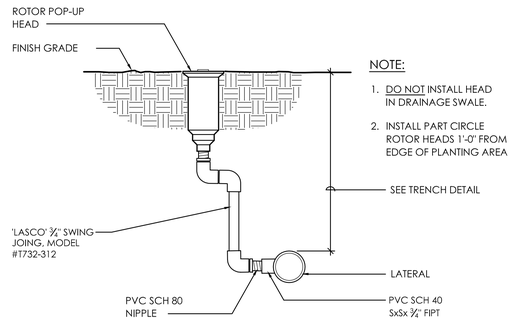

ROTOR HEAD - POP-UP

NOT TO SCALE LR-023 12/30/98

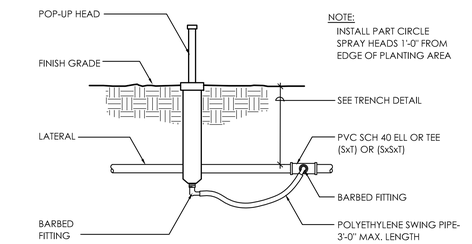

SPRAY HEAD POP-UP

NOT TO SCALE LR-019 12/30/98

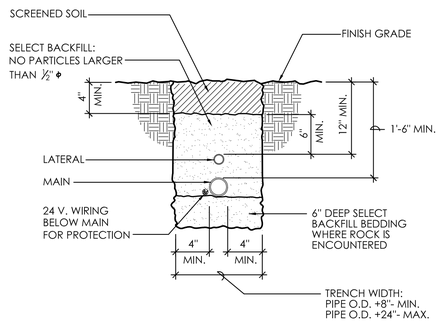

PIPE TRENCH- PLANTING AREAS

NOT TO SCALE LR-070 12/30/98

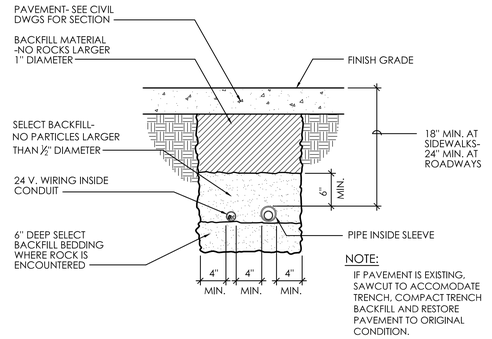

PIPE TRENCH- PAVED AREAS

NOT TO SCALE LR-071a 12/30/98

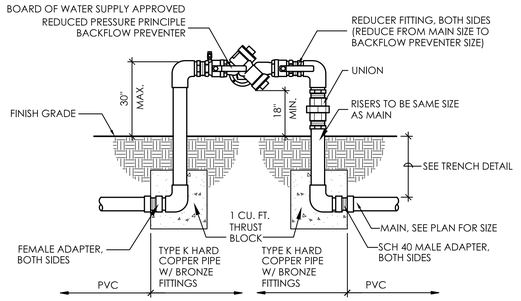

BACKFLOW PREVENTER

NOT TO SCALE LR-060 11/15/00

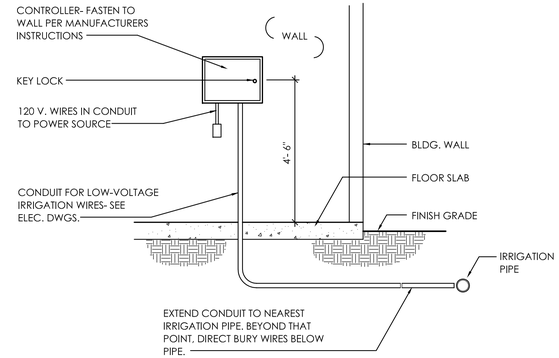

CONTROLLER (INTERIOR WALL MOUNTED)

NOT TO SCALE IC-001 12/30/98

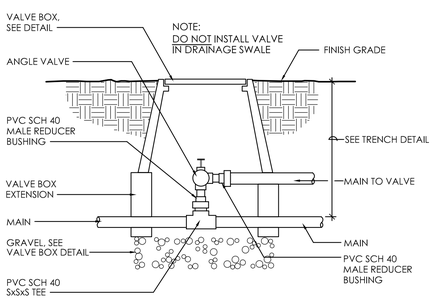

ANGLE VALVE

NOT TO SCALE LR-036 12/30/98

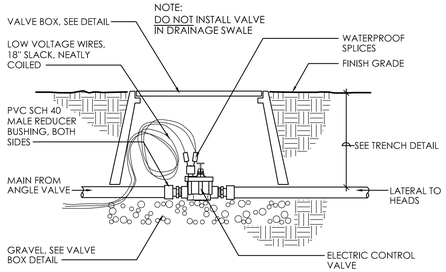

ELECTRIC VALVE

NOT TO SCALE LR-030 12/30/98

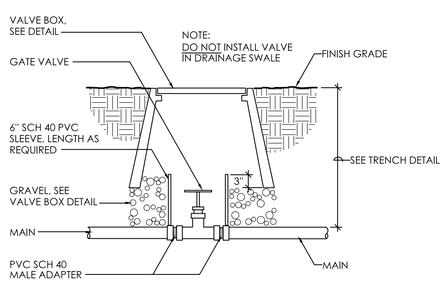

GATE VALVE (3" AND SMALLER)

NOT TO SCALE LR-035 12/30/98

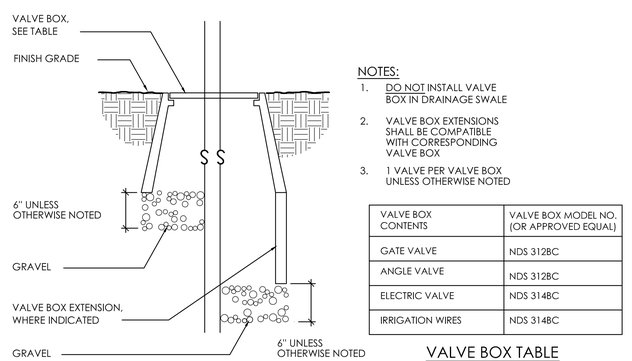

NOTES:

1. DO NOT INSTALL VALVE BOX IN DRAINAGE SWALE
2. VALVE BOX EXTENSIONS SHALL BE COMPATIBLE WITH CORRESPONDING VALVE BOX
3. 1 VALVE PER VALVE BOX UNLESS OTHERWISE NOTED

VALVE BOX CONTENTS	VALVE BOX MODEL NO. (OR APPROVED EQUAL)
GATE VALVE	NDS 312BC
ANGLE VALVE	NDS 312BC
ELECTRIC VALVE	NDS 314BC
IRRIGATION WIRES	NDS 314BC

VALVE BOX TABLE

VALVE BOX

NOT TO SCALE LR-040 12/30/98

REVISIONS

NO.	DATE	REVISIONS
.	.	.

RANDAL Y. FUJIMOTO — LICENSED PROFESSIONAL LANDSCAPE ARCHITECT No. 5892 — HAWAII, U.S.A.

Expiration Date: 4/30/2014

THIS PROJECT WAS PREPARED BY ME OR UNDER MY SUPERVISION AND CONSTRUCTION OF THIS PROJECT WILL BE UNDER MY SUPERVISION.

KAKAAKO WORKFORCE HOUSING PER SUBCHAPTER 4 OF 2011 MAUKA PLAN AND RULES

801 SOUTH STREET HONOLULU, HAWAII

IRRIGATION LEGEND AND DETAILS

KAZU YATO, AIA & ASSOCIATES, INC.
2033 ROUNDTOP TERRACE HONOLULU, HI 96822
TEL: (808) 845-0040
FAX: (808) 955-0052

DATE	DRAWN	CHECK	FILE
11/06/12	RF/AB	RF	

SHEET

L-4

PROJECT DATA

T.M.K: 2-1-47: 3
ADDRESS: 801 SOUTH STREET, HONOLULU 96813
LOT AREA: 76,194SF
FLOOR AREA:
ALLOWABLE= 533,358SF
PROPOSED=530,763,9SF
GROUND FLOOR= 13,891SF
2ND-8TH= 11,326.1SFX7=79,282.7SF
9TH-46TH=11,314.6SFX38=429,954.8SF
GARAGE (GROUND LEVEL)=7,635.4SF

PARKING:
REQUIRED=667
PROVIDED=915
BUIDLING HEIGHT:
ALLOWED=400 FT.
PROPOSED=395FT.

BUIDLING CODE(2006 IBC):

OCCUPANCY GROUP:
R-2 (RESIDENTIAL TOWER)
S-2 (OPEN PARKING GARAGE)

TYPE OF CONSTRUCTION:
TYPE IA- RESIDNETIAL TOWER
TYPE IB- OPEN PARKING GARAGE

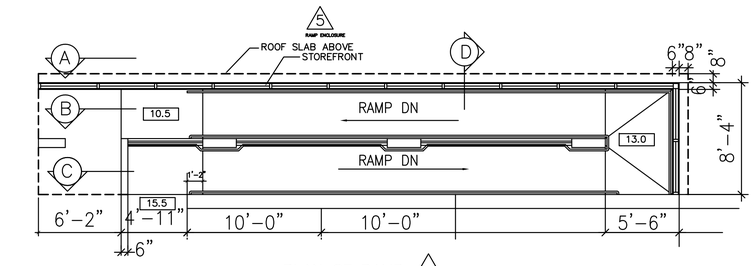

PLAN OF RAMP 3
SCALE: 3/16"=1'-0"

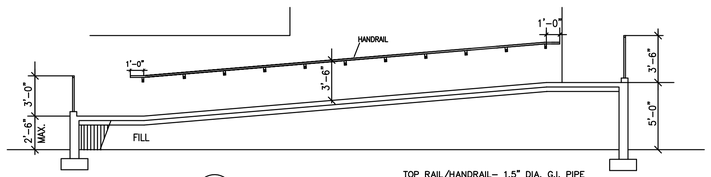

C SECTION
SCALE: 3/16"=1'-0"

TOP RAIL/HANDRAIL- 1.5" DIA. G.I. PIPE
POST- 1.5"X1" G.I. TUBING
BOTTOM RAIL- 1" SQ. G.I. TUBING
PICKETS @ 4" O.C.- 5/8" SQ.BAR G.I.
BRACKETS- 2" X1/4" G.I.

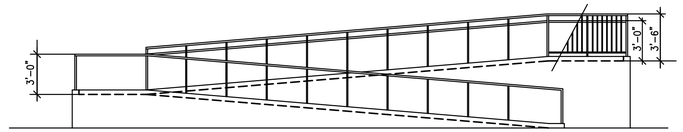

A ELEVATION
SCALE: 3/16"=1'-0"

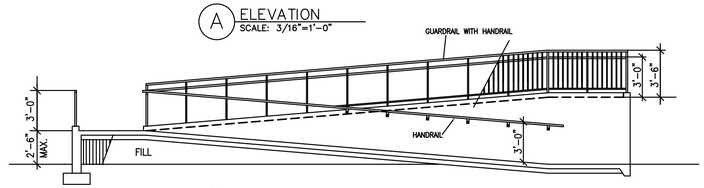

B SECTION
SCALE: 3/16"=1'-0"

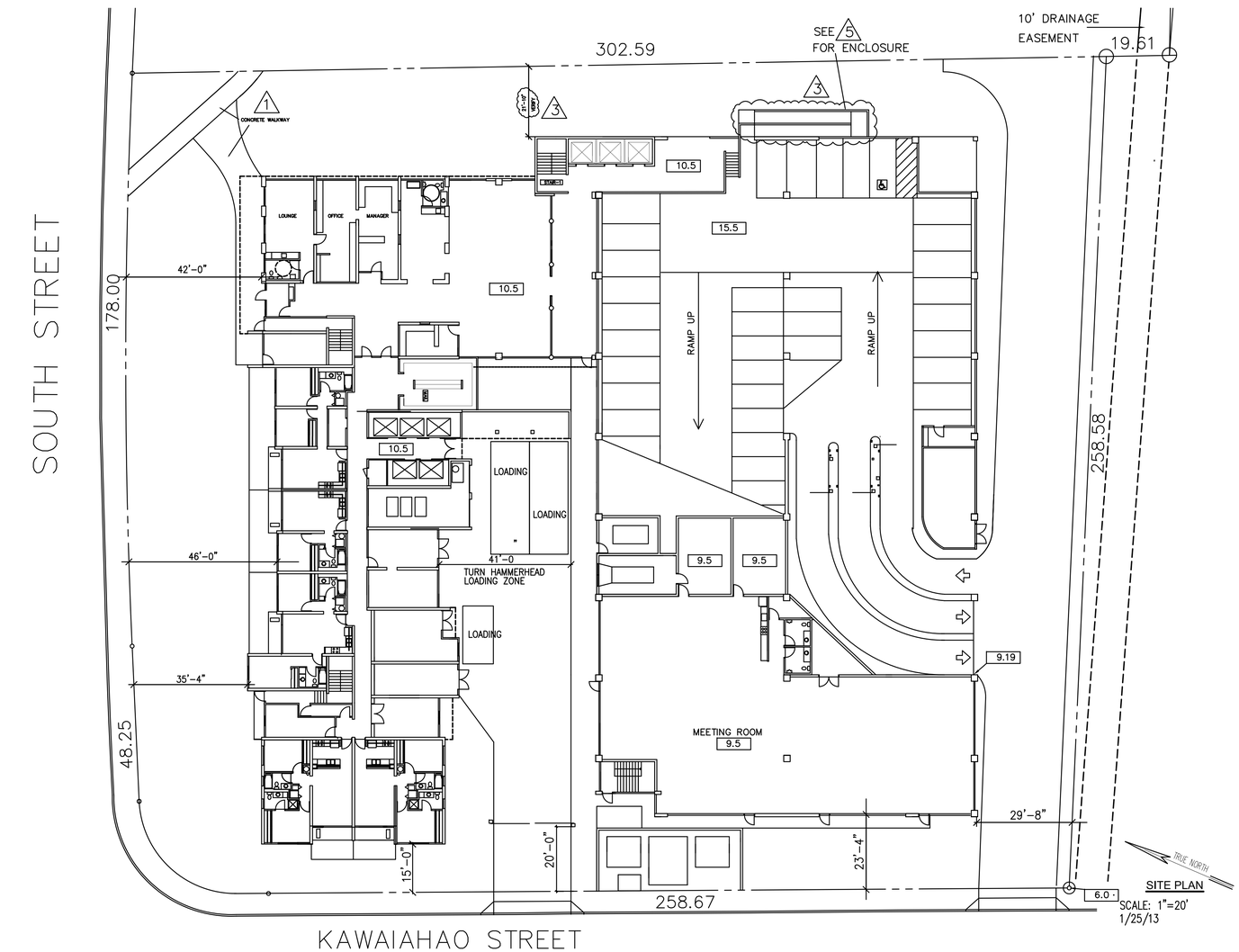

SITE PLAN
SCALE: 1"=20'
1/25/13

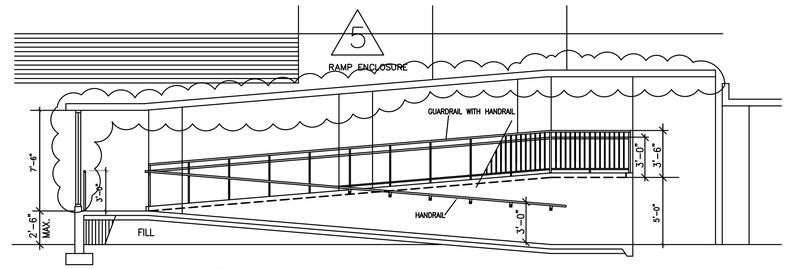

B SECTION
SCALE: 1/8"=1'-0"

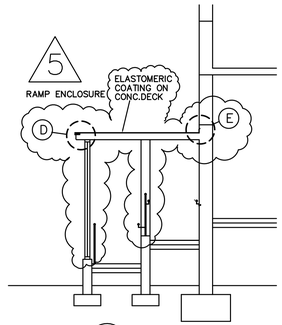

D SECTION
SCALE: 3/16"=1'-0"

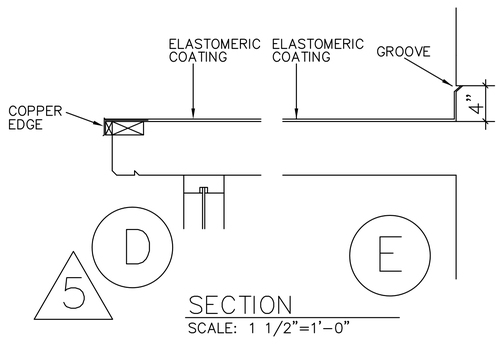

SECTION
SCALE: 1 1/2"=1'-0"

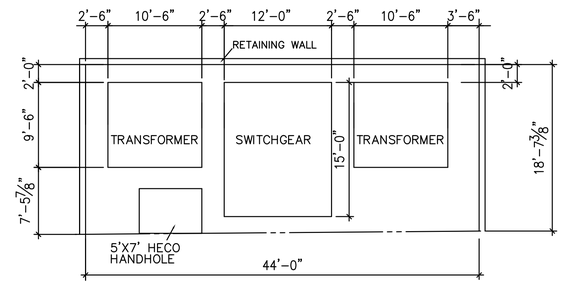

1 PLAN OF HECO APPARATUS
SCALE: 1/8"=1'-0"

REVISIONS

NO.	DATE	REVISIONS
DELTA 1	2/15/13	REVISIONS (ADDED RAMP)
DELTA 3	5/15/13	REVISIONS (ADDED RAMP ENCLOSURE)
DELTA 5	6/26/13	

KAZUTOSHI YATO
LICENSED PROFESSIONAL ARCHITECT
No.3271
HAWAII, U.S.A.
Expiration Date: 4/30/2014

THIS PROJECT WAS PREPARED BY ME OR UNDER MY SUPERVISION AND CONSTRUCTION OF THIS PROJECT WILL BE UNDER MY SUPERVISION.

KAKAAKO WORKFORCE HOUSING PER
SUBCHAPTER 4 OF 2011 MAUKA PLAN AND RULES
801 SOUTH STREET
HONOLULU, HAWAII

SITE PLAN

KAZU YATO, AIA & ASSOCIATES,INC.
2033 ROUNDTOP TERRACE
HONOLULU, HI 96822
TEL: (808) 945-0040
FAX: (808) 945-0041

DATE	DRAWN	CHECK	FILE
	KY	KY	

SHEET

A0.0

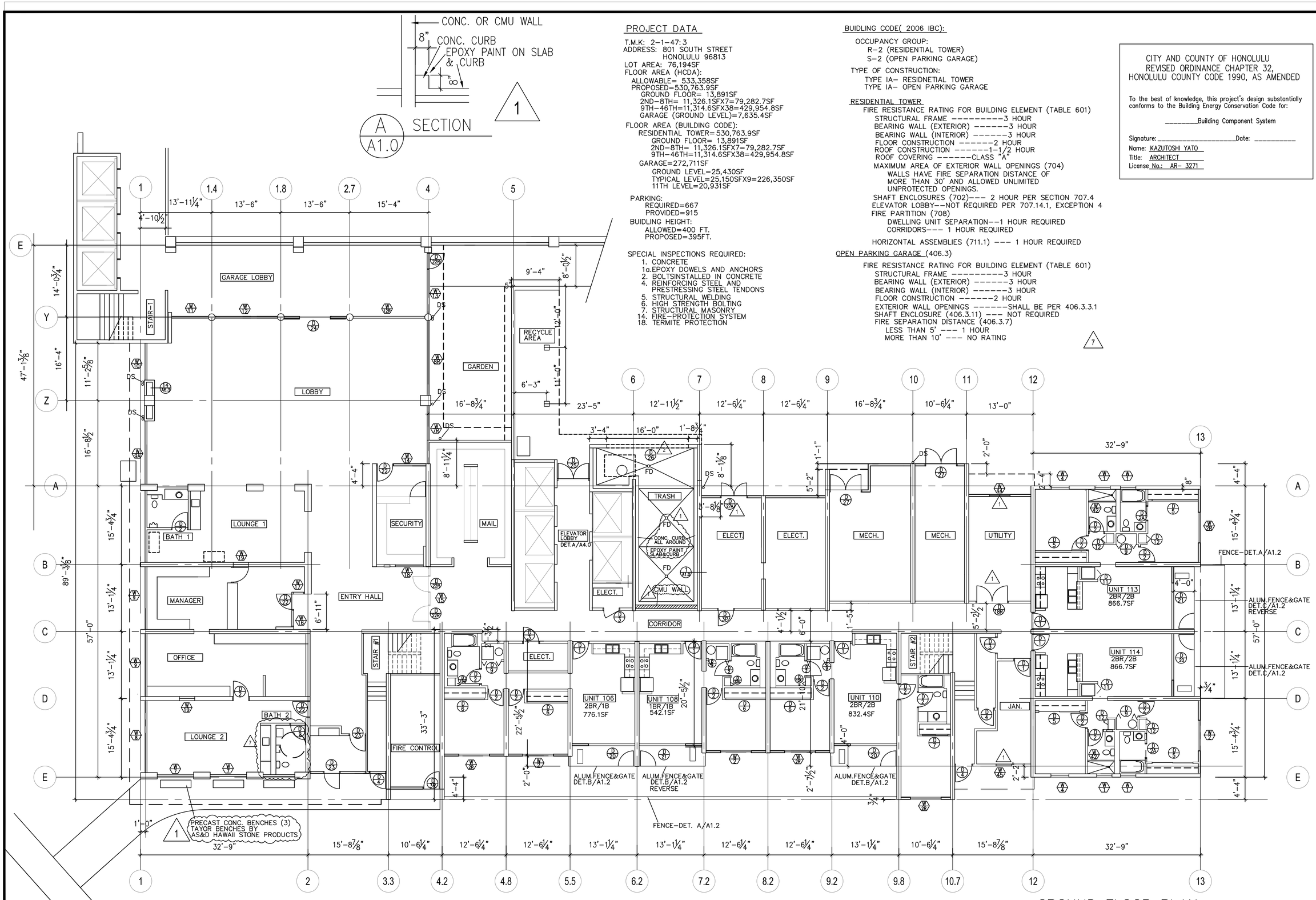

PROJECT DATA

T.M.K: 2-1-47:3
ADDRESS: 801 SOUTH STREET
HONOLULU 96813
LOT AREA: 76,194SF
FLOOR AREA (HCDA):
ALLOWABLE= 533,358SF
PROPOSED=530,763.9SF
GROUND FLOOR= 13,891SF
2ND-8TH= 11,326.1SFX7=79,282.7SF
9TH-46TH=11,314.6SFX38=429,954.8SF
GARAGE (GROUND LEVEL)=7,635.4SF
FLOOR AREA (BUILDING CODE):
RESIDENTIAL TOWER= 530,763.9SF
GROUND FLOOR= 13,891SF
2ND-8TH= 11,326.1SFX7=79,282.7SF
9TH-46TH=11,314.6SFX38=429,954.8SF
GARAGE=272,711SF
GROUND LEVEL=25,430SF
TYPICAL LEVEL=25,150SFX9=226,350SF
11TH LEVEL=20,931SF
PARKING:
REQUIRED=667
PROVIDED=915
BUIDLING HEIGHT:
ALLOWED=400 FT.
PROPOSED=395FT.

SPECIAL INSPECTIONS REQUIRED:
1. CONCRETE
1a. EPOXY DOWELS AND ANCHORS
2. BOLTSINSTALLED IN CONCRETE
4. REINFORCING STEEL AND PRESTRESSING STEEL TENDONS
5. STRUCTURAL WELDING
6. HIGH STRENGTH BOLTING
7. STRUCTURAL MASONRY
14. FIRE-PROTECTION SYSTEM
18. TERMITE PROTECTION

BUIDLING CODE(2006 IBC):

OCCUPANCY GROUP:
R-2 (RESIDENTIAL TOWER)
S-2 (OPEN PARKING GARAGE)

TYPE OF CONSTRUCTION:
TYPE IA- RESIDNETIAL TOWER
TYPE IA- OPEN PARKING GARAGE

RESIDENTIAL TOWER
FIRE RESISTANCE RATING FOR BUILDING ELEMENT (TABLE 601)
STRUCTURAL FRAME ----------3 HOUR
BEARING WALL (EXTERIOR) -------3 HOUR
BEARING WALL (INTERIOR) -------3 HOUR
FLOOR CONSTRUCTION -------2 HOUR
ROOF CONSTRUCTION -------1-1/2 HOUR
ROOF COVERING -------CLASS "A"
MAXIMUM AREA OF EXTERIOR WALL OPENINGS (704)
WALLS HAVE FIRE SEPARATION DISTANCE OF MORE THAN 30' AND ALLOWED UNLIMITED UNPROTECTED OPENINGS.
SHAFT ENCLOSURES (702)--- 2 HOUR PER SECTION 707.4
ELEVATOR LOBBY--NOT REQUIRED PER 707.14.1, EXCEPTION 4
FIRE PARTITION (708)
DWELLING UNIT SEPARATION--1 HOUR REQUIRED
CORRIDORS--- 1 HOUR REQUIRED
HORIZONTAL ASSEMBLIES (711.1) --- 1 HOUR REQUIRED

OPEN PARKING GARAGE (406.3)
FIRE RESISTANCE RATING FOR BUILDING ELEMENT (TABLE 601)
STRUCTURAL FRAME ----------3 HOUR
BEARING WALL (EXTERIOR) -------3 HOUR
BEARING WALL (INTERIOR) -------3 HOUR
FLOOR CONSTRUCTION --------2 HOUR
EXTERIOR WALL OPENINGS -------SHALL BE PER 406.3.3.1
SHAFT ENCLOSURE (406.3.11) ---- NOT REQUIRED
FIRE SEPARATION DISTANCE (406.3.7)
LESS THAN 5' --- 1 HOUR
MORE THAN 10' --- NO RATING

CITY AND COUNTY OF HONOLULU
REVISED ORDINANCE CHAPTER 32,
HONOLULU COUNTY CODE 1990, AS AMENDED

To the best of knowledge, this project's design substantially conforms to the Building Energy Conservation Code for:

_____Building Component System

Signature: _____Date: _____
Name: KAZUTOSHI YATO
Title: ARCHITECT
License No.: AR- 3271

GROUND FLOOR PLAN
SCALE 1/8" = 1'-0"
7/18/13

NO.	DATE	REVISIONS
DELTA 1	12/15/13	BLDG. DEPT. COMMENTS
DELTA 7	7/28/13	

KAZUTOSHI YATO LICENSED PROFESSIONAL ARCHITECT No.3271 HAWAII U.S.A.
Expiration Date: 4/30/2014

THIS PROJECT WAS PREPARED BY ME OR UNDER MY SUPERVISION AND CONSTRUCTION OF THIS PROJECT WILL BE UNDER MY SUPERVISION.

KAKAAKO WORKFORCE HOUSING PER SUBCHAPTER 4 OF 2011 MAUKA PLAN AND RULES
801 SOUTH STREET
HONOLULU, HAWAII

GROUND FLOOR PLAN

KAZU YATO, AIA & ASSOCIATES,INC.
2333 KAPIOLANI TERRACE
HONOLULU, HI 96822
TEL: (808) 945-0040
FAX: (808) 945-0041

DATE	DRAWN	CHECK	FILE
	AF	KY	

SHEET
A1.0

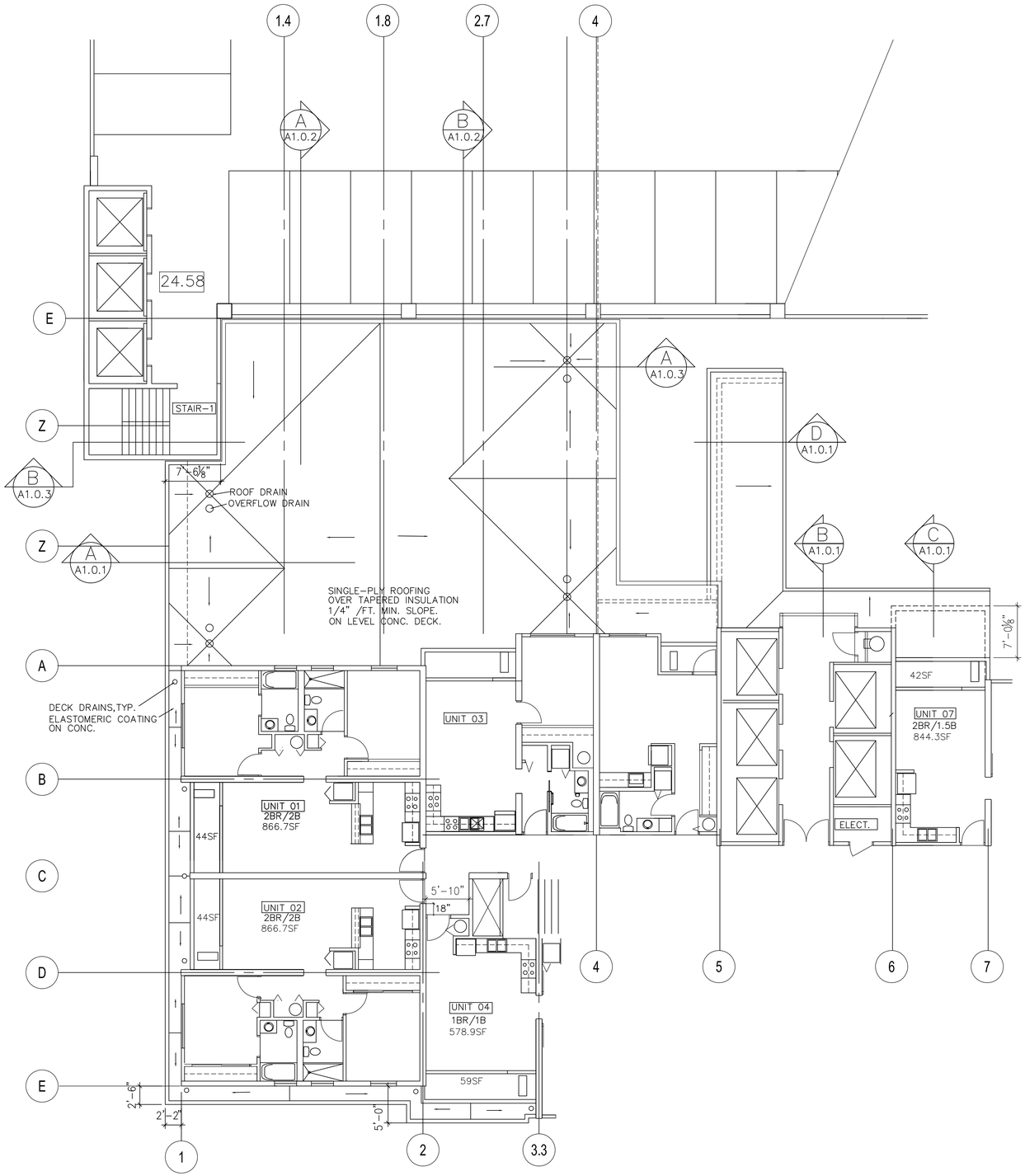

PARTIAL 2ND FLOOR PLAN
SCALE 3/16" = 1'-0"

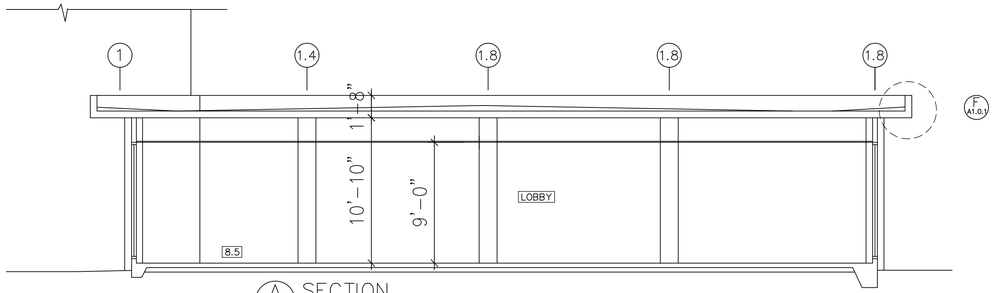

A A1.0.1 SECTION
SCALE: 1/4" = 1'-0"
10/1/12

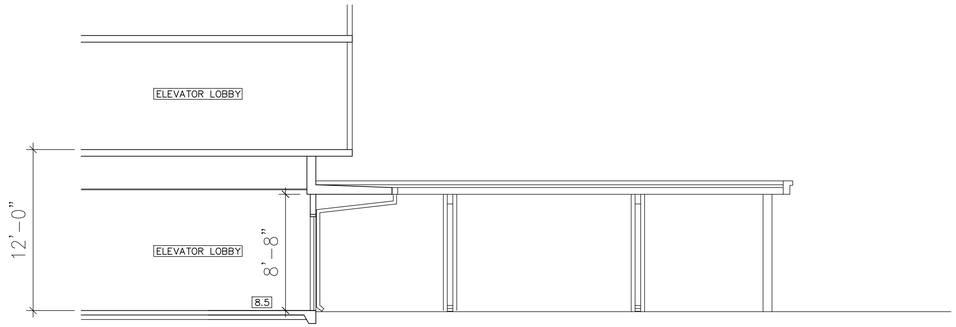

B A1.0.1 SECTION
SCALE: 1/4" = 1'-0"
10/27/12

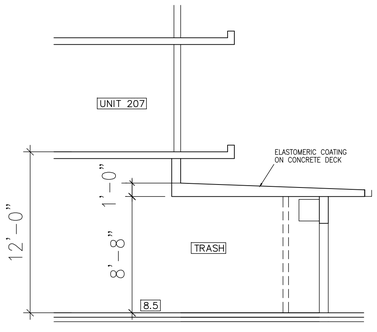

C A1.0.1 SECTION
SCALE: 1/4" = 1'-0"
10/27/12

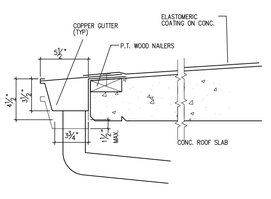

E A1.0.1 COPPER GUTTER & D.S.
SCALE: 1-1/2" = 1'-0"

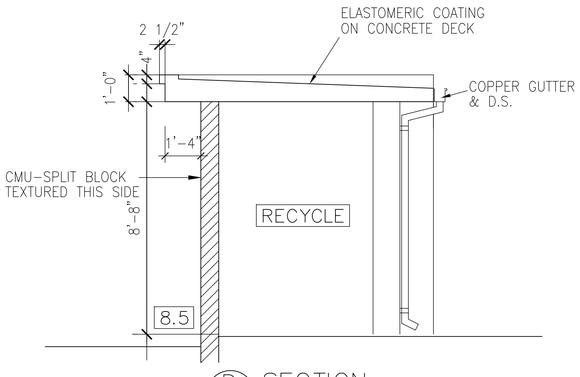

D A1.0.1 SECTION
SCALE: 1/4" = 1'-0"

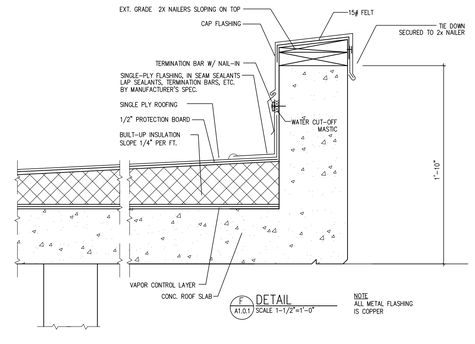

F A1.0.1 DETAIL
SCALE 1-1/2"=1'-0"

NOTE
ALL METAL FLASHING
IS COPPER

NO.	DATE	REVISIONS
.	.	.

KAZUTOSHI YATO
LICENSED PROFESSIONAL ARCHITECT
No. 3271
HAWAII, U.S.A.
Expiration Date: 4/30/2014

THIS PROJECT WAS PREPARED BY ME OR UNDER MY SUPERVISION AND CONTROL AND THIS PROJECT WILL BE UNDER MY SUPERVISION.

KAKAAKO WORKFORCE HOUSING PER SUBCHAPTER 4 OF 2011 MAUKA PLAN AND RULES
801 SOUTH STREET
HONOLULU, HAWAII
PARTIAL 2ND FLOOR PLAN

KAZU YATO, AIA & ASSOCIATES,INC.
2033 ROUNDTOP TERRACE
HONOLULU, HI 96822
TEL: (808) 946-5040
FAX: (808) 945-5041

DATE	DRAWN	CHECK	FILE
	KY	KY	

SHEET
A1.0.1

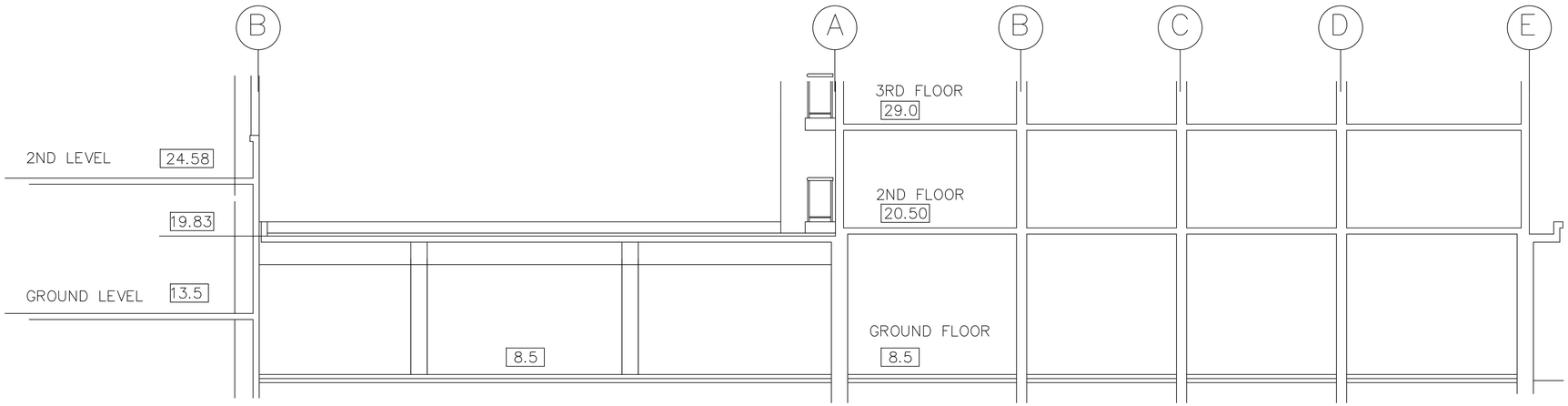

A A1.0.2 SECTION
SCALE 3/16" = 1'-0"
10/6/12

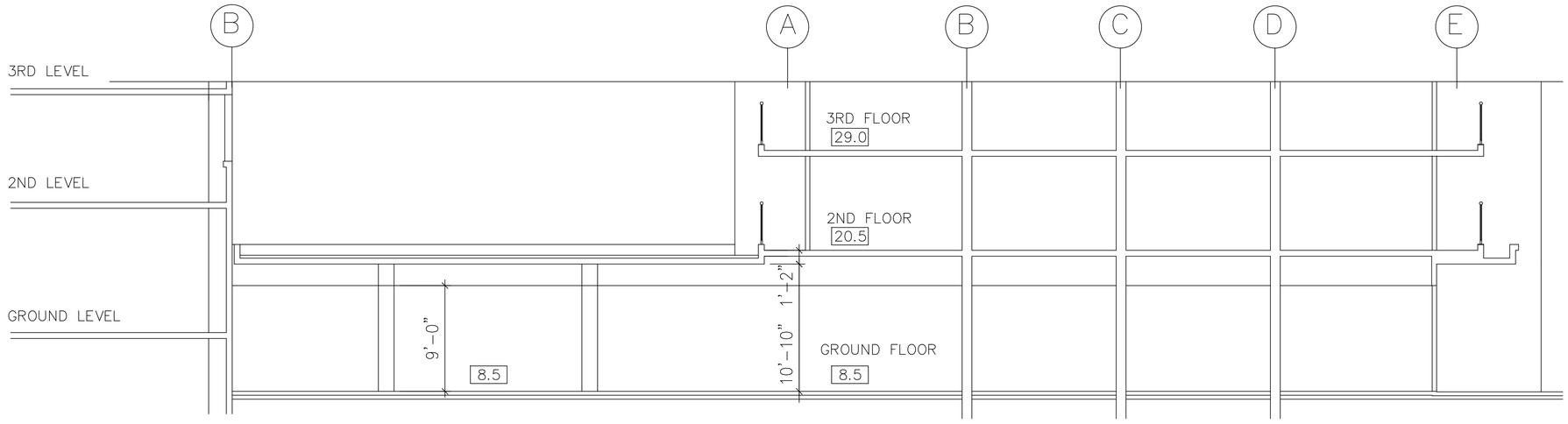

B A1.0.2 SECTION
SCALE 3/16" = 1'-0"
10/6/12

NO.	DATE	REVISIONS
.	.	.

KAZUTOSHI YATO
LICENSED PROFESSIONAL ARCHITECT
No. 3271
HAWAII, U.S.A.
Expiration Date: 4/30/2014

THIS PROJECT WAS PREPARED BY ME OR UNDER MY SUPERVISION AND CONSTRUCTION OF THIS PROJECT WILL BE UNDER MY SUPERVISION.

KAKAAKO WORKFORCE HOUSING PER SUBCHAPTER 4 OF 2011 MAUKA PLAN AND RULES

801 SOUTH STREET
HONOLULU, HAWAII

SECTIONS

KAZU YATO, AIA & ASSOCIATES, INC.
2033 RICHARD TERRACE
HONOLULU, HI 96822
TEL: (808) 945-0040
FAX: (808) 945-0041

DATE	DRAWN	CHECK	FILE
	KY	KY	

SHEET

A1.0.2

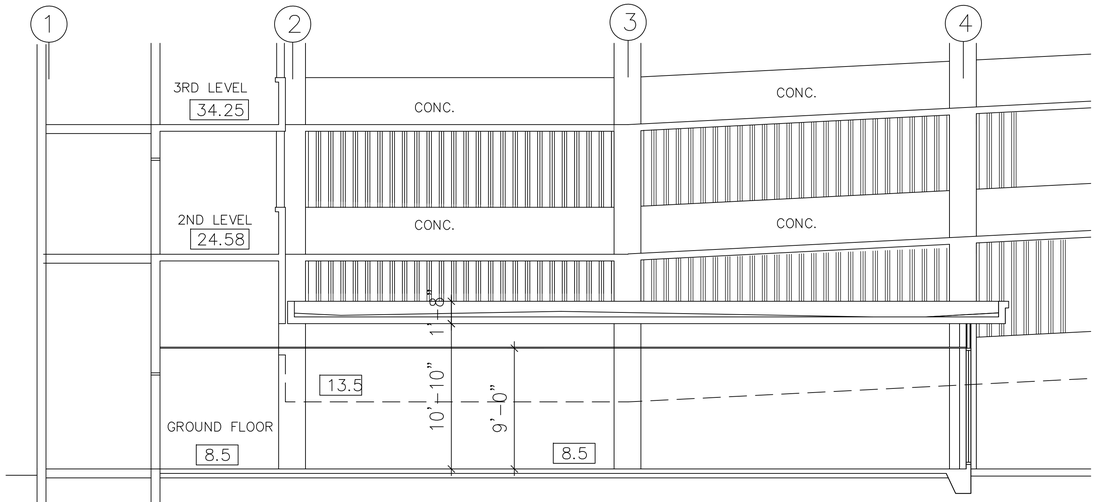

A A1.0.3 SECTION
SCALE: 3/16" = 1'-0"
10/1/12

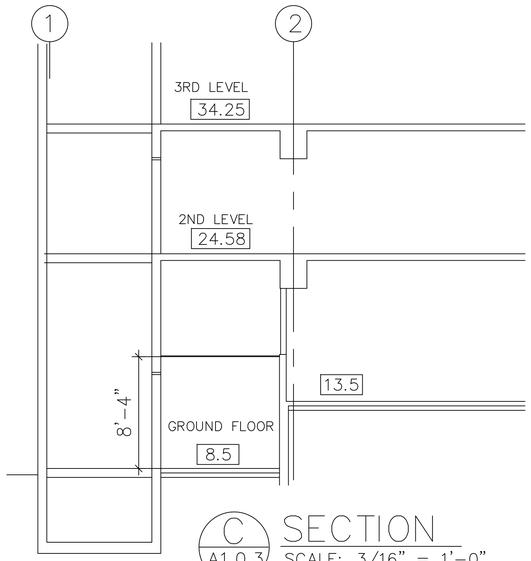

C A1.0.3 SECTION
SCALE: 3/16" = 1'-0"
11/3/12

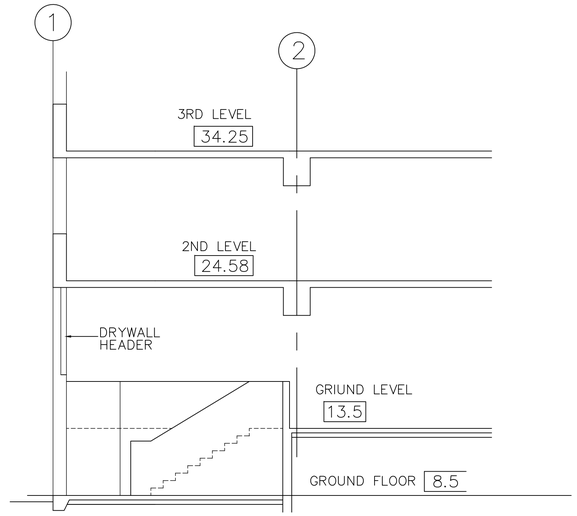

D A1.0.3 SECTION
SCALE: 3/16" = 1'-0"
11/3/12

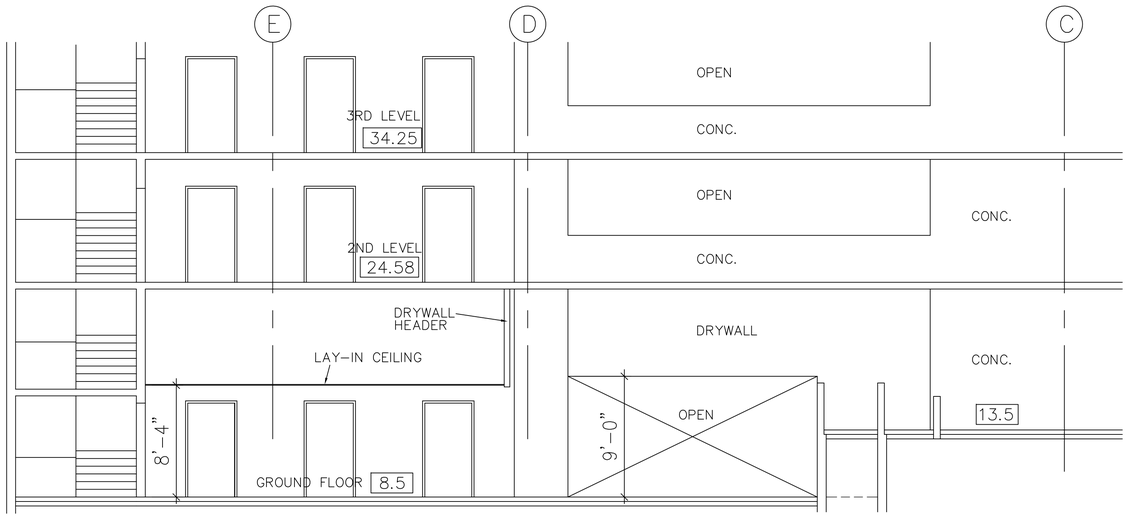

E A1.0.3 SECTION
SCALE: 3/16" = 1'-0"
11/3/12

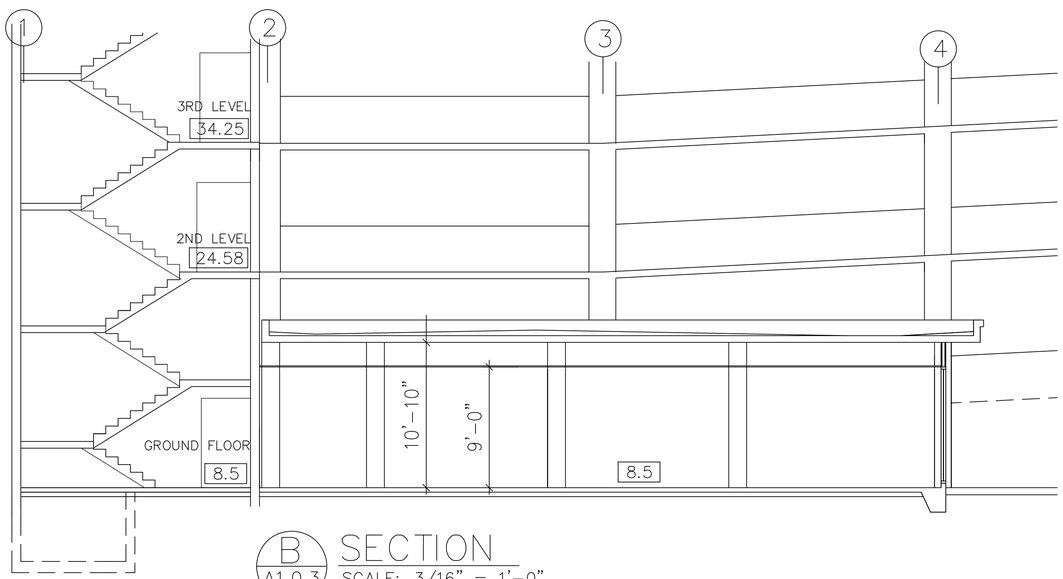

B A1.0.3 SECTION
SCALE: 3/16" = 1'-0"
10/1/12

REVISIONS

NO.	DATE
.	.

KAZUTOSHI YATO
LICENSED PROFESSIONAL ARCHITECT
No.3271
HAWAII, U.S.A.
Expiration Date: 4/30/2014

THIS PROJECT WAS PREPARED BY ME OR UNDER MY SUPERVISION AND CONSTRUCTION OF THIS PROJECT WILL BE UNDER MY SUPERVISION.

KAKAAKO WORKFORCE HOUSING PER
SUBCHAPTER 4 OF 2011 MAUKA PLAN AND RULES

801 SOUTH STREET
HONOLULU, HAWAII

SECTIONS

KAZU YATO, AIA & ASSOCIATES, INC.
2033 ROOSTOP TERRACE
HONOLULU, HI 96822
TEL: (808) 945-0040
FAX: (808) 945-0041

DATE	DRAWN	CHECK	FILE
	KY	KY	

SHEET

A1.0.3

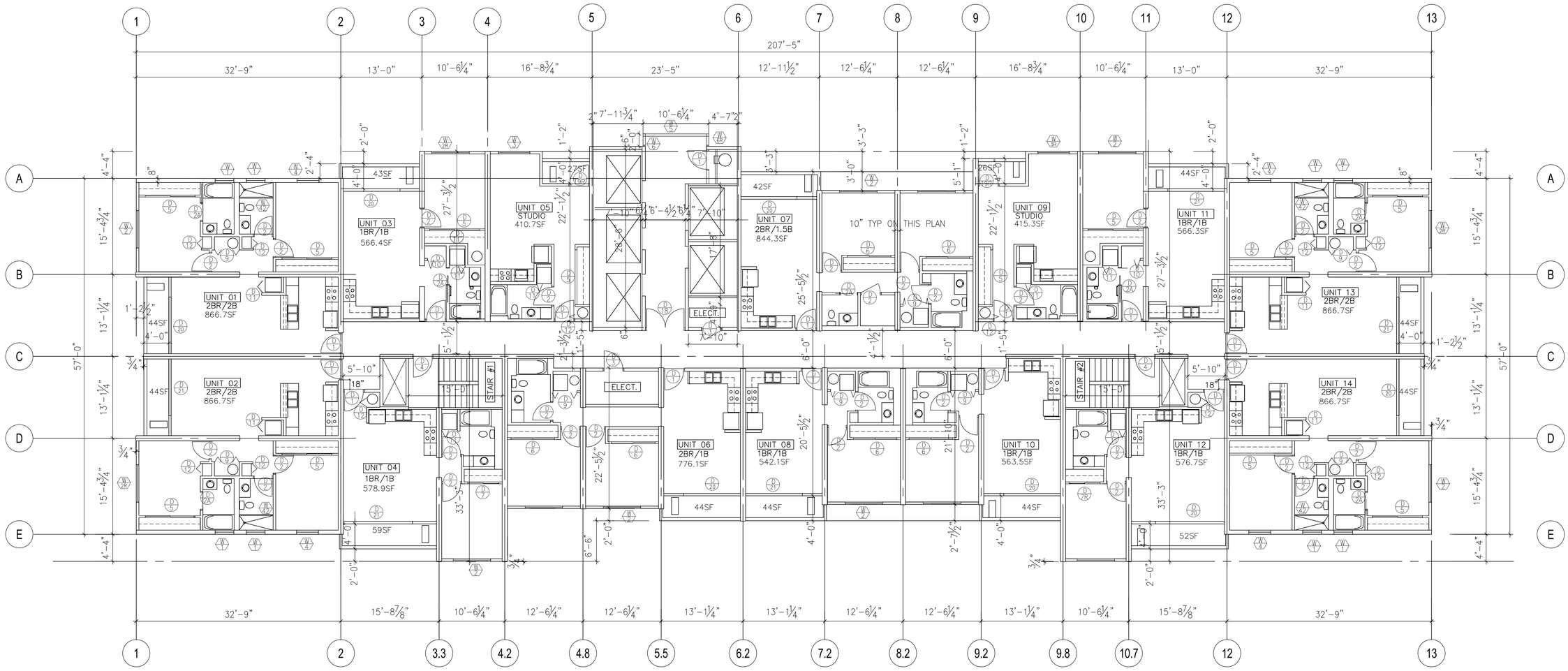

TYPICAL FLOOR PLAN – 2nd thru 8th

SCALE 1/8" = 1'-0"

FLOOR AREA=11,305.1SF

10/27/12

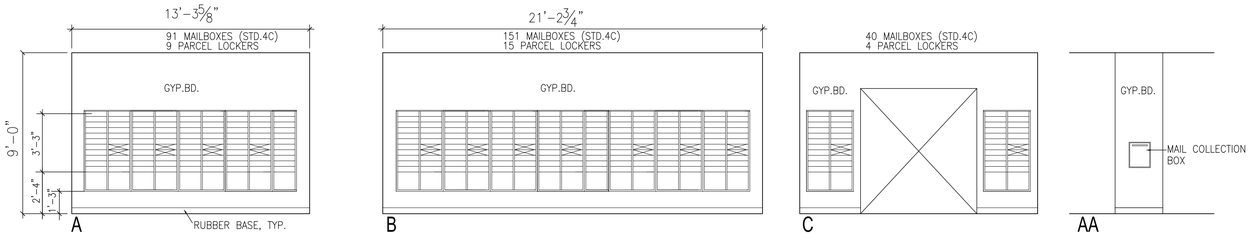

A / A1.1 MAILBOX DETAILS

SCALE:1/4"=1'-0"

TOTAL MAILBOX=655
TOTAL PARCEL LOCKERS=65
TOTAL MAIL COLLECTION BOX=1

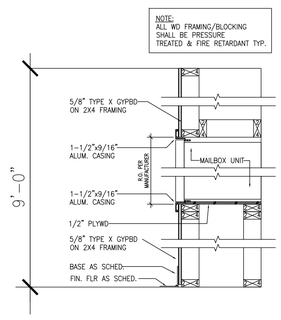

SECTION THRU MAILBOX

CENTER ISLAND SIMILAR, BACK TO BACK.

REVISIONS

NO.	DATE	
.	.	
.	.	
.	.	

KAZUTOSHI YATO
LICENSED PROFESSIONAL ARCHITECT
No.3271
HAWAII, U.S.A.
Expiration Date: 4/30/2014

THIS PROJECT WAS PREPARED BY ME OR UNDER MY SUPERVISION AND CONSTRUCTION OF THIS PROJECT WILL BE UNDER MY SUPERVISION.

KAKAAKO WORKFORCE HOUSING PER SUBCHAPTER 4 OF 2011 MAUKA PLAN AND RULES

801 SOUTH STREET
HONOLULU, HAWAII

TYPICAL FLOOR PLAN-(2ND THRU 8TH)

KAZU YATO, AIA & ASSOCIATES, INC.
2033 ROUNDTOP TERRACE
HONOLULU, HI 96822
TEL: (808) 945-0040
FAX: (808) 945-0041

DATE	DRAWN	CHECK	FILE
	AF	KY	

SHEET

A1.1

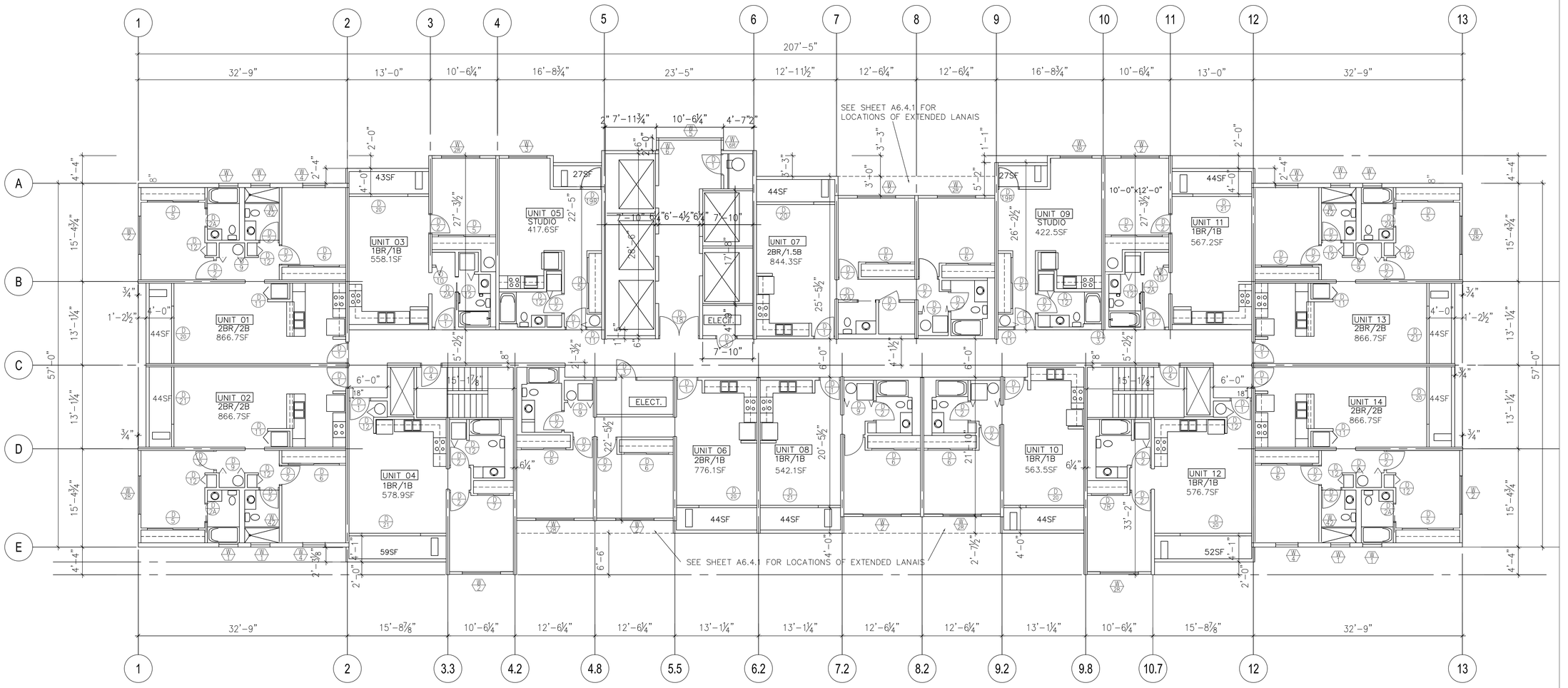

TYPICAL FLOOR PLAN – 9th thru 46th

SCALE 1/8" = 1'-0"

HCDA FLOOR AREA=11,293.2SF

10/31/12

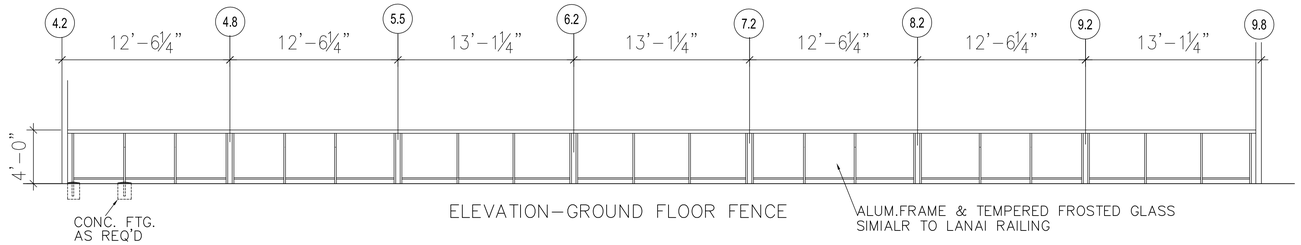

ELEVATION–GROUND FLOOR FENCE

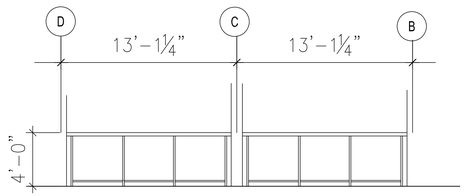

ELEVATION–GROUND FLOOR FENCE

A / A1.2 GROUND FLOOR FENCE

SCALE:3/16"=1'-0"

REVISIONS

NO.	DATE
.	.

KAZUTOSHI YATO
LICENSED PROFESSIONAL ARCHITECT
No. 3271
HAWAII, U.S.A.

Expiration Date: 4/30/2014

THIS PROJECT WAS PREPARED BY ME OR UNDER MY SUPERVISION AND CONSTRUCTION OF THIS PROJECT WILL BE UNDER MY SUPERVISION.

KAKAAKO WORKFORCE HOUSING PER SUBCHAPTER 4 OF 2011 MAUKA PLAN AND RULES

801 SOUTH STREET
HONOLULU, HAWAII

TYPICAL FLOOR PLAN-(2ND THRU 8TH)

KAZU YATO, AIA & ASSOCIATES,INC.
2033 ROUNDTOP TERRACE
HONOLULU, HI 96822
TEL: (808) 945-0040
FAX: (808) 945-0041

DATE	DRAWN	CHECK	FILE
	AF	KY	

SHEET

A1.2

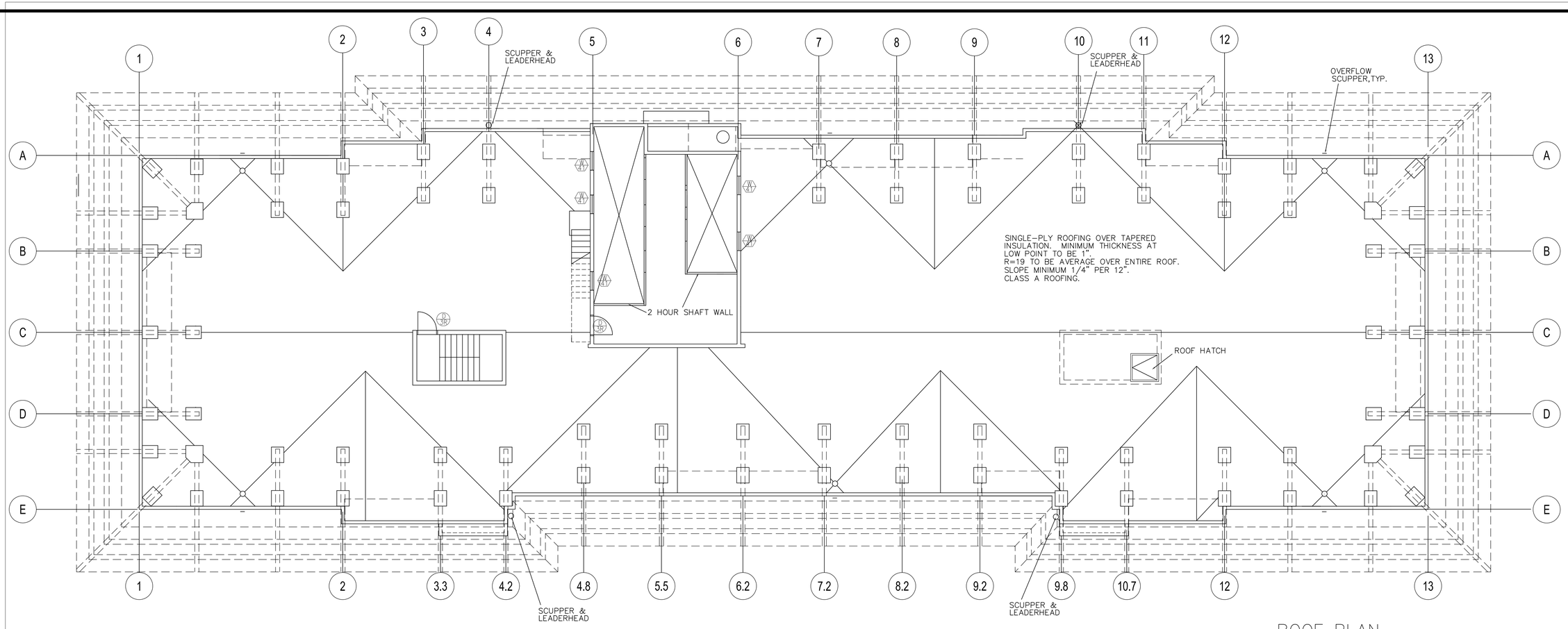

ROOF PLAN
SCALE 1/8" = 1'-0"
10/23/12

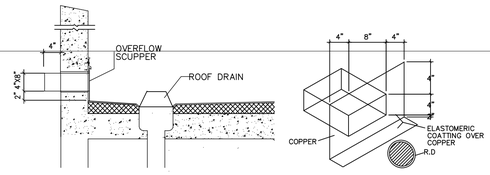

C A2.15 OVERFLOW SCUPPER
SCALE : 3/4"=1'-0"

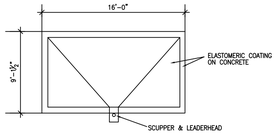

STAIR #1 ROOF PLAN
SCALE:1/8"=1'-0"

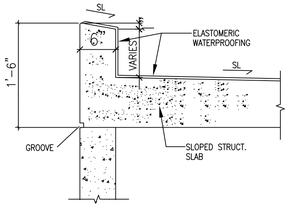

C A6.0.1 ROOF CURB
SCALE 1"=1'-0"

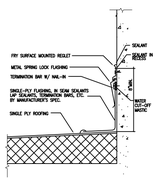

A A3.2 TYP. FLASHING
SCALE 3"=1'-0"

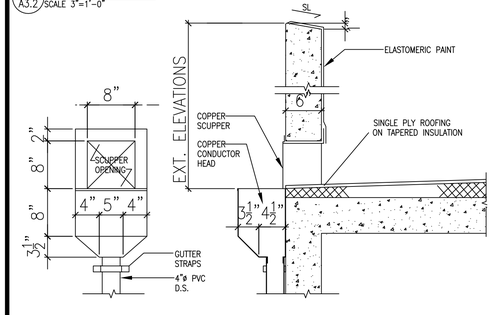

B A3.2 SCUPPER/LEADERHEAD
SCALE 1"=1'-0"

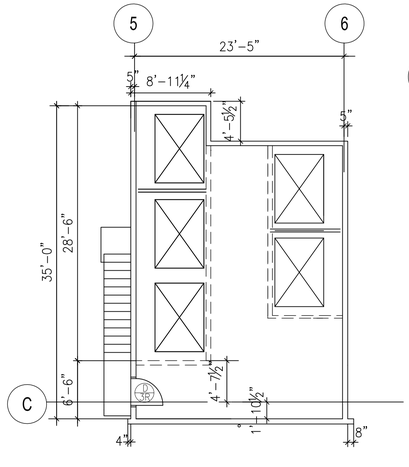

ELEVATOR MACHINE ROOM PLAN
SCALE:1/8"=1'-0"

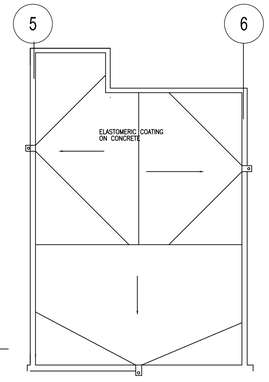

ELEVATOR MACHINE ROOM ROOF PLAN
SCALE:1/8"=1'-0"

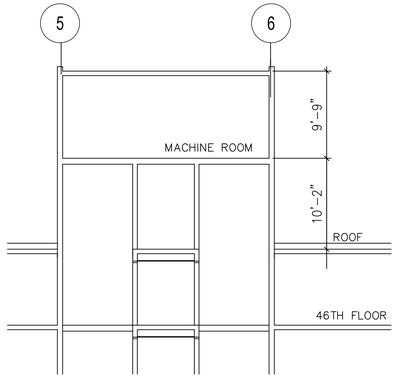

SECTION THRU ELEVATOR MACHINE ROOM
SCALE:1/8"=1'-0"

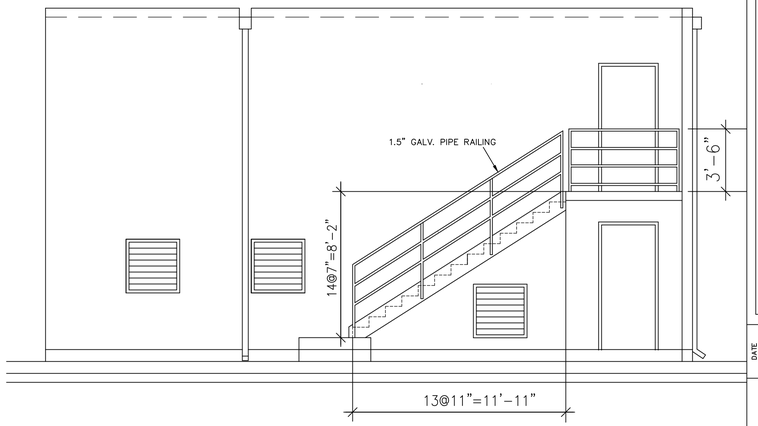

EXTERIOR ELEVATION– MACHINE ROOM
SCALE:1/4"=1'-0"

NO.	DATE	REVISIONS
.	.	.

KAZUTOSHI YATO
LICENSED PROFESSIONAL ARCHITECT
No. 3271
HAWAII, U.S.A.
Expiration Date: 4/30/2014

THIS PROJECT WAS PREPARED BY ME OR UNDER MY SUPERVISION AND I ACCEPT FULL RESPONSIBILITY FOR PROJECT WILL BE UNDER MY SUPERVISION.

KAKAAKO WORKFORCE HOUSING PER SUBCHAPTER 4 OF 2011 MAUKA PLAN AND RULES
801 SOUTH STREET
HONOLULU, HAWAII
ROOF PLAN

KAZU YATO, AIA & ASSOCIATES,INC.
2033 ROOFTOP TERRACE
HONOLULU, HI 96822
TEL: (808) 955-2040
FAX: (808) 945-2041

DATE	DRAWN	CHECK	FILE
	AF	KY	

SHEET
A1.3

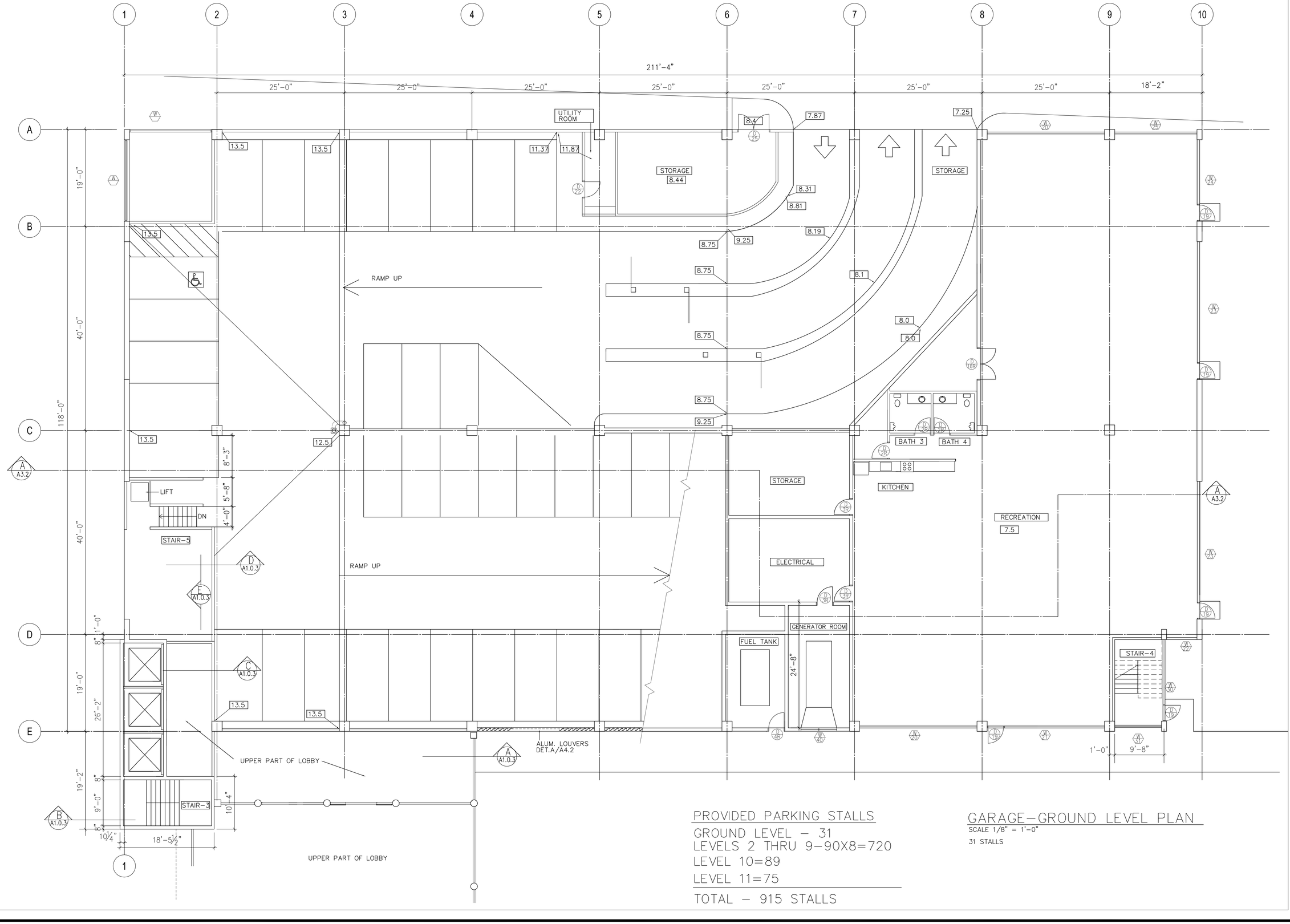

PROVIDED PARKING STALLS

GROUND LEVEL – 31
LEVELS 2 THRU 9–90X8=720
LEVEL 10=89
LEVEL 11=75

TOTAL – 915 STALLS

GARAGE–GROUND LEVEL PLAN

SCALE 1/8" = 1'-0"

31 STALLS

REVISIONS

NO.	DATE
.	.

KAZUTOSHI YATO
LICENSED PROFESSIONAL ARCHITECT
No. 3271
HAWAII, U.S.A.
Expiration Date: 4/30/2014

THIS PROJECT WAS PREPARED BY ME OR UNDER MY SUPERVISION AND CONSTRUCTION OF THIS PROJECT WILL BE UNDER MY SUPERVISION.

KAKAAKO WORKFORCE HOUSING PER SUBCHAPTER 4 OF 2011 MAUKA PLAN AND RULES

801 SOUTH STREET
HONOLULU, HAWAII

GARAGE GROUND LEVEL PLAN

KAZU YATO, AIA & ASSOCIATES, INC.
2033 ROUNDTOP TERRACE
HONOLULU, HI 96822
TEL: (808) 945-0040
FAX: (808) 945-0041

DATE	DRAWN	CHECK	FILE
	AF	KY	

SHEET

A1.4

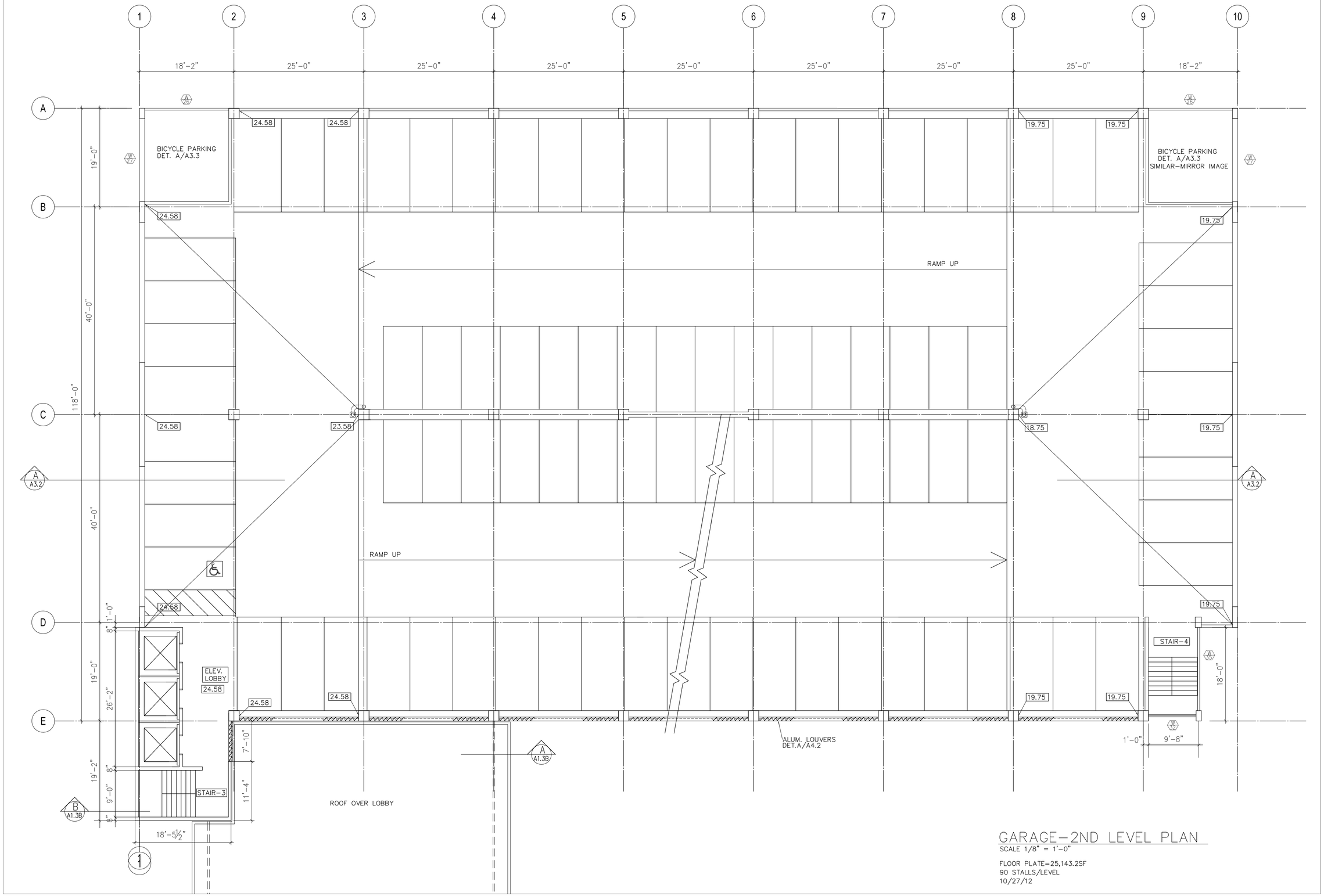

GARAGE-2ND LEVEL PLAN

SCALE 1/8" = 1'-0"

FLOOR PLATE=25,143.2SF
90 STALLS/LEVEL
10/27/12

NO. | DATE | REVISIONS

KAZUTOSHI YATO
LICENSED PROFESSIONAL ARCHITECT
No. 3271
HAWAII, U.S.A.
Expiration Date: 4/30/2014

THIS PROJECT WAS PREPARED BY ME OR UNDER MY SUPERVISION AND CONSTRUCTION OF THIS PROJECT WILL BE UNDER MY SUPERVISION.

KAKAAKO WORKFORCE HOUSING PER
SUBCHAPTER 4 OF 2011 MAUKA PLAN AND RULES

801 SOUTH STREET
HONOLULU, HAWAII

GARAGE- 2ND LEVEL PLAN

KAZU YATO, AIA & ASSOCIATES,INC.
2233 ROUNDTOP TERRACE
HONOLULU, HI 96822
TEL: (808) 945-4040
FAX: (808) 955-0052

DATE
DRAWN AF
CHECK KY
FILE

SHEET

A1.4.1

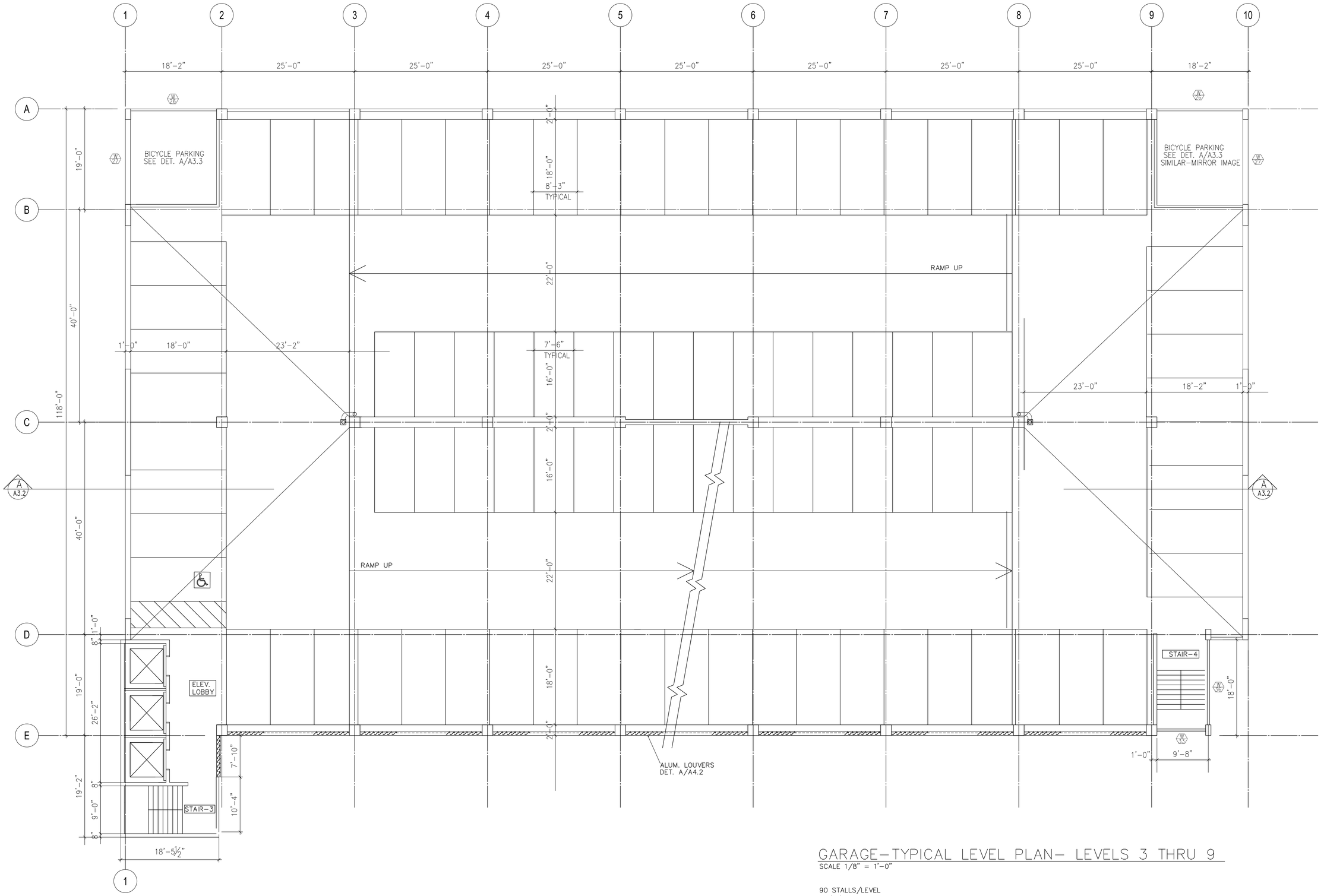

GARAGE-TYPICAL LEVEL PLAN- LEVELS 3 THRU 9

SCALE 1/8" = 1'-0"

90 STALLS/LEVEL
10/5/12

REVISIONS

NO.	DATE
.	.

KAZUTOSHI YATO
LICENSED PROFESSIONAL ARCHITECT
No. 3271
HAWAII, U.S.A.
Expiration Date: 4/30/2014

THIS PROJECT WAS PREPARED BY ME OR UNDER MY SUPERVISION AND CONSTRUCTION OF THIS PROJECT WILL BE UNDER MY SUPERVISION.

KAKAAKO WORKFORCE HOUSING PER SUBCHAPTER 4 OF 2011 MAUKA PLAN AND RULES

801 SOUTH STREET
HONOLULU, HAWAII

GARAGE TYPICAL LEVEL PLAN

KAZU YATO, AIA & ASSOCIATES, INC.
2033 ROUNDTOP TERRACE
HONOLULU, HI 96822
TEL: (808) 945-0040
FAX: (808) 955-0052

DATE	DRAWN	CHECK	FILE
	AF	KY	

SHEET

A1.5

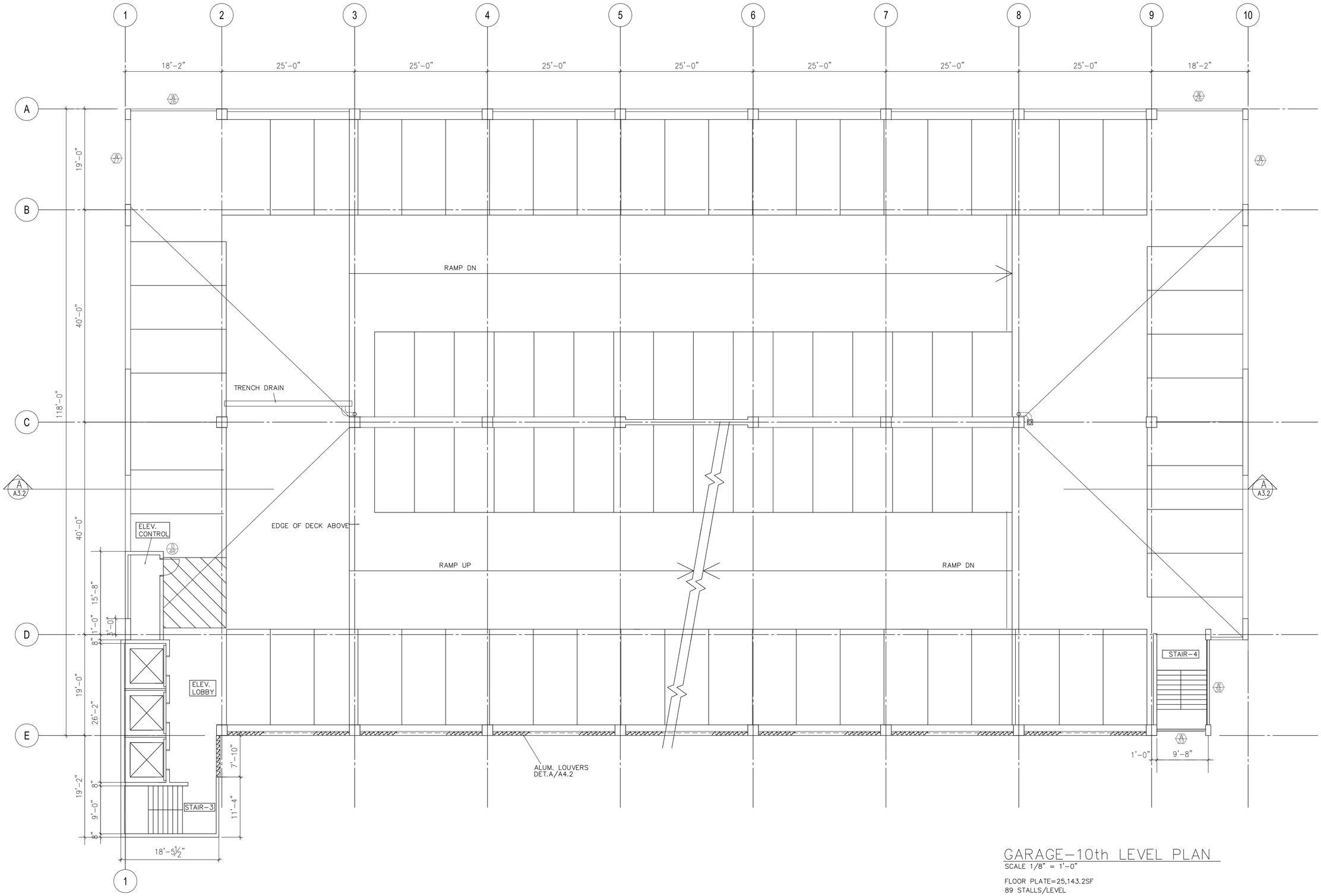

GARAGE–10th LEVEL PLAN

SCALE 1/8" = 1'–0"

FLOOR PLATE=25,143.2SF
89 STALLS/LEVEL

NO.	DATE	REVISIONS
.	.	.

KAZUTOSHI YATO
LICENSED PROFESSIONAL ARCHITECT
No.3271
HAWAII, U.S.A.
Expiration Date: 4/30/2014

THIS PROJECT WAS PREPARED BY ME OR UNDER MY SUPERVISION AND CONSTRUCTION OF THIS PROJECT WILL BE UNDER MY SUPERVISION.

KAKAAKO WORKFORCE HOUSING PER SUBCHAPTER 4 OF 2011 MAUKA PLAN AND RULES

801 SOUTH STREET
HONOLULU, HAWAII

GARAGE 10TH LEVEL PLAN

KAZU YATO, AIA & ASSOCIATES,INC.
2033 ROUNDTOP TERRACE
HONOLULU, HI 96822
TEL: (808) 945-0040
FAX: (808) 955-0032

DATE	DRAWN	CHECK	FILE
	AF	KY	

SHEET

A1.5.1

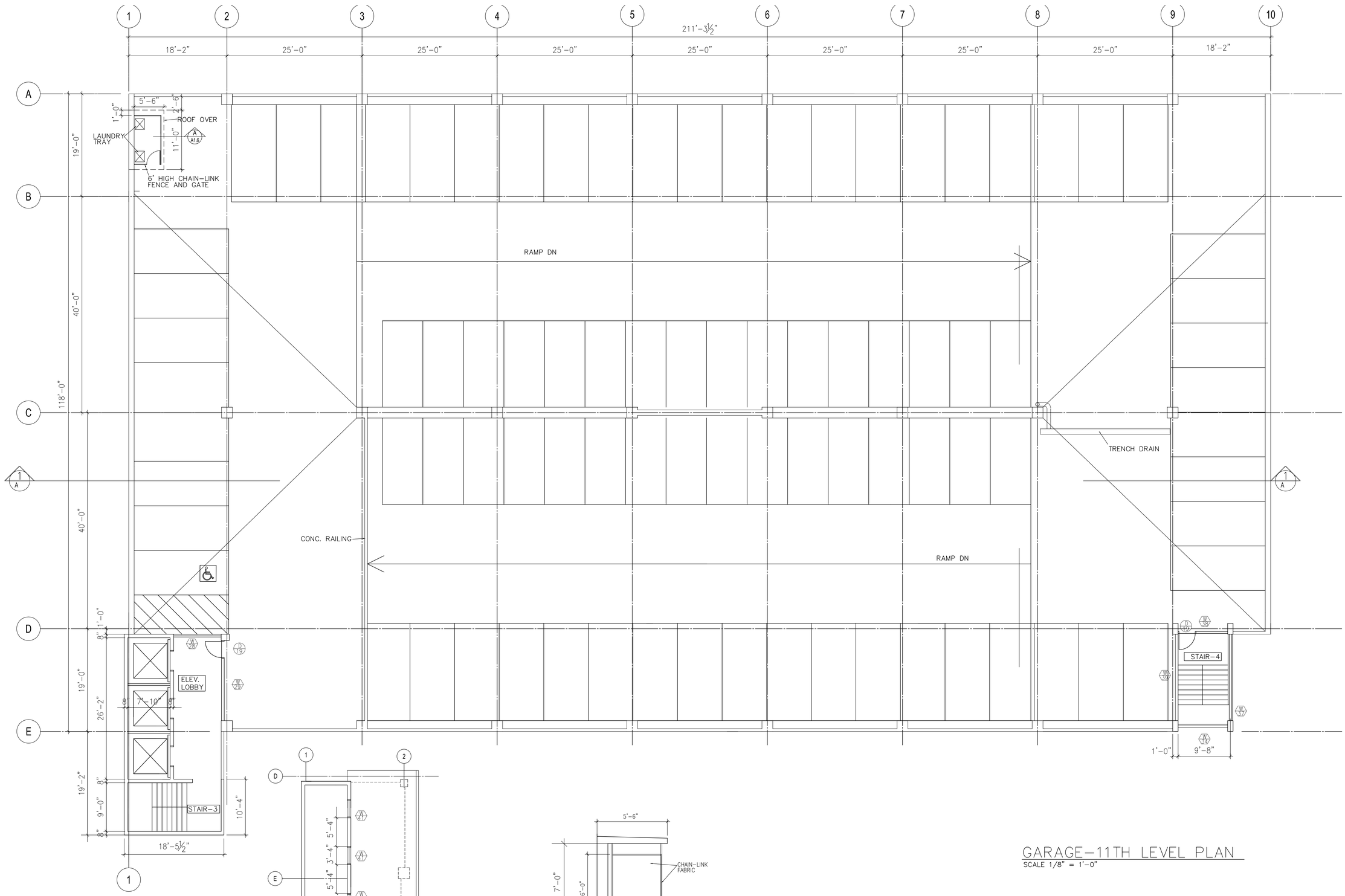

PLAN @ TOP OF ELEVATOR HOISTWAY
SCALE 1/8" = 1'-0"

SEE ROOF PLAN ON SHEET A6.0.1

A / A1.6 SECTION

GARAGE–11TH LEVEL PLAN

SCALE 1/8" = 1'-0"

NO.	DATE	REVISIONS
.	.	.

KAZUTOSHI YATO — LICENSED PROFESSIONAL ARCHITECT — No. 3271 — HAWAII, U.S.A.

Expiration Date: 4/30/2014

THIS PROJECT WAS PREPARED BY ME OR UNDER MY SUPERVISION AND CONSTRUCTION OF THIS PROJECT WILL BE UNDER MY SUPERVISION.

KAKAAKO WORKFORCE HOUSING PER
SUBCHAPTER 4 OF 2011 MAUKA PLAN AND RULES

801 SOUTH STREET
HONOLULU, HAWAII

GARAGE 11TH LEVEL PLAN

KAZU YATO, AIA & ASSOCIATES,INC.
2033 ROUNDTOP TERRACE
HONOLULU, HI 96822
TEL: (808) 945-0040
FAX: (808) 955-0052

DATE	DRAWN	CHECK	FILE
	AF	KY	

SHEET

A1.6

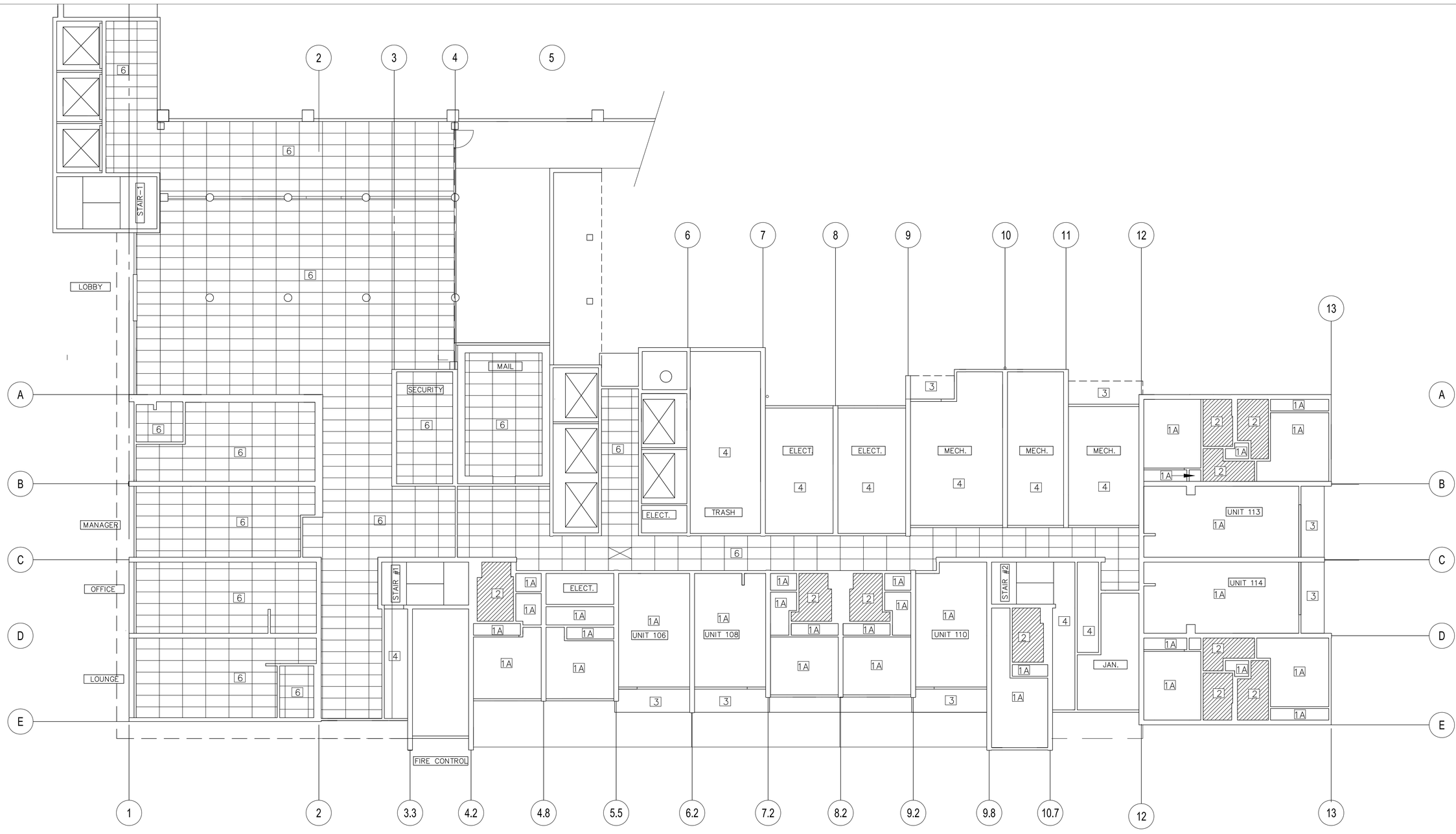

GROUND FLOOR REFLECTED CEILING PLAN

SCALE 1/8" = 1'-0"

10/23/12

1A SIMULATED ACOUSTIC SPRAY ON SUSPENDED GYP.BD. @ 9'-0"
2 PAINTED GYP.BD. CEILING @ 7'-2" AFF.
3 CONCRETE-PAINTED
4 CONCRETE-NO FINISH
5 GYP.BD. SOFFIT
6 LAY-IN ACOUSTICAL CEILING @ 9'-0" AFF @CORRIDOR,LOBBY
8'-0" AFF @ OFFICES

REVISIONS

NO.	DATE
.	.

KAZUTOSHI YATO
LICENSED PROFESSIONAL ARCHITECT
No.3271
HAWAII, U.S.A.
Expiration Date: 4/30/2014

THIS PROJECT WAS PREPARED BY ME OR UNDER MY SUPERVISION AND CONSTRUCTION OF THIS PROJECT WILL BE UNDER MY SUPERVISION.

KAKAAKO WORKFORCE HOUSING PER
SUBCHAPTER 4 OF 2011 MAUKA PLAN AND RULES

801 SOUTH STREET
HONOLULU, HAWAII

GROUND FLOOR REFLECTED CEILING PLAN

KAZU YATO, AIA & ASSOCIATES,INC.
2033 ROUNDTOP TERRACE
HONOLULU, HI 96822
TEL: (808) 945-0040
FAX: (808) 945-0041

DATE	DRAWN	CHECK	FILE
	KY	KY	

SHEET

A1.7

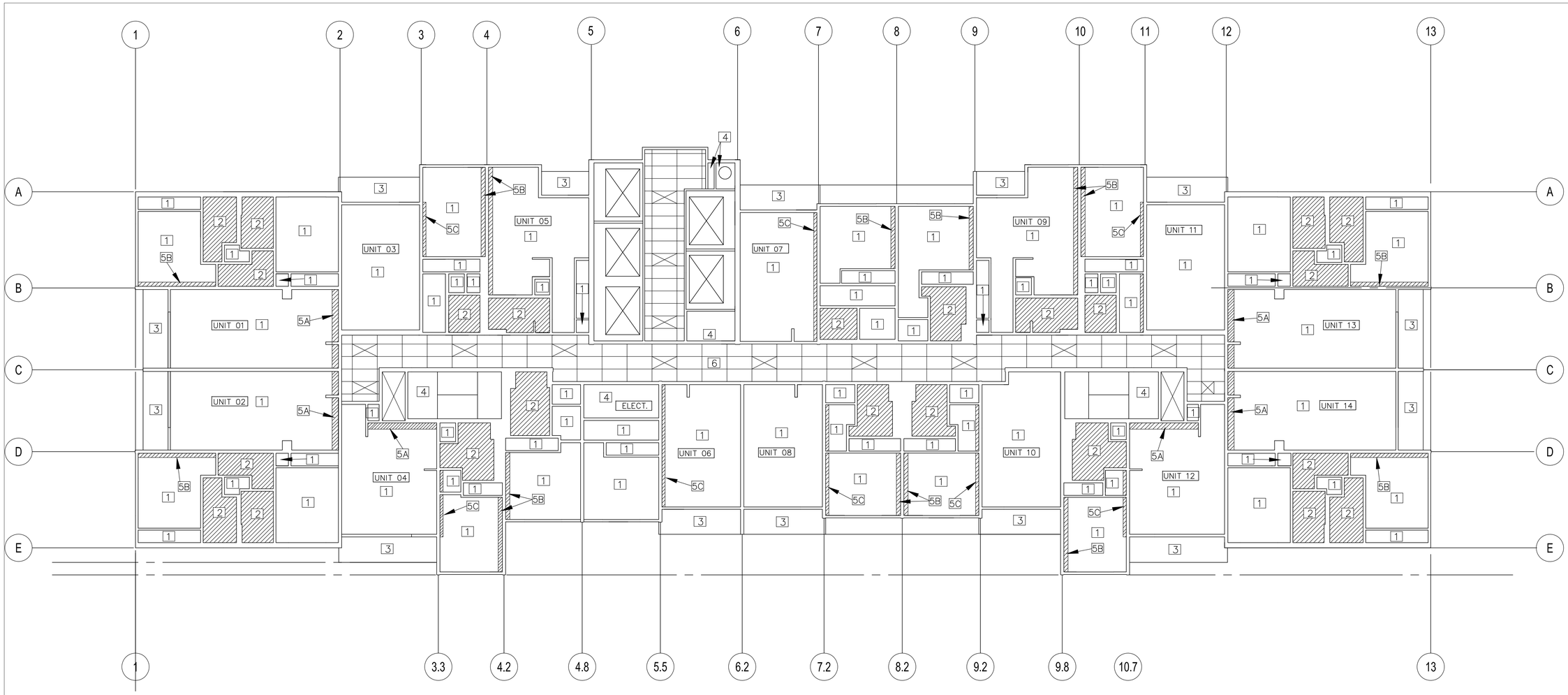

TYPICAL FLOOR REFLECTED CEILING PLAN

SCALE 1/8" = 1'-0"
9/7/12

1. SIMULATED ACOUSTIC SPRAY ON CONCRETE
2. PAINTED GYP.BD. CEILING @ 7'-2" AFF.
3. CONCRETE-PAINTED
4. CONCRETE-NO FINISH
5. GYP.BD. SOFFIT -SEE A/A1.8
6. LAY-IN ACOUSTICAL CEILING

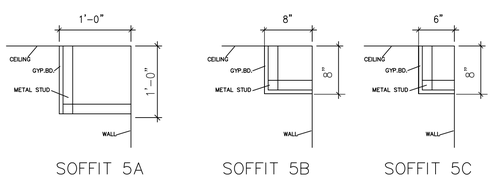

SOFFIT 5A SOFFIT 5B SOFFIT 5C

A SOFFIT DETAILS
A1.8

NO.	DATE	REVISIONS
.	.	.

KAZUTOSHI YATO
LICENSED PROFESSIONAL ARCHITECT
No. 3271
HAWAII, U.S.A.
Expiration Date: 4/30/2014

THIS PROJECT WAS PREPARED BY ME OR UNDER MY SUPERVISION AND CONSTRUCTION OF THIS PROJECT WILL BE UNDER MY SUPERVISION.

KAKAAKO WORKFORCE HOUSING PER SUBCHAPTER 4 OF 2011 MAUKA PLAN AND RULES

801 SOUTH STREET
HONOLULU, HAWAII

TYPICAL FLOOR REFLECTED CEILING PLAN

KAZU YATO, AIA & ASSOCIATES, INC.
2033 ROUNDTOP TERRACE
HONOLULU, HI 96822
TEL: (808) 945-0040
FAX: (808) 945-0041

DATE	DRAWN	CHECK	FILE
	KY	KY	

SHEET

A1.8

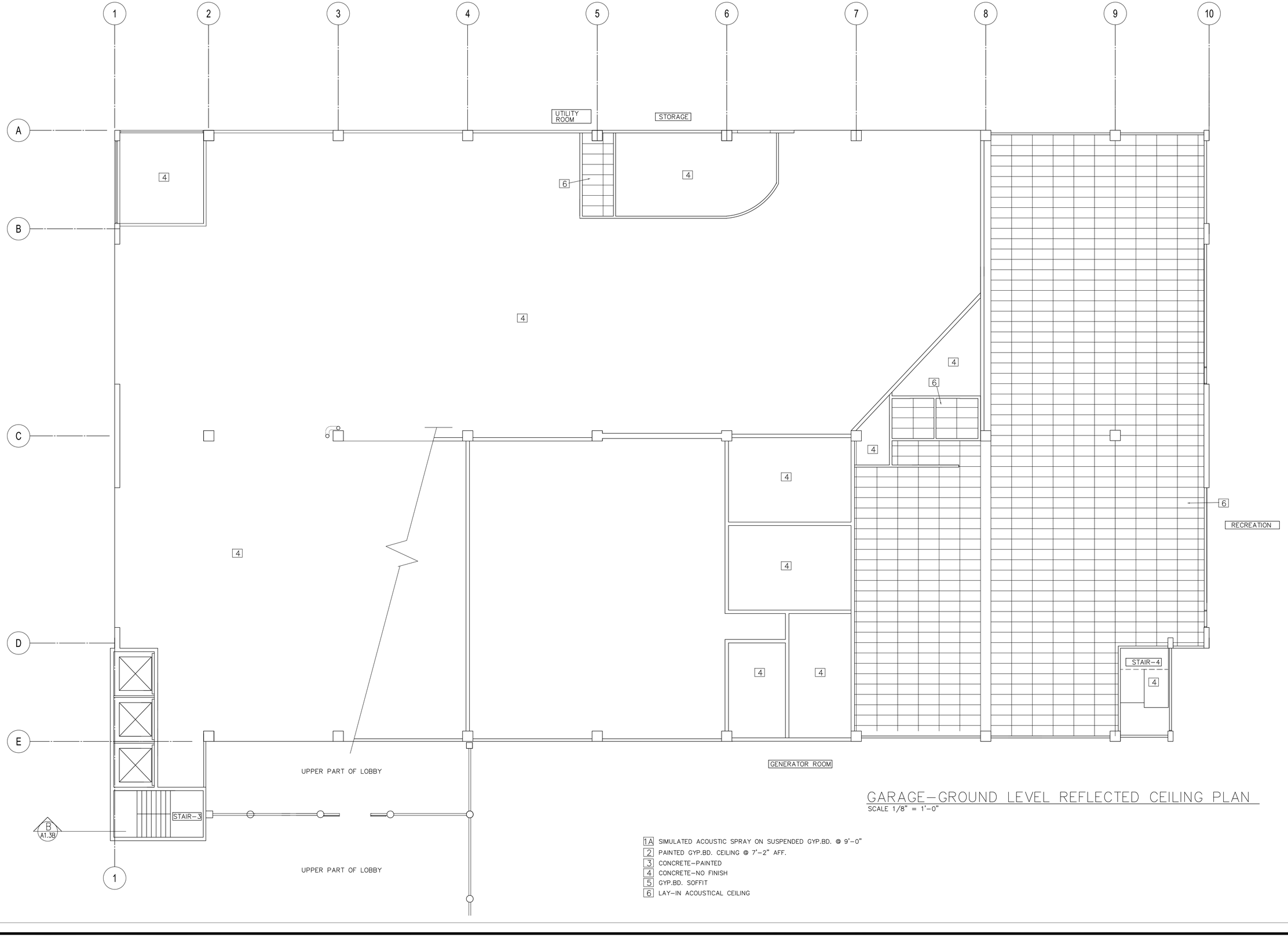

GARAGE-GROUND LEVEL REFLECTED CEILING PLAN

SCALE 1/8" = 1'-0"

1A SIMULATED ACOUSTIC SPRAY ON SUSPENDED GYP.BD. @ 9'-0"
2 PAINTED GYP.BD. CEILING @ 7'-2" AFF.
3 CONCRETE-PAINTED
4 CONCRETE-NO FINISH
5 GYP.BD. SOFFIT
6 LAY-IN ACOUSTICAL CEILING

REVISIONS

NO.	DATE
.	.

AZUTOSHI YATO
LICENSED PROFESSIONAL ARCHITECT
No. 3271
HAWAII, U.S.A.
Expiration Date: 4/30/2014

THIS PROJECT WAS PREPARED BY ME OR UNDER MY SUPERVISION AND CONSTRUCTION OF THIS PROJECT WILL BE UNDER MY SUPERVISION.

KAKAAKO WORKFORCE HOUSING PER SUBCHAPTER 4 OF 2011 MAUKA PLAN AND RULES

801 SOUTH STREET
HONOLULU, HAWAII

GARAGE GROUND LEVEL REFLECTED CEILING PLAN

KAZU YATO, AIA & ASSOCIATES, INC.
2033 ROUNDTOP TERRACE
HONOLULU, HI 96822
TEL: (808) 945-0040
FAX: (808) 945-1041

DATE	DRAWN	CHECK	FILE
	KY	KY	

SHEET

A1.9

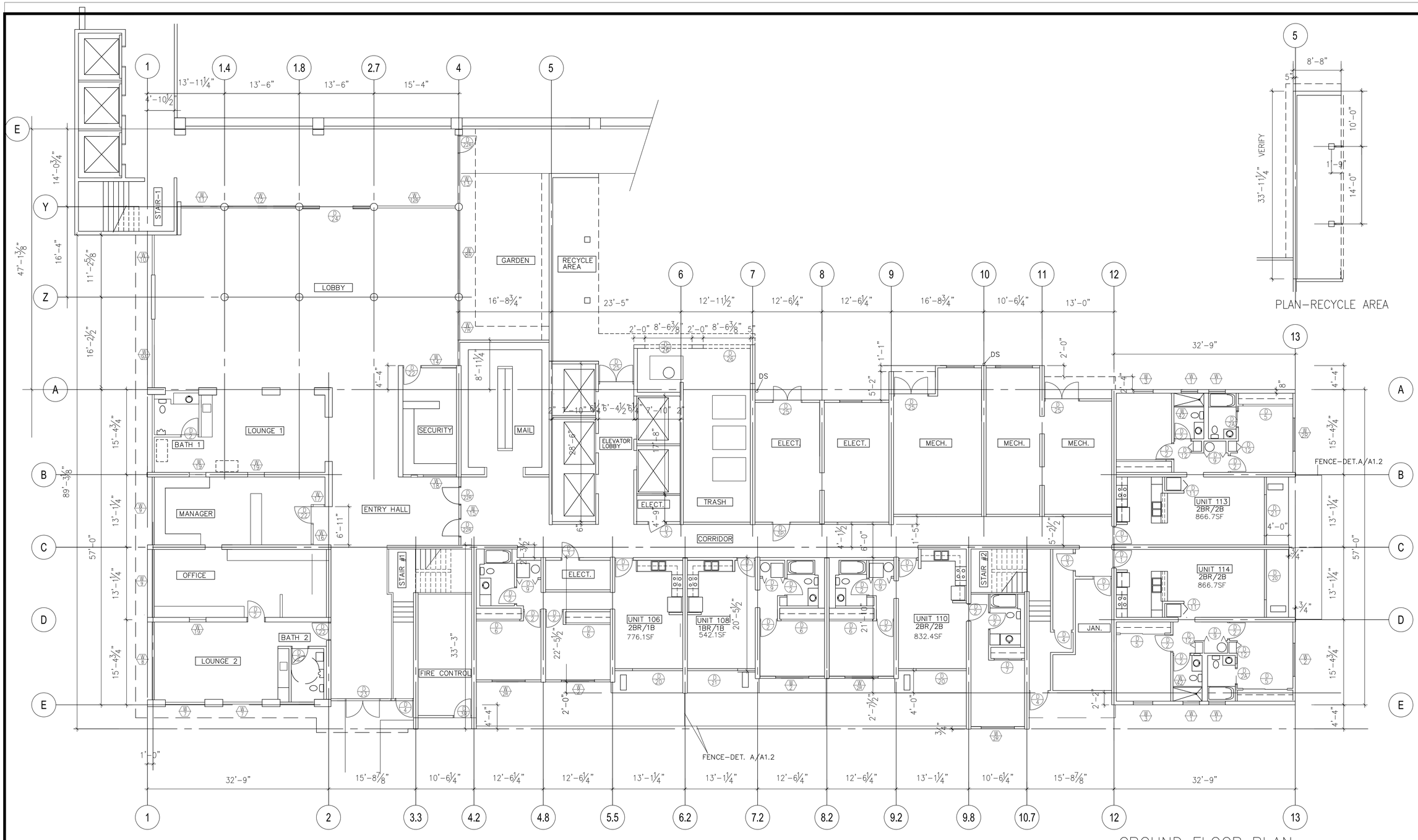

GROUND FLOOR PLAN

SCALE 1/8" = 1'-0"

FLOOR AREA=12,878.9SF

10/27/12

PLAN-RECYCLE AREA

NO.	DATE	REVISIONS
.	.	.

KAZUTOSHI YATO
LICENSED PROFESSIONAL ARCHITECT
No.3271
HAWAII, U.S.A.

Expiration Date: 4/30/2014

THIS PROJECT WAS PREPARED BY ME OR UNDER MY SUPERVISION AND CONSTRUCTION OF THIS PROJECT WILL BE UNDER MY SUPERVISION.

KAKAAKO WORKFORCE HOUSING

SUBCHAPTER 4 OF 2011 MAUKA PLAN AND RULES

801 SOUTH STREET
HONOLULU, HAWAII

GROUND FLOOR PLAN

KAZU YATO, AIA & ASSOCIATES,INC.
2033 ROUNDTOP TERRACE
HONOLULU, HI 98822
TEL: (808) 945-0040
FAX: (808) 945-0041

DATE	DRAWN	CHECK	FILE
	AF	KY	

SHEET

A1.0

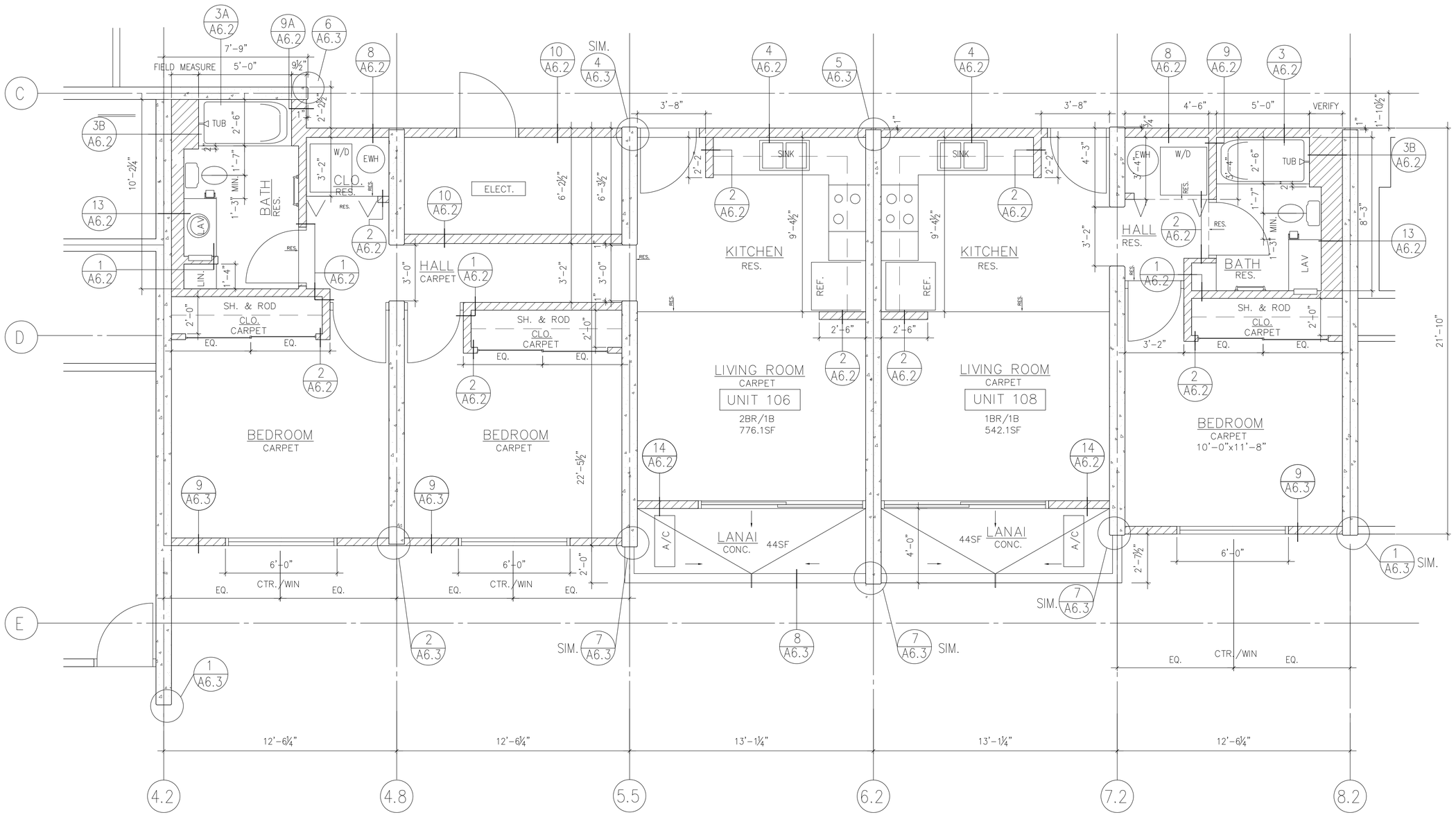

GROUND FLOOR UNIT PLANS – 106 AND 108

SCALE: 3/8"=1'-0"

OCT. 19, 2012

N

REVISIONS

NO.	DATE
.	.

KAZUTOSHI YATO
LICENSED PROFESSIONAL ARCHITECT
No. 3271
HAWAII, U.S.A.
Expiration Date: 4/30/2014

THIS PROJECT WAS PREPARED BY ME OR UNDER MY SUPERVISION AND CONSTRUCTION OF THIS PROJECT WILL BE UNDER MY SUPERVISION.

KAKAAKO WORKFORCE HOUSING
SUBCHAPTER 4 OF 2011 MAUKA PLAN AND RULES

801 SOUTH STREET
HONOLULU, HAWAII

GROUND UNIT PLANS (106/108)

KAZU YATO, AIA & ASSOCIATES, INC.
2033 ROUNDTOP TERRACE
HONOLULU, HI 96822
TEL: (808) 945-0040
FAX: (808) 945-0041

DATE	DRAWN	CHECK	FILE
	AF	KY	

SHEET

A2.0

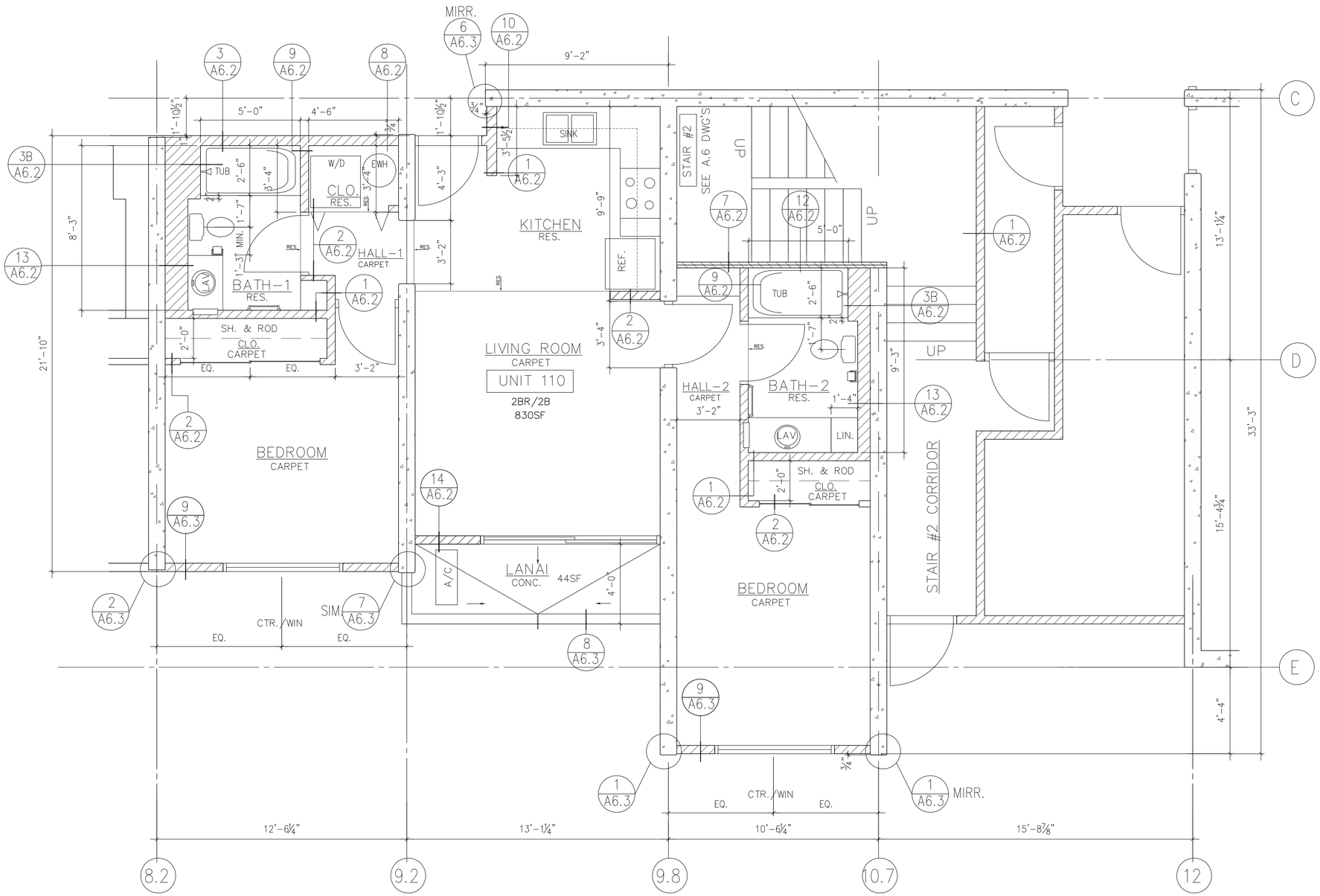

GROUND FLOOR UNIT PLAN – 110

SCALE: 3/8"=1'-0"

OCT. 19, 2012

N

NO.	DATE	REVISIONS
.	.	.

AZUTOSHI YATO
LICENSED PROFESSIONAL ARCHITECT
No. 3271
HAWAII, U.S.A.

Expiration Date: 4/30/2014

THIS PROJECT WAS PREPARED BY ME OR UNDER MY SUPERVISION AND CONSTRUCTION OF THIS PROJECT WILL BE UNDER MY SUPERVISION.

KAKAAKO WORKFORCE HOUSING PER
SUBCHAPTER 4 OF 2011 MAUKA PLAN AND RULES

801 SOUTH STREET
HONOLULU, HAWAII

GROUND UNIT PLANS- 110

KAZU YATO, AIA & ASSOCIATES, INC.
2033 ROOKTOP TERRACE
HONOLULU, HI 96822
TEL: (808) 945-0040
FAX: (808) 945-0041

DATE	DRAWN	CHECK	FILE
	AF	KY	

SHEET

A2.1

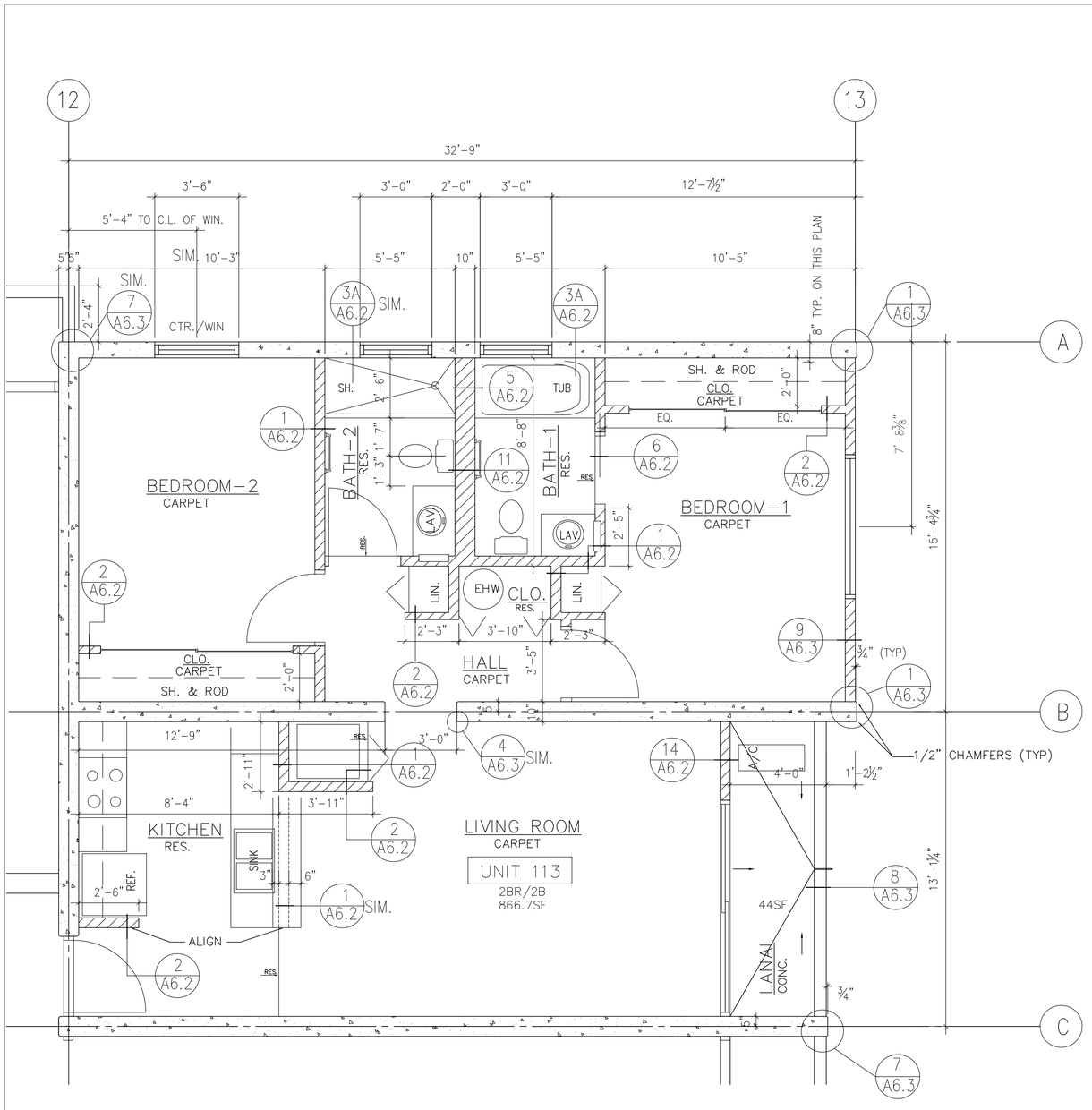

GROUND FLOOR UNIT PLAN–113

SCALE: 3/8"=1'–0"

OCT. 19, 2012

N

ROOM FINISH SCHEDULE

	ROOM	FLOOR	BASE	WALL	CEILING	REMARKS
TYPICAL UNITS	LIVING/DINING	CARPET	NONE	CONC./GYP.BD.	SIM.ACOUST.SPRAY	
	KITCHEN	RESILIENT	RUBBER	CONC./GYP.BD.	SIM.ACOUST.SPRAY	
	BEDROOM	CARPET	NONE	CONC./GYP.BD.	SIM.ACOUST.SPRAY	
	BATHROOM	RESILIENT	RUBBER	GYP.BD./TILE	GYP.BD.	
	COAT CLOSET	CARPET	NONE	CONC./GYP.BD.	SIM.ACOUST.SPRAY	
	STORAGE	CARPET	NONE	CONC./GYP.BD.	SIM.ACOUST.SPRAY	
	CLOSET WASHER/DRYER WATER HEATER	RESILIENT	RUBBER	CONC./GYP.BD.	SIM.ACOUST.SPRAY	
TYPICAL FLOOR	CORRIDOR	CARPET	RUBBER	CONC./GYP.BD.	ACOUSTICAL LAY–IN	
	ELEVATOR LOBBY	CARPET	RUBBER	CONC./GYP.BD.	ACOUSTICAL LAY–IN	
	ELECTRICAL RM.	CONCRETE *	NONE	CONC./GYP.BD. *	CONCRETE *	* NO PAINT ON CONCRETE
	STAIRWELL	STEEL/CONC. *	NONE	CONC./GYP.BD.	STEEL/CONC. *	* NO PAINT
GROUND FLOOR	LOBBY	CERAMIC TILE	CERAMIC TILE	CONC./GYP.BD.	ACOUSTICAL LAY–IN	
	LOUNGE #1	CERAMIC TILE	CERAMIC TILE	CONC./GYP.BD.	ACOUSTICAL LAY–IN	
	BATHROOM #1	CERAMIC TILE	CERAMIC TILE	CONC./GYP.BD.	ACOUSTICAL LAY–IN	
	MANAGER	CARPET	RUBBER	CONC./GYP.BD.	ACOUSTICAL LAY–IN	
	OFFICE	CARPET	RUBBER	CONC./GYP.BD.	ACOUSTICAL LAY–IN	
	LOUNGE #2	CARPET	RUBBER	CONC./GYP.BD.	ACOUSTICAL LAY–IN	
	ENTRY HALL	CERAMIC TILE	CERAMIC TILE	CONC./GYP.BD.	ACOUSTICAL LAY–IN	
	CORRIDOR	CERAMIC TILE	CERAMIC TILE	CONC./GYP.BD.	ACOUSTICAL LAY–IN	
	SECURITY	CERAMIC TILE	CERAMIC TILE	CONC./GYP.BD.	ACOUSTICAL LAY–IN	
	MAIL	CERAMIC TILE	CERAMIC TILE	GYP.BD.	ACOUSTICAL LAY–IN	
	FIRE CONTROL	CONCRETE *	NONE	CONC.*	CONCRETE *	* NO PAINT ON CONCRETE
	STAIR #1					
	ELEVATOR LOBBY	CERAMIC TILE	CERAMIC TILE	CONC./GYP.BD.		
	TRASH	CONCRETE *	NONE	CONC./GYP.BD.	CONCRETE *	* NO PAINT
	ELECTRICAL	CONCRETE *	NONE	CONC./GYP.BD.	CONCRETE *	* NO PAINT
	MECHANICAL	CONCRETE *	NONE	CONC./GYP.BD.	CONCRETE *	* NO PAINT
	STAIR #2	CONCRETE/STEEL *	NONE	CONC./GYP.BD.	CONCRETE *	* NO PAINT
	JANITOR	CONCRETE *	RUBBER	CONC./GYP.BD.	CONCRETE *	* NO PAINT
GARAGE	RECREATION ROOM	RESILIENT	RUBBER	CONC./GYP.BD.	ACOUSTICAL LAY–IN	
	BATHROOM	CERAMIC TILE	CERAMIC TILE	CONC./GYP.BD./TILE	ACOUSTICAL LAY–IN	
	GENERATOR ROOM	CONCRETE *	NONE	CONC./CMU	CONCRETE *	* NO PAINT
	FUEL ROOM	CONCRETE *	NONE	CONC./CMU	CONCRETE *	* NO PAINT
	ELCTRICAL	CONCRETE *	NONE	CONC./CMU	CONCRETE *	* NO PAINT
	STORAGE	CONCRETE *	NONE	CONC./CMU	CONCRETE *	* NO PAINT
	UTILITY ROOM	CONCRETE *	NONE	CONC./CMU	CONCRETE *	* NO PAINT
	STAIRS	CONCRETE *	NONE	CONC./CMU	CONCRETE *	* NO PAINT
	ELEVATOR LOBBY	CONCRETE *	NONE	CONC./CMU	CONCRETE *	* NO PAINT
	BICYCLE PARKING	CONCRETE *	NONE	GLASS/CHAIN LINK*	CONCRETE *	* NO PAINT

REVISIONS

NO.	DATE
.	.

KAZUTOSHI YATO
LICENSED PROFESSIONAL ARCHITECT
No. 3271
HAWAII, U.S.A.
Expiration Date: 4/30/2014

THIS PROJECT WAS PREPARED BY ME OR UNDER MY SUPERVISION AND CONSTRUCTION OF THIS PROJECT WILL BE UNDER MY SUPERVISION.

KAKAAKO WORKFORCE HOUSING PER
SUBCHAPTER 4 OF 2011 MAUKA PLAN AND RULES

801 SOUTH STREET
HONOLULU, HAWAII

GROUND UNIT PLANS- 113

KAZU YATO, AIA & ASSOCIATES, INC.
2033 ROUNDTOP TERRACE
HONOLULU, HI 96822
TEL: (808) 945-0040
FAX: (808) 955-0052

DATE	DRAWN	CHECK	FILE
	AF	KY	

SHEET

A2.2

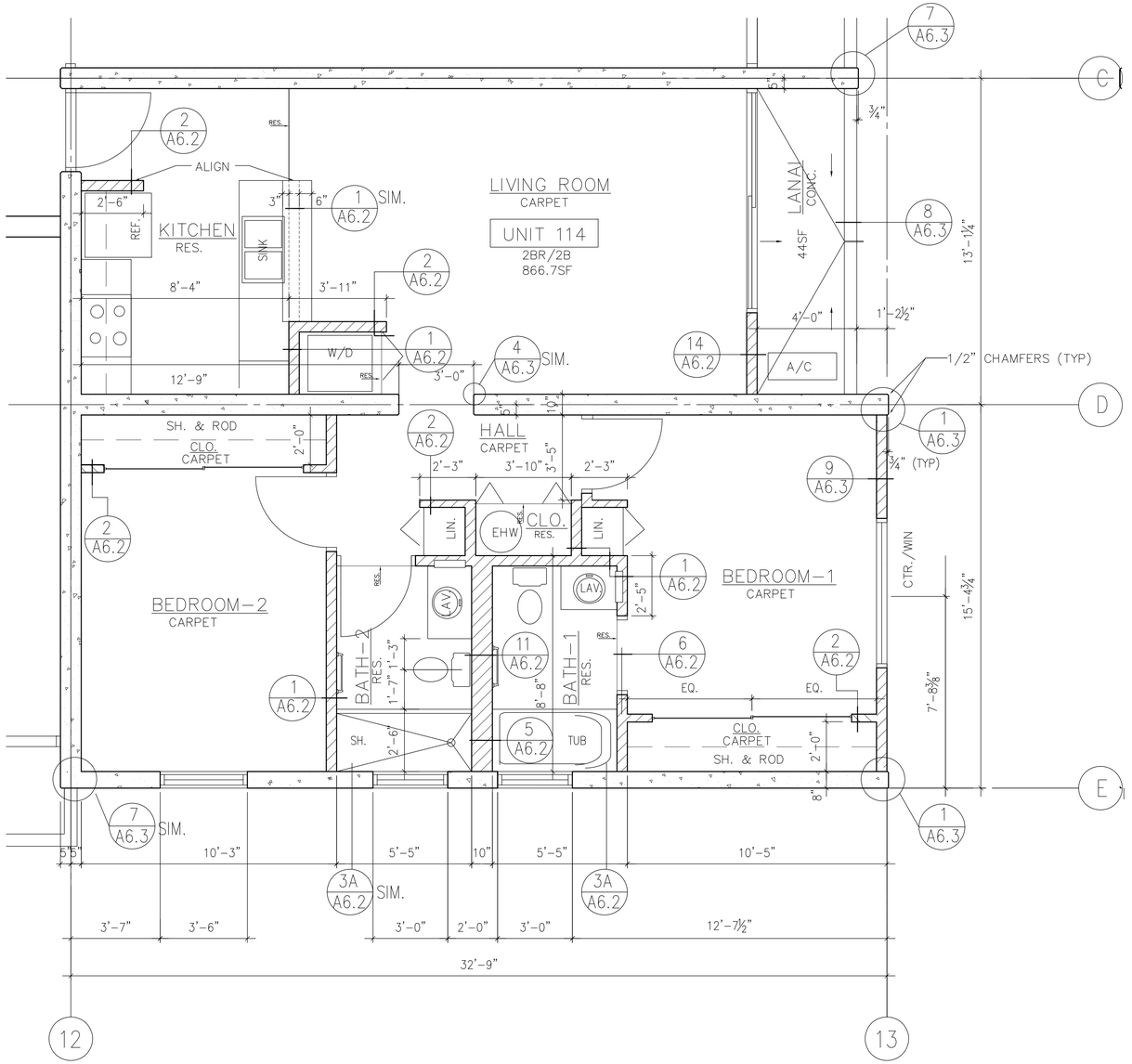

GROUND FLOOR UNIT PLAN–114

SCALE: 3/8"=1'-0"

Oct. 19, 2012

N

REVISIONS

NO.	DATE
.	.

KAZUTOSHI YATO — LICENSED PROFESSIONAL ARCHITECT — No.3271 — HAWAII, U.S.A.

Expiration Date: 4/30/2014

THIS PROJECT WAS PREPARED BY ME OR UNDER MY SUPERVISION AND CONSTRUCTION OF THIS PROJECT WILL BE UNDER MY SUPERVISION.

KAKAAKO WORKFORCE HOUSING PER

SUBCHAPTER 4 OF 2011 MAUKA PLAN AND RULES

801 SOUTH STREET
HONOLULU, HAWAII

GROUND UNIT PLAN (114)

KAZU YATO, AIA & ASSOCIATES,INC.

2033 ROUNDTOP TERRACE
HONOLULU, HI 96822

TEL: (808) 945-0040
FAX: (808) 945-0041

DATE	DRAWN	CHECK	FILE
	AF	KY	

SHEET

A2.3

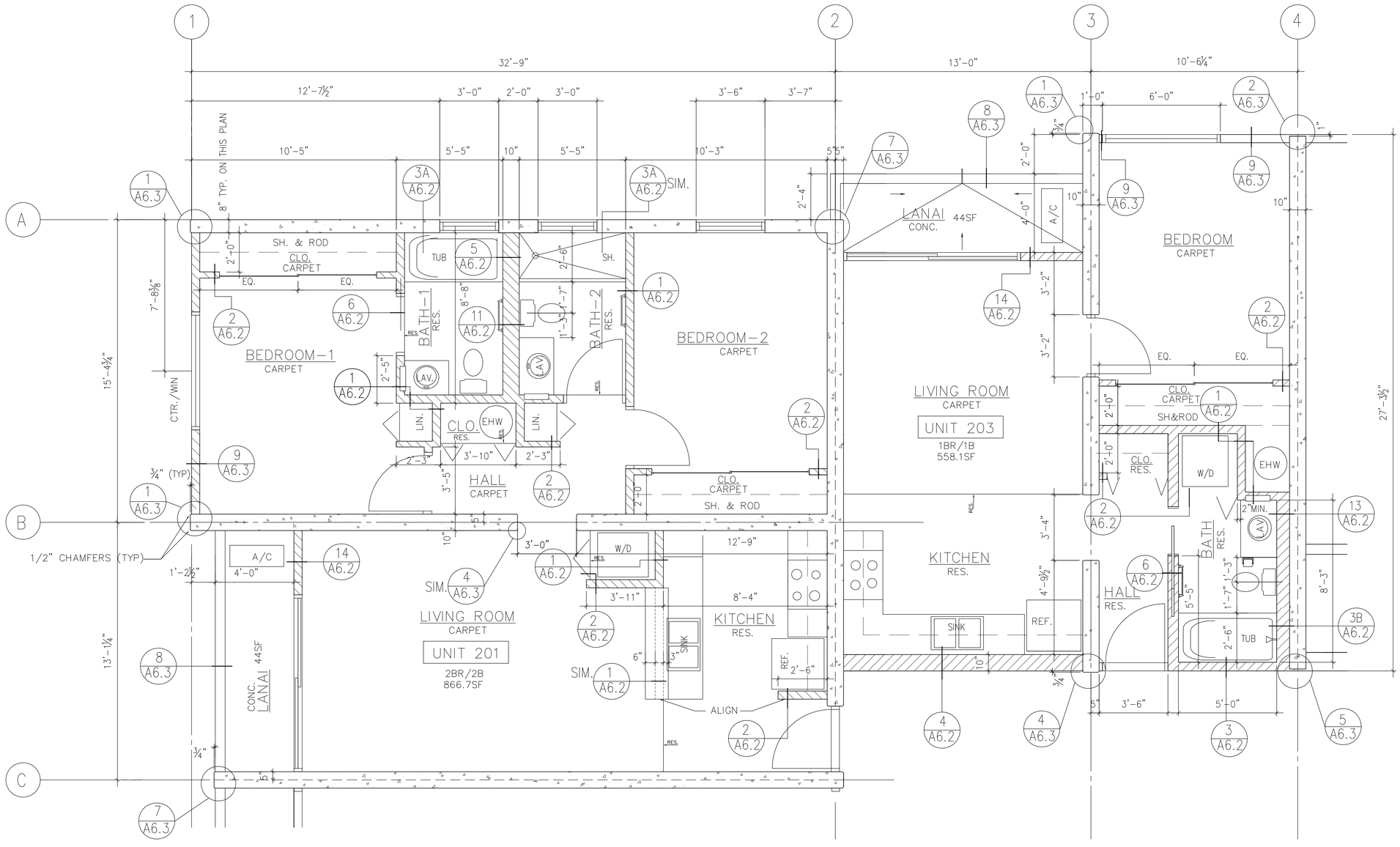

2ND FLOOR UNIT PLANS – 201 AND 203
LIKE UNITS SIMILAR FROM 3RD THRU 8TH FLOOR.

SCALE: 3/8"=1'-0"

OCT 19, 2012

N

NO.	DATE	REVISIONS
.	.	.

KAZUTOSHI YATO
LICENSED PROFESSIONAL ARCHITECT
No.3271
HAWAII, U.S.A.
Expiration Date: 4/30/2014

THIS PROJECT WAS PREPARED BY ME OR UNDER MY SUPERVISION AND CONSTRUCTION OF THIS PROJECT WILL BE UNDER MY SUPERVISION.

KAKAAKO WORKFORCE HOUSING PER SUBCHAPTER 4 OF 2011 MAUKA PLAN AND RULES

801 SOUTH STREET
HONOLULU, HAWAII

2ND FLOOR UNIT PLANS-(201/203)

KAZU YATO, AIA & ASSOCIATES,INC.
2233 ROUNDTOP TERRACE
HONOLULU, HI 96822
TEL: (808) 945-0040
FAX: (808) 945-0041

DATE	DRAWN	CHECK	FILE
	AF	KY	

SHEET

A2.4

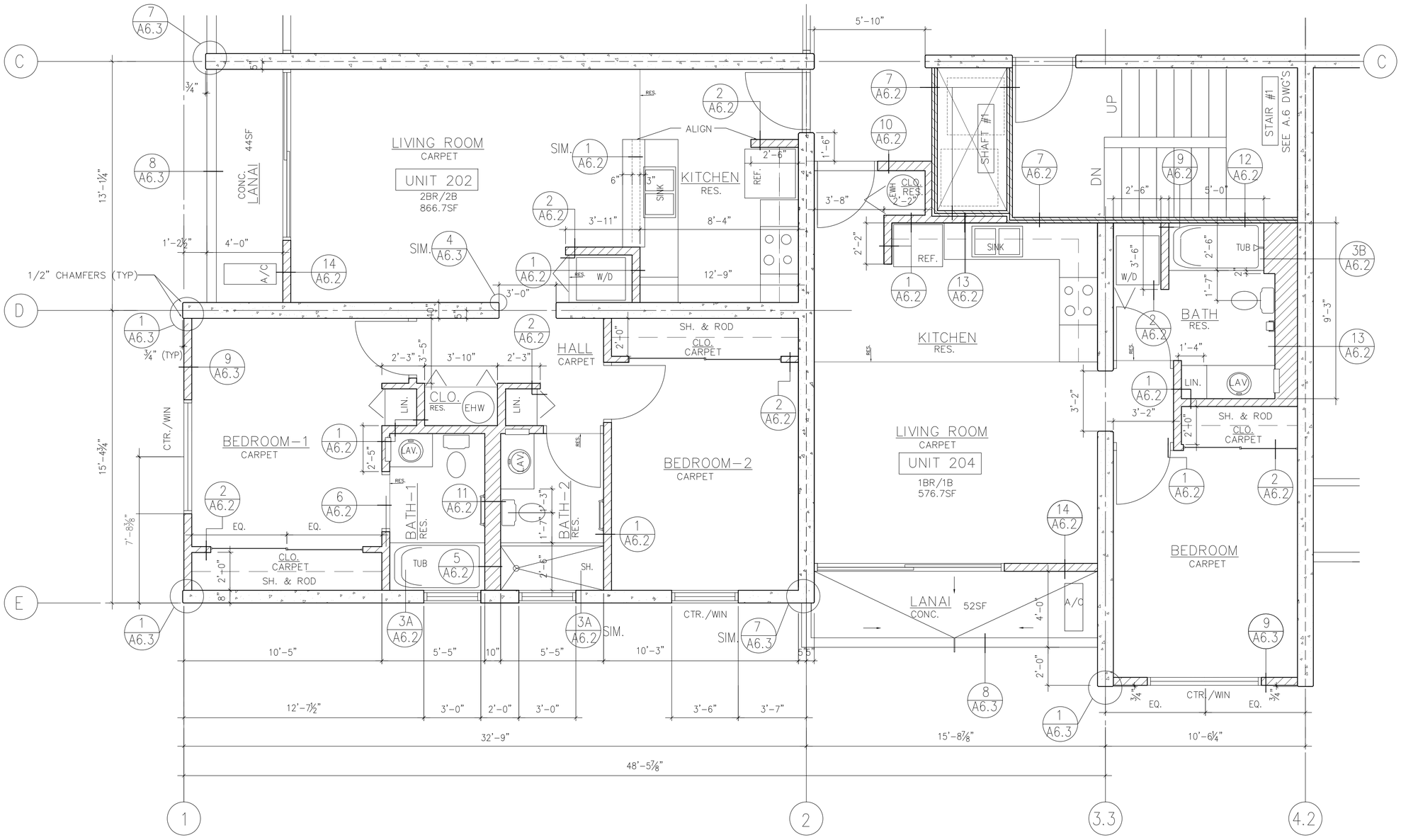

2ND FLOOR UNIT PLANS – 202 AND 204

LIKE UNITS SIMILAR FROM 3RD THRU 8TH FLOOR.

SCALE: 3/8"=1'-0"

OCT. 19, 2012

N

REVISIONS

NO.	DATE
.	.

AZUTOSHI YATO
LICENSED PROFESSIONAL ARCHITECT
No. 3271
HAWAII, U.S.A.
Expiration Date: 4/30/2014

THIS PROJECT WAS PREPARED BY ME OR UNDER MY SUPERVISION AND CONSTRUCTION OF THIS PROJECT WILL BE UNDER MY SUPERVISION.

KAKAAKO WORKFORCE HOUSING PER SUBCHAPTER 4 OF 2011 MAUKA PLAN AND RULES

801 SOUTH STREET
HONOLULU, HAWAII

2ND FLOOR UNIT PLANS-(202/204)

KAZU YATO, AIA & ASSOCIATES,INC.
2033 ROOFTOP TERRACE
HONOLULU, HI 96822
TEL: (808) 945-0040
FAX: (808) 945-0041

DATE	DRAWN	CHECK	FILE
	AF	KY	

SHEET

A2.5

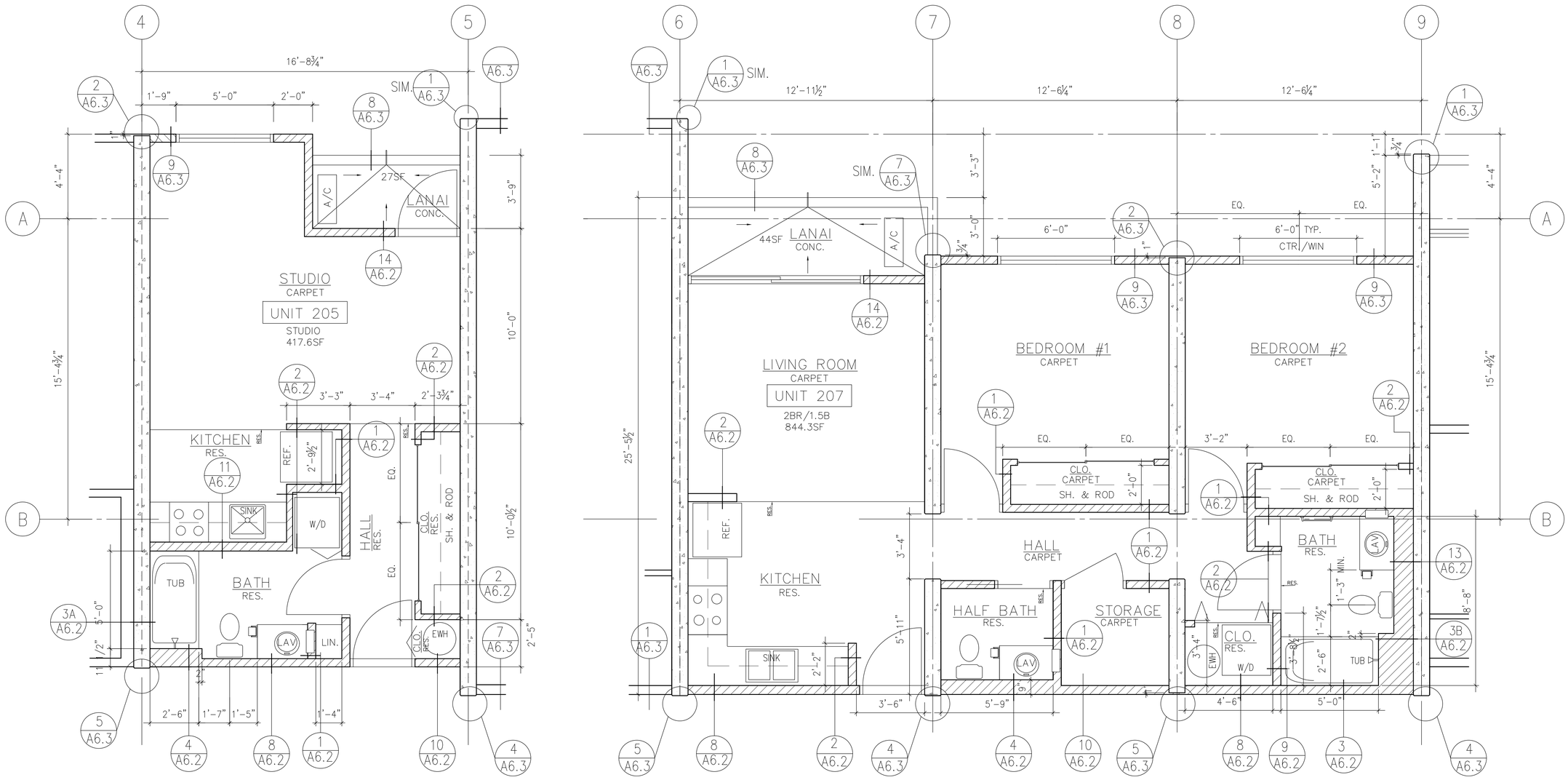

2ND FLOOR UNIT PLANS – 205 AND 207
LIKE UNITS SIMILAR FROM 3RD THRU 8TH FLOOR.

SCALE: 3/8"=1'-0"
OCT. 19, 2012

N

REVISIONS

NO.	DATE
.	.

AZUTOSHI YATO
LICENSED PROFESSIONAL ARCHITECT
No. 3271
HAWAII, U.S.A.
Expiration Date: 4/30/2014

THIS PROJECT WAS PREPARED BY ME OR UNDER MY SUPERVISION AND CONSTRUCTION OF THIS PROJECT WILL BE UNDER MY SUPERVISION.

KAKAAKO WORKFORCE HOUSING PER
SUBCHAPTER 4 OF 2011 MAUKA PLAN AND RULES

801 SOUTH STREET
HONOLULU, HAWAII

2ND FLOOR UNIT PLANS-(205/207)

KAZU YATO, AIA & ASSOCIATES, INC.
2033 ROOFTOP TERRACE
HONOLULU, HI 96822
TEL: (808) 945-0040
FAX: (808) 955-0052

DATE	DRAWN	CHECK	FILE
	AF	KY	

SHEET

A2.6

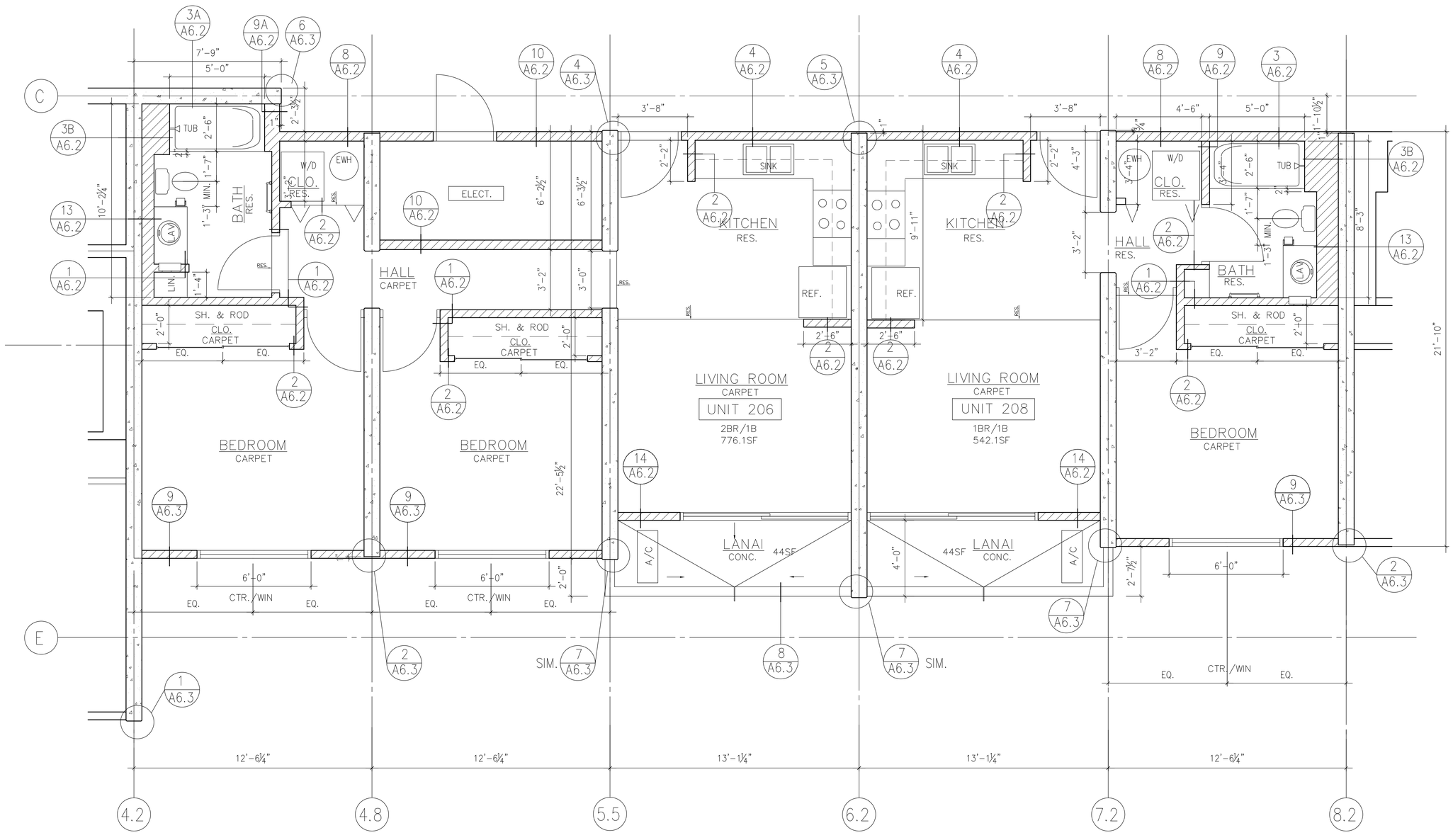

N

2ND FLOOR UNIT PLANS – 206 AND 208

LIKE UNITS SIMILAR FROM 3RD THRU 8TH FLOOR.

SCALE: 3/8"=1'-0"

OCT. 19, 2012

REVISIONS

NO.	DATE
.	.

AZUTOSHI YATO
LICENSED PROFESSIONAL ARCHITECT
No. 3271
HAWAII, U.S.A.
Expiration Date: 4/30/2014

THIS PROJECT WAS PREPARED BY ME OR UNDER MY SUPERVISION AND CONSTRUCTION OF THIS PROJECT WILL BE UNDER MY SUPERVISION.

KAKAAKO WORKFORCE HOUSING PER
SUBCHAPTER 4 OF 2011 MAUKA PLAN AND RULES

801 SOUTH STREET
HONOLULU, HAWAII

2ND FLOOR UNIT PLANS-(206/208)

KAZU YATO, AIA & ASSOCIATES, INC.
2033 ROUNDTOP TERRACE
HONOLULU, HI 96822
TEL: (808) 945-0040
FAX: (808) 945-1041

DATE	DRAWN	CHECK	FILE
	AF	KY	

SHEET

A2.7

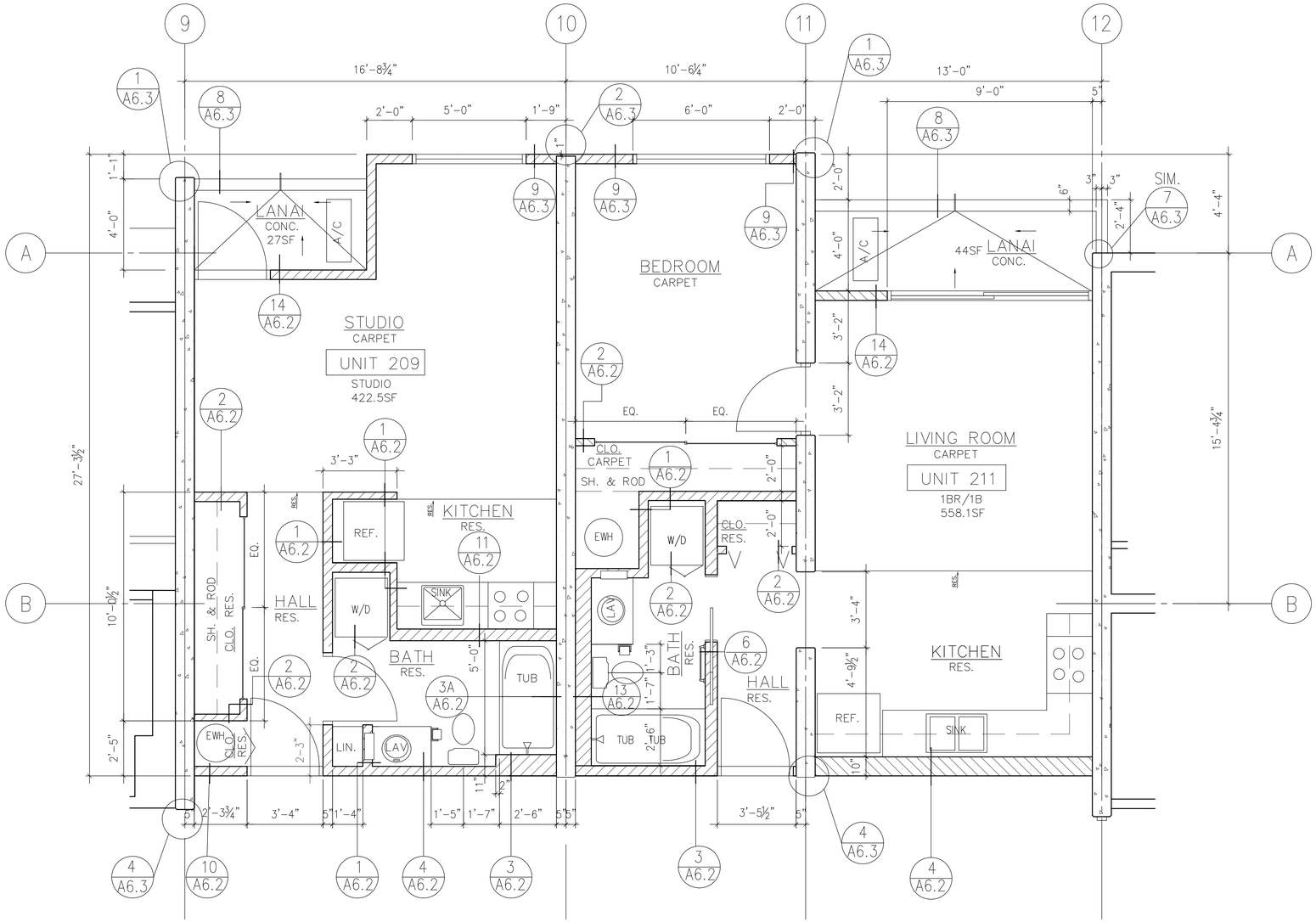

2ND FLOOR UNIT PLANS – 209 AND 211

LIKE UNITS SIMILAR FROM 3RD THRU 8TH FLOOR

SCALE: 3/8"=1'-0"

Oct 18, 2012

N

REVISIONS

NO.	DATE	
.	.	

KAZUTOSHI YATO
LICENSED PROFESSIONAL ARCHITECT
No.3271
HAWAII, U.S.A.
Expiration Date: 4/30/2014

THIS PROJECT WAS PREPARED BY ME OR UNDER MY SUPERVISION AND CONSTRUCTION OF THIS PROJECT WILL BE UNDER MY SUPERVISION.

KAKAAKO WORKFORCE HOUSING PER
SUBCHAPTER 4 OF 2011 MAUKA PLAN AND RULES

801 SOUTH STREET
HONOLULU, HAWAII

2ND FLOOR UNIT PLANS-(209/211)

KAZU YATO, AIA & ASSOCIATES, INC.
2031 ROUNDTOP TERRACE
HONOLULU, HI 96822
TEL: (808) 945-0040
FAX: (808) 945-0041

DATE	DRAWN	CHECK	FILE
	AF	KY	

SHEET

A2.8

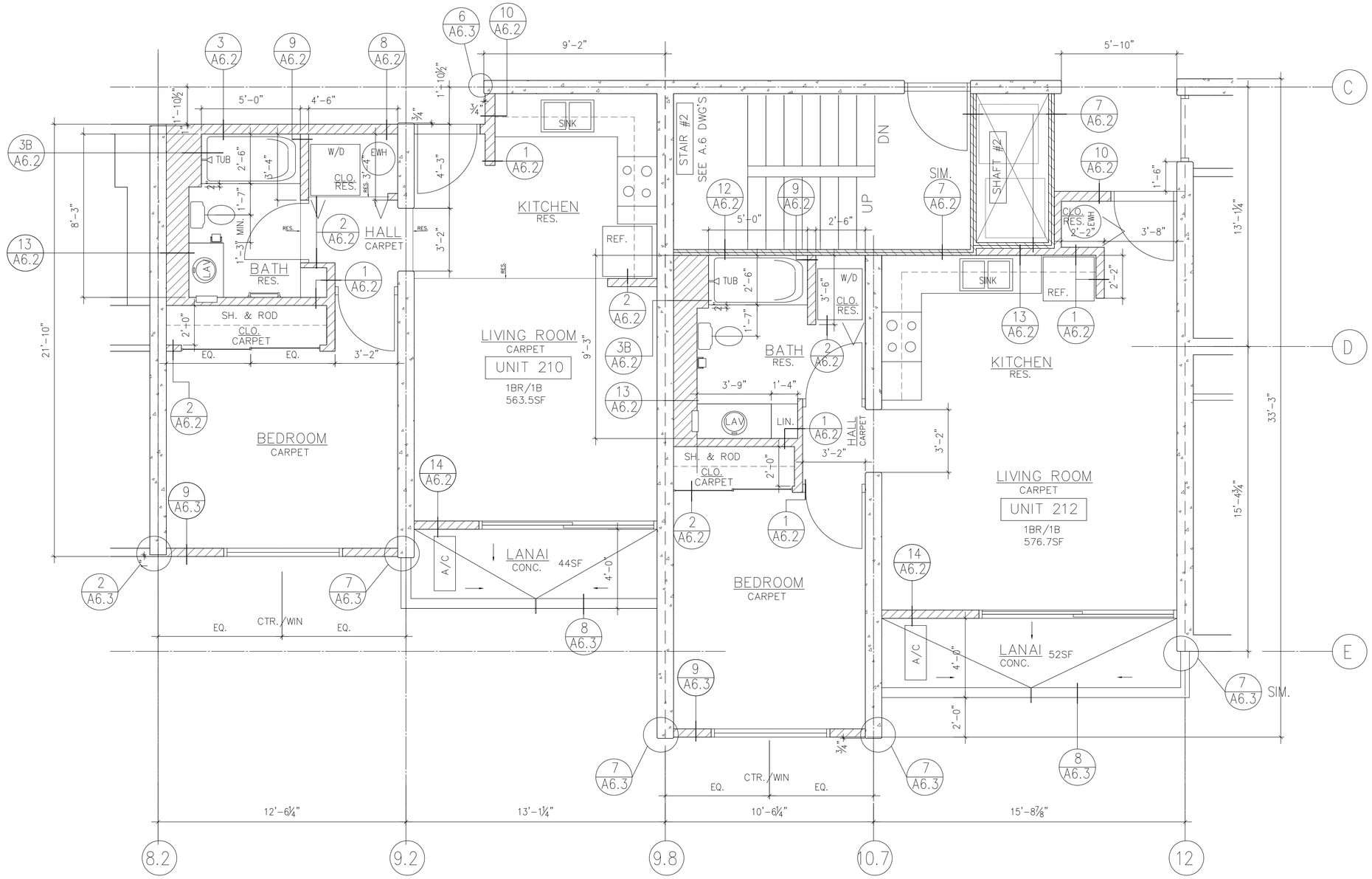

2ND FLOOR UNIT PLANS – 210 AND 212
LIKE UNITS SIMILAR FROM 3RD THRU 8TH FLOOR

SCALE: 3/8"=1'-0"
OCT. 19, 2012

N

REVISIONS

NO.	DATE
.	.

THIS PROJECT WAS PREPARED BY ME OR UNDER MY SUPERVISION AND CONSTRUCTION OF THIS PROJECT WILL BE UNDER MY SUPERVISION.

KAZUTOSHI YATO
LICENSED PROFESSIONAL ARCHITECT
No. 3271
HAWAII, U.S.A.
Expiration Date: 4/30/2014

KAKAAKO WORKFORCE HOUSING PER
SUBCHAPTER 4 OF 2011 MAUKA PLAN AND RULES

801 SOUTH STREET
HONOLULU, HAWAII

2ND FLOOR UNIT PLANS-(210/212)

KAZU YATO, AIA & ASSOCIATES,INC.
2033 ROUNDTOP TERRACE
HONOLULU, HI 96822
TEL: (808) 945-0040
FAX: (808) 945-0041

DATE	DRAWN	CHECK	FILE
	AF	KY	

SHEET

A2.9

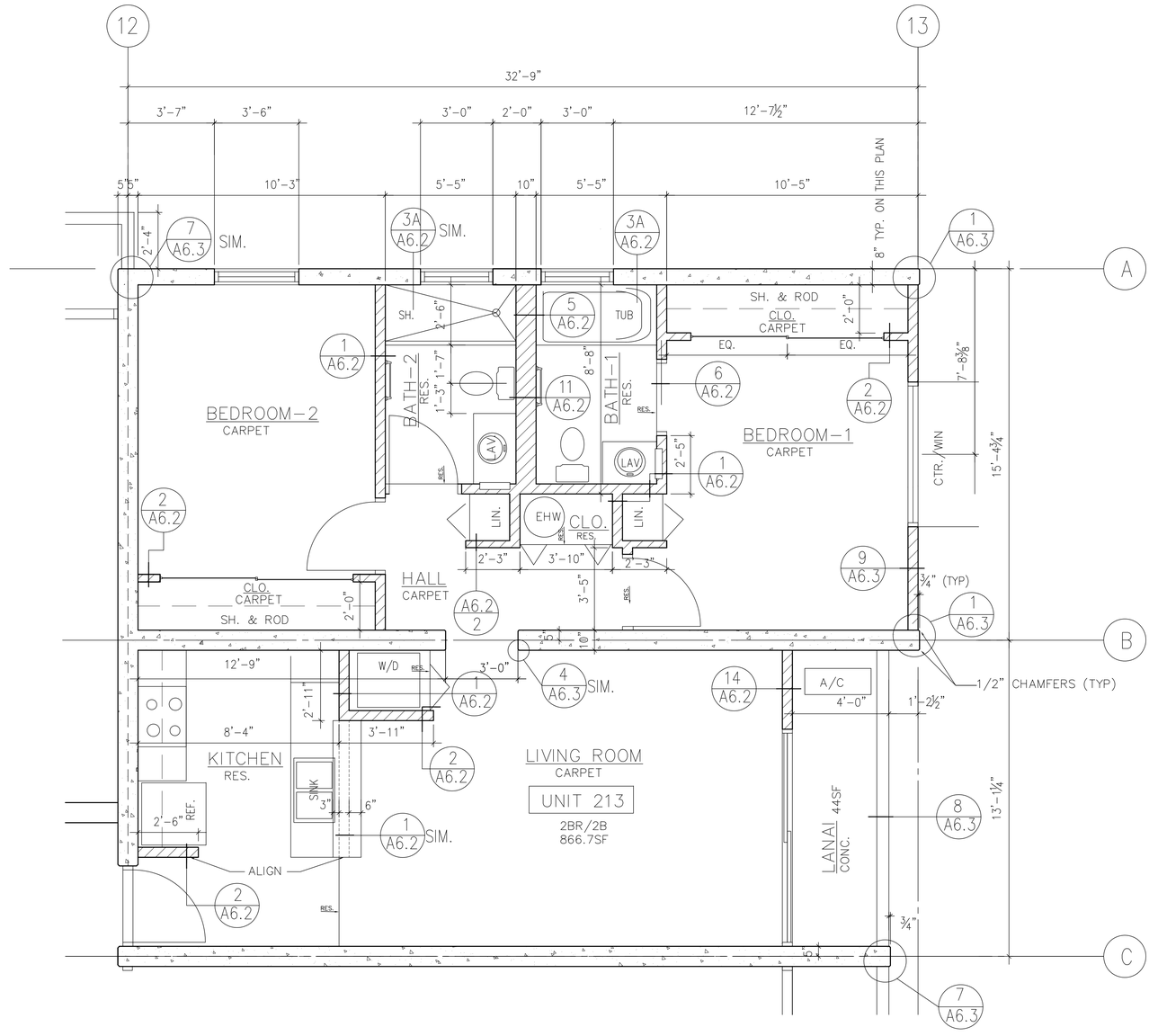

N

2ND FLOOR UNIT PLAN – 213

LIKE UNITS SIMILAR FROM 3RD THRU 8TH FLOOR

SCALE: 3/8"=1'-0"

OCT. 19, 2012

NO.	DATE	REVISIONS
.	.	.

AZUTOSHI YATO
LICENSED PROFESSIONAL ARCHITECT
No. 3271
HAWAII, U.S.A.
Expiration Date: 4/30/2014

THIS PROJECT WAS PREPARED BY ME OR UNDER MY SUPERVISION AND CONSTRUCTION OF THIS PROJECT WILL BE UNDER MY SUPERVISION.

KAKAAKO WORKFORCE HOUSING PER
SUBCHAPTER 4 OF 2011 MAUKA PLAN AND RULES

801 SOUTH STREET
HONOLULU, HAWAII

2ND FLOOR UNIT PLAN-(213)

KAZU YATO, AIA & ASSOCIATES,INC.
2053 ROUNDTOP TERRACE
HONOLULU, HI 96822
TEL: (808) 945-0040
FAX: (808) 945-0041

DATE	DRAWN	CHECK	FILE
	AF	KY	

SHEET

A2.10

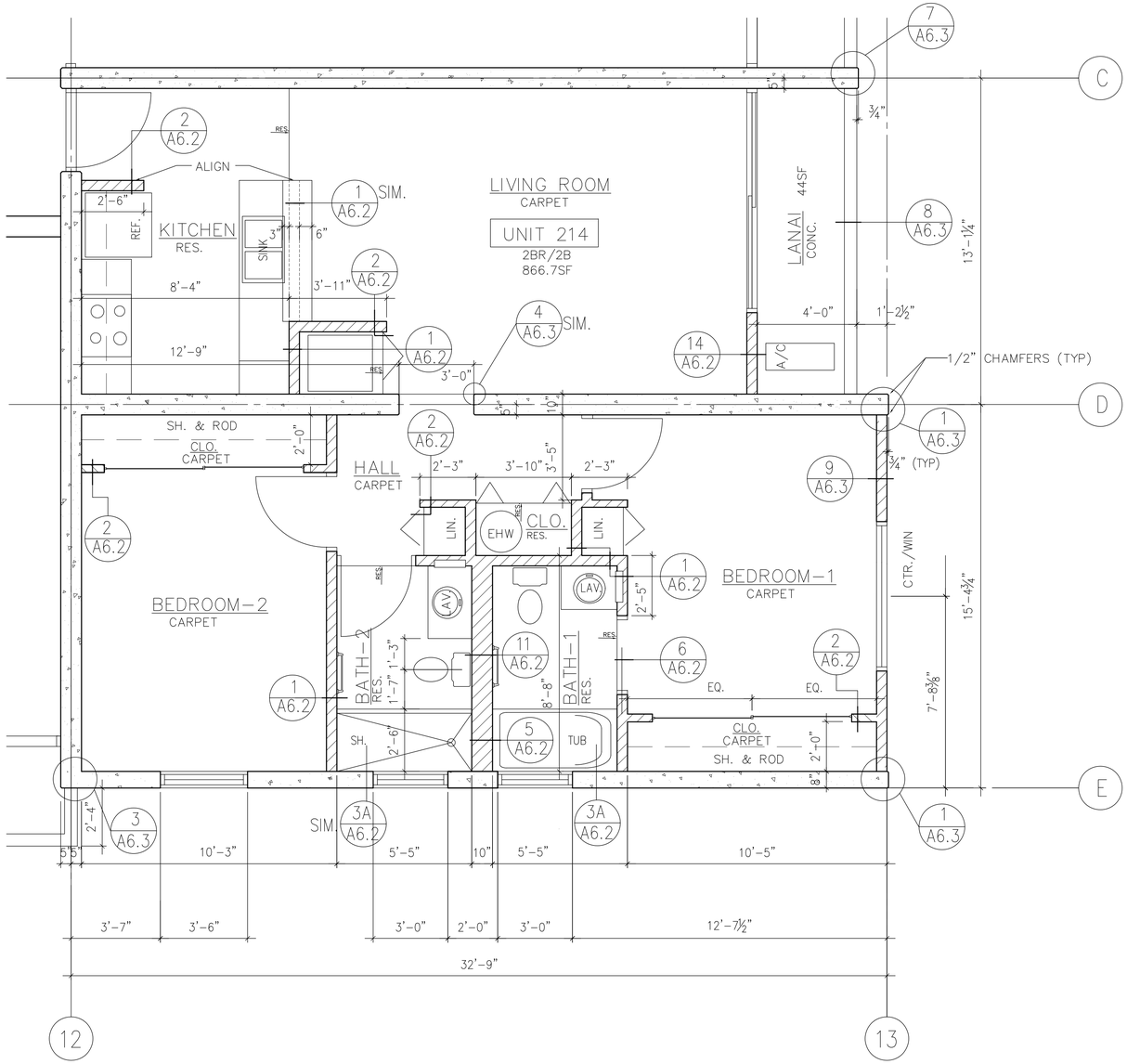

2ND FLOOR UNIT PLAN – 214

LIKE UNITS SIMILAR FROM 3RD THRU 8TH FLOOR

SCALE: 3/8"=1'-0"

OCT. 19, 2012

REVISIONS

NO.	DATE
.	.

AZUTOSHI YATO
LICENSED PROFESSIONAL ARCHITECT
No. 3271
HAWAII, U.S.A.
Expiration Date: 4/30/2014

THIS PROJECT WAS PREPARED BY ME OR UNDER MY SUPERVISION AND CONSTRUCTION OF THIS PROJECT WILL BE UNDER MY SUPERVISION.

KAKAAKO WORKFORCE HOUSING PER
SUBCHAPTER 4 OF 2011 MAUKA PLAN AND RULES

801 SOUTH STREET
HONOLULU, HAWAII

2ND FLOOR UNIT PLAN-(214)

KAZU YATO, AIA & ASSOCIATES, INC.
2033 ROUNDTOP TERRACE
HONOLULU, HI 96822
TEL: (808) 945-0040
FAX: (808) 945-0041

DATE	DRAWN	CHECK	FILE
	AF	KY	

SHEET

A2.11

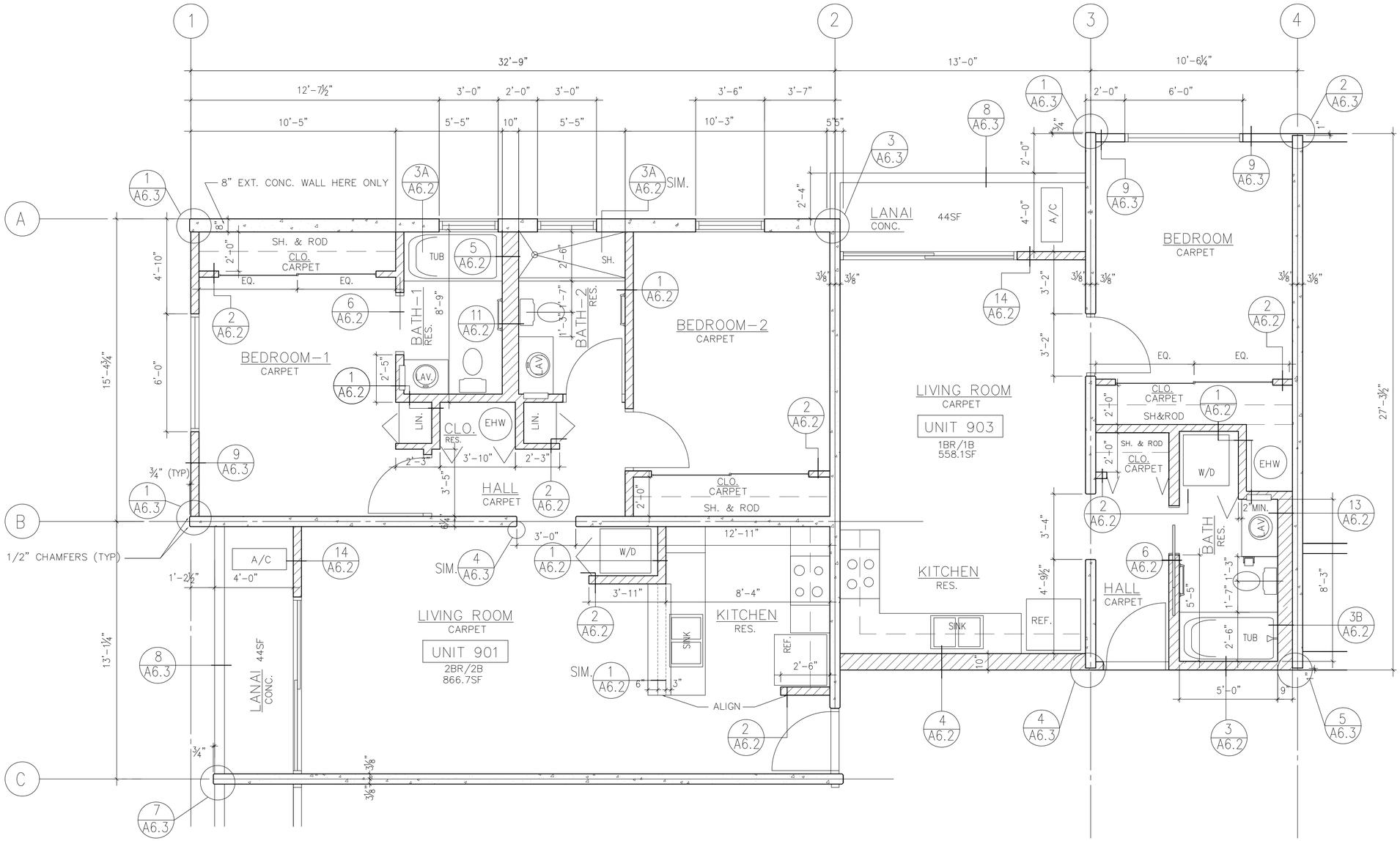

9TH FLOOR UNIT PLANS 901 AND 903
LIKE UNITS SIMILAR 10TH THRU 46TH FLOOR

SCALE: 3/8"=1'-0"

OCT. 19, 2012

N

REVISIONS

NO.	DATE
.	.

KAZUTOSHI YATO
LICENSED PROFESSIONAL ARCHITECT
No. 3271
HAWAII, U.S.A.
Expiration Date: 4/30/2014

THIS PROJECT WAS PREPARED BY ME OR UNDER MY SUPERVISION AND CONSTRUCTION OF THIS PROJECT WILL BE UNDER MY SUPERVISION.

KAKAAKO WORKFORCE HOUSING
SUBCHAPTER 4 OF 2011 MAUKA PLAN AND RULES

801 SOUTH STREET
HONOLULU, HAWAII

9TH FLOOR UNIT PLANS-(901-903)

KAZU YATO, AIA & ASSOCIATES, INC.
2233 ROUNDTOP TERRACE
HONOLULU, HI 96822
TEL: (808) 945-0040
FAX: (808) 945-0041

DATE	DRAWN	CHECK	FILE
	AF	KY	

SHEET

A2.12

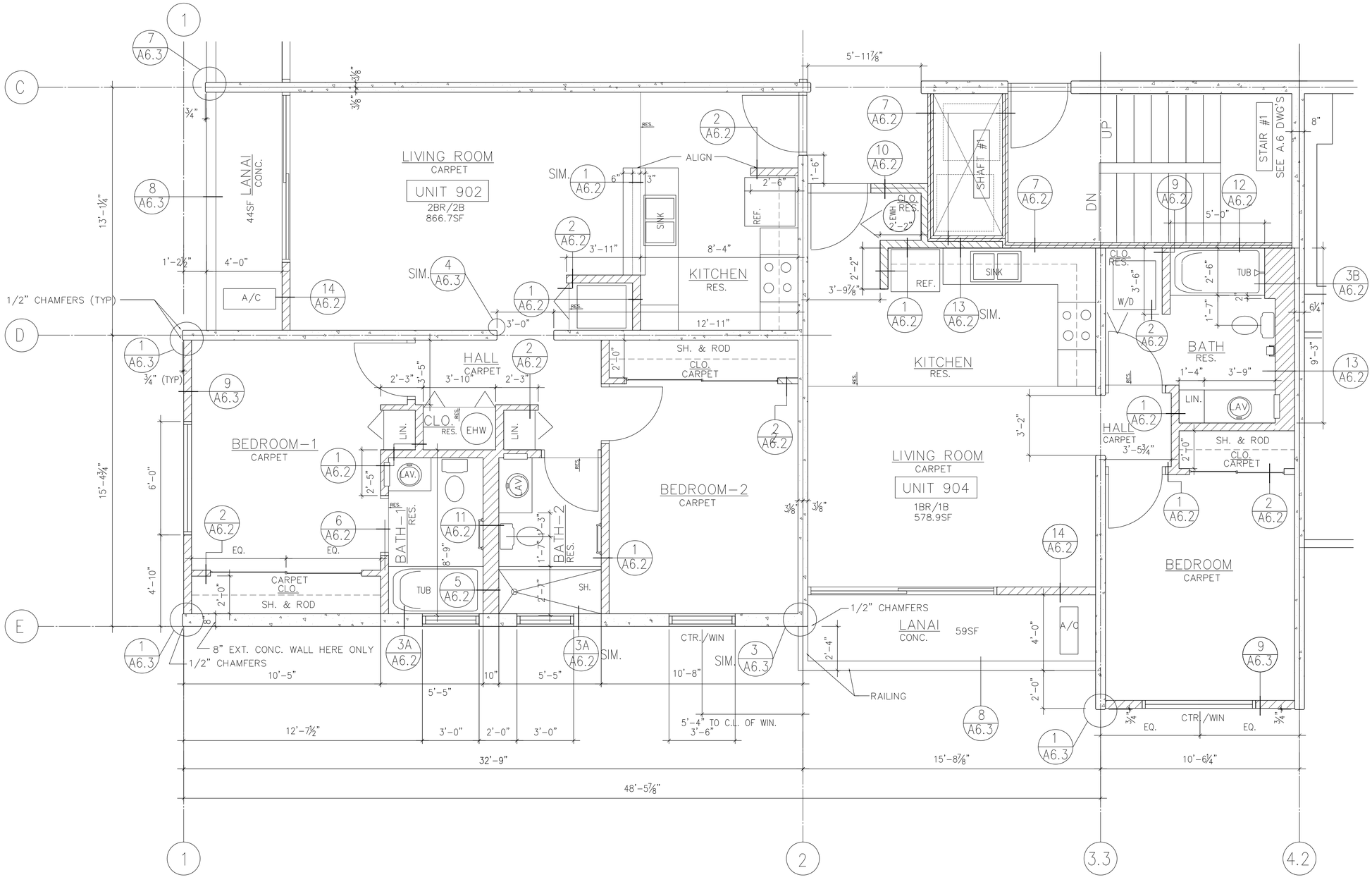

N

9TH FLOOR UNIT PLANS 902 AND 904

LIKE UNITS SIMILAR 10TH THRU 46TH FLOOR

SCALE: 3/8"=1'-0"

OCT. 19, 2012

REVISIONS

NO.	DATE
.	.

THIS PROJECT WAS PREPARED BY ME OR UNDER MY SUPERVISION AND CONSTRUCTION OF THIS PROJECT WILL BE UNDER MY SUPERVISION.

KAZUTOSHI YATO
LICENSED PROFESSIONAL ARCHITECT
No. 3271
HAWAII, U.S.A.

Expiration Date: 4/30/2014

KAKAAKO WORKFORCE HOUSING PER SUBCHAPTER 4 OF 2011 MAUKA PLAN AND RULES

801 SOUTH STREET
HONOLULU, HAWAII

9TH FLOOR UNIT PLANS-(902/904)

KAZU YATO, AIA & ASSOCIATES,INC.
2033 ROUNDTOP TERRACE
HONOLULU, HI 96822
TEL: (808) 945-0040
FAX: (808) 945-0041

DATE	DRAWN	CHECK	FILE
	AF	KY	

SHEET

A2.13

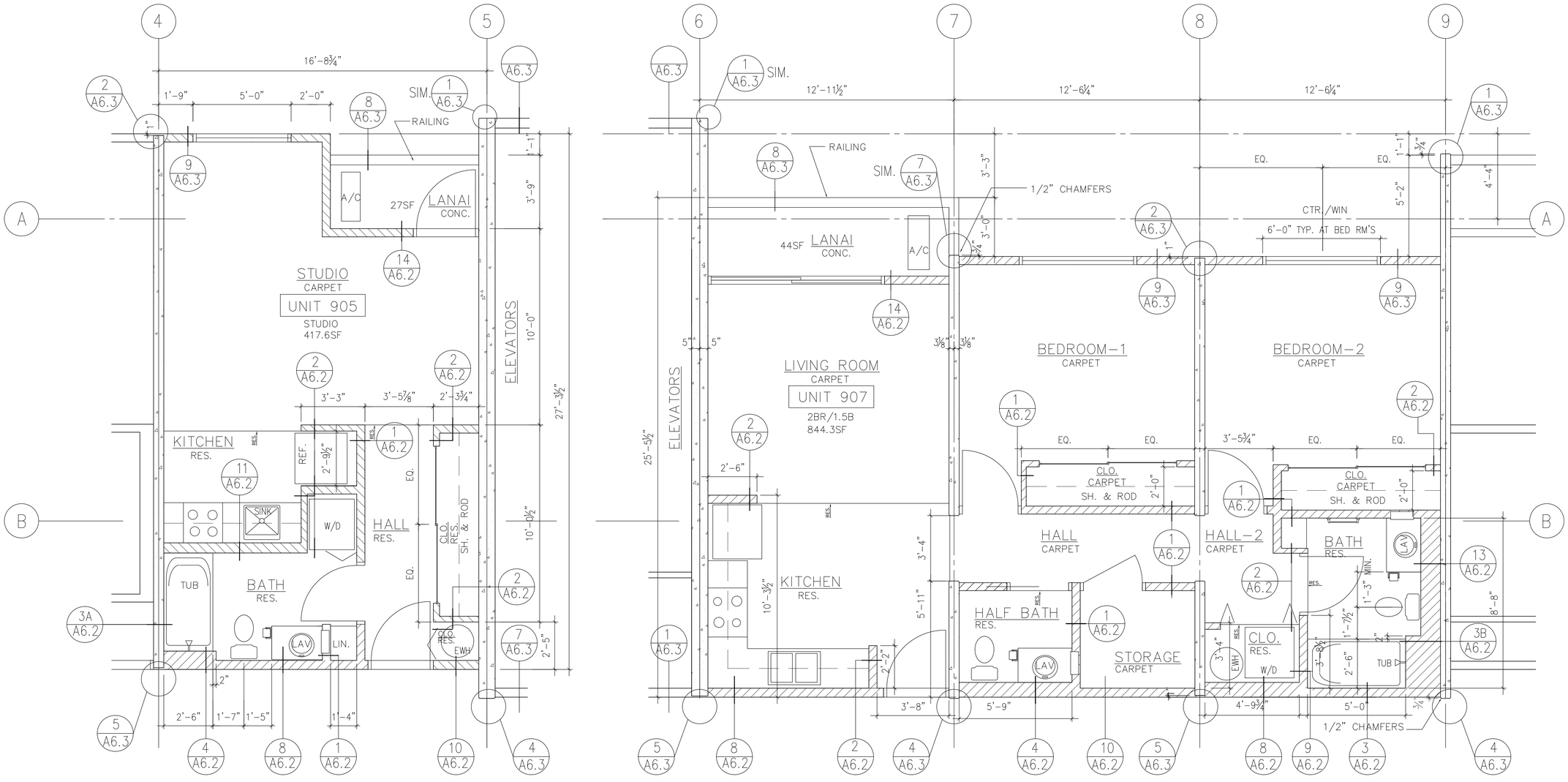

N

9TH FLOOR UNIT PLANS 905 AND 907
LIKE UNITS SIMILAR 10TH THRU 46TH FLOOR

SCALE: 3/8"=1'-0"

OCT. 18, 2012

REVISIONS

NO.	DATE
.	.

KAZUTOSHI YATO
LICENSED PROFESSIONAL ARCHITECT
No. 3271
HAWAII, U.S.A.
Expiration Date: 4/30/2014

THIS PROJECT WAS PREPARED BY ME OR UNDER MY SUPERVISION AND CONSTRUCTION OF THIS PROJECT WILL BE UNDER MY SUPERVISION.

KAKAAKO WORKFORCE HOUSING PER
SUBCHAPTER 4 OF 2011 MAUKA PLAN AND RULES

801 SOUTH STREET
HONOLULU, HAWAII

9RD FLOOR UNIT PLANS-(905/907)

KAZU YATO, AIA & ASSOCIATES, INC.
2013 ROYALTOP TERRACE
HONOLULU, HI 96822
TEL.: (808) 945-2040
FAX.: (808) 945-2041

DATE	DRAWN	CHECK	FILE
	AF	KY	

SHEET

A2.14

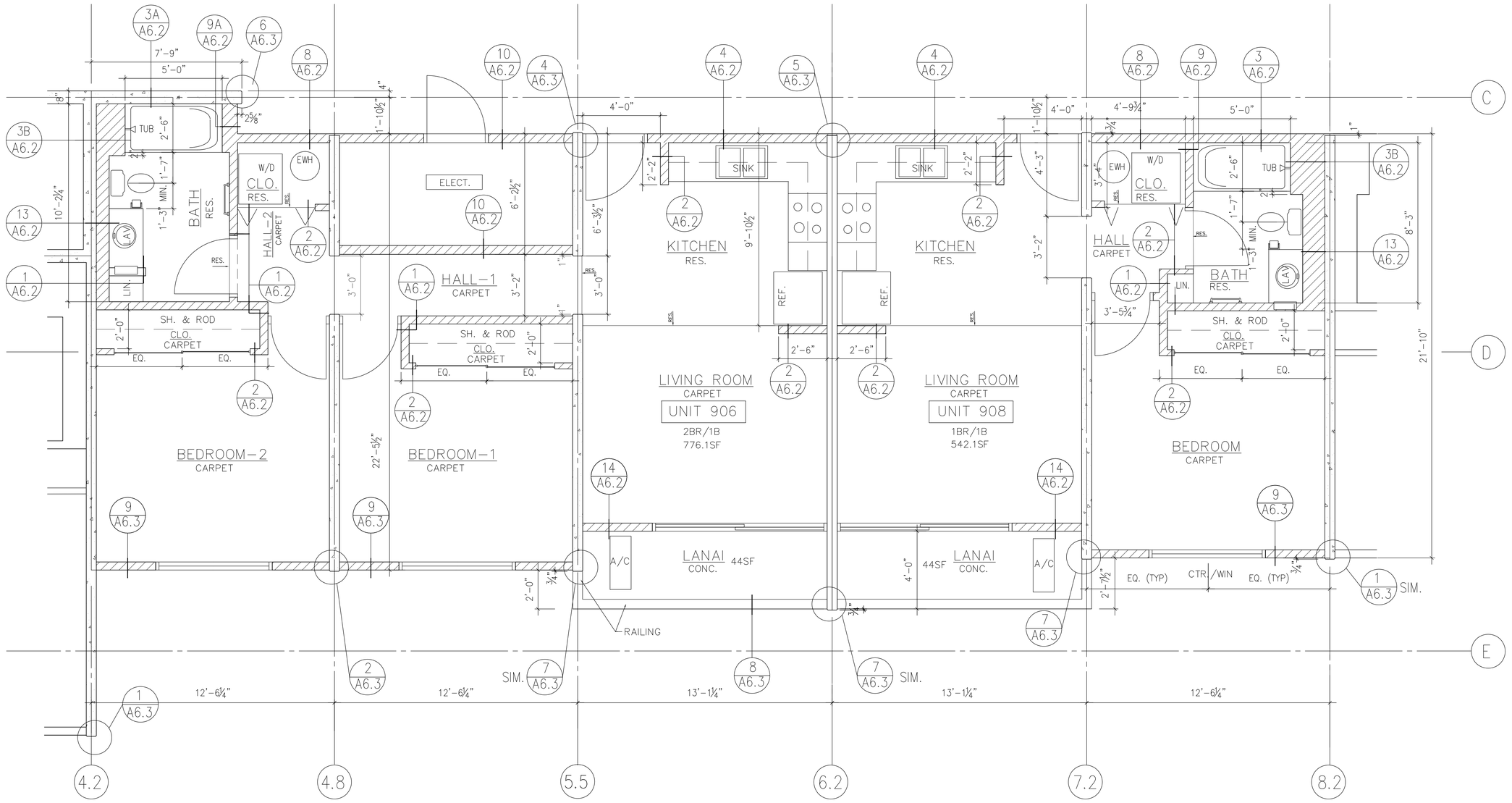

9TH FLOOR UNIT PLANS 906 AND 908

LIKE UNITS SIMILAR 10TH THRU 46TH FLOOR

SCALE: 3/8"=1'–0"

OCT. 19, 2012

N

NO.	DATE	REVISIONS
.	.	.

KAZUTOSHI YATO
LICENSED PROFESSIONAL ARCHITECT
No. 3271
HAWAII, U.S.A.
Expiration Date: 4/30/2014

THIS PROJECT WAS PREPARED BY ME OR UNDER MY SUPERVISION AND CONSTRUCTION OF THIS PROJECT WILL BE UNDER MY SUPERVISION.

KAKAAKO WORKFORCE HOUSING PER
SUBCHAPTER 4 OF 2011 MAUKA PLAN AND RULES

801 SOUTH STREET
HONOLULU, HAWAII

9TH FLOOR UNIT PLANS-(906/908)

KAZU YATO, AIA & ASSOCIATES, INC.
2033 ROUNDTOP TERRACE
HONOLULU, HI 96822
TEL: (808) 945-0040
FAX: (808) 945-0041

DATE	DRAWN	CHECK	FILE
	AF	KY	

SHEET

A2.15

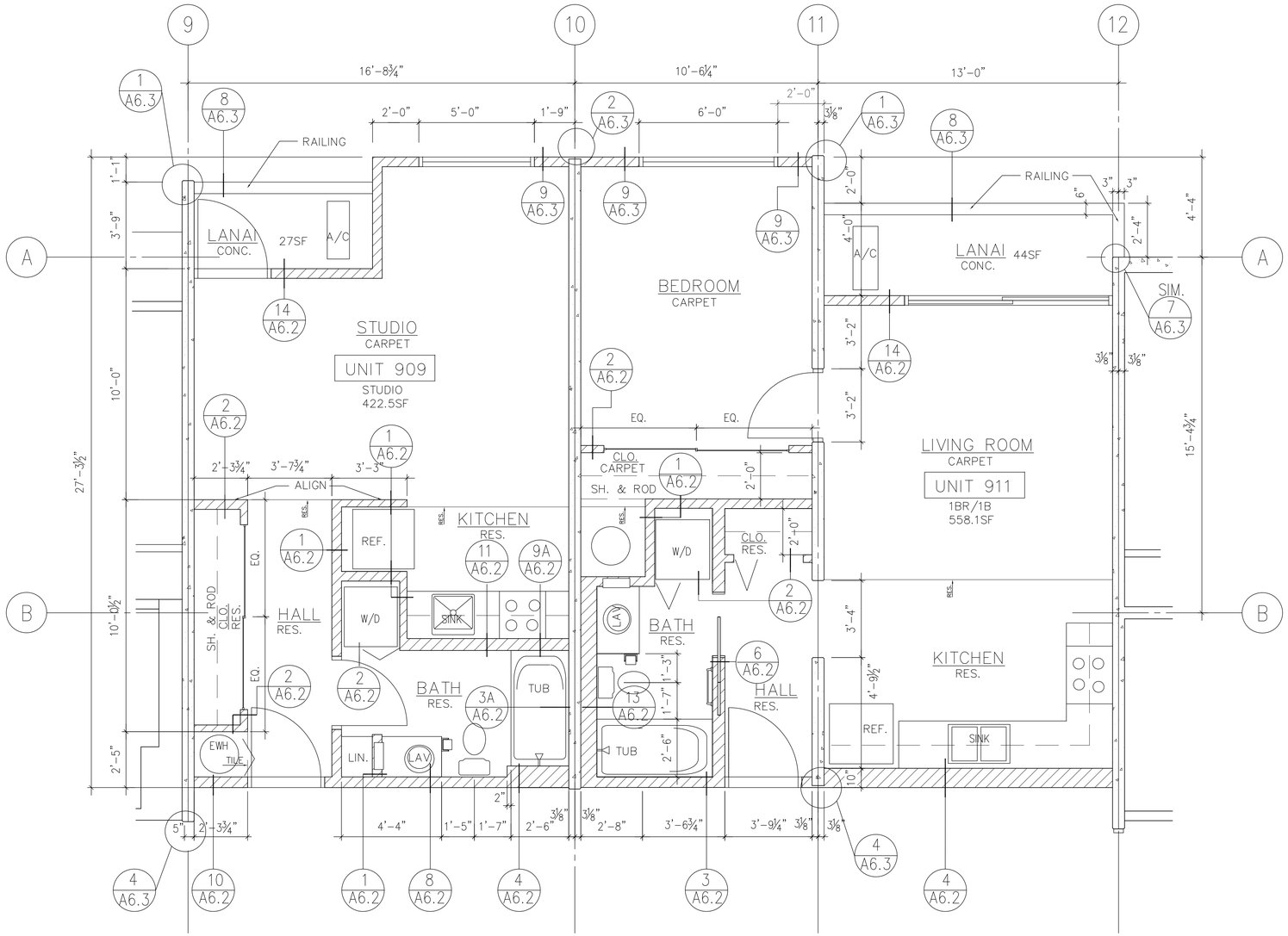

9TH FLOOR UNIT PLANS 909 AND 911
LIKE UNITS SIMILAR 10TH THRU 46TH FLOOR

SCALE: 3/8"=1'-0"
OCT. 19, 2012

N

REVISIONS

NO.	DATE	
.	.	.

KAZUTOSHI YATO
LICENSED PROFESSIONAL ARCHITECT
No. 3271
HAWAII, U.S.A.
Expiration Date: 4/30/2014

THIS PROJECT WAS PREPARED BY ME OR UNDER MY SUPERVISION AND CONSTRUCTION OF THIS PROJECT WILL BE UNDER MY SUPERVISION.

KAKAAKO WORKFORCE HOUSING PER
SUBCHAPTER 4 OF 2011 MAUKA PLAN AND RULES

801 SOUTH STREET
HONOLULU, HAWAII

9TH FLOOR UNIT PLANS (909/911)

KAZU YATO, AIA & ASSOCIATES, INC.
2033 ROUNDTOP TERRACE
HONOLULU, HI 96822
TEL: (808) 945-0040
FAX: (808) 945-0041

DATE	DRAWN	CHECK	FILE
	AF	KY	

SHEET

A2.16

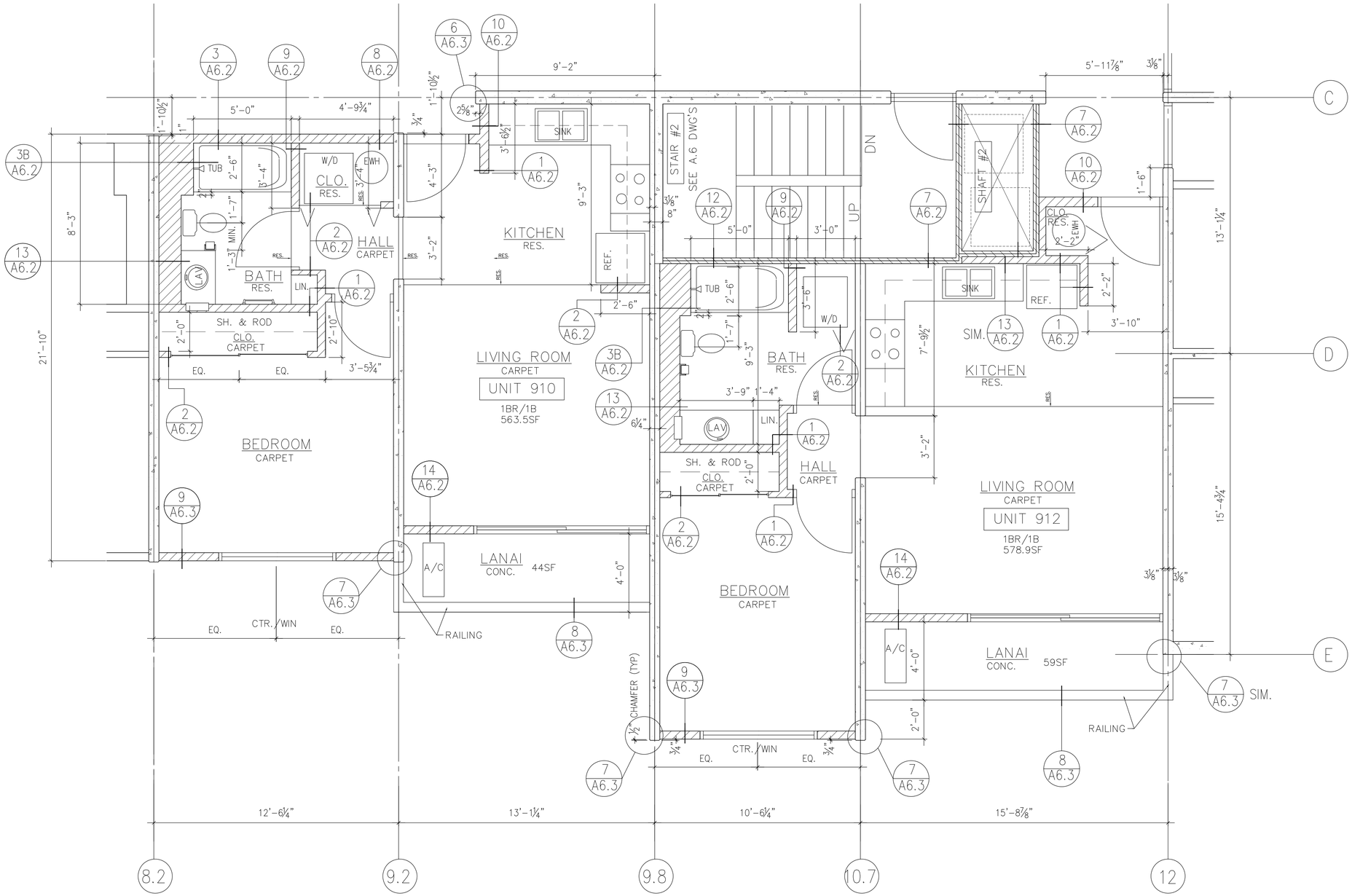

9TH FLOOR UNIT PLANS 910 AND 912

LIKE UNITS SIMILAR 10TH THRU 46TH FLOOR

SCALE: 3/8"=1'-0"
OCT. 19, 2012

N

REVISIONS

NO.	DATE
.	.

THIS PROJECT WAS PREPARED BY ME OR UNDER MY SUPERVISION AND CONSTRUCTION OF THIS PROJECT WILL BE UNDER MY SUPERVISION.

KAZUTOSHI YATO
LICENSED PROFESSIONAL ARCHITECT
No. 3271
HAWAII, U.S.A.

Expiration Date: 4/30/2014

KAKAAKO WORKFORCE HOUSING PER
SUBCHAPTER 4 OF 2011 MAUKA PLAN AND RULES

801 SOUTH STREET
HONOLULU, HAWAII

9TH FLOOR UNIT PLANS-(910/912)

KAZU YATO, AIA & ASSOCIATES,INC.
2231 ROUND TOP TERRACE
HONOLULU, HI 96822
TEL: (808) 945-0049
FAX: (808) 945-0041

DATE	DRAWN	CHECK	FILE
	AF	KY	

SHEET

A2.17

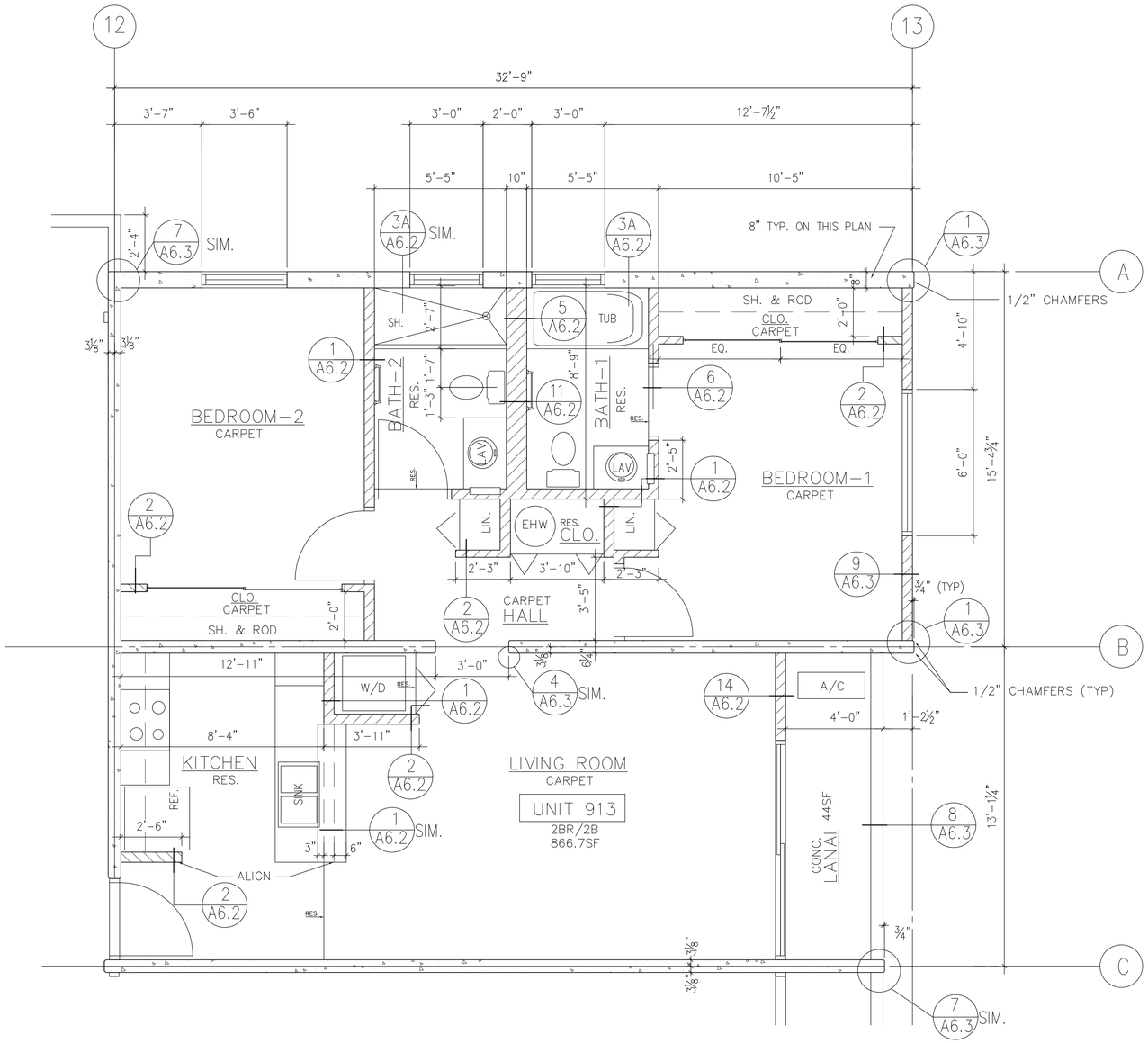

N

9TH FLOOR UNIT PLAN – 913

LIKE UNITS SIMILAR FROM 10TH THRU 46TH FLOOR

SCALE: 3/8"=1'-0"

OCT. 19, 2012

REVISIONS

NO.	DATE	
.	.	.

KAZUTOSHI YATO
LICENSED PROFESSIONAL ARCHITECT
No. 3271
HAWAII, U.S.A.

Expiration Date: 4/30/2014

THIS PROJECT WAS PREPARED BY ME OR UNDER MY SUPERVISION AND CONSTRUCTION OF THIS PROJECT WILL BE UNDER MY SUPERVISION.

KAKAAKO WORKFORCE HOUSING
SUBCHAPTER 4 OF 2011 MAUKA PLAN AND RULES

801 SOUTH STREET
HONOLULU, HAWAII

9TH FLOOR UNIT PLAN-(913)

KAZU YATO, AIA & ASSOCIATES,INC.
2233 ROUNDTOP TERRACE
HONOLULU, HI 96822
TEL: (808) 945-0040
FAX: (808) 945-0041

DATE	DRAWN	CHECK	FILE
	AF	KY	

SHEET

A2.18

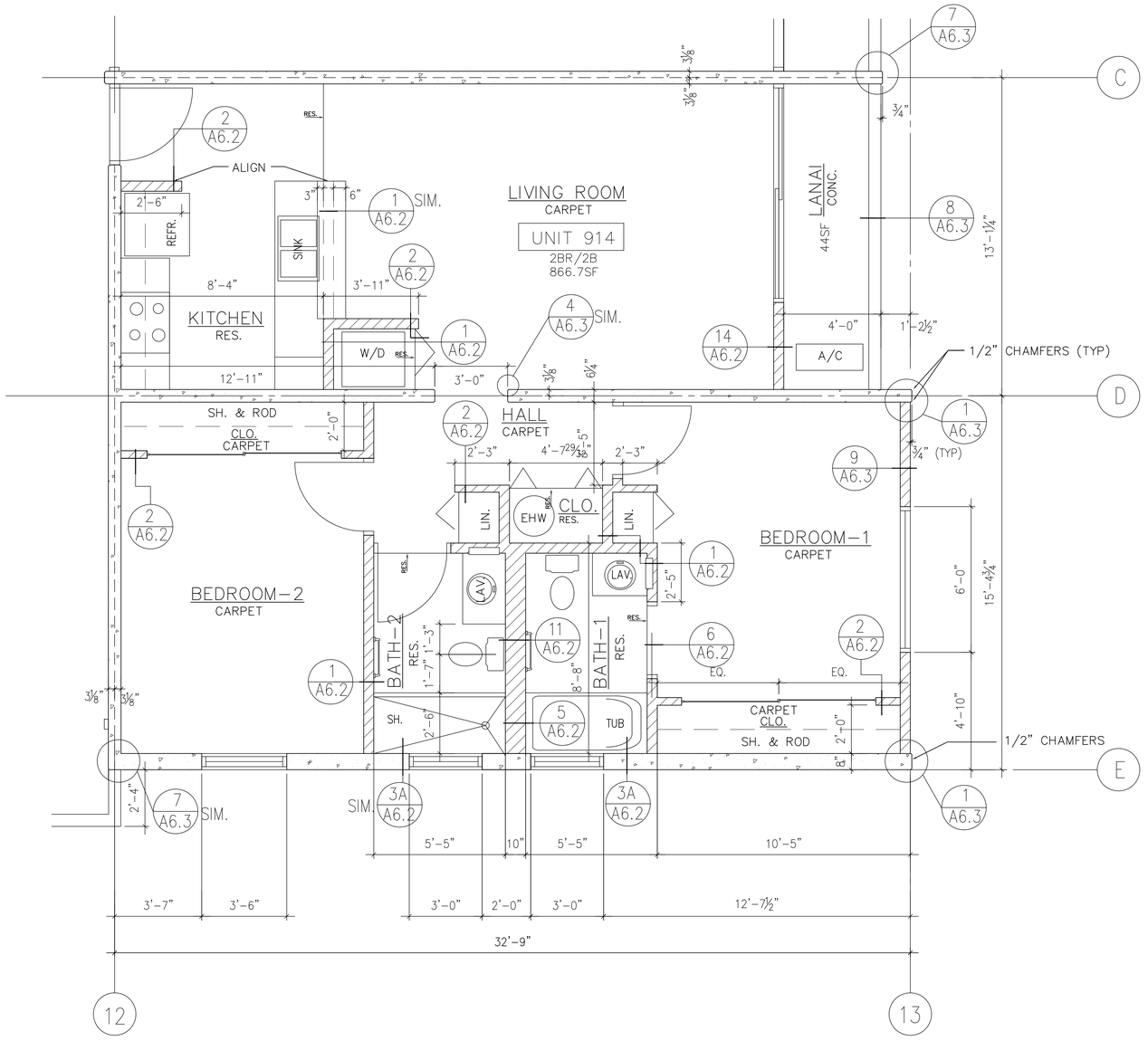

N

9TH FLOOR UNIT PLAN – 914

LIKE UNITS SIMILAR FROM 10TH THRU 46TH FLOOR

SCALE: 3/8"=1'-0"

OCT. 19, 2012

REVISIONS

NO.	DATE
.	.

KAZUTOSHI YATO
LICENSED PROFESSIONAL ARCHITECT
No. 3271
HAWAII, U.S.A.

Expiration Date: 4/30/2014

THIS PROJECT WAS PREPARED BY ME OR UNDER MY SUPERVISION AND CONSTRUCTION OF THIS PROJECT WILL BE UNDER MY SUPERVISION.

KAKAAKO WORKFORCE HOUSING PER
SUBCHAPTER 4 OF 2011 MAUKA PLAN AND RULES

801 SOUTH STREET
HONOLULU, HAWAII

9TH FLOOR UNIT PLAN-(914)

KAZU YATO, AIA & ASSOCIATES,INC.
2233 ROUNDTOP TERRACE
HONOLULU, HI 96822
TEL: (808) 945-0049
FAX: (808) 945-0041

DATE	DRAWN	CHECK	FILE
	AF	KY	

SHEET

A2.19

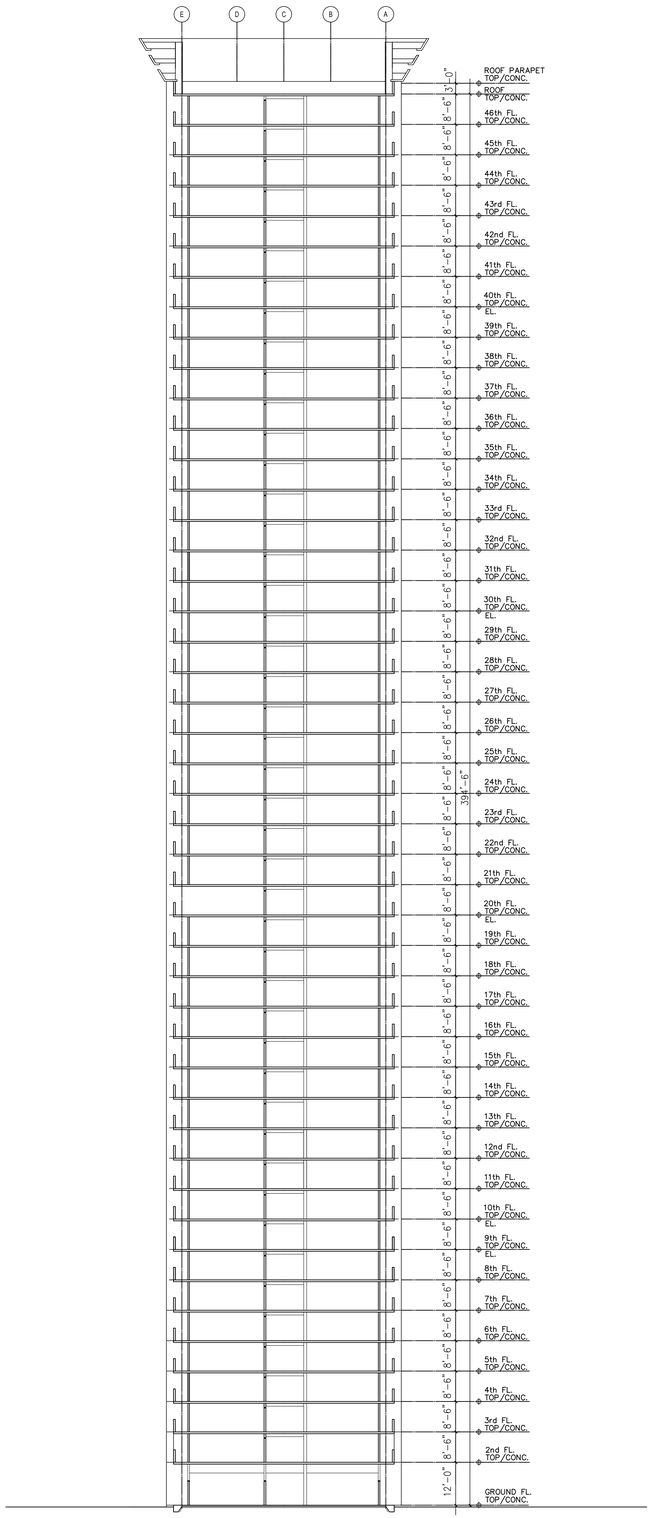

SECTION A
SCALE 1"=20' A3.0

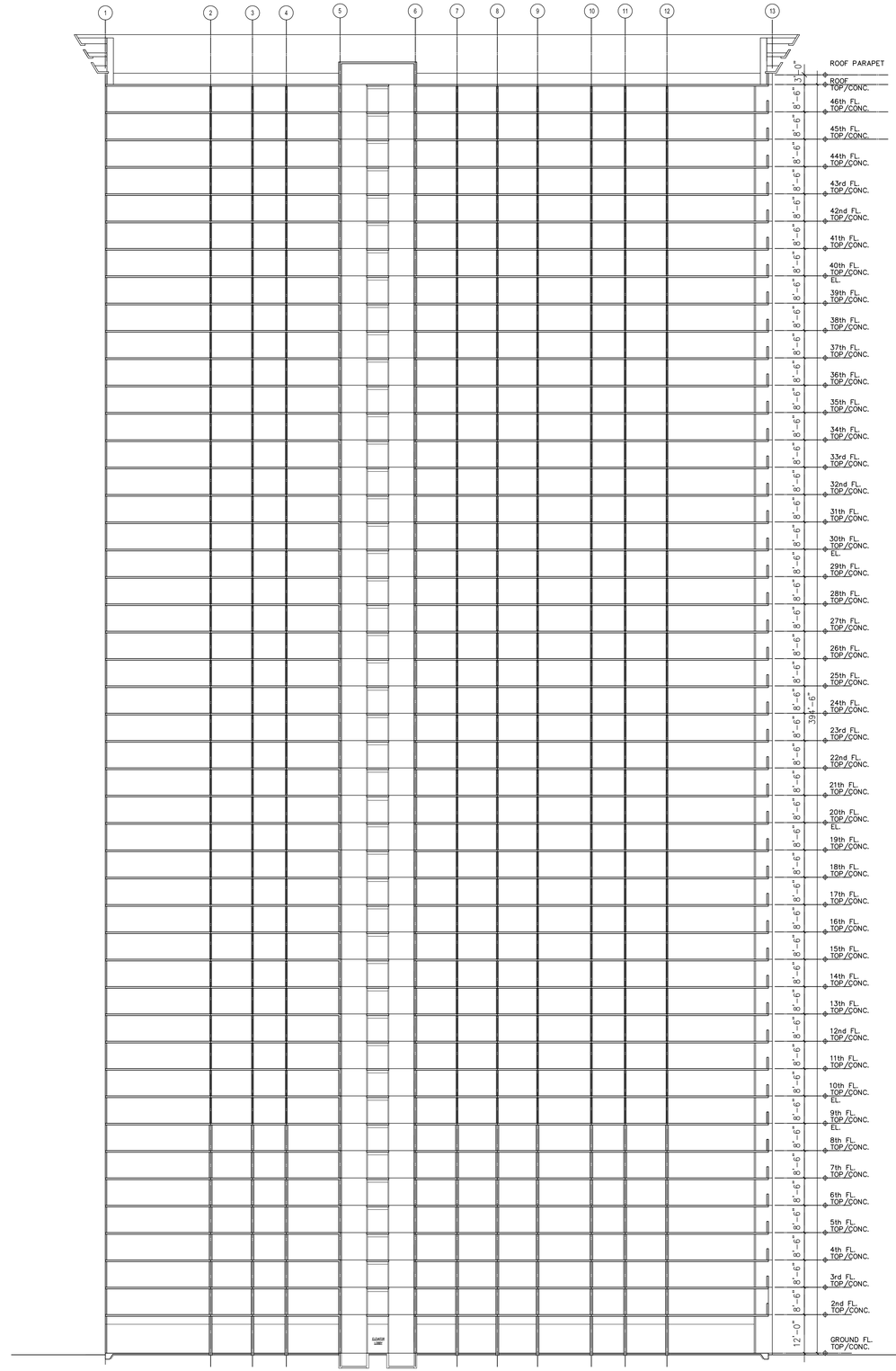

SECTION B
SCALE 1"=20' A3.0

NO.	DATE	REVISIONS
.	.	.

KAZUTOSHI YATO
LICENSED PROFESSIONAL ARCHITECT
No. 3271
HAWAII, U.S.A.

Expiration Date: 4/30/2014

THIS PROJECT WAS PREPARED BY ME OR UNDER MY SUPERVISION AND CONSTRUCTION OF THIS PROJECT WILL BE UNDER MY SUPERVISION.

KAKAAKO WORKFORCE HOUSING
SUBCHAPTER 4 OF 2011 MAUKA PLAN AND RULES

801 SOUTH STREET
HONOLULU, HAWAII

BUILDING SECTIONS

KAZU YATO, AIA & ASSOCIATES, INC.
2033 ROUNDTOP TERRACE
HONOLULU, HI 96822
TEL: (808) 945-0040
FAX: (808) 945-0041

DATE	DRAWN	CHECK	FILE
	AF	KY	

SHEET

A3.0

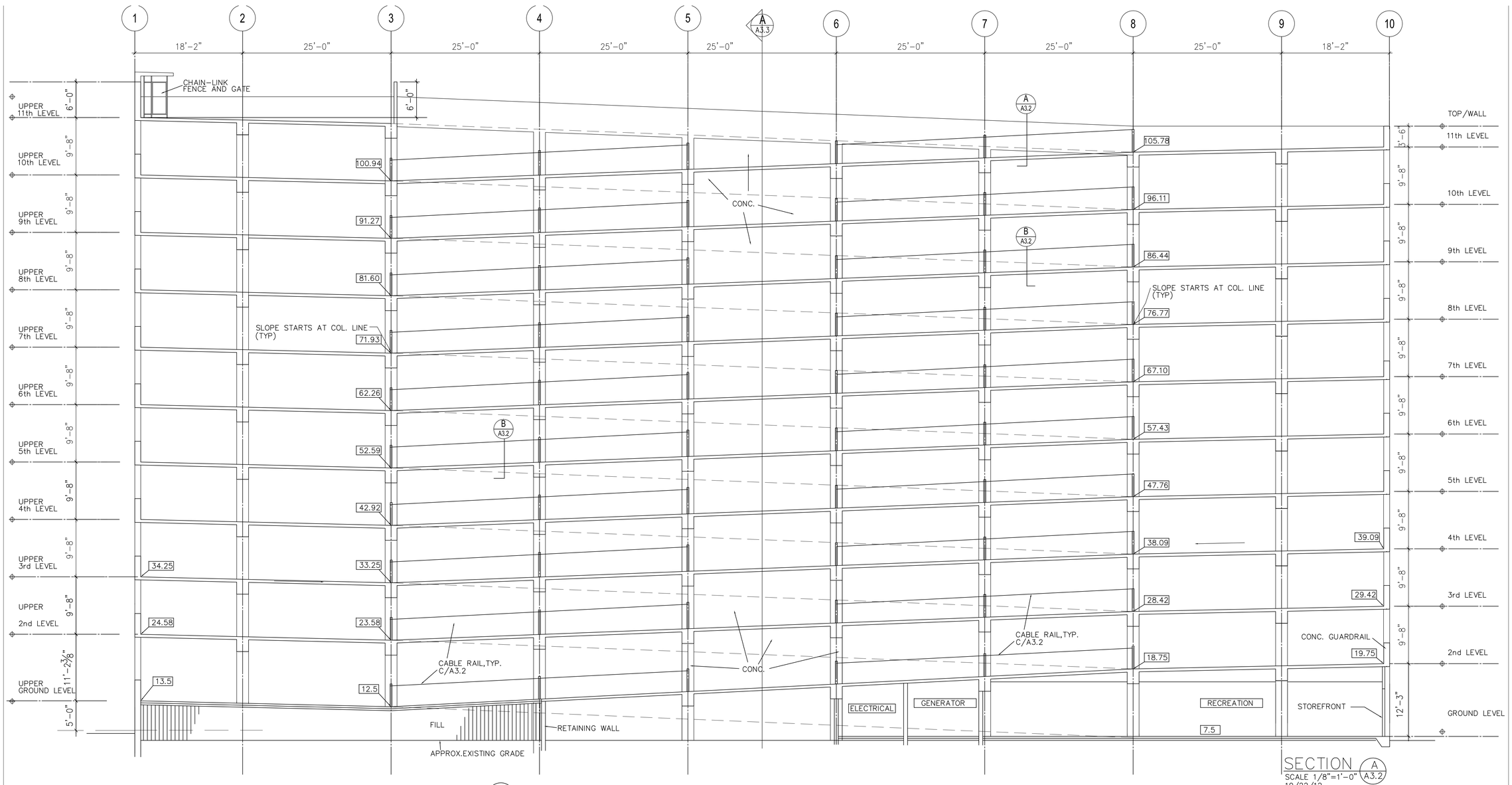

SECTION A A3.2
SCALE 1/8"=1'-0"
10/22/12

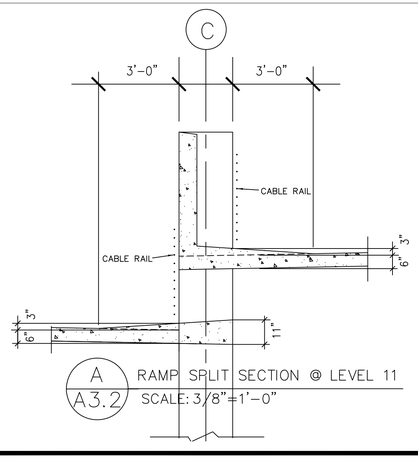

A A3.2 RAMP SPLIT SECTION @ LEVEL 11
SCALE: 3/8"=1'-0"

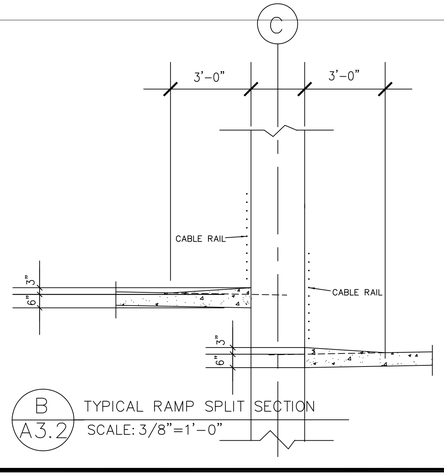

B A3.2 TYPICAL RAMP SPLIT SECTION
SCALE: 3/8"=1'-0"

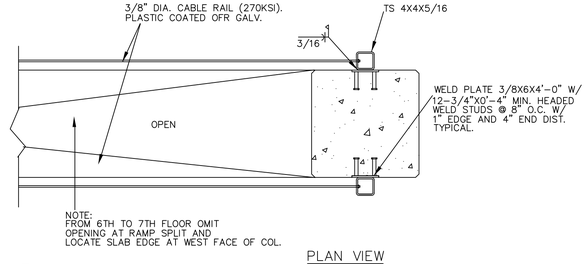

PLAN VIEW

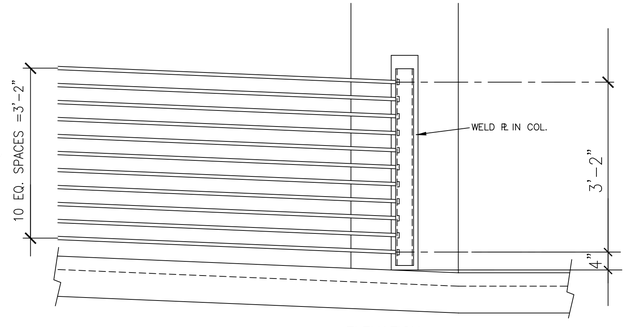

ELEVATION

C A3.2 CABLE RAIL SUPPORT DETAILS
SCALE: 3/4"=1'-0"

REVISIONS

NO.	DATE
.	.

KAZUTOSHI YATO
LICENSED PROFESSIONAL ARCHITECT
No.3271
HAWAII, U.S.A.
Expiration Date: 4/30/2014

THIS PROJECT WAS PREPARED BY ME OR UNDER MY SUPERVISION AND CONSTRUCTION OF THIS PROJECT WILL BE UNDER MY SUPERVISION.

KAKAAKO WORKFORCE HOUSING PER
SUBCHAPTER 4 OF 2011 MAUKA PLAN AND RULES

801 SOUTH STREET
HONOLULU, HAWAII

GARAGE - SECTION 1

KAZU YATO, AIA & ASSOCIATES,INC.
2033 ROUNDTOP TERRACE
HONOLULU, HI 96822
TEL: (808) 945-0040
FAX: (808) 945-0041

DATE	DRAWN	CHECK	FILE
	AF	KY	

SHEET

A3.2

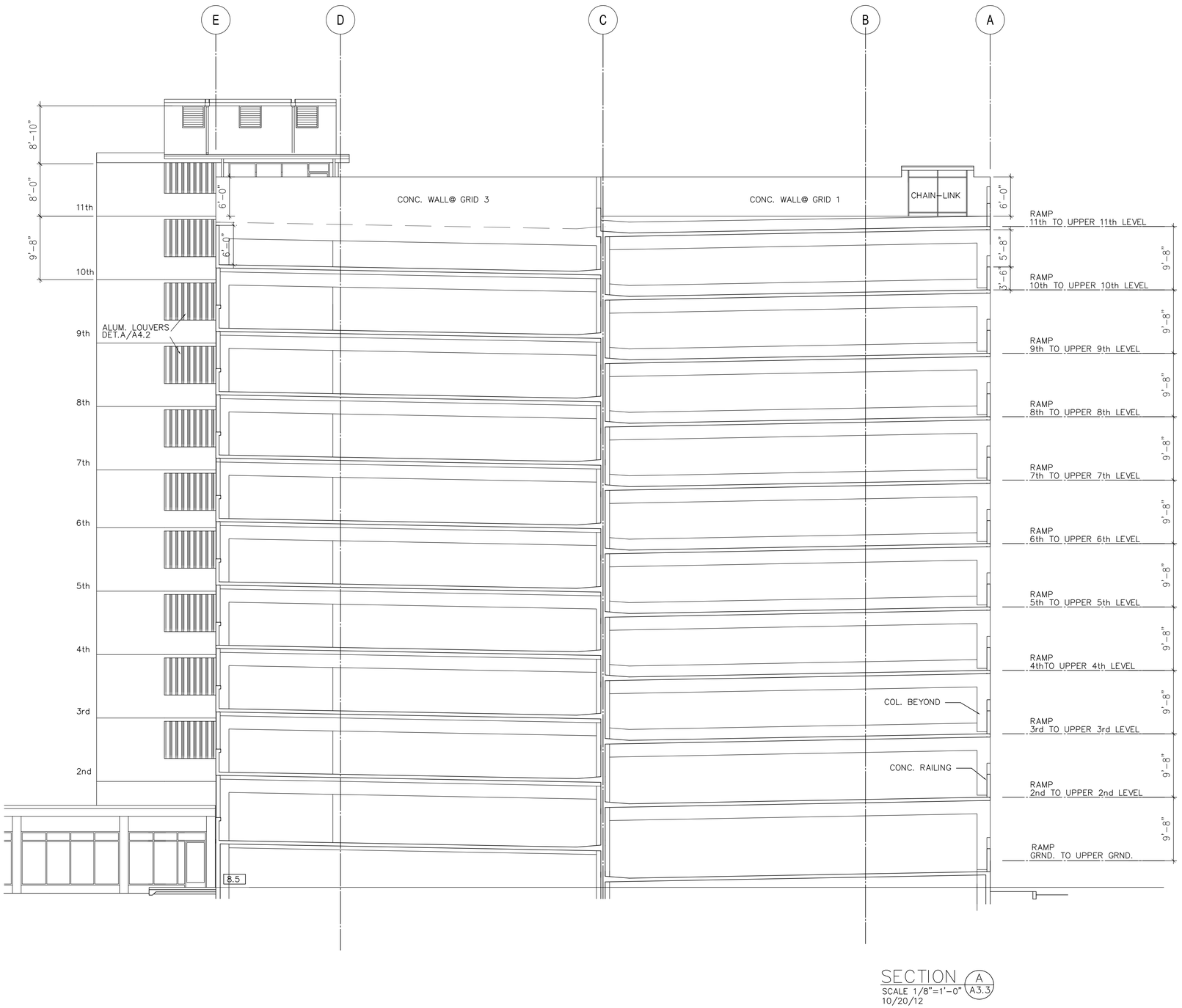

SECTION (A A3.3)
SCALE 1/8"=1'-0"
10/20/12

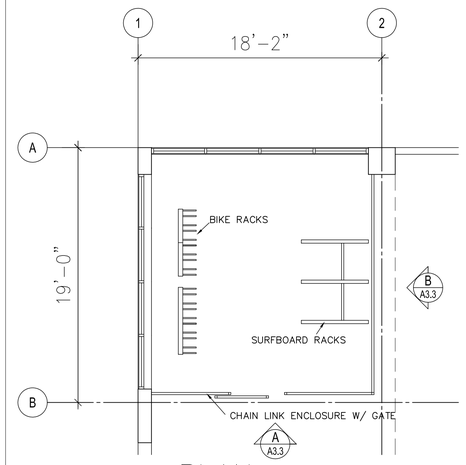

PLAN
SCALE: 1/4"=1'-0"

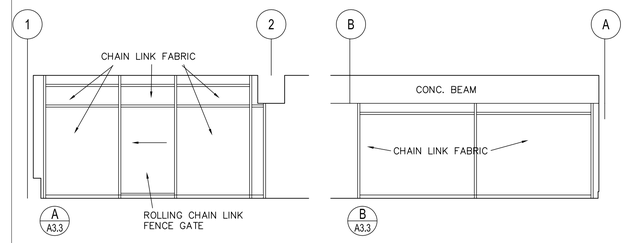

NOTE:
1. CHAIN LINK ENCLOSURE W/ GATE OCCUR ON LEVELS 2 THRU 8.
2. BIKE AND SURFBOARD RACKS OCCUR ON LEVEL 2 THRU 4.

A A3.3 BICYCLE PARKING

11/1/12

REVISIONS

NO.	DATE
.	.

KAZUTOSHI YATO
LICENSED PROFESSIONAL ARCHITECT
No. 3271
HAWAII, U.S.A.
Expiration Date: 4/30/2014

THIS PROJECT WAS PREPARED BY ME OR UNDER MY SUPERVISION AND CONSTRUCTION OF THIS PROJECT WILL BE UNDER MY SUPERVISION.

KAKAAKO WORKFORCE HOUSING PER
SUBCHAPTER 4 OF 2011 MAUKA PLAN AND RULES

801 SOUTH STREET
HONOLULU, HAWAII

GARAGE - SECTION 1

KAZU YATO, AIA & ASSOCIATES, INC.
2033 ROUNDTOP TERRACE
HONOLULU, HI 96822
TEL: (808) 945-0040
FAX: (808) 945-0041

DATE	DRAWN	CHECK	FILE
	AF	KY	

SHEET

A3.3

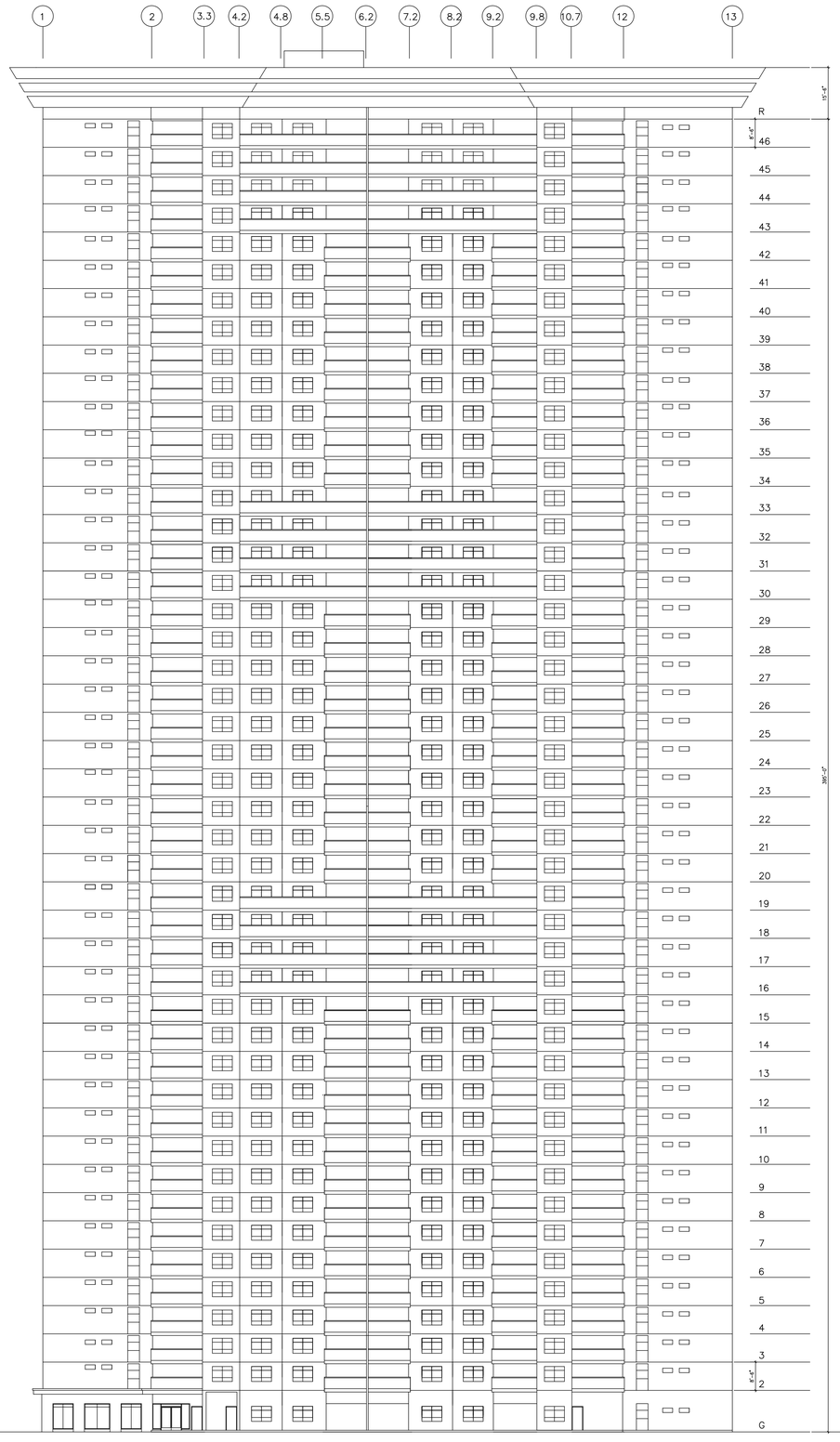

NORTH ELEVATION
SCALE: 1"=20'

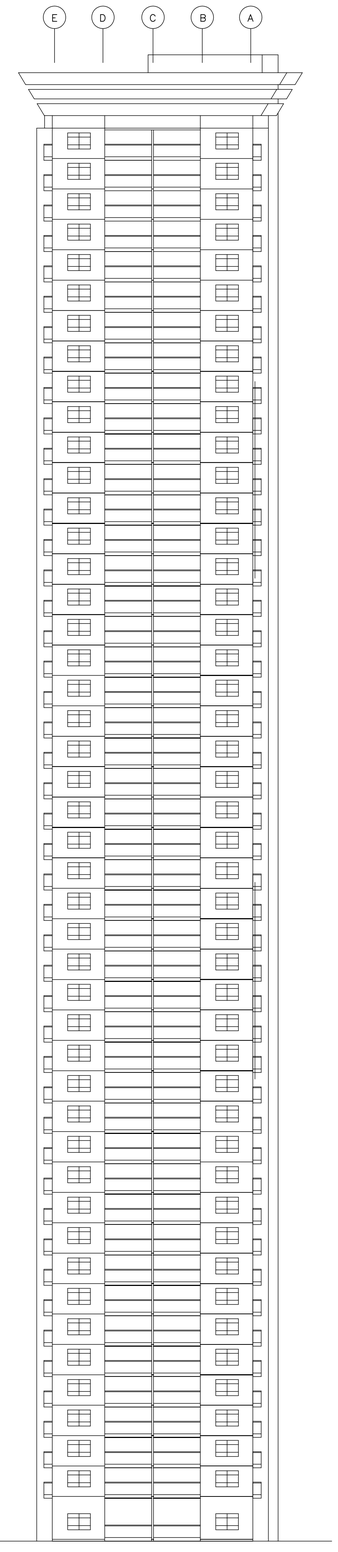

WEST ELEVATION
SCALE: 1"=20'

REVISIONS

NO.	DATE	
.	.	.

KAZUTOSHI YATO
LICENSED PROFESSIONAL ARCHITECT
No. 3271
HAWAII, U.S.A.
Expiration Date: 4/30/2014

THIS PROJECT WAS PREPARED BY ME OR UNDER MY SUPERVISION AND CONSTRUCTION OF THIS PROJECT WILL BE UNDER MY SUPERVISION.

KAKAAKO WORKFORCE HOUSING PER SUBCHAPTER 4 OF 2011 MAUKA PLAN AND RULES

801 SOUTH STREET
HONOLULU, HAWAII

EXTERIOR ELEVATIONS

KAZU YATO, AIA & ASSOCIATES, INC.
2033 ROUNDTOP TERRACE
HONOLULU, HI 96822
TEL: (808) 945-0040
FAX: (808) 945-0041

DATE	DRAWN	CHECK	FILE
	KY		

SHEET

A4.0

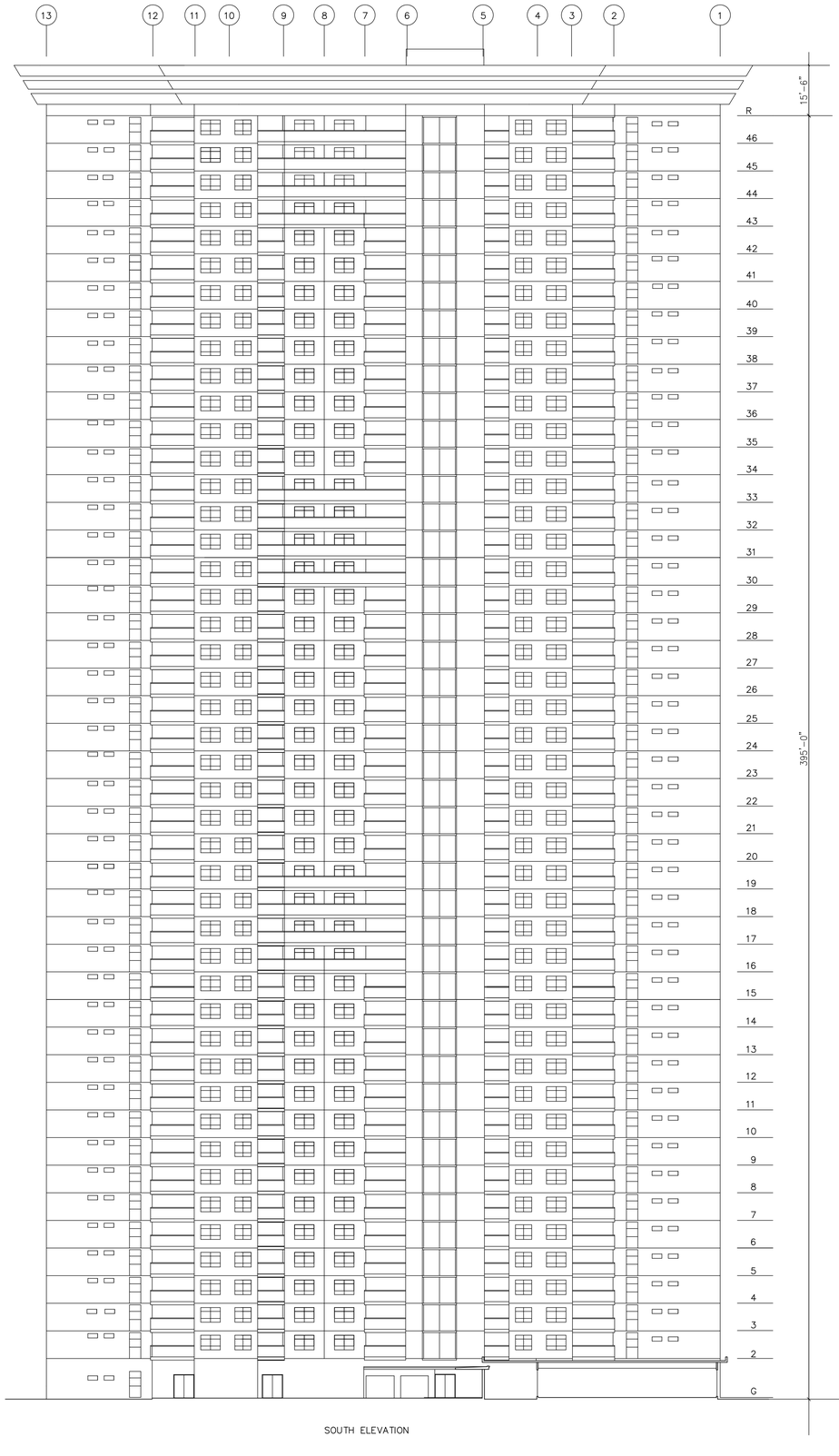

SOUTH ELEVATION

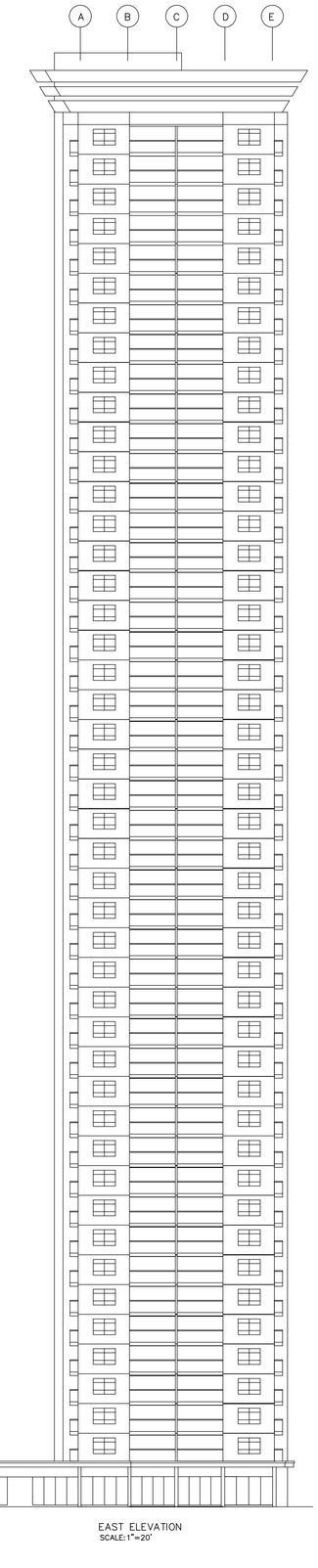

EAST ELEVATION
SCALE:1"=20'

NO.	DATE	REVISIONS
.	.	.

KAZUTOSHI YATO
LICENSED PROFESSIONAL ARCHITECT
No.3271
HAWAII U.S.A.
Expiration Date: 4/30/2014

THIS PROJECT WAS PREPARED BY ME OR UNDER MY SUPERVISION AND CONSTRUCTION OF THIS PROJECT WILL BE UNDER MY SUPERVISION.

KAKAAKO WORKFORCE HOUSING
SUBCHAPTER 4 OF 2011 MAUKA PLAN AND RULES

801 SOUTH STREET
HONOLULU, HAWAII

EXTERIOR ELEVATIONS

KAZU YATO, AIA & ASSOCIATES, INC.
2033 ROUNDTOP TERRACE
HONOLULU, HI 96822
TEL: (808) 945-0040
FAX: (808) 945-0041

DATE	DRAWN	CHECK	FILE
	KY		

SHEET

A4.1

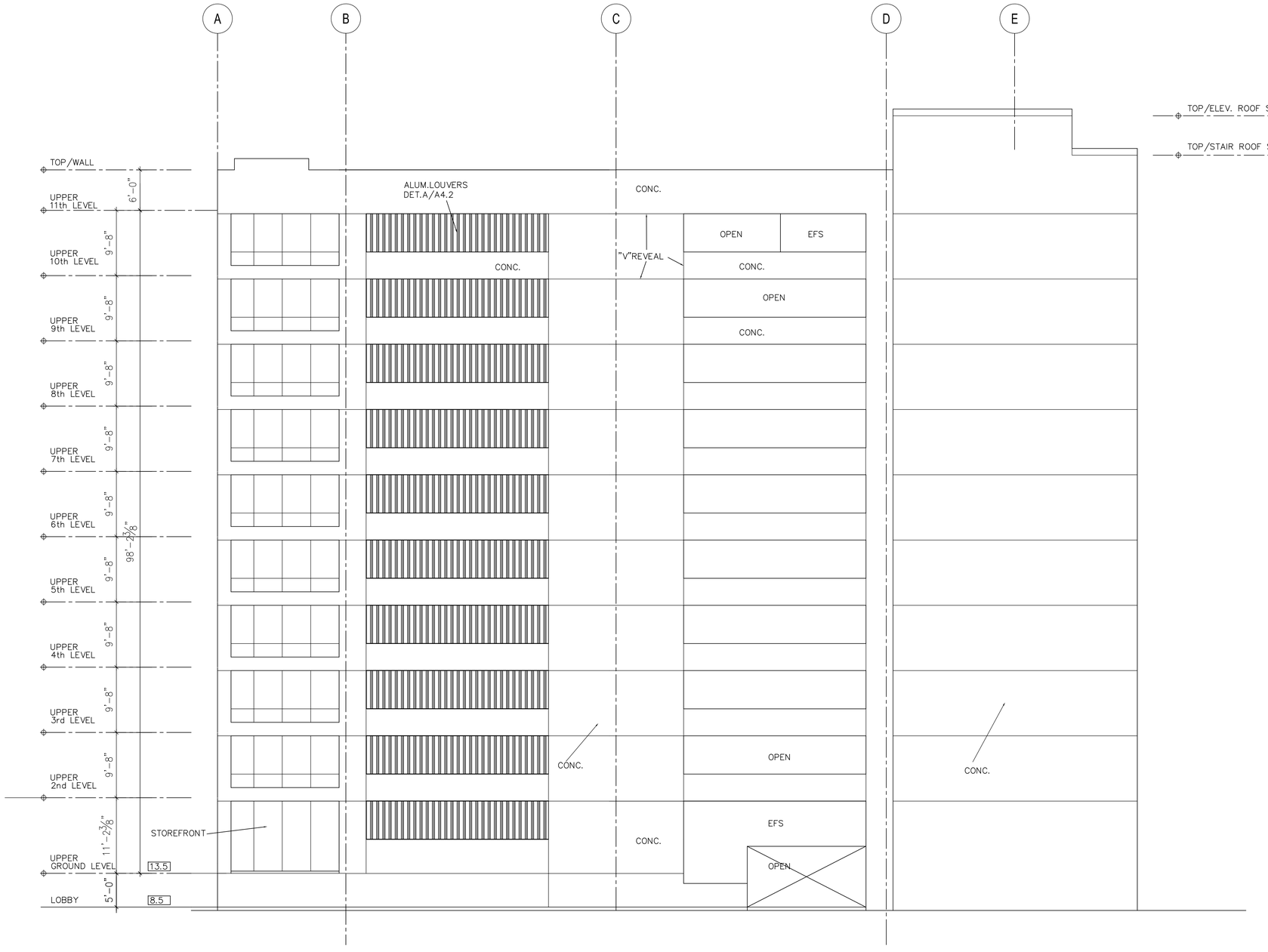

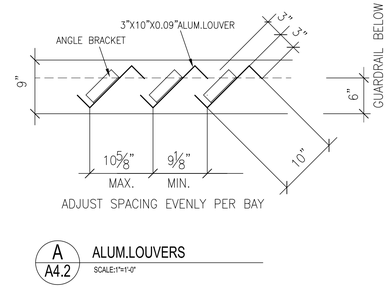

A4.2 A ALUM.LOUVERS
SCALE:1"=1'-0"

GARAGE–EAST ELEVATION

SCALE 1/8"=1'-0"
10/19/12

NO.	DATE	REVISIONS
.	.	.

KAZUTOSHI YATO
LICENSED PROFESSIONAL ARCHITECT
No.3271
HAWAII, U.S.A.
Expiration Date: 4/30/2014

THIS PROJECT WAS PREPARED BY ME OR UNDER MY SUPERVISION AND CONSTRUCTION OF THIS PROJECT WILL BE UNDER MY SUPERVISION.

KAKAAKO WORKFORCE HOUSING PER
SUBCHAPTER 4 OF 2011 MAUKA PLAN AND RULES

801 SOUTH STREET
HONOLULU, HAWAII

GARAGE EAST ELEVATION

KAZU YATO, AIA & ASSOCIATES,INC.
2033 ROUNDTOP TERRACE
HONOLULU, HI 96822
TEL: (808) 945-0040
FAX: (808) 945-1041

DATE	DRAWN	CHECK	FILE
	KY	KY	

SHEET

A4.2

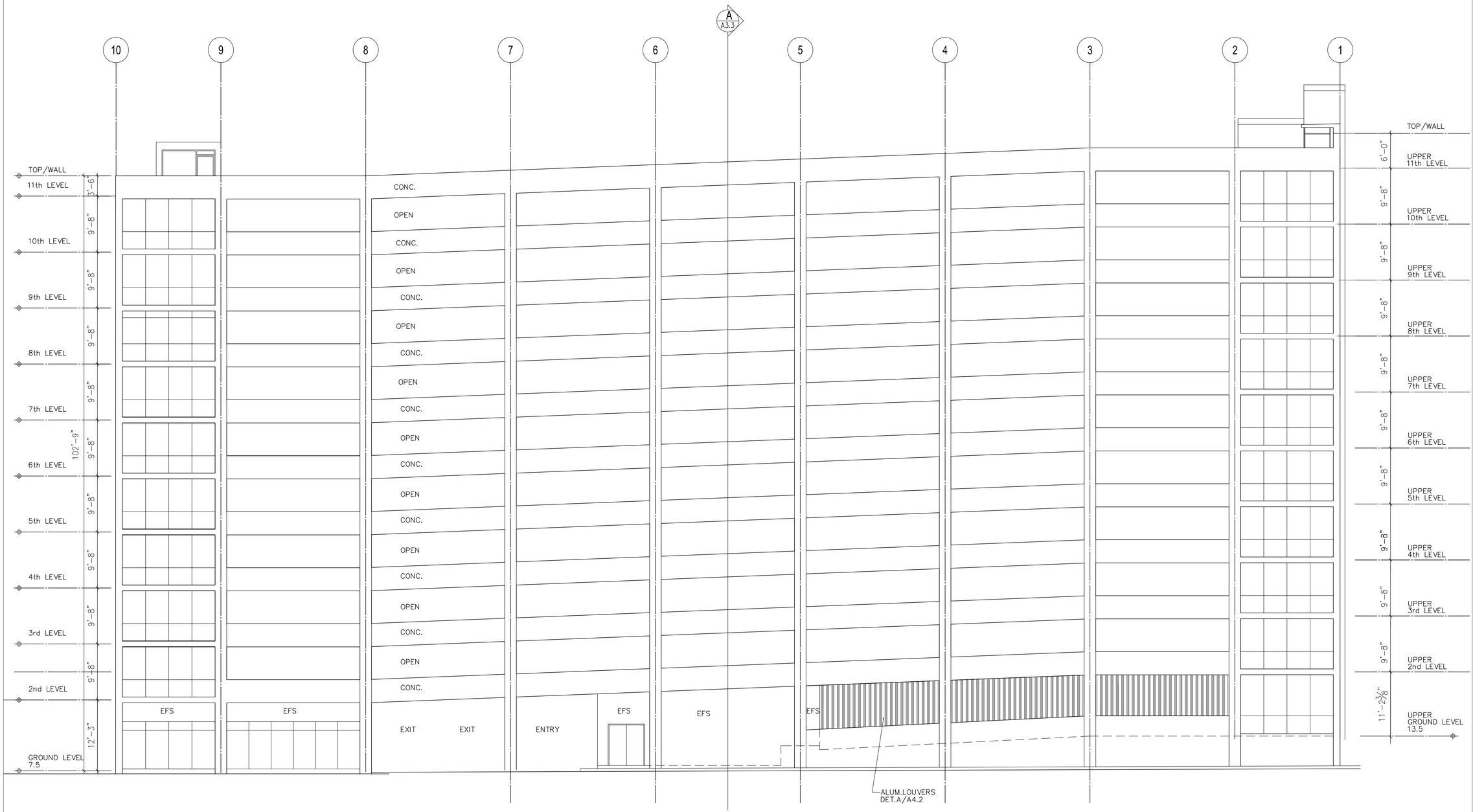

GARAGE–SOUTH ELEVATION

SCALE 1/8"=1'–0"
10/19/12

NO.	DATE	REVISIONS
.	.	.

KAZUTOSHI YATO
LICENSED PROFESSIONAL ARCHITECT
No. 3271
HAWAII, U.S.A.
Expiration Date: 4/30/2014

THIS PROJECT WAS PREPARED BY ME OR UNDER MY SUPERVISION AND CONSTRUCTION OF THIS PROJECT WILL BE UNDER MY SUPERVISION.

KAKAAKO WORKFORCE HOUSING PER
SUBCHAPTER 4 OF 2011 MAUKA PLAN AND RULES

801 SOUTH STREET
HONOLULU, HAWAII

GARAGE SOUTH ELEVATION

KAZU YATO, AIA & ASSOCIATES, INC.
2033 ROOKTOP TERRACE
HONOLULU, HI 96822
TEL: (808) 945-0040
FAX: (808) 945-0041

DATE	DRAWN	CHECK	FILE
	KY	KY	

SHEET

A4.3

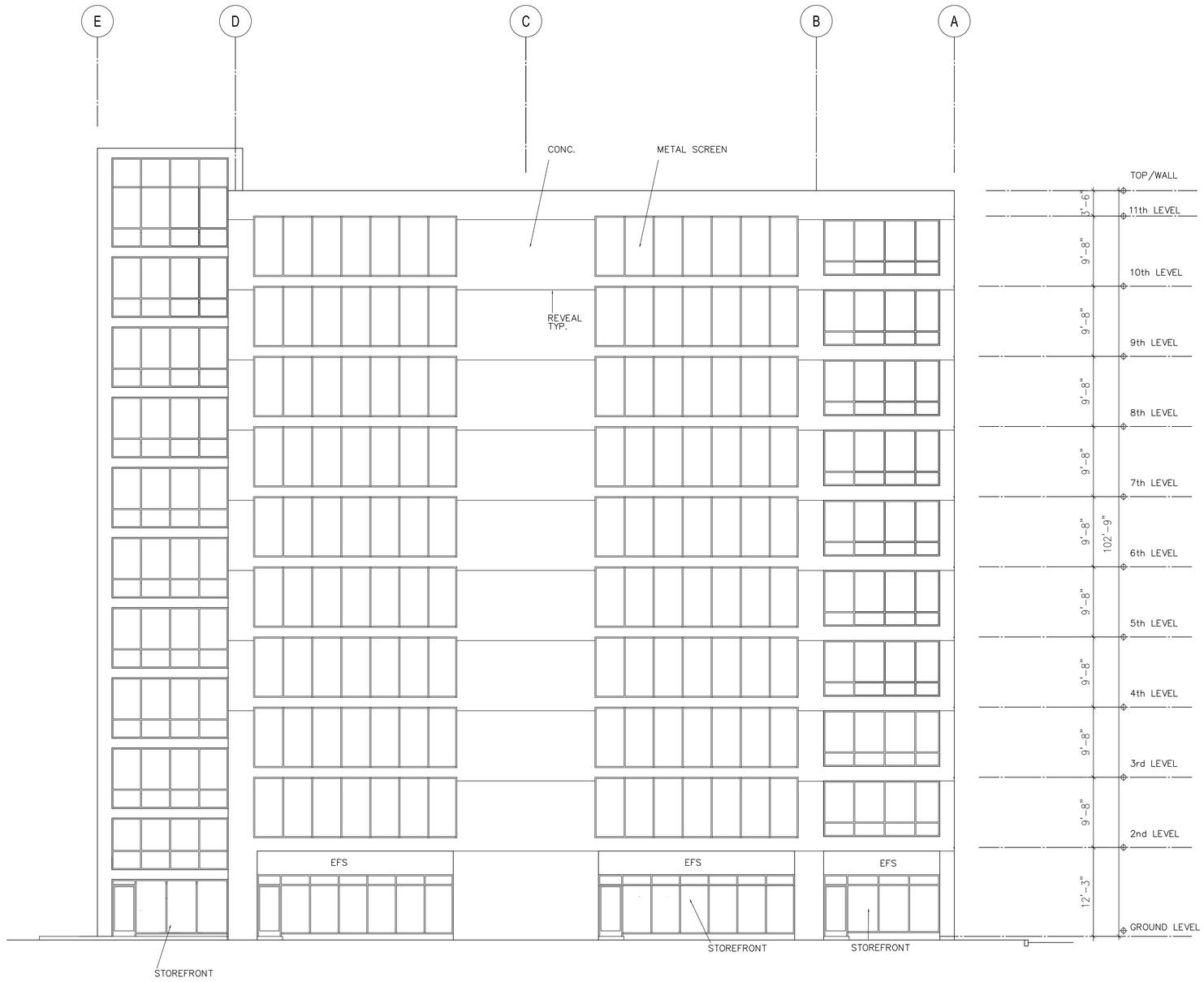

GARAGE–WEST ELEVATION

SCALE 1/8"=1'-0"
10/20/12

NO.	DATE	REVISIONS
.	.	.

KAZUTOSHI YATO
LICENSED PROFESSIONAL ARCHITECT
No. 3271
HAWAII, U.S.A.

Expiration Date: 4/30/2014

THIS PROJECT WAS PREPARED BY ME OR UNDER MY SUPERVISION AND CONSTRUCTION OF THIS PROJECT WILL BE UNDER MY SUPERVISION.

KAKAAKO WORKFORCE HOUSING PER

SUBCHAPTER 4 OF 2011 MAUKA PLAN AND RULES

801 SOUTH STREET
HONOLULU, HAWAII

GARAGE WEST ELEVATIONS

KAZU YATO, AIA & ASSOCIATES, INC.
2033 ROYALTOP TERRACE
HONOLULU, HI 96822
TEL: (808) 945-2040
FAX: (808) 945-2041

DATE	DRAWN	CHECK	FILE
	KY	KY	

SHEET

A4.4

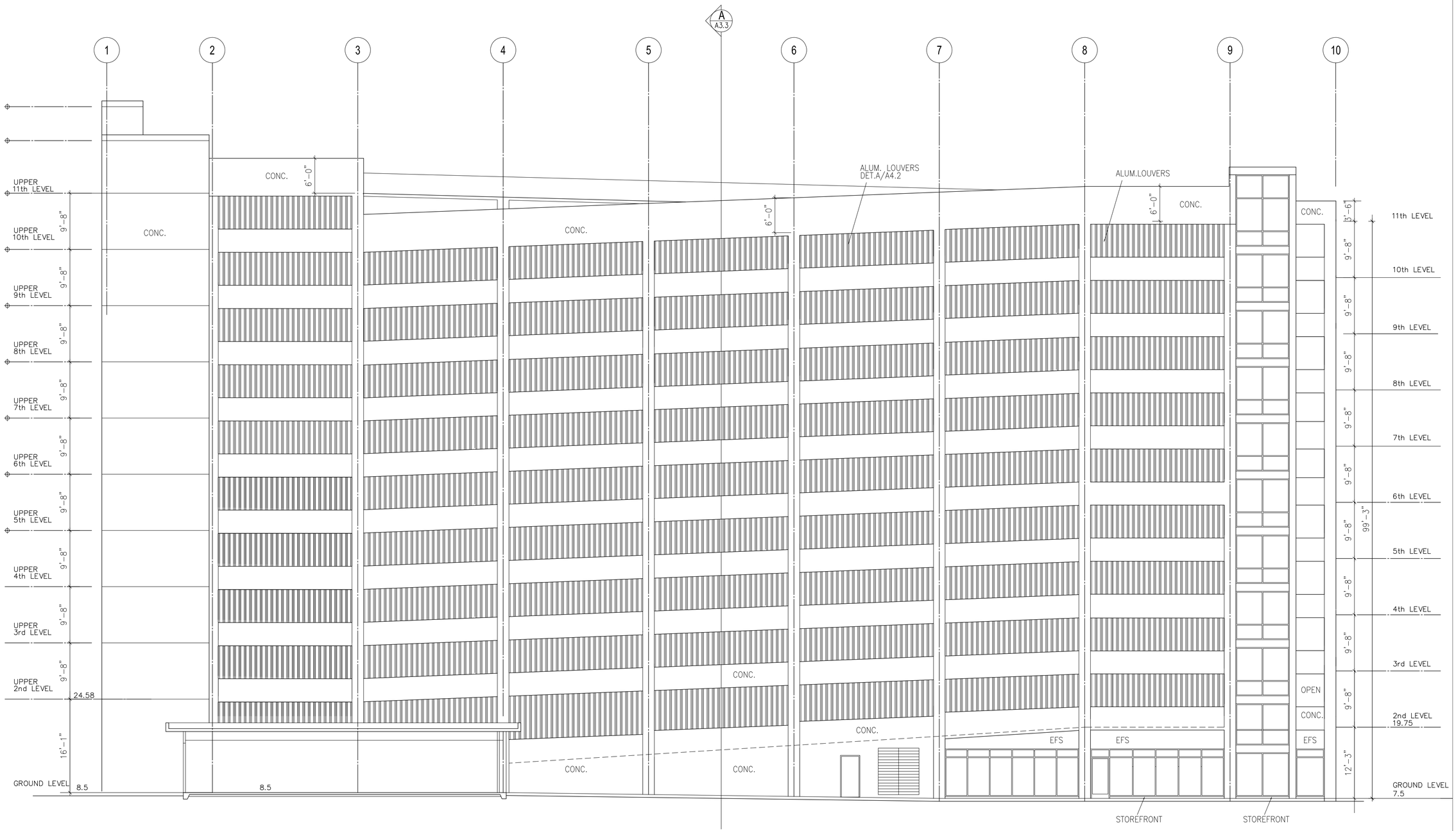

GARAGE—NORTH ELEVATION

SCALE 1/8"=1'-0"

10/19/12

REVISIONS

NO.	DATE
.	.

AZUTOSHI YATO
LICENSED PROFESSIONAL ARCHITECT
No. 3271
HAWAII, U.S.A.

Expiration Date: 4/30/2014

THIS PROJECT WAS PREPARED BY ME OR UNDER MY SUPERVISION AND CONSTRUCTION OF THIS PROJECT WILL BE UNDER MY SUPERVISION.

KAKAAKO WORKFORCE HOUSING PER SUBCHAPTER 4 OF 2011 MAUKA PLAN AND RULES

801 SOUTH STREET
HONOLULU, HAWAII

GARAGE-NORTH ELEVATION

KAZU YATO, AIA & ASSOCIATES, INC.
2033 ROYALTOP TERRACE
HONOLULU, HI 96822
TEL: (808) 945-2040
FAX: (808) 945-2041

DATE	DRAWN	CHECK	FILE
	KY		

SHEET

A4.5

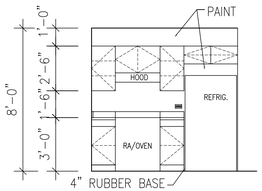

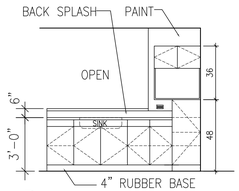

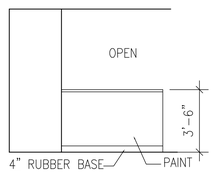

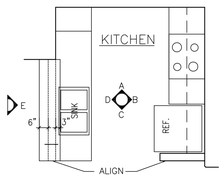

UNIT 01 – SHOWN

TYPE–1 KITCHEN ELEVATIONS

SCALE: 1/4" = 1'–0"

2ND FLOOR UNIT PLAN–201 (SEE A2.4)
LIKE UNITS SIMILAR FROM 3RD THRU 8TH FLOOR
9TH FLOOR UNIT PLAN–901 (SEE A2.12)
LIKE UNITS SIMILAR 10TH THRU 46TH FLOOR

GROUND FLOOR UNIT PLAN–114 (SEE A2.3)
2ND FLOOR UNIT PLAN–214 (SEE A2.11)
LIKE UNITS SIMILAR FROM 3RD THRU 8TH FLOOR
9TH FLOOR UNIT PLAN–914 (SEE A2.19)
LIKE UNITS SIMILAR FROM 10TH THRU 46TH FLOOR

UNIT 01 – SHOWN
UNIT 14 – SAME

PLAN

SCALE: 1/4" = 1'–0"

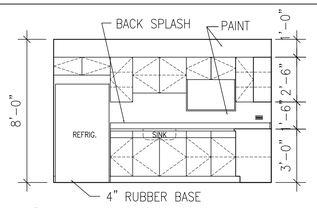

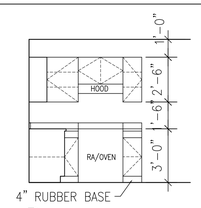

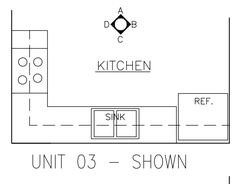

UNIT 03 – SHOWN

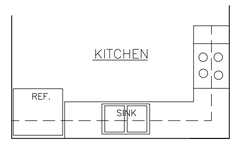

UNIT 11– MIRROR

UNIT 03 – SHOWN

TYPE–2 KITCHEN ELEVATION

SCALE: 1/4" = 1'–0"

2ND FLOOR UNIT PLANS–203 (SEE A2.4)
LIKE UNITS SIMILAR FROM 3RD THRU 8TH FLOOR
9TH FLOOR UNIT PLAN–903 (SEE A2.12)
LIKE UNITS SIMILAR 10TH THRU 46TH FLOOR

2ND FLOOR UNIT PLANS–211 (SEE A2.8)
LIKE UNITS SIMILAR FROM 3RD THRU 8TH FLOOR
9TH FLOOR UNIT PLAN–911 (SEE A2.16)
LIKE UNITS SIMILAR 10TH THRU 46TH FLOOR

PLANS

SCALE: 1/4" = 1'–0"

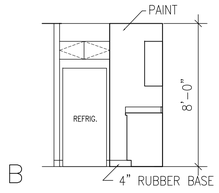

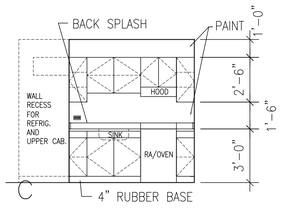

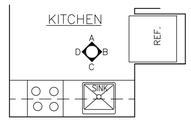

UNIT 05 – SHOWN

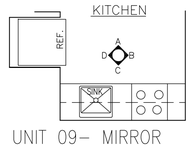

UNIT 09– MIRROR

UNIT 05 – SHOWN

TYPE–4 KITCHEN ELEVATION

SCALE: 1/4" = 1'–0"

2ND FLOOR UNIT PLAN–205 (SEE A2.6)
LIKE UNITS SIMILAR FROM 3RD THRU 8TH FLOOR.
9TH FLOOR UNIT PLAN–905 (SEE A2.14)
LIKE UNITS SIMILAR 10TH THRU 46TH FLOOR

2ND FLOOR UNIT PLANS–209 (SEE A2.8)
LIKE UNITS SIMILAR FROM 3RD THRU 8TH FLOOR
9TH FLOOR UNIT PLAN–909 (SEE A2.16)
LIKE UNITS SIMILAR 10TH THRU 46TH FLOOR

PLANS

SCALE: 1/4" = 1'–0"

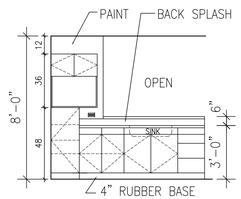

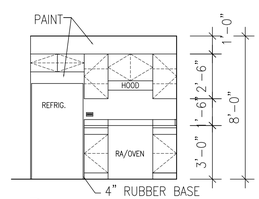

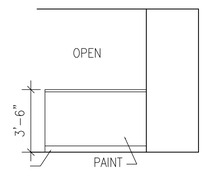

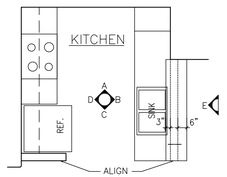

UNIT 13 – SHOWN
UNIT 02 – SAME

PLAN

SCALE: 1/4" = 1'–0"

UNIT 13 – SHOWN

TYPE–1A KITCHEN ELEVATIONS

SCALE: 1/4" = 1'–0"

GROUND FLOOR UNIT PLAN–113 (SEE A2.2)
2ND FLOOR UNIT PLAN–213 (SEE A2.10)
LIKE UNITS SIMILAR FROM 3RD THRU 8TH FLOOR.
9TH FLOOR UNIT PLAN–913 (SEE A2.18)
LIKE UNITS SIMILAR 10TH THRU 46TH FLOOR

2ND FLOOR UNIT PLAN–202 (SEE A2.5)
LIKE UNITS SIMILAR FROM 3RD THRU 8TH FLOOR.
9TH FLOOR UNIT PLAN–902 (SEE A2.13)
LIKE UNITS SIMILAR 10TH THRU 46TH FLOOR

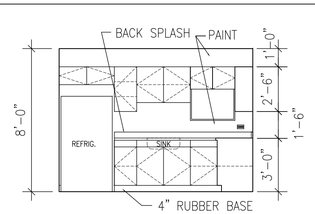

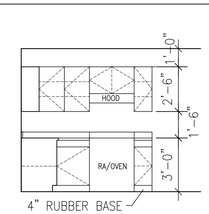

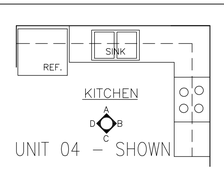

UNIT 04 – SHOWN

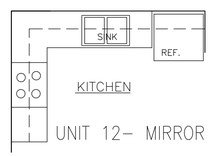

UNIT 12– MIRROR

UNIT 04 – SHOWN

TYPE–3 KITCHEN ELEVATIONS

SCALE: 1/4" = 1'–0"

2ND FLOOR UNIT PLAN–204 (SEE A2.5)
LIKE UNITS SIMILAR FROM 3RD THRU 8TH FLOOR.
9TH FLOOR UNIT PLANS–904 (SEE A2.13)
LIKE UNITS SIMILAR 10TH THRU 46TH FLOOR

2ND FLOOR UNIT PLAN–212 (SEE A2.9)
LIKE UNITS SIMILAR FROM 3RD THRU 8TH FLOOR.
9TH FLOOR UNIT PLAN–912 (SEE A2.17)
LIKE UNITS SIMILAR 10TH THRU 46TH FLOOR

PLANS

SCALE: 1/4" = 1'–0"

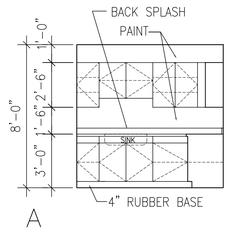

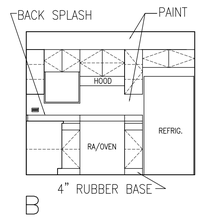

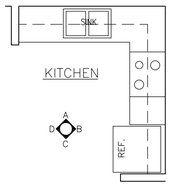

UNIT 06 – SHOWN
UNIT 07 – SAME
UNIT 10 – SAME

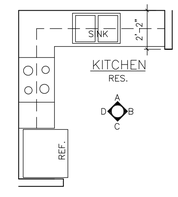

UNIT 08 – MIRROR

UNIT 06 – SHOWN

TYPE–5 KITCHEN ELEVATIONS

SCALE: 1/4" = 1'–0"

GROUND FLOOR UNIT PLAN–106 (SEE A2.0)
2ND FLOOR UNIT PLAN–206 (SEE A2.7)
LIKE UNITS SIMILAR FROM 3RD THRU 8TH FLOOR.
9TH FLOOR UNIT PLANS–906 (SEE A2.15)
LIKE UNITS SIMILAR 10TH THRU 46TH FLOOR

2ND FLOOR UNIT PLAN–207 (SEE A2.6)
LIKE UNITS SIMILAR FROM 3RD THRU 8TH FLOOR.
9TH FLOOR UNIT PLAN–907 (SEE A2.14)
LIKE UNITS SIMILAR 10TH THRU 46TH FLOOR

GROUND FLOOR UNIT PLAN–110 BATH–1 (SEE A2.1)
2ND FLOOR UNIT PLANS–210 (SEE A2.9)
LIKE UNITS SIMILAR FROM 3RD THRU 8TH FLOOR
9TH FLOOR UNIT PLAN–910 (SEE A2.17)
LIKE UNITS SIMILAR 10TH THRU 46TH FLOOR

GROUND FLOOR UNIT PLAN–108 (SEE A2.0)
2ND FLOOR UNIT PLANS–208 (SEE A2.7)
LIKE UNITS SIMILAR FROM 3RD THRU 8TH FLOOR.
9TH FLOOR UNIT PLANS 908 (SEE A2.15)
LIKE UNITS SIMILAR 10TH THRU 46TH FLOOR

PLAN

SCALE: 1/4" = 1'–0"

NOV. 1, 2012

NO.	DATE	REVISIONS
.	.	.

KAZUTOSHI YATO
LICENSED PROFESSIONAL ARCHITECT
No.3271
HAWAII, U.S.A.
Expiration Date: 4/30/2014

THIS PROJECT WAS PREPARED BY ME OR UNDER MY SUPERVISION AND CONSTRUCTION OF THIS PROJECT WILL BE UNDER MY SUPERVISION.

KAKAAKO WORKFORCE HOUSING PER SUBCHAPTER 4 OF 2011 MAUKA PLAN AND RULES
801 SOUTH STREET
HONOLULU, HAWAII
KITCHEN ELEVATIONS

KAZU YATO, AIA & ASSOCIATES,INC.
2013 ROOSEVELT TERRACE
HONOLULU HI 96822
TEL: (808) 945-0040
FAX: (808) 945-0041

DATE	DRAWN	CHECK	FILE
	AF	KY	

SHEET

A5.0

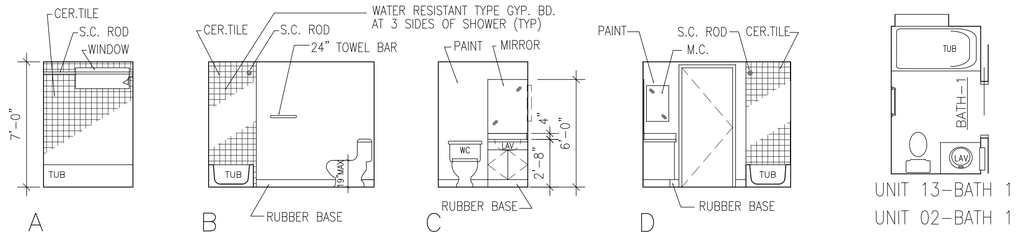

2ND FLOOR UNIT PLAN-201 (SEE A2.4)
LIKE UNITS SIMILAR FROM 3RD THRU 8TH FLOOR

9TH FLOOR UNIT PLAN-901 (SEE A2.12)
LIKE UNITS SIMILAR 10TH THRU 46TH FLOOR

GROUND FLOOR UNIT PLAN-113 (SEE A2.2)

2ND FLOOR UNIT PLAN-213 (SEE A2.10)
LIKE UNITS SIMILAR FROM 3RD THRU 8TH FLOOR.

9TH FLOOR UNIT PLAN-913 (SEE A2.18)
LIKE UNITS SIMILAR 10TH THRU 46TH FLOOR

GROUND FLOOR UNIT PLAN-114 (SEE A2.3)

2ND FLOOR UNIT PLAN-214 (SEE A2.11)
LIKE UNITS SIMILAR FROM 3RD THRU 8TH FLOOR

9TH FLOOR UNIT PLAN-914 (SEE A2.19)
LIKE UNITS SIMILAR FROM 10TH THRU 46TH FLOOR

2ND FLOOR UNIT PLAN-202 (SEE A2.5)
LIKE UNITS SIMILAR FROM 3RD THRU 8TH FLOOR.

9TH FLOOR UNIT PLAN-902 (SEE A2.13)
LIKE UNITS SIMILAR 10TH THRU 46TH FLOOR

UNIT 01-BATH 1 SHOWN

TYPE-1 BATH ELEVATIONS

SCALE: 1/4" = 1'-0"

PLAN

SCALE: 1/4" = 1'-0"

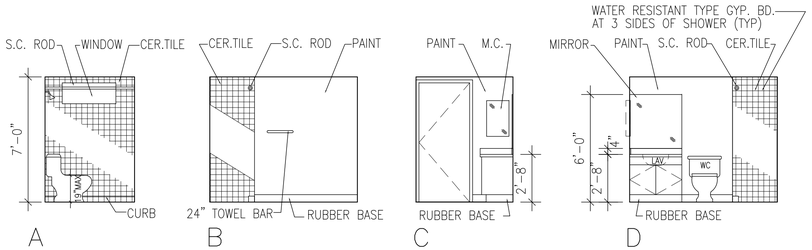

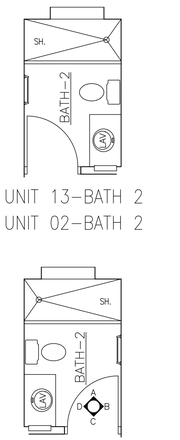

2ND FLOOR UNIT PLAN-201 (SEE A2.4)
LIKE UNITS SIMILAR FROM 3RD THRU 8TH FLOOR

9TH FLOOR UNIT PLAN-901 (SEE A2.12)
LIKE UNITS SIMILAR 10TH THRU 46TH FLOOR

GROUND FLOOR UNIT PLAN-114 (SEE A2.3)

2ND FLOOR UNIT PLAN-214 (SEE A2.11)
LIKE UNITS SIMILAR FROM 3RD THRU 8TH FLOOR

9TH FLOOR UNIT PLAN-914 (SEE A2.19)
LIKE UNITS SIMILAR FROM 10TH THRU 46TH FLOOR

GROUND FLOOR UNIT PLAN-113 (SEE A2.2)

2ND FLOOR UNIT PLAN-213 (SEE A2.10)
LIKE UNITS SIMILAR FROM 3RD THRU 8TH FLOOR.

9TH FLOOR UNIT PLAN-913 (SEE A2.18)
LIKE UNITS SIMILAR 10TH THRU 46TH FLOOR

2ND FLOOR UNIT PLAN-202 (SEE A2.5)
LIKE UNITS SIMILAR FROM 3RD THRU 8TH FLOOR.

9TH FLOOR UNIT PLAN-902 (SEE A2.13)
LIKE UNITS SIMILAR 10TH THRU 46TH FLOOR

UNIT 01-BATH 2 SHOWN

TYPE-2 BATH ELEVATIONS

SCALE: 1/4" = 1'-0"

PLAN

SCALE: 1/4" = 1'-0"

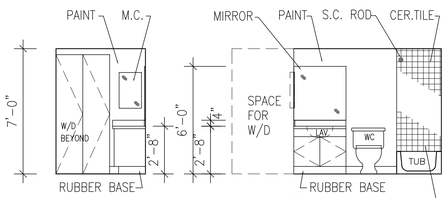

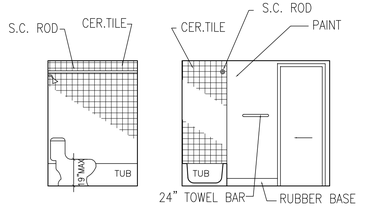

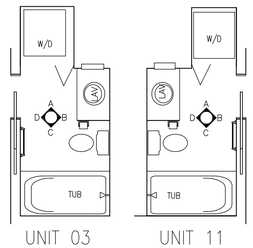

2ND FLOOR UNIT PLANS-203 (SEE A2.4)
LIKE UNITS SIMILAR FROM 3RD THRU 8TH FLOOR

9TH FLOOR UNIT PLAN-903 (SEE A2.12)
LIKE UNITS SIMILAR 10TH THRU 46TH FLOOR

2ND FLOOR UNIT PLANS-211 (SEE A2.8)
LIKE UNITS SIMILAR FROM 3RD THRU 8TH FLOOR

9TH FLOOR UNIT PLAN-911 (SEE A2.16)
LIKE UNITS SIMILAR 10TH THRU 46TH FLOOR

UNIT 03 - SHOWN

TYPE-3 BATH ELEVATIONS

SCALE: 1/4" = 1'-0"

PLAN

SCALE: 1/4" = 1'-0"

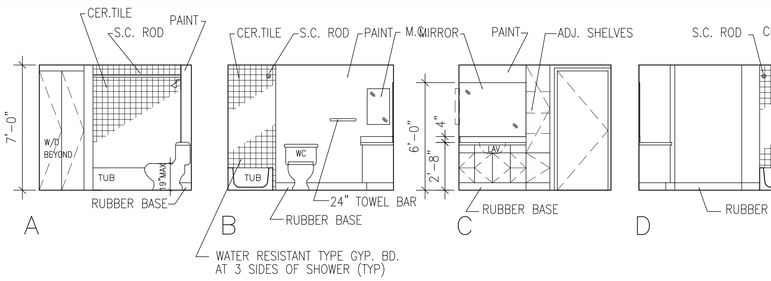

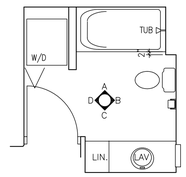

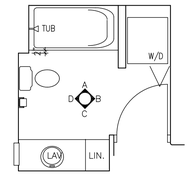

2ND FLOOR UNIT PLAN-204 (SEE A2.5)
LIKE UNITS SIMILAR FROM 3RD THRU 8TH FLOOR.

9TH FLOOR UNIT PLANS-904 (SEE A2.13)
LIKE UNITS SIMILAR 10TH THRU 46TH FLOOR

2ND FLOOR UNIT PLAN-212 (SEE A2.9)
LIKE UNITS SIMILAR FROM 3RD THRU 8TH FLOOR.

9TH FLOOR UNIT PLAN-912 (SEE A2.17)
LIKE UNITS SIMILAR 10TH THRU 46TH FLOOR

UNIT 04 - SHOWN

TYPE-4 BATH ELEVATIONS

SCALE: 1/4" = 1'-0"

PLAN

SCALE: 1/4" = 1'-0"

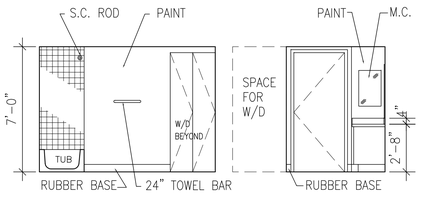

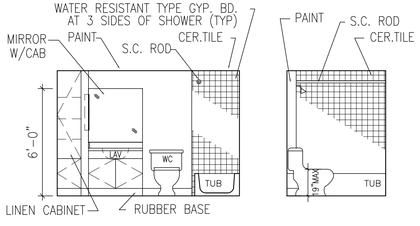

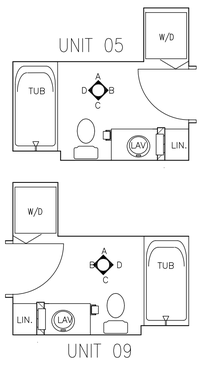

2ND FLOOR UNIT PLAN-205 (SEE A2.6)
LIKE UNITS SIMILAR FROM 3RD THRU 8TH FLOOR.

9TH FLOOR UNIT PLAN-905 (SEE A2.14)
LIKE UNITS SIMILAR 10TH THRU 46TH FLOOR

2ND FLOOR UNIT PLANS-209 (SEE A2.8)
LIKE UNITS SIMILAR FROM 3RD THRU 8TH FLOOR

9TH FLOOR UNIT PLAN-909 (SEE A2.16)
LIKE UNITS SIMILAR 10TH THRU 46TH FLOOR

UNIT 05 - SHOWN

TYPE-5 BATH ELEVATIONS

SCALE: 1/4" = 1'-0"

PLAN

SCALE: 1/4" = 1'-0"

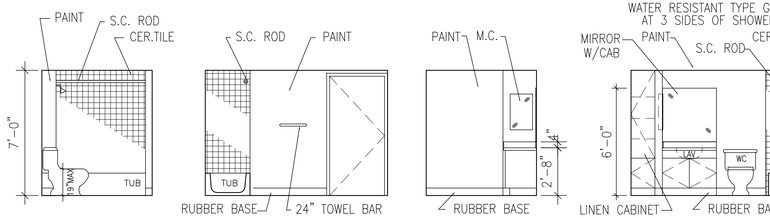

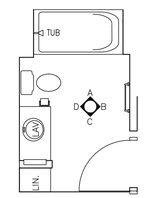

GROUND FLOOR UNIT PLAN-106 (SEE A2.0)

2ND FLOOR UNIT PLAN-206 (SEE A2.7)
LIKE UNITS SIMILAR FROM 3RD THRU 8TH FLOOR.

9TH FLOOR UNIT PLANS-906 (SEE A2.15)
LIKE UNITS SIMILAR 10TH THRU 46TH FLOOR

TYPE-6 BATH ELEVATIONS

SCALE: 1/4" = 1'-0"

PLAN

SCALE: 1/4" = 1'-0"

NOV 1, 2012

NO.	DATE	REVISIONS
.	.	.

KENJI TOSHI YATO
LICENSED PROFESSIONAL ARCHITECT
No. 3271
HAWAII, U.S.A.
Expiration Date: 4/30/2014

THIS PROJECT WAS PREPARED BY ME OR UNDER MY SUPERVISION AND CONSTRUCTION OF THIS PROJECT WILL BE UNDER MY SUPERVISION.

KAKAAKO WORKFORCE HOUSING PER SUBCHAPTER 4 OF 2011 MAUKA PLAN AND RULES

801 SOUTH STREET
HONOLULU, HAWAII

BATHROOM ELEVATIONS

KAZU YATO, AIA & ASSOCIATES, INC.
3015 ROOSEVELT STORAGE
HONOLULU HI 96822
TEL: (808) 945-0040
FAX: (808) 945-0041

DATE	DRAWN	CHECK	FILE
	AF	KY	

SHEET

A5.1

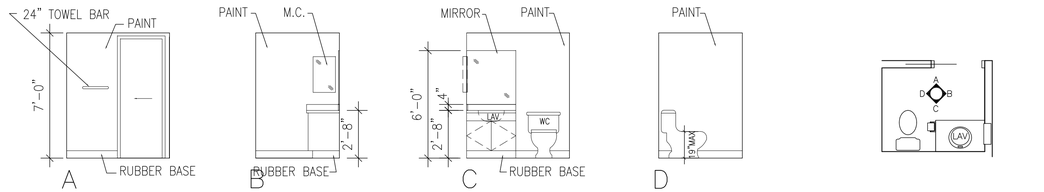

HALF BATH

TYPE–7 BATH ELEVATIONS

SCALE: 1/4" = 1'–0"

2ND FLOOR UNIT PLAN–207 (SEE A2.6)
LIKE UNITS SIMILAR FROM 3RD THRU 8TH FLOOR.

9TH FLOOR UNIT PLAN–907 (SEE A2.14)
LIKE UNITS SIMILAR 10TH THRU 46TH FLOOR

PLAN

SCALE: 1/4" = 1'–0"

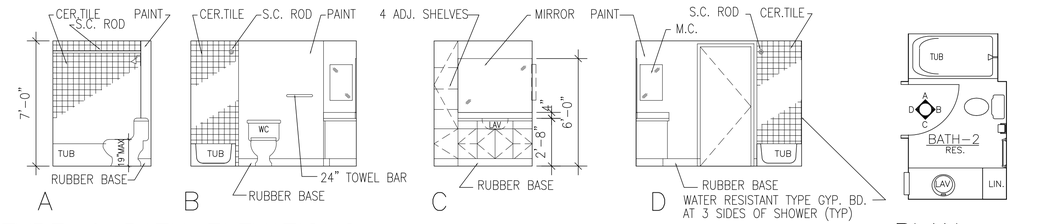

TYPE–9 BATH ELEVATIONS

SCALE: 1/4" = 1'–0"

GROUND FLOOR UNIT PLAN–110 BATH–2 (SEE A2.1)

PLAN

SCALE: 1/4" = 1'–0"

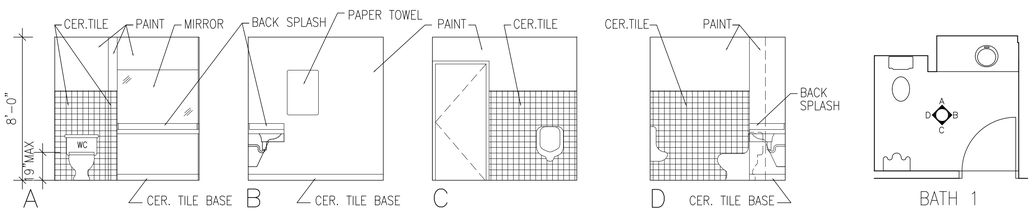

BATH–1 ELEVATIONS AT LOUNGE–1 (SEE A1.0)

SCALE: 1/4" = 1'–0"

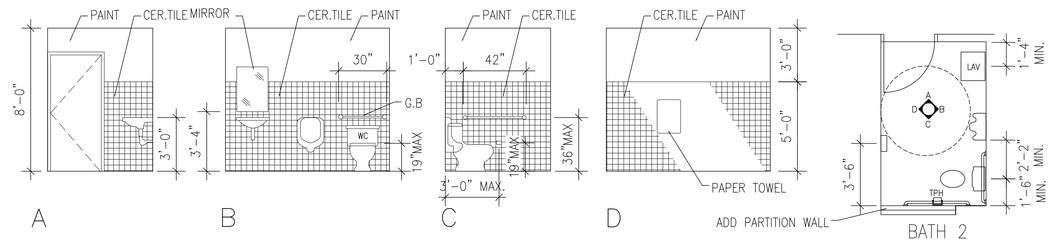

BATH–2 ELEVATIONS AT LOUNGE–2 (SEE A1.0)

SCALE: 1/4" = 1'–0"

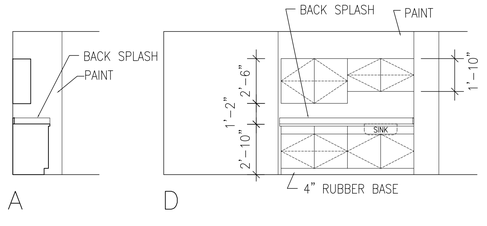

CABINET ELEVATIONS–LOUNGE 1

SCALE: 1/4" = 1'–0"

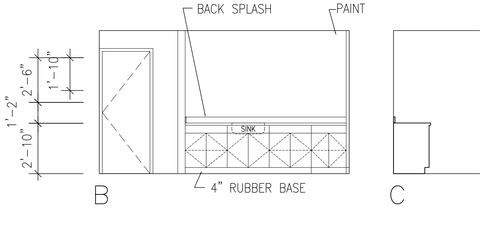

CABINET ELEVATIONS–LOUNGE 2

SCALE: 1/4" = 1'–0"

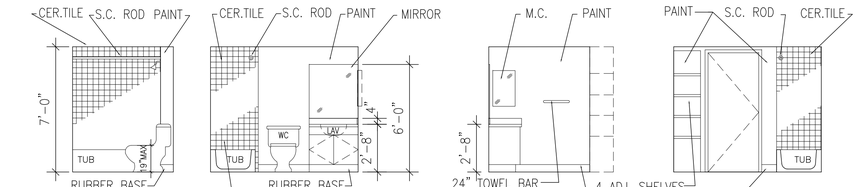

GROUND FLOOR UNIT PLAN–108 (SEE A2.0)

2ND FLOOR UNIT PLANS–208 (SEE A2.7)
LIKE UNITS SIMILAR FROM 3RD THRU 8TH FLOOR.

9TH FLOOR UNIT PLANS 908 (SEE A2.15)
LIKE UNITS SIMILAR 10TH THRU 46TH FLOOR

UNIT 08 – SHOWN

TYPE–8 BATH ELEVATIONS

SCALE: 1/4" = 1'–0"

GROUND FLOOR UNIT PLAN–110 BATH–1 (SEE A2.1)

2ND FLOOR UNIT PLANS–210 (SEE A2.9)
LIKE UNITS SIMILAR FROM 3RD THRU 8TH FLOOR

9TH FLOOR UNIT PLAN–910 (SEE A2.17)
LIKE UNITS SIMILAR 10TH THRU 46TH FLOOR

2ND FLOOR UNIT PLAN–207 (SEE A2.6)
LIKE UNITS SIMILAR FROM 3RD THRU 8TH FLOOR.

9TH FLOOR UNIT PLAN–907 (SEE A2.14)
LIKE UNITS SIMILAR 10TH THRU 46TH FLOOR

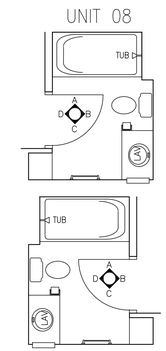

SCALE: 1/4" = 1'–0"

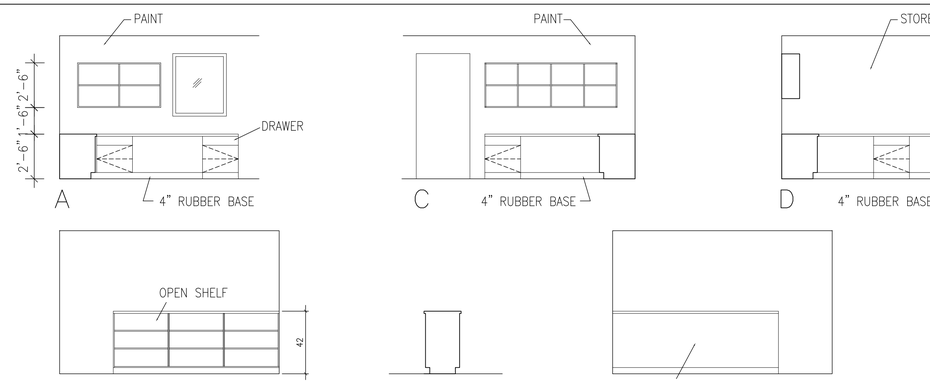

CABINET ELEVATIONS AT MANAGER

SCALE: 1/4" = 1'–0"

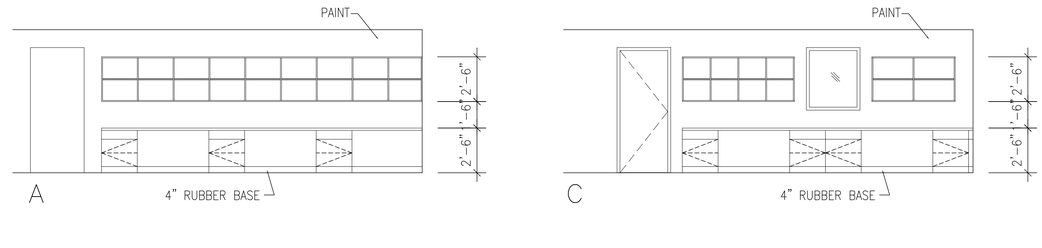

CABINET ELEVATIONS AT OFFICE

SCALE: 1/4" = 1'–0"

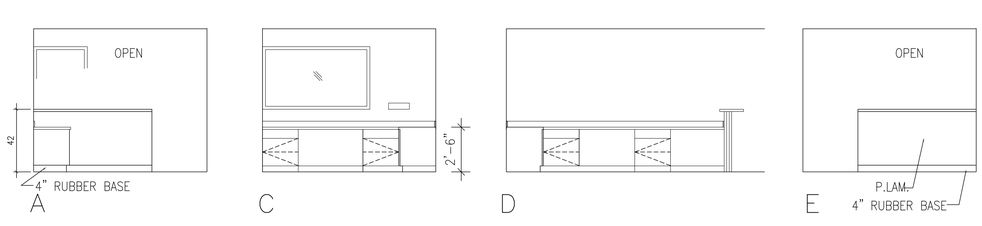

CABINET ELEVATIONS AT SECURITY

SCALE: 1/4" = 1'–0"

NOV.1, 2012

REVISIONS

NO.	DATE	
.	.	.

THIS PROJECT WAS PREPARED BY ME OR UNDER MY SUPERVISION AND CONSTRUCTION OF THIS PROJECT WILL BE UNDER MY SUPERVISION.

KAZUTOSHI YATO
LICENSED PROFESSIONAL ARCHITECT
No.3271
HAWAII, U.S.A.
Expiration Date: 4/30/2014

KAKAAKO WORKFORCE HOUSING PER
SUBCHAPTER 4 OF 2011 MAUKA PLAN AND RULES
801 SOUTH STREET
HONOLULU, HAWAII

BATHROOM & LOUNGE ELEVATIONS

KAZU YATO, AIA & ASSOCIATES,INC.
2013 ROOSEVELT TERRACE
HONOLULU, HI 96822
TEL: (808) 945-2045
FAX: (808) 945-2041

DATE	DRAWN	CHECK	FILE
	AF	KY	

SHEET

A5.2

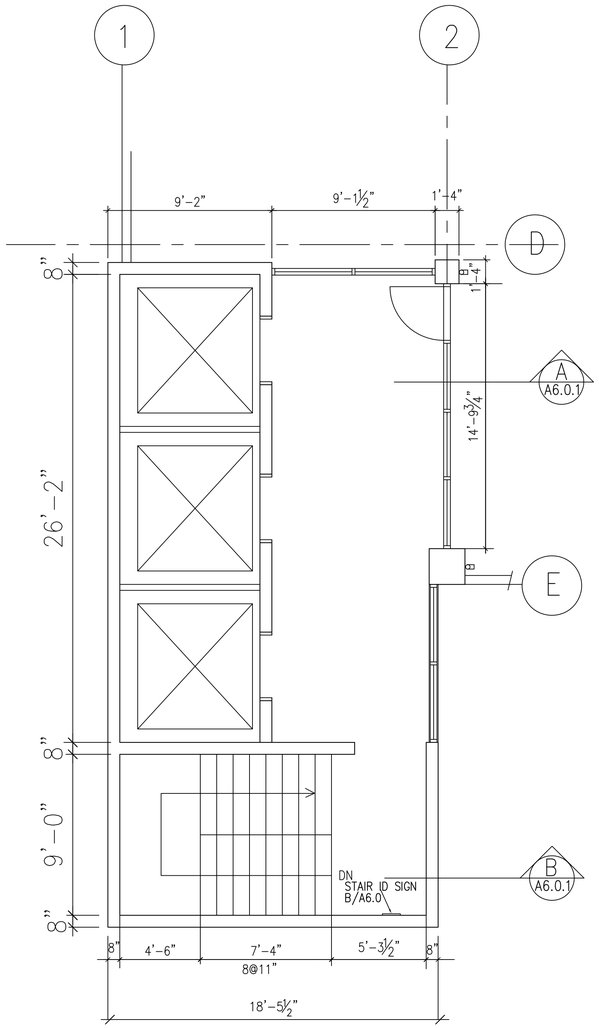

PLAN @ 11TH LEVEL

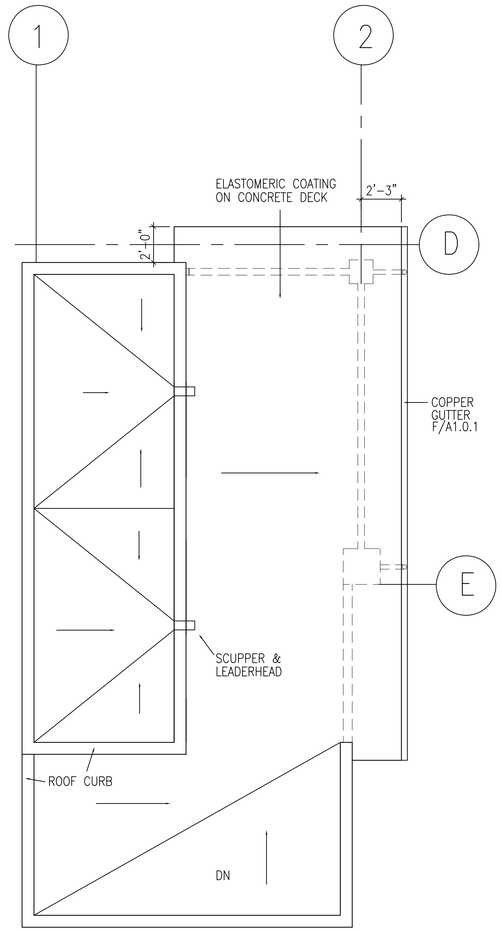

PLAN OF ROOF OVER ELEVATOR SHAFT

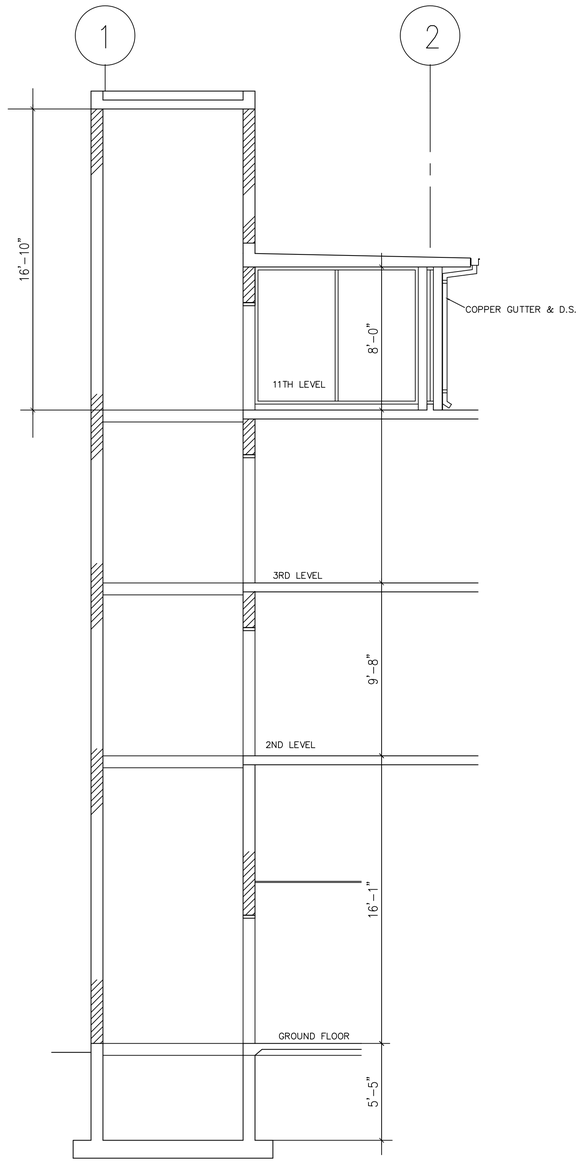

A A6.0.1 SECTION

SCALE: 1/4"=1'-0"

10/23/12

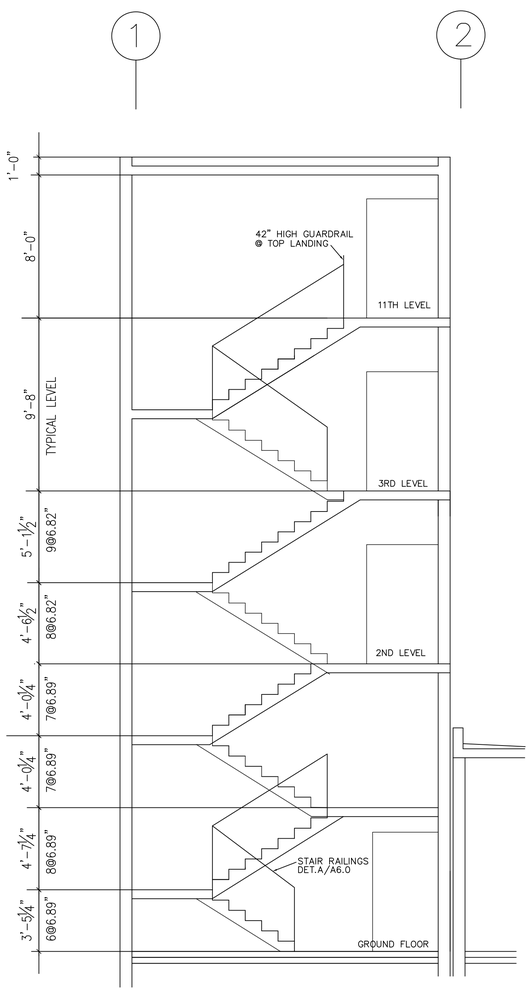

B A6.0.1 SECTION

SCALE: 1/4"=1'-0"

10/13/12

STAIR #3 AND ELEVATOR DETAILS

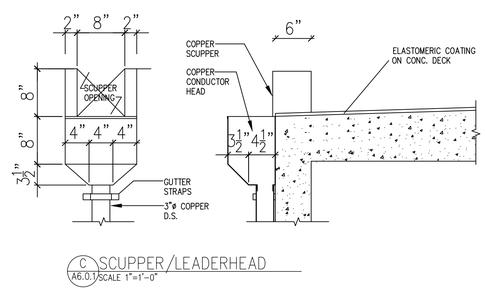

C A6.0.1 SCUPPER/LEADERHEAD

SCALE 1"=1'-0"

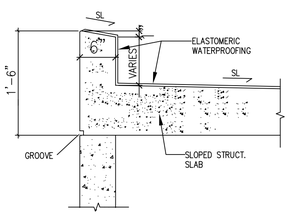

D A6.0.1 ROOF CURB

SCALE 1"=1'-0"

NO.	DATE	REVISIONS
.	.	.

KAZUTOSHI YATO
LICENSED PROFESSIONAL ARCHITECT
No.3271
HAWAII, U.S.A.

Expiration Date: 4/30/2014

THIS PROJECT WAS PREPARED BY ME OR UNDER MY SUPERVISION AND CONSTRUCTION OF THIS PROJECT WILL BE UNDER MY SUPERVISION.

KAKAAKO WORKFORCE HOUSING PER
SUBCHAPTER 4 OF 2011 MAUKA PLAN AND RULES

801 SOUTH STREET
HONOLULU, HAWAII

STAIR #3 AND ELEVATOR DETAILS

KAZU YATO, AIA & ASSOCIATES,INC.
2033 ROUNDTOP TERRACE
HONOLULU, HI 96822
TEL: (808) 945-0040
FAX: (808) 945-0041

DATE	DRAWN	CHECK	FILE
	KY	KY	

SHEET

A6.0.1

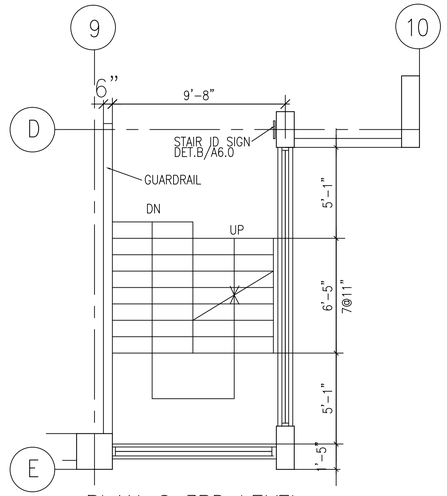

PLAN @ 3RD LEVEL

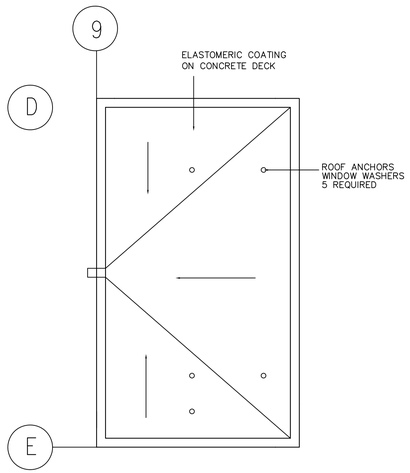

PLAN OF ROOF

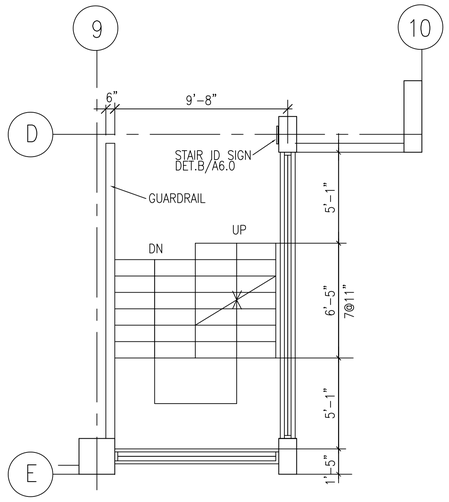

PLAN @ 2ND LEVEL

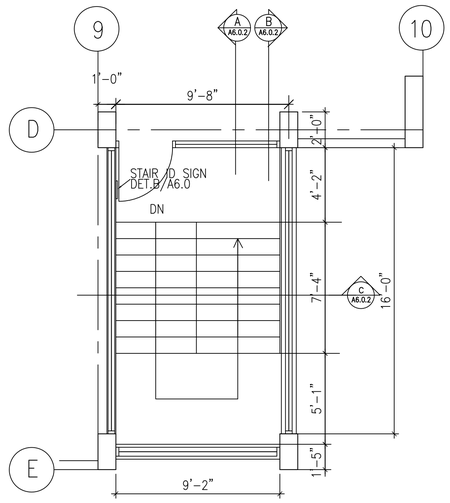

PLAN @ 11TH LEVEL

PLAN @ GROUND LEVEL

STAIR #4 DETAILS

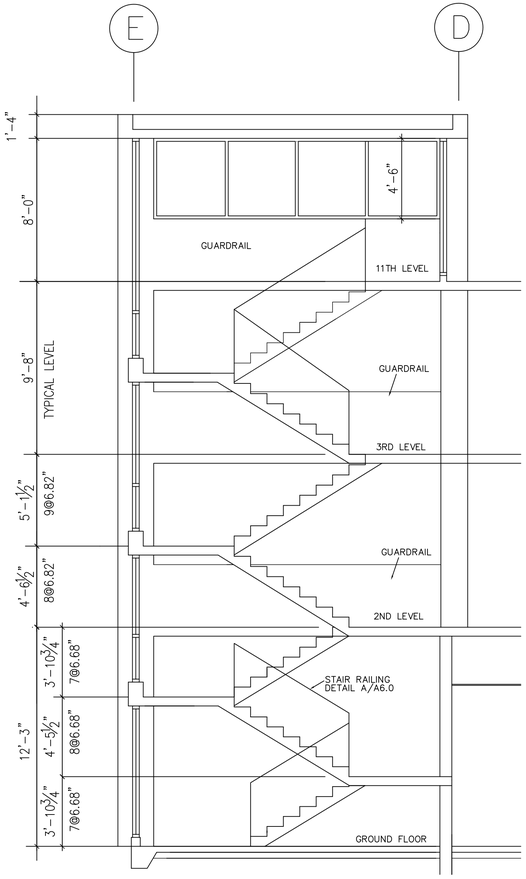

A A6.0.2 SECTION
SCALE: 1/4"=1'-0"

10/13/12

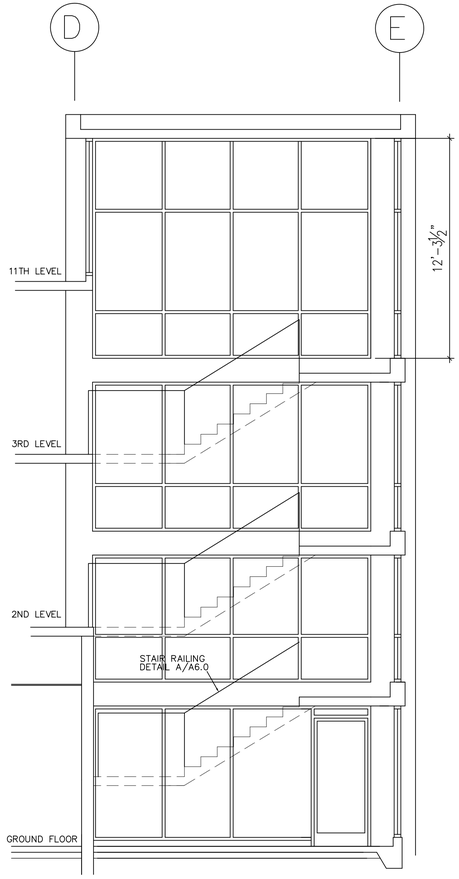

B A6.0.2 SECTION
SCALE: 1/4"=1'-0"

10/13/12

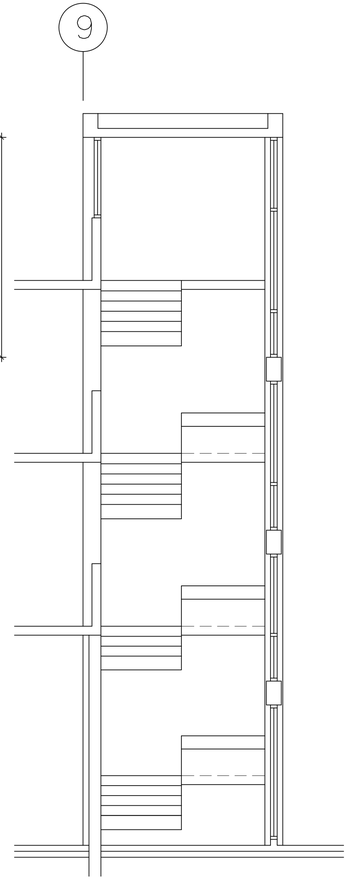

C A6.0.2 SECTION
SCALE: 1/4"=1'-0"

10/17/12

NO.	DATE	REVISIONS
.	.	.

KAZUTOSHI YATO
LICENSED PROFESSIONAL ARCHITECT
No.3271
HAWAII, U.S.A.
Expiration Date: 4/30/2014

THIS PROJECT WAS PREPARED BY ME OR UNDER MY SUPERVISION AND CONSTRUCTION OF THIS PROJECT WILL BE UNDER MY SUPERVISION.

KAKAAKO WORKFORCE HOUSING PER
SUBCHAPTER 4 OF 2011 MAUKA PLAN AND RULES

801 SOUTH STREET
HONOLULU, HAWAII

STAIR #4 DETAILS

KAZU YATO, AIA & ASSOCIATES, INC.
2033 ROOSTOP TERRACE
HONOLULU, HI 96822
TEL: (808) 945-0040
FAX: (808) 945-0041

DATE	DRAWN	CHECK	FILE
	KY	KY	

SHEET

A6.0.2

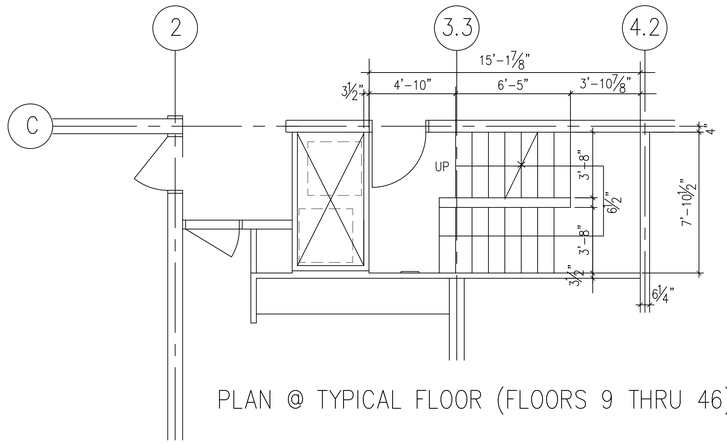

PLAN @ TYPICAL FLOOR (FLOORS 9 THRU 46)

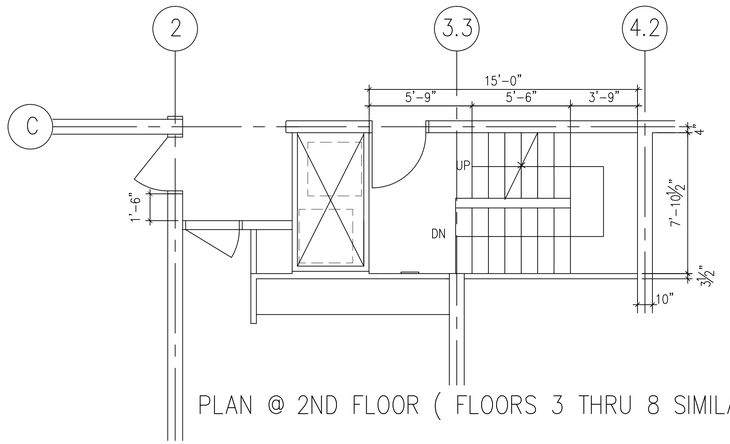

PLAN @ 2ND FLOOR (FLOORS 3 THRU 8 SIMILAR)

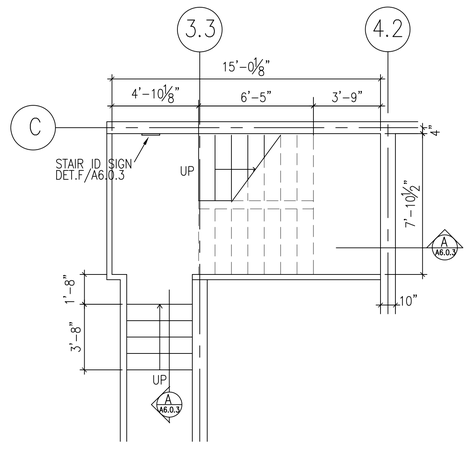

PLAN @ GROUND FLOOR

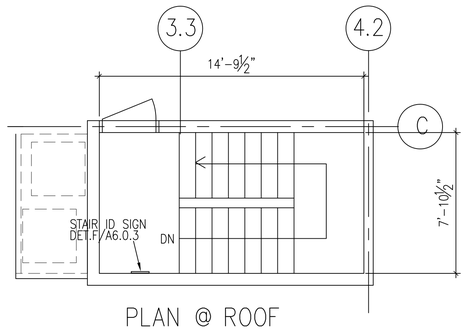

PLAN @ ROOF

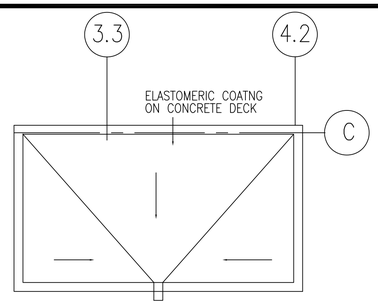

ROOF PLAN

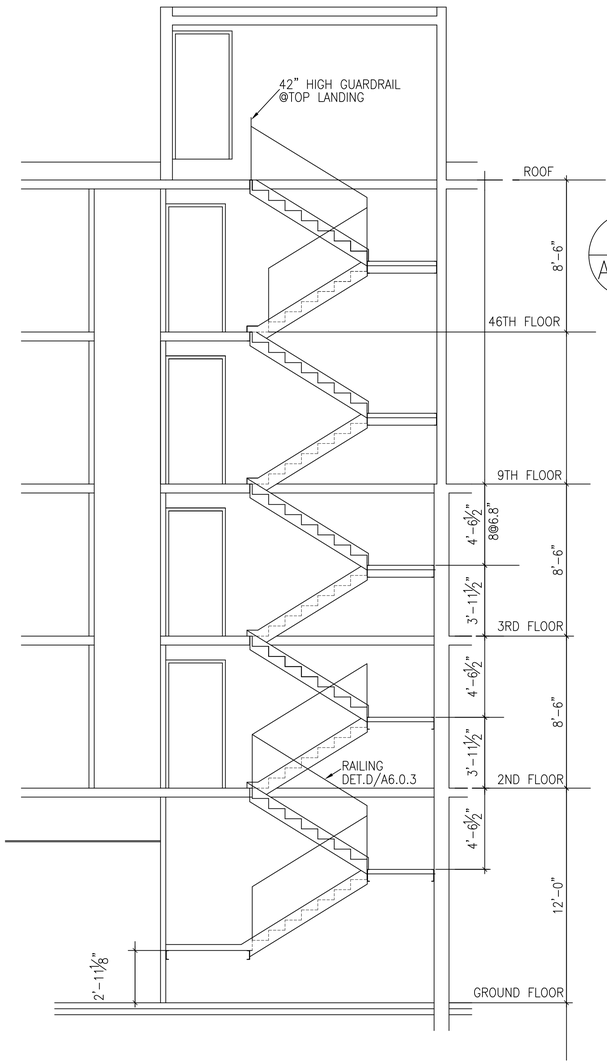

A A6.0.3 SECTION–STAIR 1
SCALE: 1/4"=1'-0"

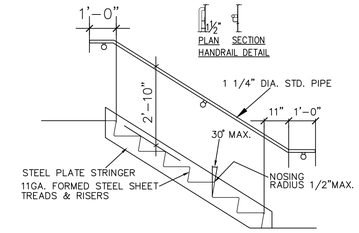

TYPICAL HANDRAIL

D A6.0.3 TYPICAL HANDRAIL AND RAILING DETAILS
SCALE: 1/2"=1'-0"

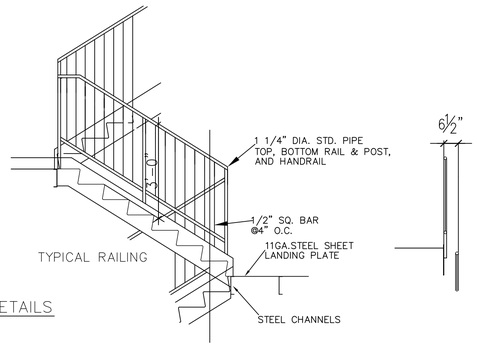

TYPICAL RAILING

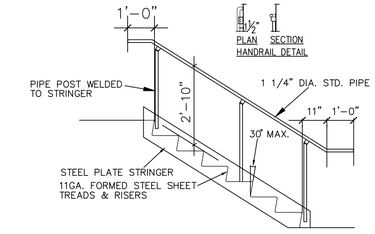

TYPICAL HANDRAIL

E A6.0.3 TYPICAL HANDRAIL
@ 2 HOUR SHAFT WALL SIDE
SCALE: 1/2"=1'-0"

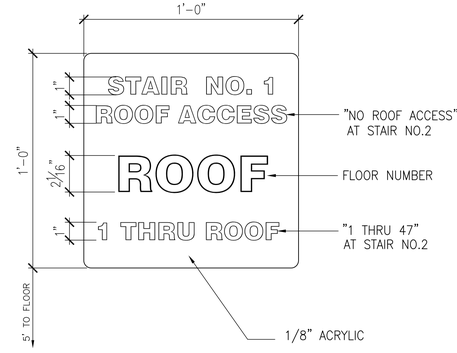

F A6.0.3 STAIR IDENTIFICATION SIGN

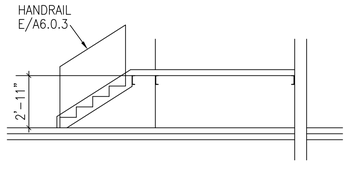

B A6.0.3 SECTION–STAIR 1
SCALE: 1/4"=1'-0"

C A6.0.3 CONDUCTOR HEAD & SCUPPER
SCALE : 1"=1'-0"

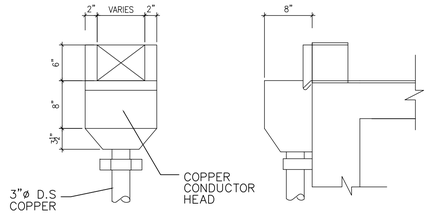

ELEVATION SECTION

STAIR #1 DETAILS

REVISIONS

NO.	DATE
.	.

KAZUTOSHI YATO
LICENSED PROFESSIONAL ARCHITECT
No.3271
HAWAII, U.S.A.
Expiration Date: 4/30/2014

THIS PROJECT WAS PREPARED BY ME OR UNDER MY SUPERVISION AND CONSTRUCTION OF THIS PROJECT WILL BE UNDER MY SUPERVISION.

KAKAAKO WORKFORCE HOUSING PER
SUBCHAPTER 4 OF 2011 MAUKA PLAN AND RULES

801 SOUTH STREET
HONOLULU, HAWAII

STAIR DETAILS

KAZU YATO, AIA & ASSOCIATES, INC.
2833 ROYNTOP TERRACE
HONOLULU, HI 96822
TEL: (808) 945-0040
FAX: (808) 945-0041

DATE	DRAWN	CHECK	FILE
	KY	KY	

SHEET

A6.0.3

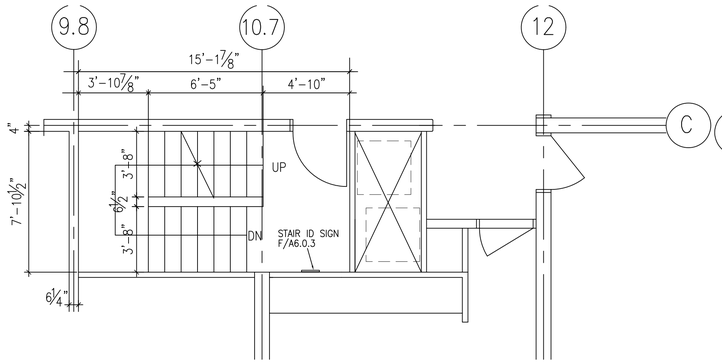

PLAN @ TYPICAL FLOOR (FLOORS 9 THRU 46)

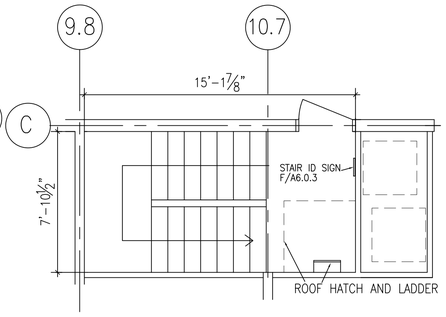

PLAN @ 46TH FLOOR

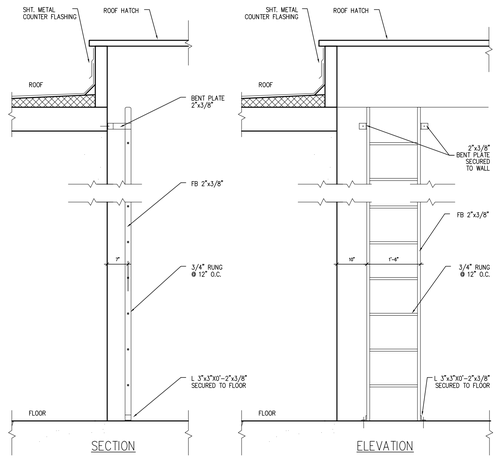

STEEL ROOF ACCESS LADDER

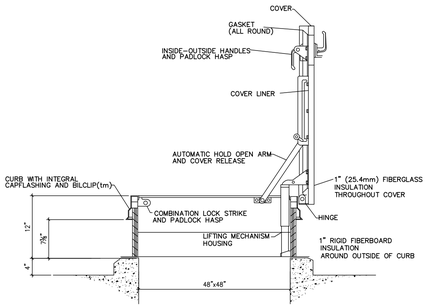

ROOF HATCH DETAIL

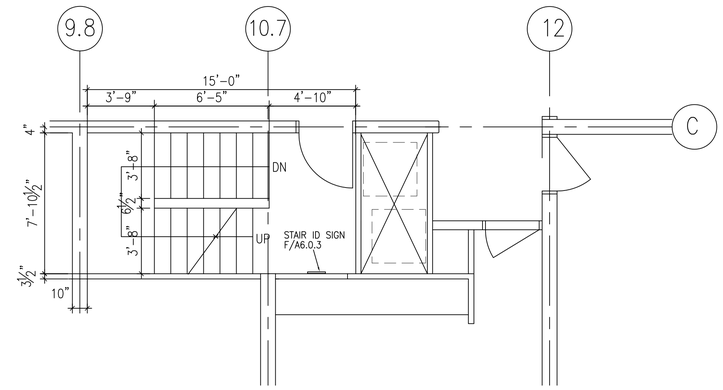

PLAN @ 2ND FLOOR (FLOORS 3 THRU 8 SIMILAR)

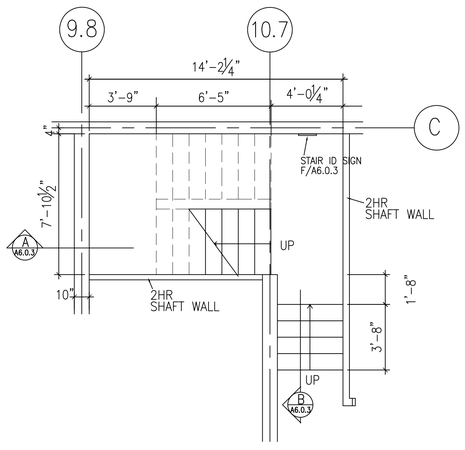

PLAN @ GROUND FLOOR

STAIR #2 DETAILS

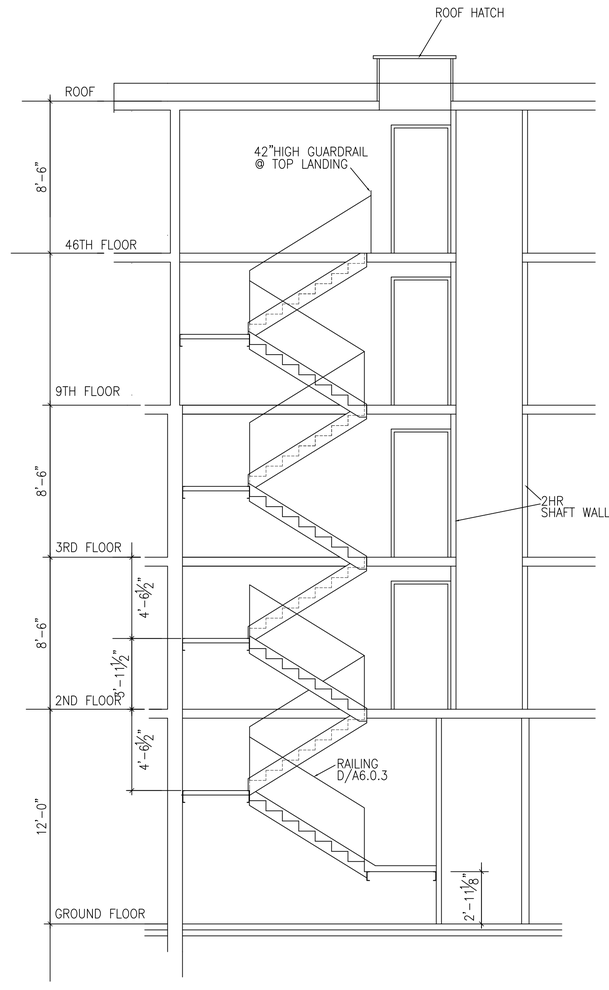

SECTION–STAIR 2 (A / A6.0.4)
SCALE: 1/4"=1'-0"

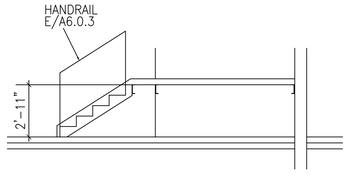

B A6.0.4 SECTION–STAIR 2
SCALE: 1/4"=1'-0"

REVISIONS

NO.	DATE
.	.

KAZUTOSHI YATO
LICENSED PROFESSIONAL ARCHITECT
No. 3271
HAWAII, U.S.A.
Expiration Date: 4/30/2014

THIS PROJECT WAS PREPARED BY ME OR UNDER MY SUPERVISION AND CONSTRUCTION OF THIS PROJECT WILL BE UNDER MY SUPERVISION.

KAKAAKO WORKFORCE HOUSING PER
SUBCHAPTER 4 OF 2011 MAUKA PLAN AND RULES

801 SOUTH STREET
HONOLULU, HAWAII

STAIR 2 DETAILS

KAZU YATO, AIA & ASSOCIATES, INC.
2033 ROUNDTOP TERRACE
HONOLULU, HI 96822
TEL: (808) 945-0040
FAX: (808) 945-0041

DATE	DRAWN	CHECK	FILE
	KY	KY	

SHEET

A6.0.4

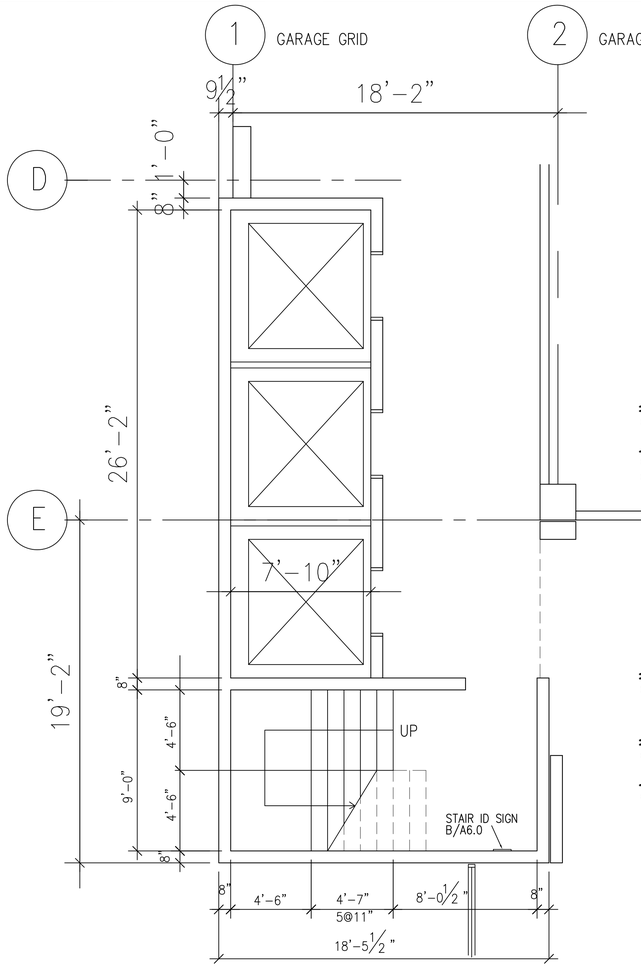

— PLAN @ GROUND FLOOR —

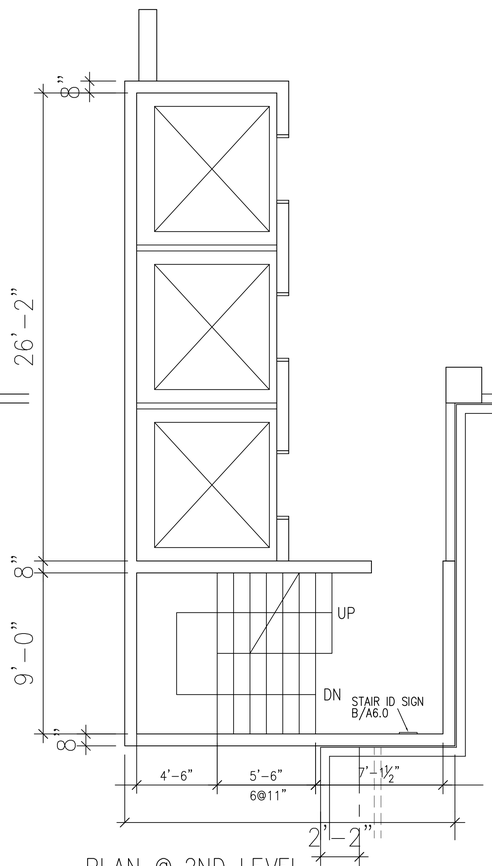

PLAN @ 2ND LEVEL

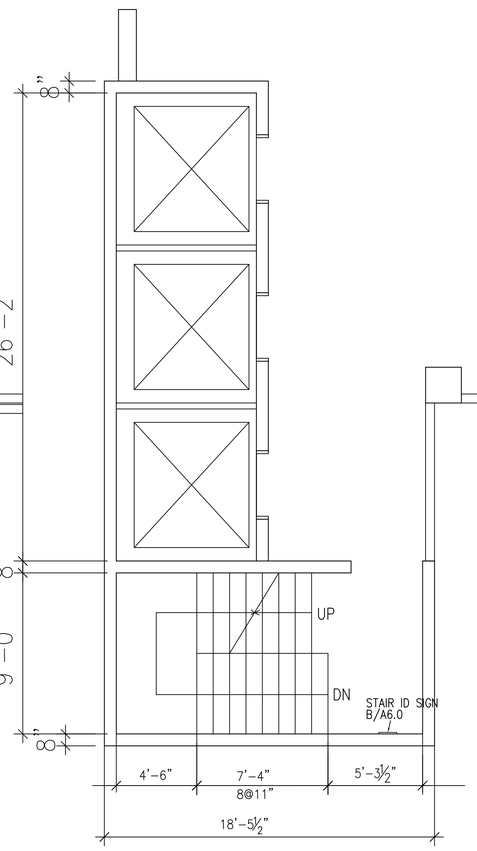

PLAN @ TYPICAL LEVEL

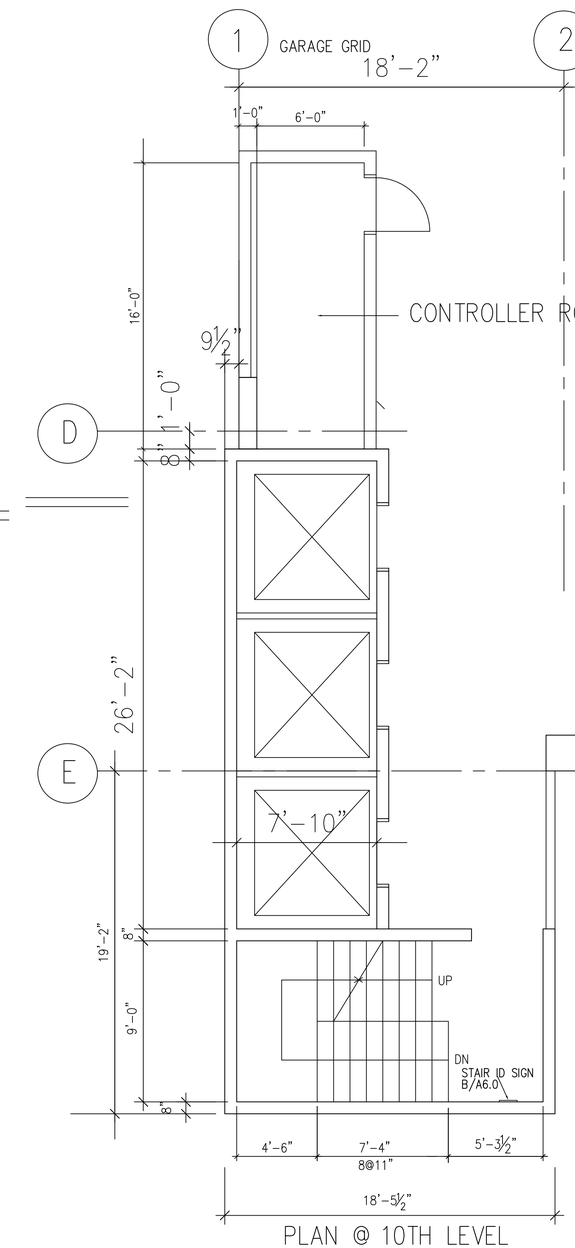

PLAN @ 10TH LEVEL

1 TOWER GRID

STAIR #3 AND ELEVATOR DETAILS

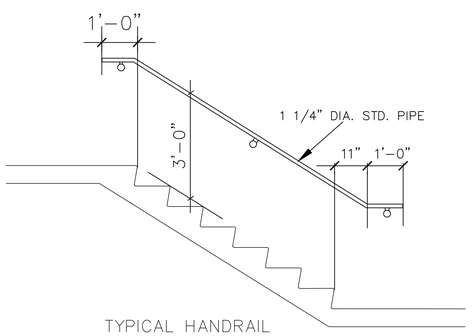

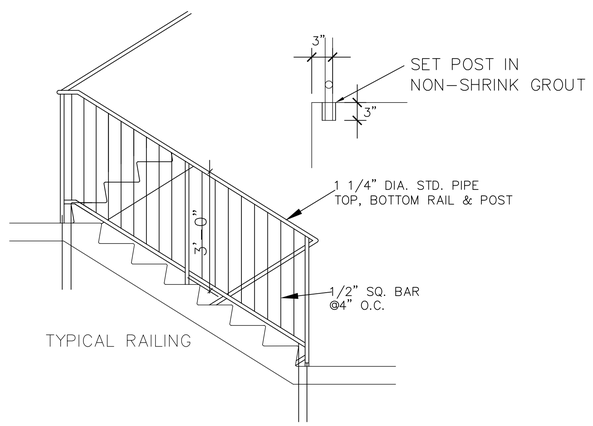

A / A6.0 TYPICAL HANDRAIL AND RAILING DETAILS

SCALE: 1/2"=1'-0"

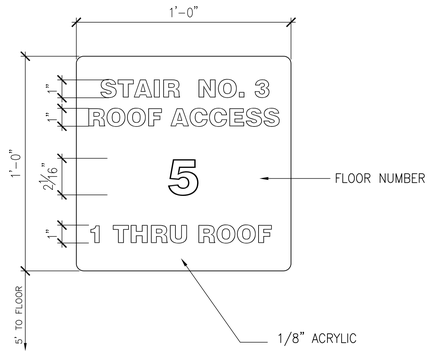

B / A6.0 STAIR IDENTIFICATION SIGN

REVISIONS

NO.	DATE
.	.

AZUTOSHI YATO
LICENSED PROFESSIONAL ARCHITECT
No. 3271
HAWAII, U.S.A.
Expiration Date: 4/30/2014

THIS PROJECT WAS PREPARED BY ME OR UNDER MY SUPERVISION AND CONSTRUCTION OF THIS PROJECT WILL BE UNDER MY SUPERVISION.

KAKAAKO WORKFORCE HOUSING PER SUBCHAPTER 4 OF 2011 MAUKA PLAN AND RULES

801 SOUTH STREET
HONOLULU, HAWAII

STAIR #3 AND ELEVATOR DETAILS

KAZU YATO, AIA & ASSOCIATES, INC.
2033 KOHAITOP TERRACE
HONOLULU, HI 96822
TEL: (808) 945-0040
FAX: (808) 945-0041

DATE	DRAWN	CHECK	FILE
	KY	KY	

SHEET

A6.0

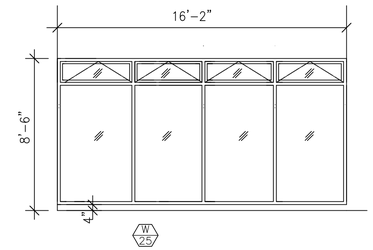

W 25

ALUM. FRAME STOREFRONT &
AWNING WINDOW
TINTED TEMPERED GLASS
CLEAR ANODIZED FRAME

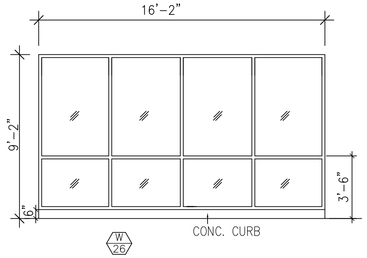

W 26

ALUM. FRAME STOREFRONT &
AWNING WINDOW
TINTED TEMPERED OBSCURE GLASS
CLEAR ANODIZED FRAME

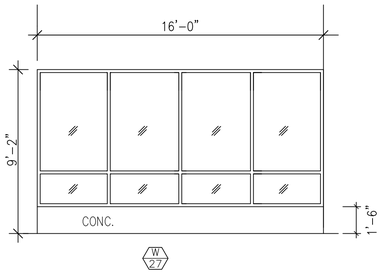

W 27

ALUM. FRAME STOREFRONT &
AWNING WINDOW
TINTED TEMPERED OBSCURE GLASS
CLEAR ANODIZED FRAME

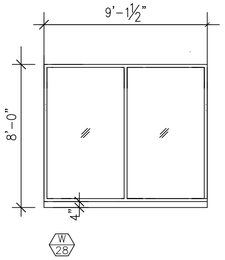

W 28

ALUM. FRAME STOREFRONT &
AWNING WINDOW
TINTED TEMPERED GLASS
CLEAR ANODIZED FRAME

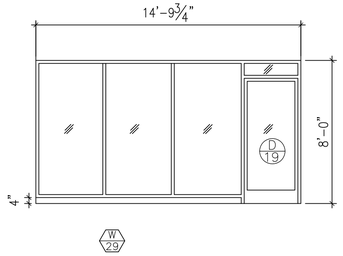

W 29

ALUM. FRAME STOREFRONT
TINTED TEMPERED GLASS
CLEAR ANODIZED FRAME

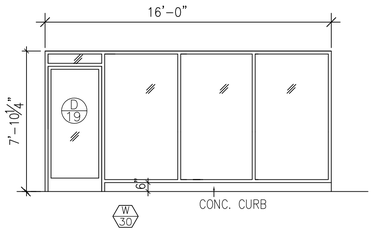

W 30

ALUM. FRAME STOREFRONT
TINTED TEMPERED OBSCURE GLASS
CLEAR ANODIZED FRAME

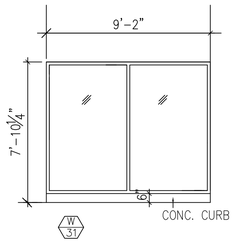

W 31

ALUM. FRAME STOREFRONT
TINTED TEMPERED OBSCURE GLASS
CLEAR ANODIZED FRAME

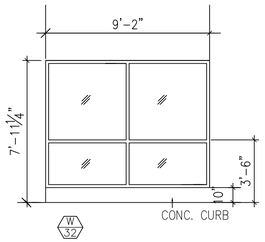

W 32

ALUM. FRAME STOREFRONT
TINTED TEMPERED OBSCURE GLASS
CLEAR ANODIZED FRAME

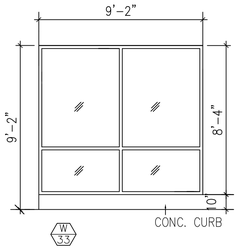

W 33

ALUM. FRAME STOREFRONT
TINTED TEMPERED OBSCURE GLASS
CLEAR ANODIZED FRAME

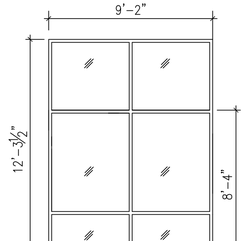

W 34

ALUM. FRAME STOREFRONT
TINTED TEMPERED OBSCURE GLASS
CLEAR ANODIZED FRAME

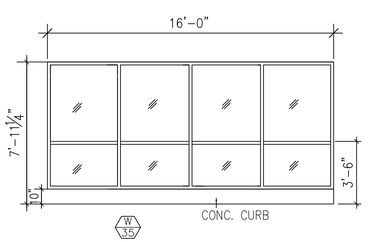

W 35

ALUM. FRAME STOREFRONT
TINTED TEMPERED OBSCURE GLASS
CLEAR ANODIZED FRAME

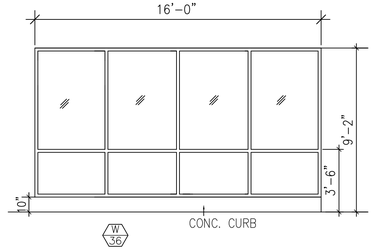

W 36

ALUM. FRAME STOREFRONT
TINTED TEMPERED OBSCURE GLASS
CLEAR ANODIZED FRAME

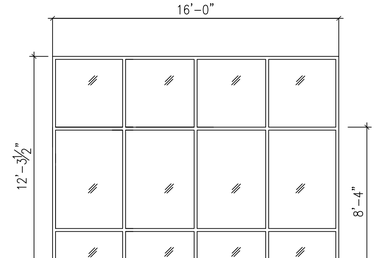

W 37

ALUM. FRAME STOREFRONT
TINTED TEMPERED OBSCURE GLASS
CLEAR ANODIZED FRAME

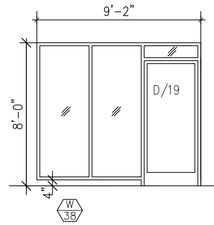

W 38

ALUM. FRAME STOREFRONT
TINTED TEMPERED GLASS
CLEAR ANODIZED FRAME

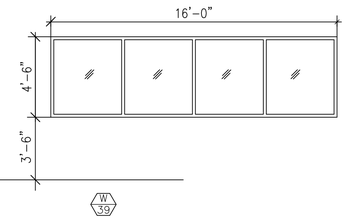

W 39

ALUM. FRAME FIXED GLASS
TINTED TEMPERED GLASS
CLEAR ANODIZED FRAME

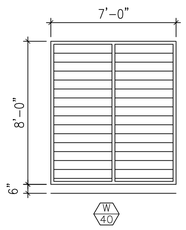

W 40

ALUM. ACOUTIC LOUVER
W/ BIRD SCREEN
CLEAR ANOD. ALUM.

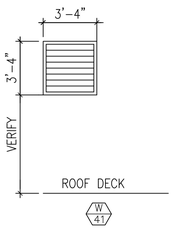

W 41

ALUM. LOUVER
W/ BIRD SCREEN
CLEAR ANOD. ALUM.

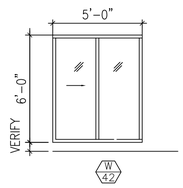

W 42

ALUM. FRAME SHOWER ENCLOSURE
W/ SLIDING PANEL
TEMPERED OBSCURE GLASS
CLEAR ANOD. ALUM.
VERIFY HANDS

WINDOW SCHEDULE

NO.	DATE	REVISIONS
.	.	.

THIS PROJECT WAS PREPARED BY ME OR UNDER MY SUPERVISION AND CONSTRUCTION OF THIS PROJECT WILL BE UNDER MY SUPERVISION.

KAZUTOSHI YATO
LICENSED PROFESSIONAL ARCHITECT
No. 3271
HAWAII, U.S.A.
Expiration Date: 4/30/2014

KAKAAKO WORKFORCE HOUSING PER
SUBCHAPTER 4 OF 2011 MAUKA PLAN AND RULES
801 SOUTH STREET
HONOLULU, HAWAII

DOOR AND WINDOW SCHEDULES

KAZU YATO, AIA & ASSOCIATES, INC.
2033 ROUNDTOP TERRACE
HONOLULU, HI 96822
TEL: (808) 945-0040
FAX: (808) 945-0041

DATE	DRAWN	CHECK	FILE
	KY	KY	

SHEET

A6.1.1

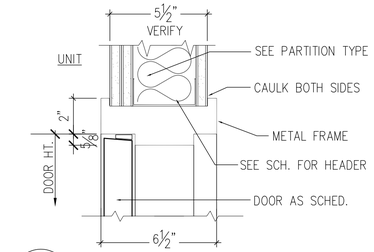

1 A6.1.1 DOOR HEAD–JAMB SIM.
SCALE 3"=1'–0"

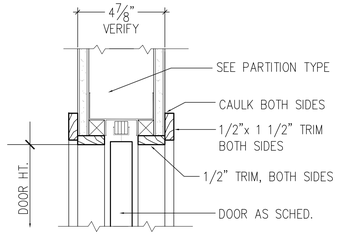

4 A6.1.1 POCKET DOOR–HEAD
SCALE 3"=1'–0"

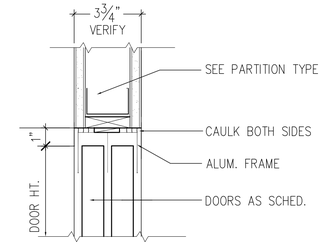

7 A6.1.1 DOOR HEAD–JAMB SIM.
SCALE 3"=1'–0"

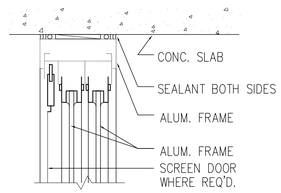

10 A6.1.1 DOOR HEAD
SCALE 3"=1'–0"

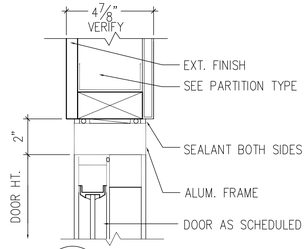

13 A6.1.1 DOOR HEAD
SCALE 3"=1'–0"

16 A6.1.1 SCALE 3"=1'–0"

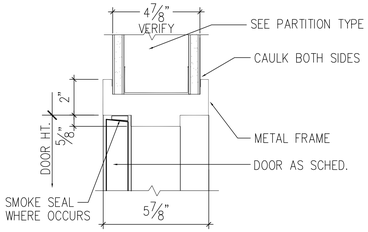

2 A6.1.1 DOOR HEAD–JAMB SIM.
SCALE 3"=1'–0"

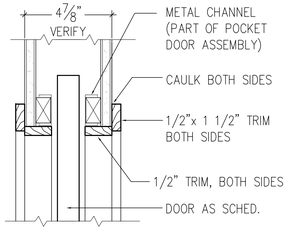

5 A6.1.1 POCKET DOOR–JAMB
SCALE 3"=1'–0"

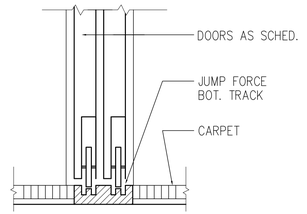

8 A6.1.1 DOOR TRESHOLD
SCALE 3"=1'–0"

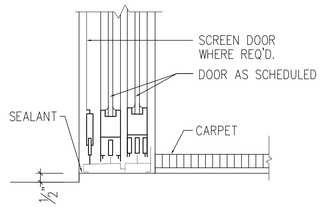

11 A6.1.1 DOOR TRESHOLD
SCALE 3"=1'–0"

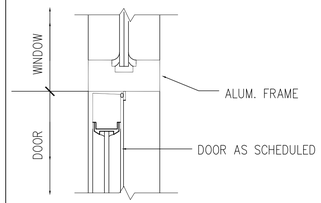

14 A6.1.1 DOOR JAMB
SCALE 3"=1'–0"

17 A6.1.1 SCALE 3"=1'–0"

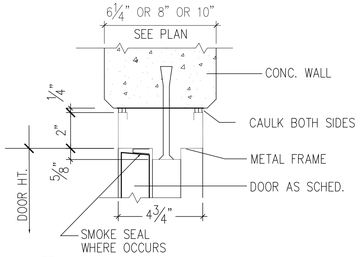

3 A6.1.1 DOOR HEAD–JAMB SIM.
SCALE 3"=1'–0"

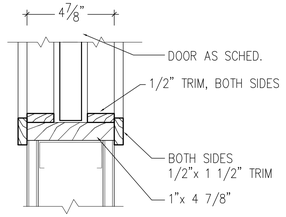

6 A6.1.1 STRIKE JAMB
SCALE 3"=1'–0"

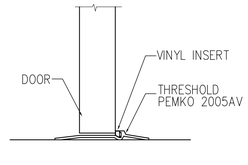

9 A6.1.1 DOOR THRESHOLD
SCALE 3"=1'–0"

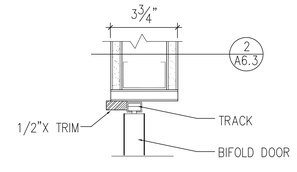

12 A6.1.1 DOOR HEAD
SCALE 3"=1'–0"

15 A6.1.1 SCALE 3"=1'–0"

18 A6.1.1 SCALE 3"=1'–0"

OCT. 23, 2012

REVISIONS

NO.	DATE
.	.

KAZUTOSHI YATO
LICENSED PROFESSIONAL ARCHITECT
No. 3271
HAWAII, U.S.A.
Expiration Date: 4/30/2014

THIS PROJECT WAS PREPARED BY ME OR UNDER MY SUPERVISION AND CONSTRUCTION OF THIS PROJECT WILL BE UNDER MY SUPERVISION.

KAKAAKO WORKFORCE HOUSING PER
SUBCHAPTER 4 OF 2011 MAUKA PLAN AND RULES

801 SOUTH STREET
HONOLULU, HAWAII

DOOR AND WINDOW DETAILS

KAZU YATO, AIA & ASSOCIATES,INC.
2233 ROUNDTOP TERRACE
HONOLULU, HI 96822
TEL: (808) 945-0040
FAX: (808) 945-0041

DATE	DRAWN	CHECK	FILE
	AF	KY	

SHEET

A6.1.2

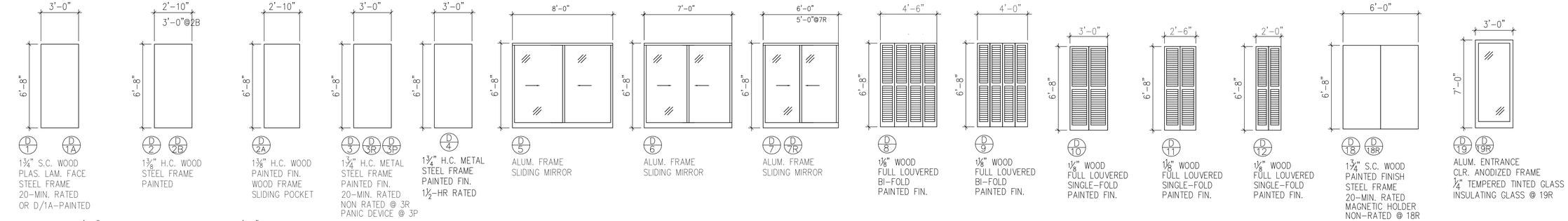

DOOR SCHEDULE

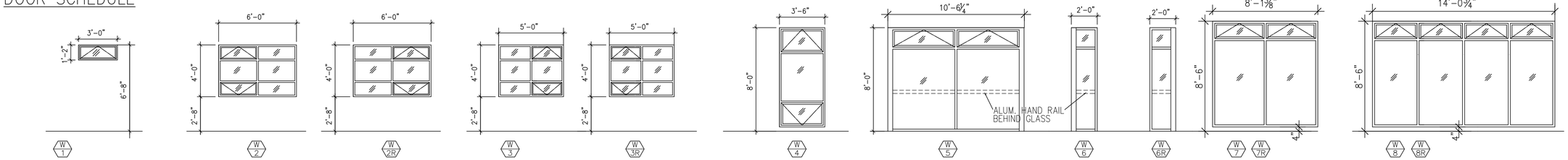

WINDOW SCHEDULE

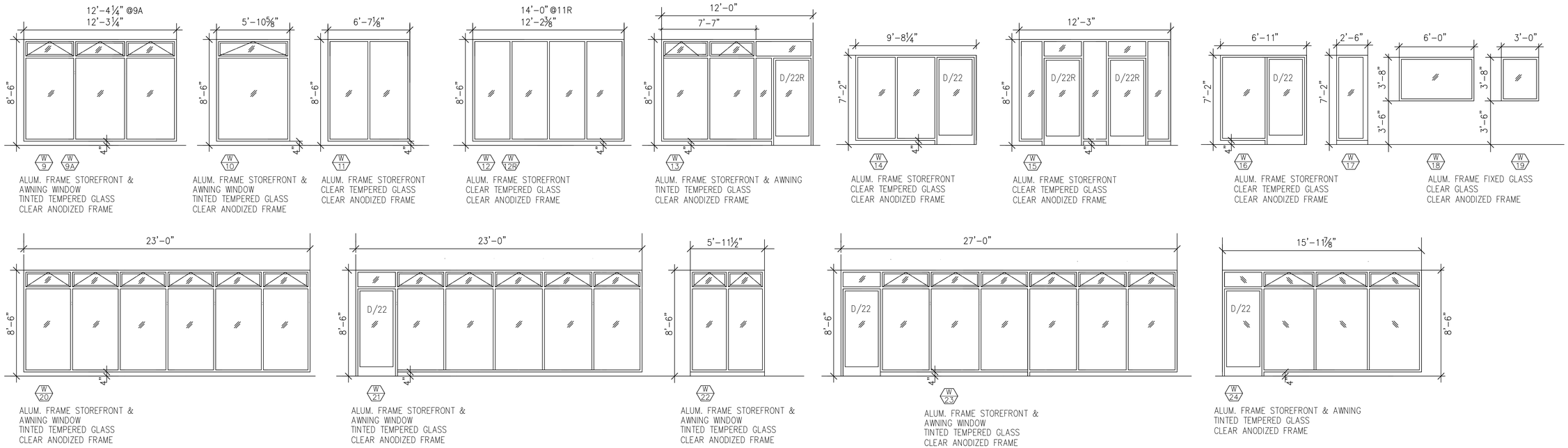

NO.	DATE	REVISIONS
.	.	.

KAZUTOSHI YATO
LICENSED PROFESSIONAL ARCHITECT
No.3271
HAWAII, U.S.A.
Expiration Date: 4/30/2014

THIS PROJECT WAS PREPARED BY ME OR UNDER MY SUPERVISION AND CONSTRUCTION OF THIS PROJECT WILL BE UNDER MY SUPERVISION.

KAKAAKO WORKFORCE HOUSING PER
SUBCHAPTER 4 OF 2011 MAUKA PLAN AND RULES
801 SOUTH STREET
HONOLULU, HAWAII

DOOR AND WINDOW SCHEDULES

KAZU YATO, AIA & ASSOCIATES,INC.
2031 ROUNTOP TERRACE
HONOLULU, HI 96822
TEL: (808) 945-0040
FAX: (808) 945-0041

DATE	DRAWN	CHECK	FILE
	AF	KY	

SHEET

A6.1

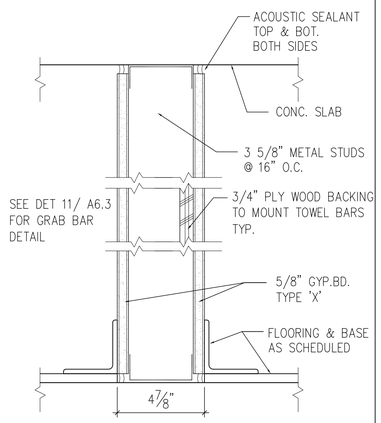

1 A6.2 WALL DETAIL
SCALE 3"=1'-0"

FIRERATING: ONE HR
UL DESIGN: #U465

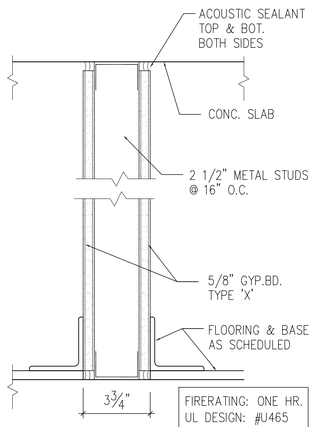

FIRERATING: ONE HR.
UL DESIGN: #U465

2 A6.2 WALL DETAIL
SCALE 3"=1'-0"

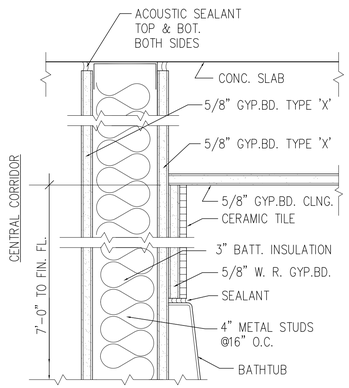

3 A6.2 WALL DETAIL
SCALE 3"=1'-0"

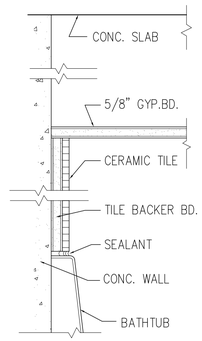

3A A6.2 WALL DETAIL
SCALE 3"=1'-0"

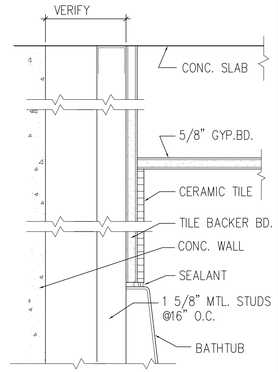

3B A6.2 WALL DETAIL
SCALE 3"=1'-0"

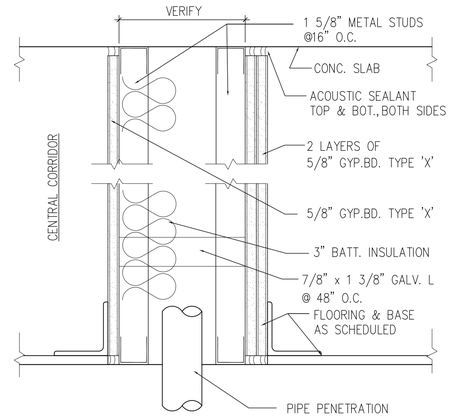

4 A6.2 WALL DETAIL
SCALE 3"=1'-0"

FIRERATING: 1 HR.
UL DESIGN: #U420

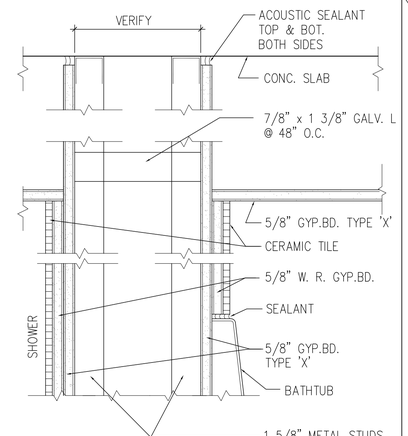

5 A6.2 WALL DETAIL
SCALE 3"=1'-0"

FIRERATING: ONE HR
UL DESIGN: #U493

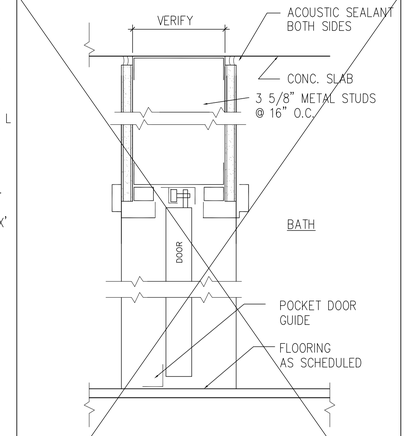

6 A6.2 SLIDING DOOR DETAIL
N.T.S.

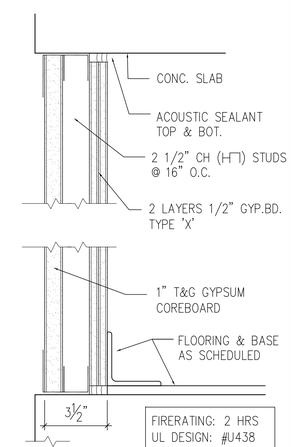

FIRERATING: 2 HRS
UL DESIGN: #U438
STC 40-42

7 A6.2 WALL DETAIL
SCALE 3"=1'-0"

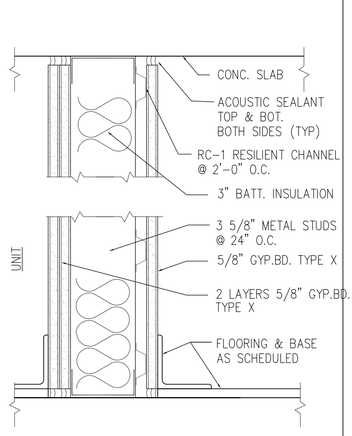

8 A6.2 WALL DETAIL
SCALE 3"=1'-0"

FIRERATING: ONE HR.
UL DESIGN: #U451

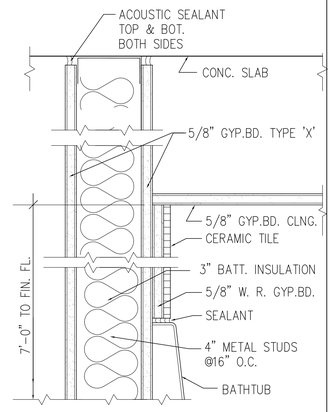

9 A6.2 WALL DETAIL
SCALE 3"=1'-0"

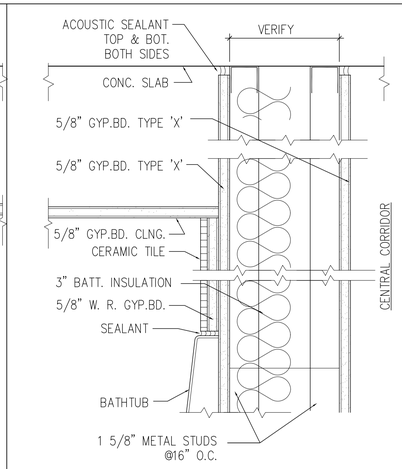

9A A6.2 WALL DETAIL
SCALE 3"=1'-0"

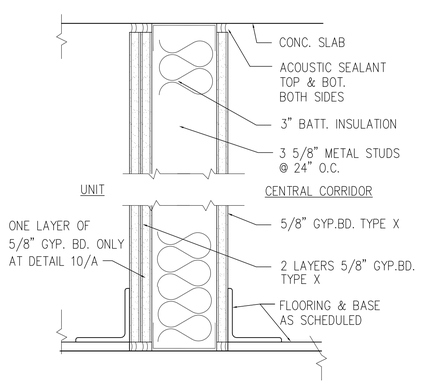

10 A6.2 WALL DETAIL
SCALE 3"=1'-0"

FIRERATING: 1 HR.
UL DESIGN: #U465

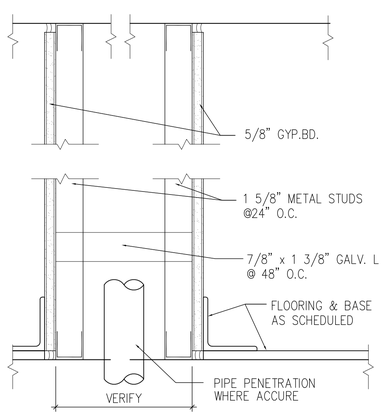

11 A6.2 WALL DETAIL
SCALE 3"=1'-0"

FIRERATING: 1 HR.
UL DESIGN: #U420

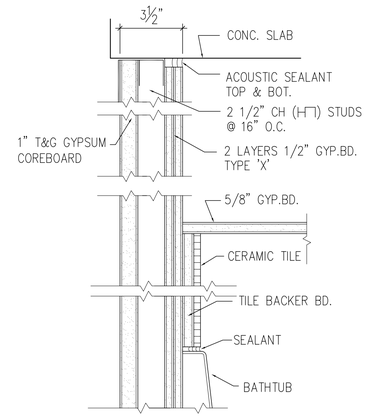

12 A6.2 WALL DETAIL
SCALE 3"=1'-0"

FIRERATING: 2 HRS
UL DESIGN: #U438
STC 40-42

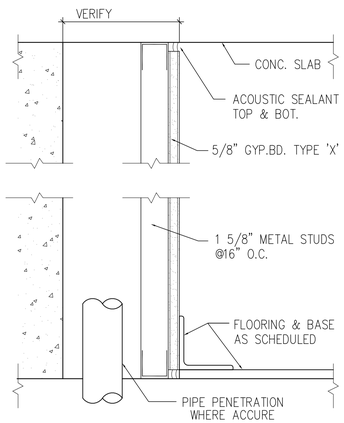

13 A6.2 WALL DETAIL
SCALE 3"=1'-0"

FIRERATING: ONE HR.
UL DESIGN: #U420

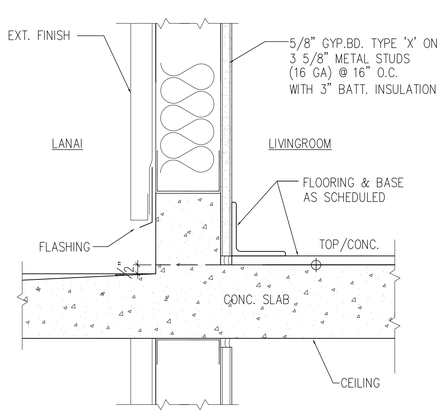

14 A6.2 WALL DETAIL
SCALE 3"=1'-0"

FIRERATING: ONE HR
DESIGN: #WP 8005

OCT. 19, 2012

NO.	DATE	REVISIONS
.	.	.

KATUTOSHI YATO
LICENSED PROFESSIONAL ARCHITECT
No.3271
HAWAII, U.S.A.
Expiration Date: 4/30/2014

THIS PROJECT WAS PREPARED BY ME OR UNDER MY SUPERVISION AND CONSTRUCTION OF THIS PROJECT WILL BE UNDER MY SUPERVISION.

KAKAAKO WORKFORCE HOUSING PER
SUBCHAPTER 4 OF 2011 MAUKA PLAN AND RULES
801 SOUTH STREET
HONOLULU, HAWAII

WALL AND PARTITION TYPES

KAZU YATO, AIA & ASSOCIATES, INC.
2033 SOUNDVIEW TERRACE
HONOLULU, HI 96822
TEL: (808) 945-2043
FAX: (808) 935-0052

DATE	DRAWN	CHECK	FILE
	AF	KY	

SHEET

A-6.2

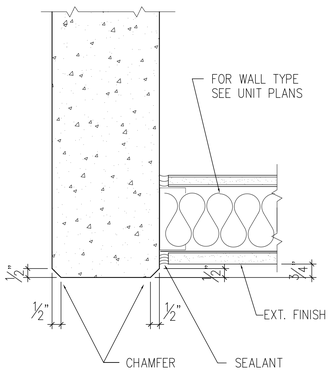

1 A6.3 EXT. WALL DETAIL
SCALE 3"=1'-0"

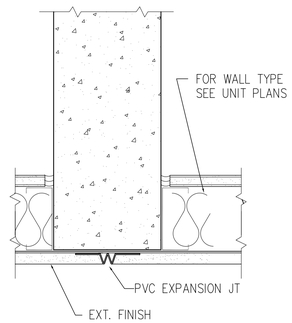

2 A6.3 EXT. WALL DETAIL
SCALE 3"=1'-0"

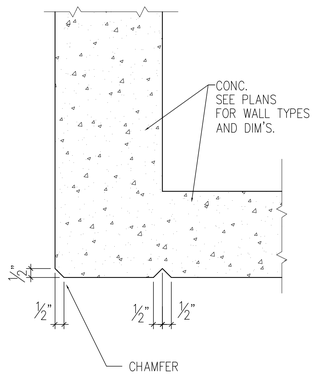

3 A6.3 EXT. WALL DETAIL
SCALE 3"=1'-0"

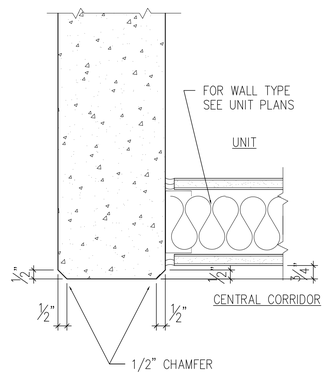

4 A6.3 INT. WALL DETAIL
SCALE 3"=1'-0"

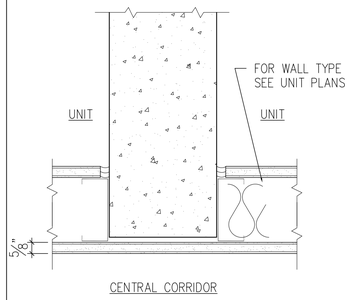

5 A6.3 INT. WALL DETAIL
SCALE 3"=1'-0"

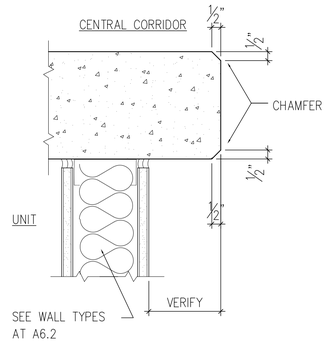

6 A6.3 INT. WALL DETAIL
SCALE 3"=1'-0"

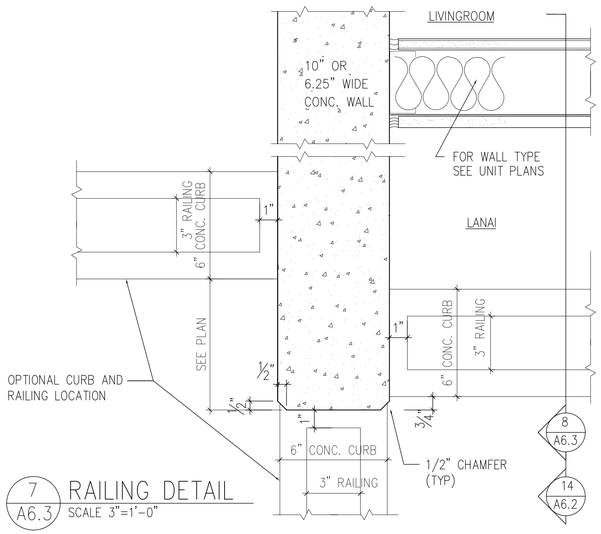

7 A6.3 RAILING DETAIL
SCALE 3"=1'-0"

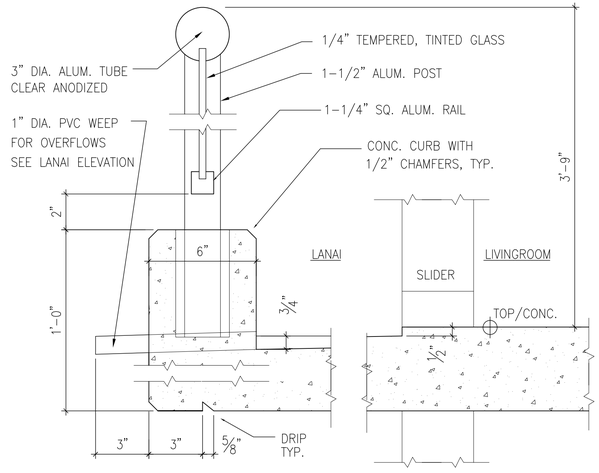

8 A6.3 RAILING SECTION
SCALE 3"=1'-0"

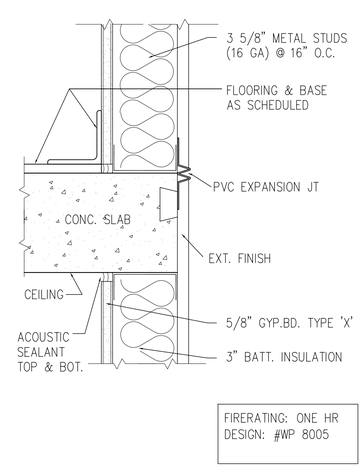

FIRERATING: ONE HR
DESIGN: #WP 8005

9 A6.3 WALL DETAIL
SCALE 3"=1'-0"

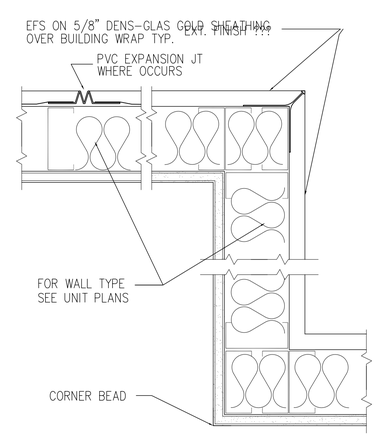

10 A6.3 EXT. WALL DETAIL
SCALE 3"=1'-0"

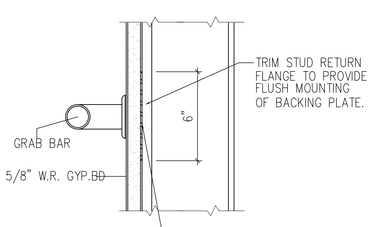

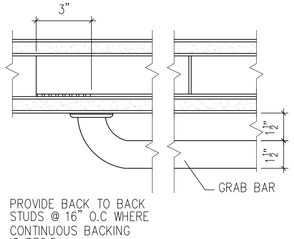

THE STRUCTURAL STRENGTH OF GRAB BARS, FASTENERS AND MOUNTING DEVICES SHALL MEET THE REQUIREMENTS AS SPECIFIED IN "ADAAG 4.26.3"

11 A6.3 GRAB BAR ANCHOR DEATAIL
N.T.S.

OCT. 19, 2012

NO.	DATE	REVISIONS
.	.	.

KAZUTOSHI YATO
LICENSED PROFESSIONAL ARCHITECT
No.5271
HAWAII, U.S.A.
Expiration Date: 4/30/2014

THIS PROJECT WAS PREPARED BY ME OR UNDER MY SUPERVISION AND CONSTRUCTION OF THIS PROJECT WILL BE UNDER MY SUPERVISION.

KAKAAKO WORKFORCE HOUSING PER
SUBCHAPTER 4 OF 2011 MAUKA PLAN AND RULES

801 SOUTH STREET
HONOLULU, HAWAII

WALL AND PARTITION DETAILS

KAZU YATO, AIA & ASSOCIATES, INC.
3053 ROOSEVELT TERRACE
HONOLULU, HI 96822
TEL: (808) 945-0040
FAX: (808) 955-0052

DATE	DRAWN	CHECK	FILE
	AF	KY	

SHEET

A-6.3

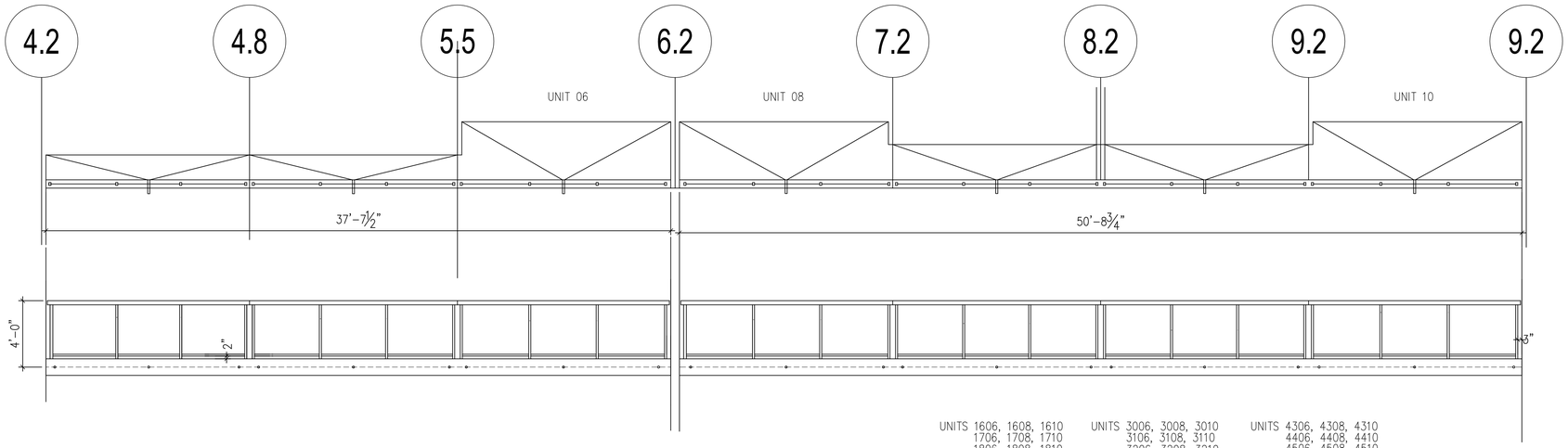

UNITS 1606, 1608, 1610
1706, 1708, 1710
1806, 1808, 1810
1906, 1908, 1910

UNITS 3006, 3008, 3010
3106, 3108, 3110
3206, 3208, 3210
3306, 3308, 3310

UNITS 4306, 4308, 4310
4406, 4408, 4410
4506, 4508, 4510
4606, 4608, 4610

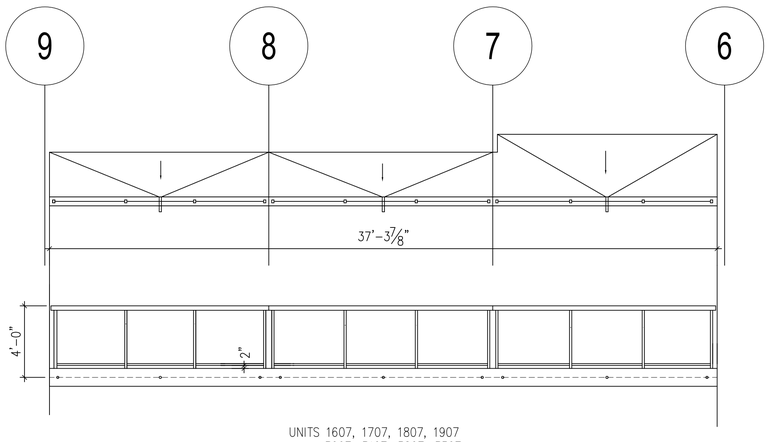

UNITS 1607, 1707, 1807, 1907
3007, 3107, 3207, 3307
4307, 4407, 4507, 4607

LANAI RAILING DETAILS

NO.	DATE	REVISIONS
.	.	.

KAZUTOSHI YATO
LICENSED PROFESSIONAL ARCHITECT
No.3271
HAWAII, U.S.A.
Expiration Date: 4/30/2014

THIS PROJECT WAS PREPARED BY ME OR UNDER MY SUPERVISION AND CONSTRUCTION OF THIS PROJECT WILL BE UNDER MY SUPERVISION.

KAKAAKO WORKFORCE HOUSING PER
SUBCHAPTER 4 OF 2011 MAUKA PLAN AND RULES

801 SOUTH STREET
HONOLULU, HAWAII

LANAI RAILING DETAILS

KAZU YATO, AIA & ASSOCIATES,INC.
2033 ROUNDTOP TERRACE
HONOLULU, HI 96822
TEL: (808) 945-0040
FAX: (808) 945-0041

DATE	DRAWN	CHECK	FILE
	KY	KY	

SHEET

A6.4.1

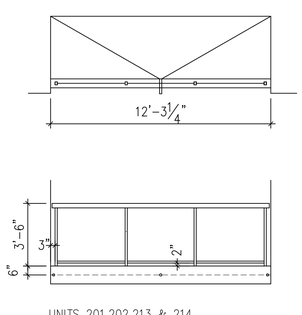

UNITS 201,202,213 & 214
THRU 801,802,813 & 814

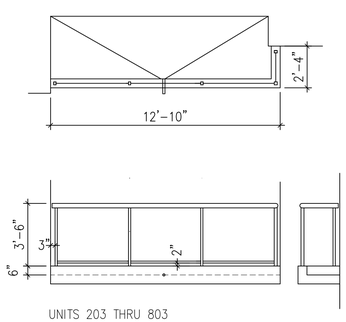

UNITS 203 THRU 803

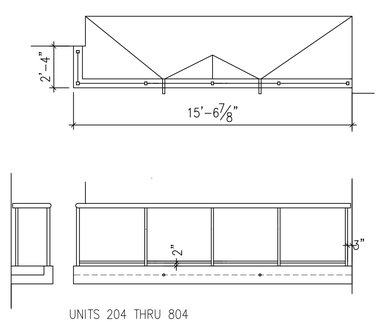

UNITS 204 THRU 804

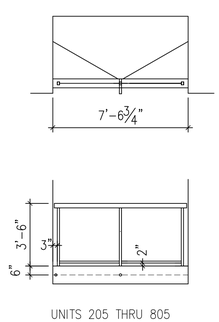

UNITS 205 THRU 805
UNITS 209 THRU 809 SIM.

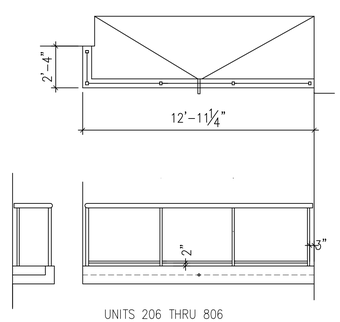

UNITS 206 THRU 806

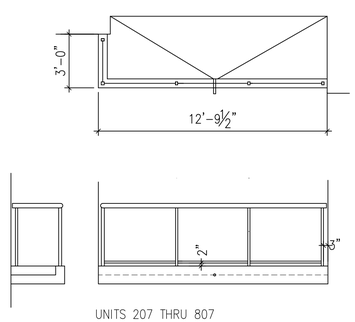

UNITS 207 THRU 807

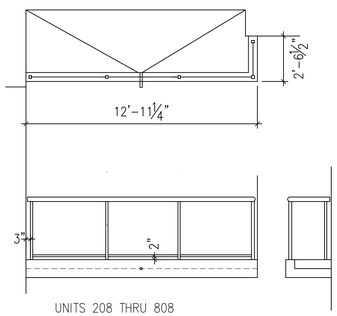

UNITS 208 THRU 808

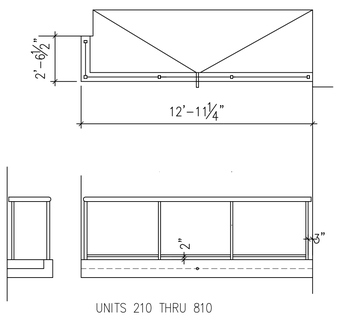

UNITS 210 THRU 810

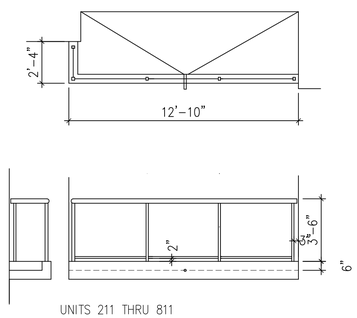

UNITS 211 THRU 811

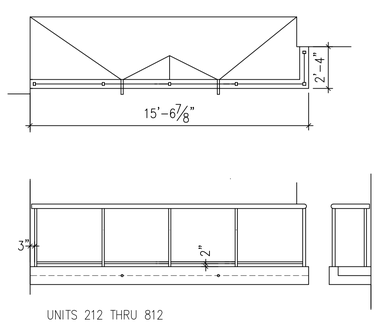

UNITS 212 THRU 812

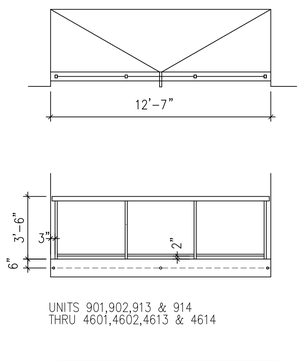

UNITS 901,902,913 & 914
THRU 4601,4602,4613 & 4614

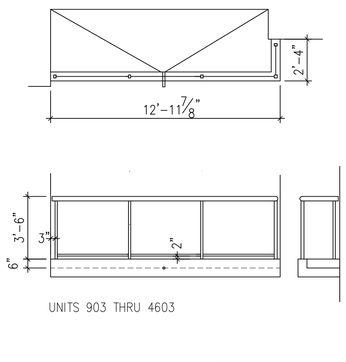

UNITS 903 THRU 4603

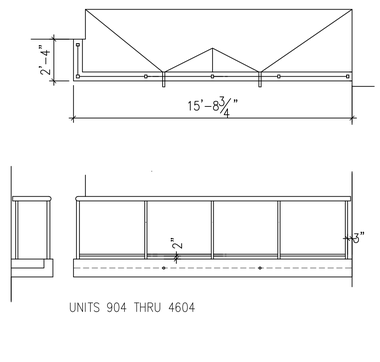

UNITS 904 THRU 4604

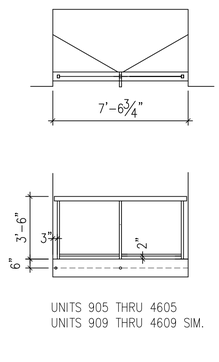

UNITS 905 THRU 4605
UNITS 909 THRU 4609 SIM.

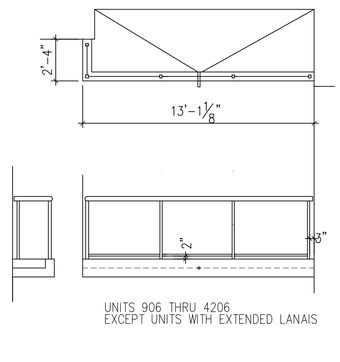

UNITS 906 THRU 4206
EXCEPT UNITS WITH EXTENDED LANAIS

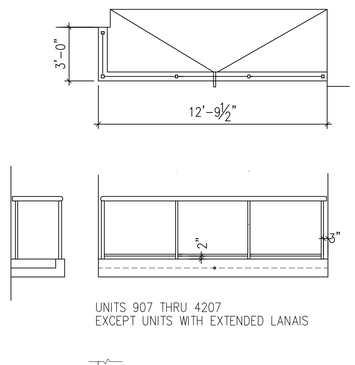

UNITS 907 THRU 4207
EXCEPT UNITS WITH EXTENDED LANAIS

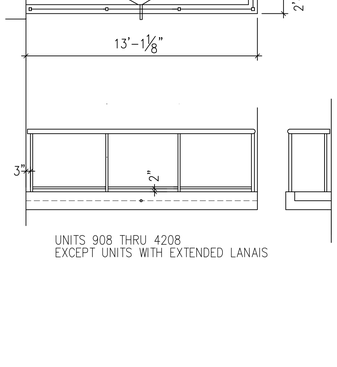

UNITS 908 THRU 4208
EXCEPT UNITS WITH EXTENDED LANAIS

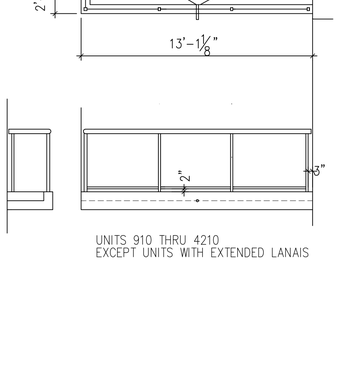

UNITS 910 THRU 4210
EXCEPT UNITS WITH EXTENDED LANAIS

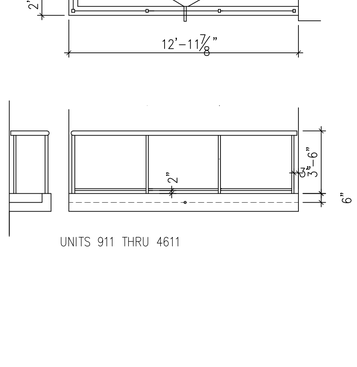

UNITS 911 THRU 4611

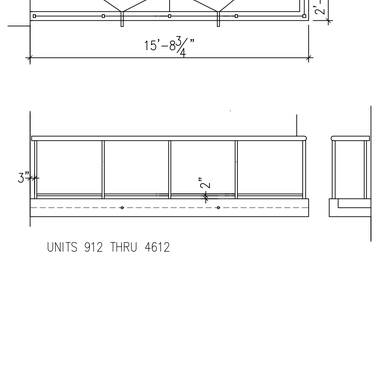

UNITS 912 THRU 4612

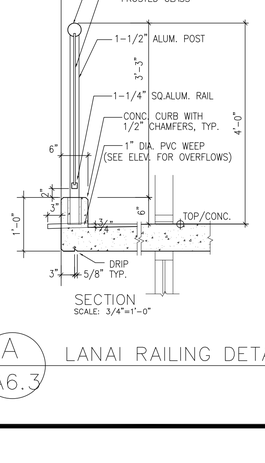

SECTION
SCALE: 3/4"=1'-0"

A
A6.3
LANAI RAILING DETAILS

LANAI RAILING DETAILS

REVISIONS

NO.	DATE
.	.

KAZUTOSHI YATO
LICENSED PROFESSIONAL ARCHITECT
No.3271
HAWAII, U.S.A.
Expiration Date: 4/30/2014

THIS PROJECT WAS PREPARED BY ME OR UNDER MY SUPERVISION AND CONSTRUCTION OF THIS PROJECT WILL BE UNDER MY SUPERVISION.

KAKAAKO WORKFORCE HOUSING PER
SUBCHAPTER 4 OF 2011 MAUKA PLAN AND RULES

801 SOUTH STREET
HONOLULU, HAWAII

LANAI RAILING DETAILS

KAZU YATO, AIA & ASSOCIATES, INC.
2033 ROUNDTOP TERRACE
HONOLULU, HI 96822
TEL: (808) 945-0040
FAX: (808) 945-1041

DATE	DRAWN	CHECK	FILE
	AF	KY	

SHEET

A6.4

GENERAL NOTES:

1. ALL MATERIALS WORKMANSHIP, DESIGN AND CONSTRUCTION SHALL CONFORM TO THE DRAWINGS, SPECIFICATIONS, AND THE INTERNATIONAL BUILDING CODE (IBC), 2006 EDITION, AS AMENDED BY THE CITY AND COUNTY OF HONOLULU.
2. REFERENCE TO ASTM AND OTHER STANDARDS SHALL MEAN EDITION YEAR, INCLUDING ADDENDA AND REVISIONS, LISTED IN IBC CHAPTER 35, UNLESS NOTED OTHERWISE.
3. THE STRUCTURAL DRAWINGS INDICATE ONLY THE BASIC STRUCTURAL FRAME. SEE ARCHITECTURAL, MECHANICAL, ELECTRICAL, AND OTHER DRAWINGS FOR ORNAMENTS, GROOVES, CLIPS, GROUNDS, SLAB DEPRESSIONS, CURBS, EQUIPMENT PADS, PENETRATIONS, NON-BEARING WALLS AND OTHER NON-STRUCTURAL ITEMS.
4. PRIOR TO FABRICATION, SHOP DRAWINGS REQUIRED BY THE SPECIFICATIONS SHALL BE REVIEWED AND APPROVED BY THE CONTRACTOR PRIOR TO SUBMITTAL TO THE ARCHITECT.
5. ARCHITECTURAL DRAWINGS ARE CONSIDERED A PART OF THE STRUCTURAL DESIGN DRAWINGS AND ARE TO BE USED TO DEFINE AND DETAIL CONFIGURATION INCLUDING, BUT NOT LIMITED TO: RELATIVE LOCATION OF MEMBERS, ELEVATIONS, LOCATIONS OF ALL OPENINGS, DEPRESSIONS, SLOPES, JOINTS, DIMENSIONS, GROOVES, NON-BEARING WALLS, FASCIA, ELEVATORS, STAIRS, CURBS/PADS, DRAINS, DUCTS, CHASES, PIPES, RAILINGS, WATERPROOFING, FINISHES AND OTHER NONSTRUCTURAL ITEMS TO BE INCORPORATED IN STRUCTURAL WORK. REFER TO TYPICAL STRUCTURAL DETAILS FOR LIMITATIONS. COORDINATE WORK OF ALL TRADES. PROVIDE WRITTEN NOTIFICATION OF ANY DISCREPANCIES TO THE ARCHITECT.
6. OPENING SIZES AND LOCATIONS WHEN INDICATED ON DRAWINGS ARE FOR INFORMATION ONLY AND SHALL BE VERIFIED WITH THE APPROPRIATE DRAWING AND/OR SUPPLIER BEFORE CONSTRUCTION.
   A. SEE ARCHITECTURAL DRAWINGS FOR SIZE AND LOCATION OF ALL FLOOR AND WALL OPENINGS.
   B. SEE MECHANICAL, PLUMBING AND ELECTRICAL DRAWINGS FOR SIZE AND LOCATION OF ALL OPENINGS REQUIRED FOR DUCTS, PIPES AND PIPE SLEEVES.
   C. OPENINGS OR POCKETS LARGER THAN 6 INCHES NOT INDICATED IN STRUCTURAL DRAWINGS SHALL NOT BE PLACED WITHOUT WRITTEN NOTIFICATION OF THE ARCHITECT.
   D. CONDUITS AND PIPES TO BE EMBEDDED IN CONCRETE SHALL SATISFY THE REQUIREMENTS OF ACI 318-05 SECTION 6.3.
7. GENERAL NOTES, SCHEDULES, AND TYPICAL DETAILS MAY NOT BE SPECIFICALLY REFERENCED IN DRAWINGS AND SHALL BE USED WHERE APPLICABLE, UNLESS NOTED OTHERWISE. DETERMINE WHERE EACH TYPICAL DETAIL OR SCHEDULE APPLIES BEFORE PROCEEDING WITH WORK. NOTES AND DETAILS ON THE DRAWINGS SHALL TAKE PRECEDENCE OVER GENERAL NOTES AND TYPICAL DETAILS.
8. WHERE DISCREPANCIES, OMISSIONS AND/OR CONFLICTS ARISE BETWEEN DRAWINGS, SPECIFICATIONS, BUILDING CODES, OR STANDARDS, CONTRACTOR SHALL PROVIDE WRITTEN NOTIFICATION TO THE ARCHITECT PRIOR TO PROCEEDING WITH ANY WORK INVOLVED.
9. DIMENSIONS SHALL NOT BE SCALED FROM THE PLANS, SECTIONS AND/OR DETAILS OF THE STRUCTURAL DRAWINGS.
10. EXISTING CONDITIONS ARE FOR GENERAL INFORMATION ONLY AND SHALL BE FIELD VERIFIED BY THE CONTRACTOR BEFORE WORK IS BEGUN. PROVIDE WRITTEN NOTIFICATION OF ANY DISCREPANCIES TO THE ARCHITECT BEFORE PROCEEDING WITH THE WORK.
11. SUBSTITUTIONS TO SPECIFIED MATERIALS OR DETAILS SHALL BE SUBMITTED IN WRITING FOR S.E.R. APPROVAL PRIOR TO SHOP DRAWINGS PRODUCTION OR FIELD USE. INCLUDE SUPPORTING DOCUMENTATION TO SHOW EQUIVALENCY. S.E.R. MAY REQUEST PAYMENT FOR REVIEWING SUBSTITUTION REQUESTS. A DEDUCTIVE CHANGE ORDER MAY ALSO BE REQUESTED.
12. ARCHITECTURAL, MECHANICAL, AND ELECTRICAL COMPONENTS, SUPPORTS AND ATTACHMENTS SHALL CONFORM WITH ASCE 7, CHAPTER 13. SEE DESIGN CRITERIA FOR SEISMIC DESIGN CATEGORY. ISOLATORS, FASTENERS AND OTHER ELEMENTS PROVIDING STABILITY FOR COMPONENTS SHALL BE APPROVED BY ICC OR EQUIVALENT TESTING PROCEDURES. PROVIDE SUSPENDED EQUIPMENT WITH APPROVED LATERAL OR SWAY BRACING. SEE SPECIFICATIONS FOR RESPONSIBILITY OF BRACING DESIGN.

CONSTRUCTION PROCEDURES & SAFETY REQUIREMENTS:

1. THE CONTRACT STRUCTURAL DRAWINGS AND SPECIFICATIONS REPRESENT THE FINISHED STRUCTURE. THEY DO NOT INDICATE THE MEANS OR METHOD OF CONSTRUCTION. PROVIDE ALL MEASURES NECESSARY TO PROTECT THE STRUCTURE, WORKMEN AND OTHER PERSONS DURING CONSTRUCTION. SUCH MEASURES SHALL INCLUDE, BUT NOT BE LIMITED TO: BRACING, SHORING FOR CONSTRUCTION EQUIPMENT, SHORING FOR THE BUILDING, SHORING FOR EARTH BANKS, FORMS, SCAFFOLDING, PLANKING, SAFETY NETS, SUPPORT AND BRACING FOR CRANES AND GIN POLES, ETC.
2. ENGAGE PROPERLY QUALIFIED PERSONS TO DETERMINE WHERE AND HOW TEMPORARY PRECAUTIONARY MEASURES SHALL BE USED AND INSPECT SAME IN FIELD.
3. COMPLY WITH ALL APPLICABLE CITY, COUNTY, STATE AND FEDERAL LAWS, INCLUDING THE OCCUPATIONAL SAFETY AND HEALTH ACT (OSHA) AND REGULATIONS ADOPTED PURSUANT THERETO.
4. CONSTRUCTION LOADS INCLUDING MATERIALS SHALL NOT EXCEED THE DESIGN LIVE LOAD AS INDICATED IN THE STRUCTURAL DESIGN CRITERIA. SPREAD OUT CONSTRUCTION MATERIALS IF PLACED ON FRAMED FLOOR/ROOF TO AVOID HEAVY CONCENTRATED LOADS. PROVIDE ADEQUATE SHORING, RESHORING AND/OR BRACING WHERE STRUCTURE HAS NOT ATTAINED DESIGN STRENGTH.
5. SUPERVISE AND DIRECT THE WORK SO AS TO MAINTAIN SOLE RESPONSIBILITY FOR COORDINATING THE WORK OF ALL TRADES AND THE CHECKING OF ALL DIMENSIONS. ALL DISCREPANCIES SHALL BE CALLED TO THE ATTENTION OF THE ARCHITECT IN WRITING AND SHALL BE RESOLVED BEFORE PROCEEDING WITH THE WORK.
6. SUPERVISE AND DIRECT THE WORK SO AS TO MAINTAIN SOLE RESPONSIBILITY FOR ALL EXCAVATION PROCEDURES INCLUDING, BUT NOT LIMITED TO: DEWATERING, LAGGING, SHORING, PROTECTION OF ADJACENT STRUCTURES, STREETS AND UTILITIES IN ACCORDANCE WITH ALL CITY, COUNTY, STATE AND FEDERAL SAFETY ORDINANCES.
7. SUPERVISE AND DIRECT THE WORK SO AS TO MAINTAIN SOLE RESPONSIBILITY FOR ALL CONSTRUCTION MEANS, METHODS, TECHNIQUES, SEQUENCES AND PROCEDURES. AS A PART OF THIS RESPONSIBILITY, RETAIN THE SERVICES OF A LICENSED STRUCTURAL ENGINEER TO DESIGN AND SUPERVISE ANY SCAFFOLDING FOR WORKMEN AND ALL SHORING OF FORMS AND ELEMENTS OF CONSTRUCTION.
8. OBSERVATION VISITS BY THE STRUCTURAL ENGINEER'S FIELD REPRESENTATIVE AND SPECIAL INSPECTIONS SHALL NOT INCLUDE INSPECTION OR REVIEW OF TEMPORARY PRECAUTIONARY MEASURES.

DESIGN CRITERIA:

1. THE STRUCTURAL DESIGN IS BASED ON THE PROVISIONS OF THE INTERNATIONAL BUILDING CODE (IBC), 2006 EDITION, AS AMENDED BY THE CITY & COUNTY OF HONOLULU.
2. DESIGN LOADS:
   A. IN ADDITION TO THE SELF WEIGHT OF THE STRUCTURE, THE FOLLOWING DESIGN UNIFORMLY DISTRIBUTED GRAVITY LOADS WERE USED FOR THE FINISHED STRUCTURAL DESIGN:

	LIVE LOAD UNIFORM	LIVE LOAD CONCENTRATED
1. ROOF	20 PSF	
2. FLOOR (RESIDENTIAL)	40 PSF	
3. DECKS	SAME AS OCCUPANCY SERVED	
4. GARAGE	40 PSF	3000 LBS
5. PUBLIC AREAS	100 PSF	
6. CORRIDORS, STAIRS, EXITS	100 PSF	300 LBS

   WHERE APPLICABLE, LIVE LOADS HAVE BEEN REDUCED BELOW THE TABULATED VALUES PER IBC SECTIONS 1607.11.2 (ROOF LIVE LOAD) AND 1607.9 (ALL OTHER LIVE LOADS).

   B. WIND DESIGN DATA:

1. BASIC WIND SPEED (3-SEC. GUST)	V = 105 MPH
2. OCCUPANCY CATEGORY	II (STANDARD)
3. WIND IMPORTANCE FACTOR	I = 1.0
4. EXPOSURE CATEGORY	B
5. DIRECTIONALITY FACTOR, Kd	0.75
6. TOPOGRAPHIC FACTOR	Kzt = 1.22
7. INTERNAL PRESSURE COEFFICIENT*	GCpi = ± 0.18

   C. EARTHQUAKE DESIGN DATA:

1. OCCUPANCY CATEGORY	II (STANDARD)
2. SEISMIC IMPORTANCE FACTOR	I = 1.0
3. MAPPED SPECTRAL ACCELERATIONS	S_s = 0.614g, S_1 = 0.178g
4. SITE CLASS	C
5. SPECTRAL RESPONSE COEFFICIENTS	S_{DS} = 0.4725, S_{D1} = 0.1925
6. SEISMIC DESIGN CATEGORY	C
7. ORDINARY REINFORCED CONCRETE SHEAR WALLS	
TOWER:	R = 4.0
PARKING GARAGE:	R = 5.0

   D. EQUIPMENT LOADS:
   1. WHERE APPLICABLE, EQUIPMENT LOADS HAVE BEEN INCREASED FOR IMPACT PER IBC 1607.8
   2. STRUCTURAL COMPONENTS ARE NOT DESIGNED FOR VIBRATORY EQUIPMENT. PLACE VIBRATORY EQUIPMENT ON VIBRATION ISOLATORS.
   3. LOADING OF MECHANICAL ROOMS ARE BASED ON WEIGHTS OF ASSUMED EQUIPMENT, AS INDICATED ON MECHANICAL DRAWINGS, INCLUDING WEIGHTS OF CONCRETE PADS, WHERE INDICATED. REPORT ANY PLANNED CHANGE IN TYPE, SIZE, LOCATION OR NUMBER OF EQUIPMENT TO ARCHITECT PRIOR TO ANY ACTION.
   4. ELEVATOR GUIDERAIL SUPPORTS, MACHINE ROOMS, PITS, AND PENTHOUSES ARE BASED ON ELEVATOR TYPES INDICATED ON ARCHITECTURAL DRAWINGS OR SPECIFICATIONS. WHEN CHANGES TO THE ELEVATOR ARE WARRANTED, CONTRACTOR SHALL PROVIDE WRITTEN NOTIFICATION TO THE ARCHITECT PRIOR TO PROCEEDING WITH ANY WORK INVOLVED

FOUNDATIONS:

1. THE FOUNDATION DESIGN HAS BEEN PREPARED BASED ON THE GEOTECHNICAL REPORTS AND ADDENDUMS PREPARED BY:

PROJECT GEOTECHNICAL ENGINEER:	AECOM
ENGINEER OF RECORD	JAMES NIEHOFF
LICENSE NO.	PE 10338
DATE:	JUNE 4, 2012
JOB REPORT NO.	60265447

   A. THE CONTRACTOR SHALL OBTAIN AND REVIEW THE REPORT AND ANY UPDATES OR ADDENDA PRIOR TO COMMENCING WORK. KEEP THE REPORT ON THE JOB SITE AT ALL TIMES. PRIOR TO COMMENCING FOUNDATION WORK, CONTACT THE GEOTECHNICAL ENGINEER TO VERIFY THE LISTED DESIGN VALUES.
   B. THE REASONABLENESS OF THESE ASSUMPTIONS SHALL BE VERIFIED BY THE CONTRACTOR PRIOR TO COMMENCING FOUNDATION WORK.
   C. SHALLOW FOUNDATION & RETAINING WALL DESIGN DATA:

   FOOTINGS DESIGNATED "F" OR "WF" MAY BEAR ON NEAR SURFACE MATERIAL BASED ON THE GEOTECHNICAL REPORT WITH AN ALLOWABLE BEARING PRESSURE OF 2,000 PSF.

ACTIVE LATERAL EARTH PRESSURE**	
RESTRAINED/UNRESTRAINED	45 PCF / 57 PCF
PASSIVE EARTH PRESSURE	300 PCF
FRICTION COEFFICIENT	0.35 FOR SAND, 0.6 FOR ROCK
MINIMUM FOOTING WIDTH	18"
MINIMUM FOOTING EMBEDMENT	24"
SITE CLASS	SEE "EARTHQUAKE DESIGN DATA"

   * VALUE MAY BE INCREASED 33% FOR WIND AND SEISMIC LOADING.
   ** LATERAL FLUID DESIGN PRESSURES FOR RETAINING AND SUBGRADE WALLS ARE BASED ON A DRAINED CONDITION. SEE GEOTECHNICAL REPORT AND CIVIL AND MECHANICAL DRAWINGS FOR DRAINAGE REQUIREMENTS.
   D. DEEP FOUNDATION DESIGN DATA:
   1. THE DRILLED PIER DESIGN HAS BEEN PREPARED BASED ON THE GEOTECHNICAL REPORT.
   2. PIERS SHALL BE 36 INCH DIAMETER WITH CAPACITIES INDICATED ON S-3.1.
   E. THE ABOVE INFORMATION HAS BEEN PROVIDED FOR REFERENCE ONLY. THE STRUCTURAL ENGINEER HAS NOT REVIEWED THE REPORT FOR COMPLETENESS OR ACCURACY. CONTACT THE GEOTECHNICAL ENGINEER DIRECTLY IN WRITING WITH ANY QUESTIONS OR CONFLICTS RELATING TO THIS INFORMATION.
2. THE STRUCTURAL DRAWINGS INDICATE GENERAL S.O.G. PREPARATION ONLY. SEE ARCH FOR WATERPROOFING AND GEOTECH. FOR SUBGRADE PREPARATION.
3. REFER TO THE REFERENCED REPORT FOR FOUNDATION AND SLAB-ON- GRADE PREPARATION, EXCAVATION, COMPACTION, AND DRAINAGE REQUIREMENTS. FOOTING EXCAVATIONS SHALL BE AS NEAT AS PRACTICABLE; LOOSE SOILS SHALL BE REMOVED PRIOR TO PLACEMENT OF REINFORCING AND CONCRETE.
4. ALL FILLING, BACKFILLING AND COMPACTING SHALL BE PER THE REFERENCED GEOTECHNICAL REPORT. EXPANSIVE SOILS SHALL NOT BE USED FOR BACKFILL OR FILL. BACKFILL AT RETAINING WALLS SHALL BE GRANULAR SOIL.
5. DO NOT PLACE BACKFILL BEHIND RETAINING WALLS BEFORE CONCRETE OR CMU HAS ATTAINED FULL DESIGN STRENGTH. CONTRACTOR SHALL BRACE OR PROTECT ALL BUILDING AND PIT WALLS BELOW GRADE FROM LATERAL LOADS UNTIL ATTACHING FLOORS ARE COMPLETELY IN PLACE AND HAVE ATTAINED FULL STRENGTH. CONTRACTOR SHALL PROVIDE FOR THE DESIGN, PERMITS AND INSTALLATION OF SUCH BRACING. CONTRACTOR SHALL COORDINATE WATERPROOFING AND DRAINAGE INSTALLATION WITH ARCHITECT AND CIVIL ENGINEER PRIOR TO BACKFILLING.

REINFORCED CONCRETE:

1. THE DESIGN AND CONSTRUCTION OF REINFORCED CONCRETE SHALL CONFORM TO THE ACI BUILDING CODE REQUIREMENTS (ACI 318-05) FOR REINFORCED CONCRETE INCLUDING THE FOLLOWING:
   A. CONCRETE MIXING . . . . . ASTM C94
   B. CONCRETE PLACEMENT . . . . . ACI 304
2. MATERIAL SHALL CONFORM TO ONE OF THE FOLLOWING STANDARD SPECIFICATIONS, LATEST EDITION:
   A. PORTLAND CEMENT . . . . . ASTM C150, TYPE II
   B. CONCRETE AGGREGATES . . . . . ASTM C33
   C. ADMIXTURES . . . . . ASTM C260, C494, AND C1017
   D. REINFORCING STEEL . . . . . ASTM A615, GRADE 60, #11 & #14 BARS GRADE 75, U.N.O.
   E. WELDED WIRE FABRIC (GALVANIZED) . . ASTM A185
3. CONCRETE SHALL ATTAIN THE FOLLOWING 28 DAY COMPRESSIVE STRENGTHS, UNLESS INDICATED OTHERWISE:
   A. FOUNDATIONS . . . . . 4000 PSI, U.N.O.
   B. SLABS ON GRADE . . . . . 3000 PSI
   C. POST TENSIONED SLABS & BEAMS . . . . . 5000 PSI, U.N.O.
   D. WALLS . . . . . SEE ELEVATIONS
   E. COLUMNS . . . . . SEE SCHEDULE
   F. SUSPENDED SLABS . . . . . 4000 PSI

   NO CHLORIDES OR CHLORIDE SALTS SHALL BE ALLOWED IN THE CONC. MIXES.

   CONCRETE ADMIXTURES CONTAINING CHLORIDE OR CHLORIDE SALTS SHALL NOT BE USED.
4. ALL REINFORCING STEEL DETAILING AND PLACEMENT SHALL CONFORM TO THE ACI DETAILING MANUAL – PUBLICATION SP-66 (LATEST EDITION) AND CRSI MSP-2 MANUAL OF STANDARD PRACTICE. PROVIDE ADEQUATE BOLSTERS, HI-CHAIRS, SUPPORT BARS, ETC., TO MAINTAIN SPECIFIED COVER FOR THE ENTIRE LENGTH OF ALL REINFORCING. SECURE ALL REINFORCING BARS, ANCHOR BOLTS AND OTHER CONCRETE INSERTS IN POSITION PRIOR TO PLACING CONCRETE.
5. CONCRETE MIXES SHALL BE DESIGNED BY A QUALIFIED TESTING LABORATORY AND SHALL BE SUBMITTED TO THE STRUCTURAL ENGINEER FOR HIS REVIEW.
6. THE REQUIRED SLUMP FOR PROPER PLACEMENT SHALL BE DETERMINED BY THE CONTRACTOR AND SUPPLIER AND INCLUDED IN THE MIX DESIGN SUBMITTAL. ACCEPTANCE OF PROPOSED SLUMP SHALL BE OBTAINED FROM THE ENGINEER PRIOR TO CONSTRUCTION. SLUMP SHALL CONFORM TO ASTM C94 AND MEET THE FOLLOWING TOLERANCES:

SLUMP	TOLERANCE
A. 2" AND LESS	± 1/2"
B. MORE THAN 2" THRU 4"	± 1"
C. MORE THAN 4"	± 1 1/2"

7. THE CONTRACTOR SHALL MAKE APPROPRIATE MODIFICATIONS TO MIXING, TRANSPORTING, PLACING, AND CURING PROCEDURES DURING PERIODS OF HOT, OR WINDY WEATHER IN ACCORDANCE WITH ACI 301.
8. CURE CONCRETE IN ACCORDANCE WITH ACI 301 FOR A MINIMUM OF 7 DAYS AFTER PLACEMENT. CURING COMPOUNDS SHALL BE USED ON CONCRETE IN ACCORDANCE WITH MANUFACTURER'S REQUIREMENTS. CURING COMPOUNDS USED ON CONCRETE THAT IS TO RECEIVE A FLOOR COVERING (i.e. RESILIENT TILE) SHALL BE APPROVED BY FLOOR COVERING MANUFACTURER BEFORE USE.
9. PROJECTING CORNERS OF BEAMS, WALLS, COLUMNS, ETC., SHALL BE FORMED WITH 3/4" CHAMFER, UNLESS OTHERWISE NOTED ON ARCHITECTURAL DRAWINGS.
10. FORMS FOR CONCRETE SHALL BE LAID OUT AND CONSTRUCTED TO PROVIDE THE SPECIFIED CAMBERS SHOWN ON THE DRAWINGS.
11. CONSTRUCTION JOINTS SHALL BE LOCATED AND CONSTRUCTED AS SHOWN IN STRUCTURAL DETAILS. THOROUGHLY CLEAN, REMOVE LAITANCE, WET AND REMOVE STANDING WATER IN JOINTS BEFORE PLACING NEW CONCRETE. FOR CONDITIONS WHERE A KEYWAY IS NOT SPECIFIED OR DETAILED, ROUGHEN EXISTING CONCRETE SURFACE OR APPLY A BONDING AGENT. PLACE BONDING AGENT IN ACCORDANCE WITH MANUFACTURER'S INSTRUCTIONS.
12. MINIMUM CONCRETE PROTECTION (COVER) FOR REINFORCEMENT SHALL BE PROVIDED IN CONFORMANCE WITH ACI 318-05, SECTION 7, INCLUDING THE FOLLOWING:

	MINIMUM CLEAR COVER, INCHES
A. CAST-IN-PLACE CONCRETE (NON-PRESTRESSED)	
• CONCRETE CAST AGAINST AND PERMANENTLY EXPOSED TO EARTH	3"
• FORMED SURFACES EXPOSED TO EARTH OR WEATHER:	
#6 BARS & LARGER	2"
#5 BARS & SMALLER	1 1/2"
• FORMED SURFACES NOT EXPOSED TO EARTH OR WEATHER:	
• SLABS, WALLS, JOISTS:	
#14 BARS & LARGER	1 1/2"
#11 BARS & SMALLER	3/4"
• BEAMS, COLUMNS:	
PRIMARY REINFORCEMENT, TIES, STIRRUPS, SPIRALS	1 1/2"

13. LAP REINFORCEMENT IN ACCORDANCE WITH REINFORCEMENT SPLICE AND DEVELOPMENT LENGTH SCHEDULE. PROVIDE CORNER BARS AT ALL WALL AND FOOTING INTERSECTIONS. LAP ADJACENT MATS OF WELDED WIRE FABRIC A MINIMUM OF TWO PANELS (12" MINIMUM).
14. WELDING OR TACK WELDING OF REINFORCING BARS TO OTHER BARS OR TO PLATES, ANGLES, ETC. IS PROHIBITED, EXCEPT WHERE SPECIFIED. WHERE SPECIFIED, WELDING SHALL BE DONE BY AWS CERTIFIED WELDERS USING E9018 ELECTRODES. WELDING PROCEDURES SHALL COMPLY WITH AWS D1.4. REINFORCING THAT IS WELDED SHALL CONFORM TO ASTM A706M. REINFORCING STEEL NOT CONFORMING TO ASTM A706 MAY BE USED IF MATERIAL PROPERTIES OF THE REINFORCING STEEL CONFORM TO AWS D1.4.
15. PROVIDE SLEEVES FOR PLUMBING AND ELECTRICAL OPENINGS IN CONCRETE BEFORE PLACING. DO NOT CUT ANY REINFORCING WHICH MAY CONFLICT. CORING IN CONCRETE IS NOT PERMITTED EXCEPT AS SHOWN. NOTIFY THE STRUCTURAL ENGINEER IN ADVANCE OF CONDITIONS NOT SHOWN ON THE DRAWINGS.
16. CONDUIT OR PIPE SIZE (O.D.) SHALL NOT EXCEED 30 PERCENT OF SLAB THICKNESS AND SHALL BE PLACED BETWEEN THE TOP AND BOTTOM REINFORCING UNLESS SPECIFICALLY DETAILED OTHERWISE. CONCENTRATIONS OF CONDUITS OR PIPES SHALL BE AVOIDED EXCEPT WHERE DETAILED OPENINGS ARE PROVIDED.
17. CONDUIT AND PIPE SLEEVES SHALL BE RIGID STEEL OR FLEXIBLE PLASTIC; ALUMINUM ITEMS SHALL NOT BE EMBEDDED IN CONCRETE. FIRMLY CHAIR AND TIE CONDUITS AND SLEEVES TO PREVENT DISPLACEMENT DURING POURING.
18. NON-SHRINK GROUT FOR BASE PLATES, SLEEVES, AND EMBEDDED STEEL SHALL BE FACTORY-PACKAGED WITH NATURAL AGGREGATES REQUIRING ONLY THE ADDITION OF WATER. GROUT STRENGTH SHALL BE AT LEAST 1,000 PSI HIGHER THAN THE SUPPORTING CONCRETE STRENGTH. GROUT SHALL BE MIXED AND PLACED IN ACCORDANCE WITH MANUFACTURER'S INSTRUCTIONS.
19. ALL ROUGHENED SURFACES IN CONCRETE SHALL BE MADE WITH A MINIMUM AMPLITUDE OF 1/4"
20. PROVIDE 2 WEEK SCHEDULE OF CONCRETE POURS. CONTRACTOR SHALL NOTIFY THE CONTRACTING OFFICER IN WRITING AT LEAST TWO WORKING DAYS PRIOR TO INSPECTION OF A CONCRETE POUR.
21. EPOXY GROUT FOR ANCHOR BOLTS AND DOWELS SHALL BE HILTI HIT RE500SD EPOXY ANCHOR SYSTEM OR AN APPROVED EQUAL, INSTALLED IN ACCORDANCE WITH MANUFACTURER'S RECOMMENDATIONS, UNO.
22. IN SLABS-ON-GRADE, PROVIDE (2)-#4x4'-0" DIAGONAL BARS IN THE MIDDLE OF THE SLAB AT EACH CORNER OF OPENINGS OVER 1'-0" SQUARE AND AT RE-ENTRANT CORNERS.

NO.	DATE	REVISIONS
.	.	.

STEVEN M. BALDRIDGE, LICENSED PROFESSIONAL ENGINEER, No. 7679-S, U.S.A.

THIS WORK WAS PREPARED BY ME OR UNDER MY SUPERVISION AND CONSTITUTES THE EXTENT OF WORK THAT WAS PERFORMED OR WILL BE UNDER MY OBSERVATION. CHAPTER 16-115, DEPARTMENT OF COMMERCE AND CONSUMER AFFAIRS

EXP. April 30, 2014

FOR BALDRIDGE & ASSOCIATES STRUCTURAL ENGINEERING, INC.

KAKAAKO WORKFORCE HOUSING PER SUBCHAPTER 4 OF 2011 MAUKA PLAN AND RULES

801 SOUTH STREET
HONOLULU, HAWAII

GENERAL NOTES

KAZU YATO, AIA & ASSOCIATES, INC.
2033 ROUNDTOP TERRACE
HONOLULU, HI 96822
TEL: (808) 845-0340
FAX: (808) 845-0341

DATE	DRAWN	CHECK	FILE
11/08/12	TD	SB	

SHEET

S-0.1

POST–TENSIONED CONCRETE NOTES:

GENERAL

1. POST–TENSIONED CONCRETE SHALL CONFORM TO THE REQUIREMENTS OF THE FOLLOWING DOCUMENTS (LATEST EDITION), EXCEPT AS MODIFIED BELOW:
   A. ACI 301 "STANDARD SPECIFICATIONS FOR STRUCTURAL CONCRETE"
   B. ACI 318 "BUILDING CODE REQUIREMENTS FOR STRUCTURAL CONCRETE"
   C. PTI "POST–TENSIONING MANUAL"
   D. PTI "SPECIFICATION FOR UNBONDED SINGLE STRAND TENDONS"
   E. PTI "FIELD PROCEDURES MANUAL FOR UNBONDED SINGLE STRAND TENDONS"
2. SHOP DRAWINGS: SHOP DRAWINGS ARE AN AID FOR FIELD PLACEMENT, AND ARE SUPERSEDED BY THE STRUCTURAL DRAWINGS. IT SHALL BE THE RESPONSIBILITY OF THE GENERAL CONTRACTOR TO MAKE CERTAIN THAT ALL CONSTRUCTION IS IN FULL AGREEMENT WITH THE LATEST STRUCTURAL DRAWINGS.
3. SHOP DRAWING CHECK: THE CONTRACTOR SHALL SUPPLY THE ENGINEER WITH TWO BLUELINE SETS OF SHOP DRAWINGS A MINIMUM OF THREE WEEKS PRIOR TO FABRICATION. THE REVIEW OF SHOP DRAWINGS BY THE ENGINEER IS ONLY FOR GENERAL COMPLIANCE WITH THE STRUCTURAL DRAWINGS AND SPECIFICATIONS. THE REVIEW DOES NOT GUARANTEE IN ANY WAY THAT THE SHOP DRAWINGS ARE CORRECT NOR DOES IT INFER THAT THEY SUPERSEDE THE STRUCTURAL DRAWINGS. THE CONTRACTOR SHALL REVIEW AND APPROVE THE SHOP DRAWINGS PRIOR TO SUBMITTAL TO THE ENGINEER.

POST–TENSIONING

1. FIELD FOREMAN: THE FIELD FOREMAN RESPONSIBLE FOR THE PLACEMENT OF ALL POST–TENSIONING SHALL HAVE A MINIMUM OF THREE (3) YEARS IN THIS CAPACITY FOR THIS TYPE OF CONSTRUCTION.
2. PT STEEL QUALITY: ONE SAMPLE OF EACH REEL OR HEAT SHALL BE TESTED BY AN APPROVED LABORATORY. TEST RESULTS OR MILL CERTIFICATES SHALL BE SUBMITTED TO THE ENGINEER BEFORE STRESSING OF TENDONS. POST–TENSIONING TENDONS SHALL BE OF LOW– RELAXATION QUALITY, AND SHALL CONFORM TO THE FOLLOWING:
   A. SEVEN WIRE STRAND ASTM DESIGNATION A–416
   B. 1/2" DIAMETER TENDON AREA . . . . . 0.153 IN SQ.
   C. ULTIMATE STRENGTH . . . . . 270 KSI

   TENDON STRESSES SHALL CONFORM TO THE FOLLOWING:
   A. MAXIMUM JACKING STRESS . . . . . 216 KSI
   B. MAXIMUM STRESS IMMEDIATELY AFTER PRESTRESS TRANSFER . . . . . 200 KSI
   C. MAXIMUM ANCHORAGE STRESS IMMEDIATELY AFTER PRESTRESS TRANSFER . . . . . 189 KSI
3. EFFECTIVE FORCE: EFFECTIVE FORCE SHALL BE 26.5 KIPS PER LOW–RELAXATION TENDON, WHEN TENDON LENGTH IS LESS THAN 100 FEET. FOR VARIANCE FROM THIS VALUE, CONTRACTOR SHALL PROVIDE FRICTION AND LONG–TERM LOSS CALCULATIONS FOR THE ENGINEER'S APPROVAL.
4. PT HARDWARE QUALITY: ALL ANCHORAGES, COUPLERS AND MISCELLANEOUS HARDWARE SHALL BE STANDARD AND APPROVED BY GOVERNING AGENCIES AND THE ENGINEER.
5. TENDONS: UNBONDED STRANDS SHALL BE ENCASED IN SLIPPAGE SHEATHING WHICH SHALL CONSIST OF A SEALED DURABLE WATERPROOF PLASTIC TUBING CAPABLE OF PREVENTING THE PENETRATION OF MOISTURE AND CEMENT PASTE, AND WHICH WILL CONTAIN A RUST–INHIBITING GREASE COATING. TEARS IN THE SHEATHING SHALL BE REPAIRED TO RESTORE THE WATER TIGHTNESS OF THE SHEATHING. HEAT–SEALED SHEATHING SHALL NOT BE USED UNLESS THE WATER TIGHTNESS OF THE SHEATHING IS GUARANTEED BY THE CONTRACTOR.
6. SHOP DRAWINGS: THE CONTRACTOR SHALL SUBMIT SHOP DRAWINGS SHOWING TENDON LAYOUT, DEAD–END AND STRESSING–END LOCATIONS, AND TENDON SUPPORT LAYOUTS WITH DETAILS NECESSARY FOR INSTALLATION FOR THE ENGINEER'S REVIEW.
7. TENDON PLACEMENT: CARE SHALL BE TAKEN THAT TENDONS ARE LOCATED AND HELD IN THEIR DESIGNED POSITIONS. TOLERANCES FOR THE LOCATION OF THE PRESTRESSING STEEL SHALL NOT BE MORE THAN ±1/8" VERTICALLY, EXCEPT AS NOTED OR APPROVED BY THE ENGINEER. ACCESS TO STRESSING ENDS SHALL BE MAINTAINED WHERE SHOWN.
8. TENDON ADJUSTMENTS: SLIGHT DEVIATIONS IN THE HORIZONTAL SPACING OF THE SLAB TENDONS WILL BE PERMITTED WHEN REQUIRED TO AVOID OPENINGS, INSERTS, AND DOWELS WHICH ARE SPECIFICALLY LOCATED. WHERE LOCATIONS OF TENDONS SEEM TO INTERFERE WITH EACH OTHER, ONE TENDON MAY BE MOVED HORIZONTALLY IN ORDER TO AVOID THE INTERFERENCE.
9. TWISTING: TWISTING OR ENTWINING OF INDIVIDUAL WIRES OR STRANDS WITHIN A BUNDLE OR A BEAM SHALL NOT BE PERMITTED.
10. STRAND BUNDLES: THE MAXIMUM ALLOWABLE NUMBER OF STRANDS PER BUNDLE IS FOUR (4) FOR SLABS AND SIX (6) FOR BEAMS.
11. PROFILES: PROFILES SHALL CONFORM TO CONTROLLING POINTS SHOWN ON THE DRAWINGS AND SHOULD BE IN AN APPROXIMATE PARABOLIC DRAPE BETWEEN SUPPORTS, UNLESS NOTED OTHERWISE. LOW POINTS ARE AT MIDSPAN UNLESS NOTED OTHERWISE. HARPED TENDONS SHALL BE STRAIGHT BETWEEN HIGH AND LOW POINT CONTROLS.
12. PRESTRESS COVER: ALL DIMENSIONS SHOWING THE LOCATION OF PRESTRESSING TENDONS ARE TO THE CENTER OF GRAVITY OF THE TENDON (CGS) UNLESS NOTED OTHERWISE.
13. MINIMUM CHAIRING: TENDONS SHALL BE SECURED TO A SUFFICIENT NUMBER OF POSITIONING DEVICES TO ENSURE CORRECT LOCATION DURING AND AFTER THE PLACING OF THE CONCRETE AND SHALL BE SUPPORTED AT A MAXIMUM OF 3'–6" ON CENTER. CHAIRS GREATER THAN 2.5" IN SIZE SHALL BE STAPLED TO THE FORMWORK.
14. ANCHORS: ANCHORS SHALL NOT OVERLAP AND ARE TO BE INSTALLED SIDE BY SIDE. ANCHORAGES SHALL BE RECESSED A MINIMUM OF TWO (2) INCHES. PLACE TWO (2) CONTINUOUS #4 BARS BEHIND ALL ANCHORAGES, UNLESS NOTED OTHERWISE. SPLICES SHALL BE 24" MINIMUM AND STAGGERED.
15. BLOCKOUTS: ALL POCKETS OR BLOCKOUTS REQUIRED FOR ANCHORAGE SHALL BE ADEQUATELY REINFORCED SO AS NOT TO DECREASE THE STRENGTH OF THE STRUCTURE. ALL POCKETS SHOULD BE WATERPROOFED TO ELIMINATE WATER LEAKAGE THROUGH OR INTO THE POCKET.
16. PIPES: PLASTIC OR METAL CONDUITS MAY BE EMBEDDED IN THE SLAB PROVIDING THAT THE FOLLOWING CRITERIA ARE MET:
   A. PIPES OTHER THAN ELECTRICAL CONDUITS SHALL NOT BE EMBEDDED IN STRUCTURAL CONCRETE EXCEPT WHERE SPECIFICALLY APPROVED BY THE ENGINEER. MAXIMUM PIPE SIZE SHALL BE 1" DIA. AND LOCATED WITHIN THE MIDDLE THIRD OF THE SLAB. MINIMUM SPACING SHALL BE SIX (6) TIMES THE PIPE DIAMETER. PIPES SHALL NOT IMPAIR THE STRENGTH OF THE MEMBER.
   B. CONDUITS MUST NOT INTERRUPT THE POST–TENSIONED CABLES.
   C. COLUMN AREAS SHOULD BE AVOIDED.
   D. IT IS UNDESIRABLE TO HAVE EXCESS AMOUNTS OF CONDUIT ENTERING THE SLAB FROM ONE LOCATION. IF THIS CONDITION EXISTS, THE CONDUITS MUST BE FANNED OUT IMMEDIATELY.
17. PENETRATIONS: PENETRATIONS SHALL NOT BE PERMITTED IN BEAMS OR DROP CAPS EXCEPT AS SHOWN IN PT DRAWINGS OR TYPICAL DETAILS.
18. INSERTS: ALL INSERTS AND SLEEVES SHALL BE CAST IN PLACE WHENEVER POSSIBLE. DRILLED AND POWER–DRIVEN FASTENERS WILL BE PERMITTED ONLY WHEN IT CAN BE SHOWN THAT THE INSERTS WILL NOT SPALL THE CONCRETE AND ARE LOCATED TO AVOID THE TENDONS AND ANCHORAGES. THE CONTRACTOR MUST LOCATE TENDONS ON THE SURFACE SLAB.
19. CHLORIDES: GROUT OR CONCRETE CONTAINING CHLORIDES SHALL NOT BE USED.
20. PUMPED CONCRETE: IF CONCRETE IS PLACED BY THE PUMP METHOD, THEN HORSES SHALL BE PROVIDED TO SUPPORT THE HOSE. THE HOSE SHALL NOT BE ALLOWED TO RIDE ON THE TENDONS.
21. CONCRETE CONSOLIDATION: THE CONTRACTOR SHALL TAKE PRECAUTIONS TO ASSURE COMPLETE CONSOLIDATION AND DENSIFICATION OF CONCRETE BEHIND ALL POST–TENSIONING ANCHORAGES.
22. CONCRETE STRENGTH AT STRESSING: PERFORM TENSIONING AFTER CONCRETE HAS REACHED A MINIMUM OF 75% OF THE SPECIFIED 28 DAYS COMPRESSIVE STRENGTH. A MINIMUM OF TWO CYLINDERS MUST ATTAIN REQUIRED COMPRESSIVE STRENGTH BEFORE CONCRETE TENSIONING OPERATIONS MAY BEGIN.
23. TENDON STRESSING: TENSIONING SHALL BE DONE BY JACKING UNDER IMMEDIATE CONTROL OF A PERSON EXPERIENCED IN THIS TYPE OF WORK. CONTINUOUS INSPECTION AND RECORDING OF ELONGATIONS IS REQUIRED DURING ALL STRESSING OPERATIONS.
24. CALIBRATION: THE RAM AND ATTENDANT GAUGE USED SHALL HAVE BEEN CALIBRATED WITHIN SIXTY (60) DAYS OF THEIR USE.
25. STRESSING SEQUENCE: UNIFORMLY DISTRIBUTED TENDONS SHALL BE STRESSED BEFORE CONCENTRATED BEAM STRIP (BANDED) TENDONS, AND SLAB TENDONS SHALL BE STRESSED BEFORE BEAM TENDONS.
26. ELONGATIONS: INDIVIDUAL TENDON FIELD READINGS OF ELONGATIONS AND/OR STRESSING FORCES SHALL NOT VARY BY MORE THAN ±7% FROM CALCULATED REQUIRED VALUES SHOWN ON THE SHOP DRAWINGS. IF THE MEASURED ELONGATIONS VARY FROM CALCULATED VALUES BY MORE THAN ±7%, THE CONTRACTOR SHALL PROVIDE FRICTION CALCULATIONS AND/OR OTHER JUSTIFICATION TO THE SATISFACTION OF THE ENGINEER.
27. MEMBER FORCES: THE POST–TENSIONED FORCE PROVIDED IN THE FIELD FOR EACH STRUCTURAL MEMBER SHALL NOT BE LESS THAN THE VALUES NOTED ON THE STRUCTURAL DRAWINGS, IN THIS CONTEXT, STRUCTURAL MEMBERS ARE BEAMS OR SLABS, WHETHER WITH BANDED OR DISTRIBUTED TENDONS, EACH SERVING THEIR RESPECTIVE TRIBUTARY AREA.
28. TENDON ENDS: DO NOT BURN OFF TENDON ENDS UNTIL THE ENTIRE FLOOR SYSTEM HAS BEEN SATISFACTORILY STRESSED AND THE ENGINEER'S APPROVAL IS OBTAINED. THE STRESSING END ANCHORS AND WEDGES SHALL BE SPRAY PAINTED WITH RUST–OLEUM OR A SIMILAR COATING FOR CORROSION PROTECTION. INSTALL GREASE CAPS WITHIN THE FOLLOWING 24–HOUR PERIOD.
29. GROUTING OF STRESSING POCKETS: STRESSING POCKETS SHALL BE FILLED WITH NON–SHRINK GROUT AFTER STRESSING, PAINTING & GREASE–CAPPING TO STOP MOISTURE PENETRATION.
30. DE–SHORING: SLABS OR BEAMS MAY BE DE–SHORED WHEN ALL TENDONS HAVE BEEN SATISFACTORILY STRESSED AND THE ENGINEER'S APPROVAL IS OBTAINED, UNLESS SHORING IS REQUIRED TO CARRY FLOORS ON ABOVE LEVELS.

OWNER NOTES:

1. FOUNDATIONS:
   UNDER NORMAL CONDITIONS AND FOR CONVENTIONAL STRUCTURES, SUCH AS THE SUBJECT BUILDINGS, REINFORCED CONCRETE FRAMES, AS WELL AS PILES AND GRADE SLABS ARE SUBJECT TO CERTAIN RELATIVE SETTLEMENTS. THESE SETTLEMENTS ARE DUE TO THE INHERENT NATURE OF THE SUPPORTING SOIL AND OTHER ENVIRONMENTAL CAUSES THAT MAY EFFECT THE PERFORMANCE OF THE SUBJECT FOUNDATION SYSTEM. IT SHOULD BE UNDERSTOOD THAT ALTHOUGH EVERY EFFORT HAS BEEN MADE TO REDUCE DAMAGE DUE TO RELATIVE SETTLEMENTS, DUE TO ECONOMIC REASONS THE STRUCTURAL DESIGN PRESENTED DOES NOT AIM AT COMPLETE INHIBITION OF RELATIVE SETTLEMENTS. WE JUDGE THAT THE PRESENT DESIGN HAS BEEN PREPARED IN ACCORDANCE WITH THE STANDARDS OF PRACTICE AS SET BY STRUCTURAL ENGINEERS IN THE AREA. WE OFFER NO OTHER WARRANTIES OR GUARANTIES. THEREFORE, THE SUBJECT STRUCTURE SHOULD BE MONITORED FOR SUCH SETTLEMENTS ON A REGULAR BASIS. IF NECESSARY A REPAIR AND MAINTENANCE PROGRAM, INCLUDING PROPERLY MAINTAINING THE SITE, DRAINAGE FACILITIES, ETC. SHOULD BE DEVISED AND IMPLEMENTED ON A REGULAR BASIS.
2. CONCRETE STRUCTURAL FRAME:
   UNDER NORMAL CONDITIONS, AND FOR CONVENTIONAL BUILDINGS, SUCH AS THE SUBJECT STRUCTURE, CIP AS WELL AS POST–TENSIONED CONCRETE DEVELOPS CRACKS. THE CRACKS ARE DUE TO INHERENT SHRINKAGE OF CONCRETE, CREEP AND RESTAINING EFFECTS OF WALLS, COLUMNS AND OTHER STRUCTURAL ELEMENTS TO WHICH THE BEAM/SLAB ARE TIED.
   THE CRACKS FORMED ARE NORMALLY COSMETIC. THE SLABS MAINTAIN THEIR SERVICEABILITY AND STRENGTH REQUIREMENTS. DUE TO SPECIAL FEATURES OF UNBONDED POST–TENSIONING, IT IS POSSIBLE THAT A NUMBER OF HAIRLINE CRACKS, WHICH WOULD NORMALLY SPREAD OVER A WIDE AREA, WILL INTEGRATE INTO A SINGLE CRACK WITH A WIDTH EXCEEDING 0.01 IN. IT IS EMPHASIZED THAT ALTHOUGH SPECIAL EFFORT IS MADE TO REDUCE THE POTENTIAL CAUSES OF CRACKS, DUE TO ECONOMIC CONSIDERATION, THE BEAM/SLAB DESIGN PRESENTED DOES NOT AIM AT PROVIDING TOTAL ARTICULATION BETWEEN THE SLAB AND THE COLUMNS/WALLS, NOR A COMPLETE INHIBITION OF ALL CRACKS.
   THE OBJECT OF THE JOINTS PROVIDED IS TO ALLOW MOVEMENT. MOVEMENTS DUE TO CREEP AND SHRINKAGE MAY BE NOTICEABLE AT JOINTS UP TO TWO YEARS AFTER CONSTRUCTION, BEYOND WHICH MOVEMENTS DUE TO VARIATIONS IN TEMPERATURE WILL PERSIST.
   MOST SUCH CRACKS DEVELOP OVER THE FIRST THREE YEARS OF THE LIFE OF THE FRAMING SYSTEMS. (WALLS, COLUMNS, FLOORS, ETC.) CRACKS WHICH ARE WIDER THAN 0.01 INCH MAY NEED TO BE PRESSURE EPOXIED. REFER TO THE NOTES UNDER "ALLOWANCES".
3. MAINTENANCE:
   THE ENTIRE CONCRETE FRAME, INCLUDING FOUNDATIONS, ELEVATED SLABS, COLUMNS, BEAMS, WALLS, AND SLAB–ON–GRADE REQUIRE STRICT MONITORING AND MAINTENANCE IN ORDER TO REMAIN SERVICEABLE AND SAFE.
   DETAILS OF THE MAINTENANCE PROGRAM APPLICABLE TO THIS PROJECT MUST BE COMPILED BY THE OWNER AND SUBMITTED TO ITS FACILITY MAINTENANCE DEPARTMENT.
   ALL MAJOR STRUCTURAL ELEMENTS, INCLUDING COLUMNS, POST– TENSIONED AND REINFORCED CONCRETE BEAMS AND SLABS, TRANSFER BEAMS, COUPLING BEAMS, RETAINING WALLS, ETC. SHOULD BE INSPECTED AND MONITORED AFTER ALL MAJOR ACCIDENTS AND/OR NATURAL OCCURRENCES, SUCH AS FLOODING, FIRES, EARTHQUAKES, ETC. ALL DAMAGES SHOULD BE REVIEWED BY A LICENSED STRUCTURAL ENGINEER AND BE REPAIRED IMMEDIATELY.

CONCRETE MASONRY (C.M.U.):

1. MASONRY WORK SHALL CONFORM WITH THE REQUIREMENTS OF CHAPTER 21 OF THE INTERNATIONAL BUILDING CODE, 2006 EDITION AND ACI 530.
2. CONCRETE BLOCK SHALL BE HOLLOW LOAD–BEARING CONCRETE MASONRY UNITS. SEE ARCH. DWGS. FOR SPECIAL FINISHES & TEXTURES. CONCRETE MASONRY MATERIALS SHALL CONFORM TO ONE OF THE FOLLOWING STANDARD SPECIFICATIONS, LATEST EDITION:
   A. CONCRETE MASONRY UNITS . . . . . ASTM C–90, NORMAL WEIGHT
   B. PORTLAND CEMENT (NON FLORESCENT) . . . . . ASTM C150
   C. REINFORCING STEEL . . . . . ASTM A615 (GRADE 60)
   D. COMPRESSIVE STRENGTH OF C.M.U. ASSEMBLY . . . . . f'm = 2500 PSI
3. MORTAR AND GROUT SHALL CONFORM WITH THE PROVISIONS OF IBC SECTION 2103 AND THE FOLLOWING:
   A. MORTAR SHALL BE ASTM C270, TYPE S PROPORTIONED IN ACCORDANCE WITH IBC TABLE 2103.7(1) AND SHALL ATTAIN A COMPRESSIVE STRENGTH OF 2,000 PSI AT 28 DAYS. MIX BY MECHANICAL MEANS. MASONRY CEMENT SHALL NOT BE USED AND ADMIXTURES SHALL NOT BE ADDED TO MORTAR UNLESS SPECIFIED. THE INITIAL BED JOINTS SHALL BE 1/4" – 3/4". THE FIRST COURSE SHALL HAVE FULL BED JOINTS INCLUDING THE WEB
   B. GROUT SHALL BE ASTM C476 PROPORTIONED IN ACCORDANCE WITH IBC TABLE 2103.10 AND SHALL ATTAIN A COMPRESSIVE STRENGTH OF 3,000 PSI AT 28 DAYS. DO NOT USE GROUT OR ADMIXTURES CONTAINING CHLORIDES. MAXIMUM GROUT POUR HEIGHT SHALL CONFORM TO ACI 530.1, TABLE 7. MECHANICALLY VIBRATE DURING PLACEMENT TO ENSURE THAT CELLS ARE COMPLETELY FILLED.
4. GROUTING OF MASONRY SHALL CONFORM WITH THE PROVISIONS OF IBC SECTION 2104 AND THE FOLLOWING:
   A. LOW LIFT CONSTRUCTION SHALL BE UTILIZED WITH A MAXIMUM GROUT LIFT HEIGHT OF 5'–4". GROUT SOLID ALL CELLS IN CONCRETE BLOCK UNLESS OTHERWISE NOTED ON THE DRAWINGS.
   B. WALLS SHALL BE CONSTRUCTED IN CONVENTIONAL RUNNING BOND WITH CELLS IN VERTICAL ALIGNMENT.
   C. PROVIDE A MINIMUM OF 1/2" GROUT BETWEEN VERTICAL AND BOND BEAM REINFORCING AND MASONRY UNITS.
   D. CMU SHALL HAVE 100% BEARING ON FOOTING
5. CONCRETE SURFACES SHALL BE CLEANED OF ALL LAITANCE PRIOR TO SETTING BLOCKS. DOWELS IN FOOTING SHALL BE SET TO ALIGN WITH CORES CONTAINING REINFORCING STEEL.
6. REFER TO ARCHITECTURAL DRAWINGS FOR SURFACE TEXTURE AND HEIGHT OF UNITS, LAYING PATTERN AND JOINT TYPE. NOTIFY THE ARCHITECT IN WRITING IF A CONFLICT EXISTS BETWEEN ARCHITECTURAL DRAWINGS AND THESE NOTES.
7. REINFORCING BARS: SEE CONCRETE REINFORCEMENT SECTION. PROVIDE BAR POSITIONING DEVICES FOR ALL VERTICAL REINFORCING AT THE TOP AND BOTTOM OF THE MASONRY SECTION. VERTICAL REINFORCING STEEL SHALL HAVE CONTACT SPLICES UTILIZING TIE WIRE CONNECTIONS. NO VERTICAL REINFORCING DOWELS SHALL BE "DROPPED IN" PRIOR TO GROUT.
8. CONDUIT EMBEDDED IN CMU SHALL BE KEPT TO A MINIMUM AND SHALL NOT EXCEED THE LIMITS OF ACI 530
9. QUALITY ASSURANCE PROVISIONS INCLUDING THE REQUIREMENTS FOR SPECIAL INSPECTION SHALL COMPLY WITH IBC CHAPTER 17

STRUCTURAL STEEL FRAMING:

1. STRUCTURAL STEEL SHALL BE DETAILED, FABRICATED AND ERECTED IN ACCORDANCE WITH THE "AISC SPECIFICATION FOR THE DESIGN, FABRICATION AND ERECTION OF STRUCTURAL STEEL FOR BUILDINGS," LATEST EDITION.
2. THE STRUCTURAL STEEL FABRICATOR AND STEEL DECK MANUFACTURER SHALL FURNISH SHOP DRAWINGS OF ALL STEEL AND STEEL DECKING, RESPECTIVELY. SHOP DRAWINGS SHALL BE REVIEWED AND APPROVED BY THE CONTRACTOR PRIOR TO SUBMITTAL TO THE ARCHITECT. FABRICATION SHALL NOT BEGIN PRIOR TO THE COMPLETION OF THE SHOP DRAWING REVIEW PROCESS.
3. STRUCTURAL STEEL MATERIALS SHALL CONFORM TO ONE OF THE FOLLOWING STANDARD SPECIFICATIONS, LATEST EDITION:
   A. STRUCTURAL STEEL WIDE FLANGE SHAPES . . . . . ASTM A992
   B. STRUCTURAL STEEL CHANNELS, ANGLES, & PLATES . . . . . ASTM A36
   C. HOLLOW STRUCTURAL SECTIONS (HSS) . . . . . ASTM A500, GRADE B
   D. STEEL PIPE . . . . . ASTM A53, TYPE E OR GRADE B
   E. ANCHOR BOLTS . . . . . ASTM F1554, GRADE 36
   F. HIGH STRENGTH BOLTS . . . . . ASTM A325 OR A490, AS INDICATED
   G. HEADED STUDS . . . . . ASTM A108, TYPE B
4. CONNECTIONS OF STRUCTURAL STEEL SHALL CONFORM TO THE LATEST EDITION OF THE AISC MANUAL OF STEEL CONSTRUCTION AND THE FOLLOWING:
   A. BOLTED CONNECTIONS – ASTM A325–N WITH SNUG–TIGHT JOINT, UNLESS NOTED OTHERWISE. (WHERE CONNECTIONS ARE NOTED AS SLIP CRITICAL (SC), USE A325–SC BOLTS WITH LOAD–INDICATING WASHERS OR TENSION CONTROL BOLTS.) ALL BOLT HOLES IN STEEL SHALL BE STANDARD HOLES (1/16" LARGER THAN NOMINAL BOLT DIAMETER), UNLESS NOTED OTHERWISE. CONNECTIONS SHALL CONFORM WITH RCSC SPECIFICATION FOR STRUCTURAL JOINTS USING ASTM A325 OR A490 BOLTS.
   B. WELDED CONNECTIONS – PERFORMED BY AWS CERTIFIED WELDERS IN CONFORMANCE WITH AWS D1.1, U.N.O. ALL WELDS SHALL BE E70XX ELECTRODES. WELDING SHALL BE DONE USING MATCHING FILLER MATERIAL PER TABLE 3.1 AWS D1.1 USE ONLY LOW–HYDROGEN ELECTRODES ON ASTM A572 AND A992 STEEL.
   C. WELDS SHOWN ON DRAWINGS ARE MINIMUM SIZES. INCREASE WELD SIZE TO AWS MINIMUM SIZES BASED ON PLATE THICKNESS.
   D. WELDS SHOWN ON DRAWINGS ARE FOR FINAL CONNECTIONS. UNLESS FIELD WELD SYMBOLS ARE SHOWN, CONTRACTOR SHALL BE RESPONSIBLE FOR DETERMINING IF A WELD SHOULD BE SHOP OR FIELD WELDED IN ORDER TO FACILITATE STEEL ERECTION. CONTRACTOR SHALL BE RESPONSIBLE FOR ALL JOINT PREPARATIONS AND WELDING PROCEDURES, INCLUDING ROOT OPENINGS AND FACE DIMENSIONS, GROOVE ANGLES, BACKING BARS, COPES, TAPERS, AND SURFACE ROUGHNESS. ALL WELDING PROCEDURES & WELDING CERTIFICATES SHALL BE SUBMITTED TO ENGINEER PRIOR TO PERFORMING THE WORK. FINAL COPY TO BE PROVIDED TO THE SPECIAL INSPECTOR. WELDING CERTIFICATES THAT EXCEED ONE YEAR OLD FROM TIME OF CERTIFICATION WILL REQUIRE EVIDENCE THAT WELDER HAS PERFORMED EACH PROCESS OF WELDING FOR WHICH THE WELDER IS QUALIFIED FOR WITHIN THE LAST 6 MONTHS.
   E. WHERE NOT INDICATED ON DRAWINGS, ALL WELDS SHALL BE CONTINUOUS 3/16" FILLET WELDS, BUT NOT GREATER THAN THE AISC MAXIMUM OR LESS THEN THE AISC MINIMUM BASED ON THE THICKNESS OF THE PARTS JOINED.
   F. TOUCH UP FIELD WELDS AND CONNECTIONS AS WELL AS ABRADED AND RUSTED SHOP PAINT WITH SAME PAINT USED IN SHOP.
   G. HEADED STUDS AND DEFORMED BARS SHALL BE AUTOMATICALLY END WELDED IN ACCORDANCE WITH AWS D1.1.
5. CAMBER: ALL MEMBERS SHALL BE ERECTED WITH NATURAL OR INDUCED CAMBER UPWARDS, UNLESS NOTED OTHERWISE. CAMBER INDICATED ON DRAWINGS SHALL BE AS DELIVERED TO THE JOB SITE. CONTRACTOR SHALL CONSIDER CAMBER LOSS DUE TO SHIPPING AND HANDLING.
6. FIELD MODIFICATIONS OF STRUCTURAL STEEL SUCH AS THE BURNING OF HOLES, CUTTING OF STEEL, AND HEATING AND BENDING OF STEEL OR ANCHOR RODS SHALL NOT BE ALLOWED.
7. THE SPLICING OF STRUCTURAL STEEL WHERE NOT INDICATED SHALL NOT BE ALLOWED.
8. ALL STRUCTURAL STEEL SURFACES THAT ARE ENCASED IN CONCRETE SHALL BE LEFT UNPAINTED.
9. STRUCTURAL STEEL AND MISCELLANEOUS METAL EXPOSED TO WEATHER SHALL BE HOT–DIPPED GALVANIZED PER ASTM A123 AFTER FABRICATION. ALL FIELD WELDS EXPOSED TO WEATHER SHALL BE COATED WITH BRUSH APPLIED PAINT CONTAINING ZINC DUST COMPLYING WITH ASTM A780. ALL BOLTS AND ANCHOR RODS EXPOSED TO WEATHER SHALL BE HOT–DIPPED GALVANIZED PER ASTM A153.
10. ALL GROUT (OR DRYPACK) BELOW BASE PLATES, BEAMS BEARING ON CONCRETE WALLS, ETC., SHALL BE NON–SHRINK WITH f'c = 7,000 PSI. SEE SPECIFICATIONS FOR ADDITIONAL INFORMATION INCLUDING THE TESTING AND INSPECTION REQUIREMENTS.

NO.	DATE	REVISIONS
.	.	.

STEVEN M. BALDRIDGE, LICENSED PROFESSIONAL ENGINEER, No. 7679-S, U.S.A.

THIS WORK WAS PREPARED BY ME OR UNDER MY SUPERVISION AND CONSTRUCTION OBSERVATION WILL BE UNDER MY OBSERVATION, CHAPTER 16/15, DEPARTMENT OF COMMERCE AND CONSUMER AFFAIRS

EXP. April 30, 2014

FOR BALDRIDGE & ASSOCIATES STRUCTURAL ENGINEERING, INC.

KAKAAKO WORKFORCE HOUSING PER SUBCHAPTER 4 OF 2011 MAUKA PLAN AND RULES

801 SOUTH STREET HONOLULU, HAWAII

GENERAL NOTES

KAZU YATO, AIA & ASSOCIATES,INC.
2033 ROUNDTOP TERRACE HONOLULU, HI 96822
TEL: (808) 845–0040 FAX: (808) 845–0641

DATE	DRAWN	CHECK	FILE
11/08/12	TD	SB	

SHEET

S-0.2

PRE–ENGINEERED STAIRS:

1. FINAL DESIGN OF ALL STAIR LANDINGS, STRINGERS, PLATES, HANGERS AND CONNECTIONS SHALL BE PER PRE–ENGINEERED STAIR CONTRACTOR. DESIGN MEMBERS TO WITHSTAND DEAD LOAD, LIVE LOADS, AND SEISMIC LOADS CALCULATED IN ACCORDANCE WITH APPLICABLE CODE AND IN CONFORMANCE WITH THE DRAWINGS AND RELATED SPECIFICATION SECTIONS.
2. DESIGN MEMBERS AND PERFORM SHOP WORK IN ACCORDANCE WITH AISC "SPECIFICATION FOR STRUCTURAL STEEL BUILDINGS – LOAD & RESISTANCE FACTOR DESIGN".
3. SUBMIT SHOP DRAWINGS AND CALCULATIONS TO ARCHITECT FOR REVIEW BEFORE BEGINNING FABRICATION OR DELIVERY OF MATERIALS TO BUILDING SITE.
   CONTRACTOR TO SUBMIT TWO SETS OF FABRICATION DRAWINGS AND STRUCTURAL CALCULATIONS TO THE ARCHITECT FOR REVIEW AND APPROVAL BEFORE INSTALLATION.
   A. PRODUCT DATA: PROVIDE DATA ON PROFILES, COMPONENT DIMENSIONS, FASTENERS.
   B. SHOP DRAWINGS: INDICATE ASSEMBLY DIMENSIONS, LOCATIONS OF STRUCTURAL MEMBERS, CONNECTIONS, GENERAL CONSTRUCTION DETAILS, ANCHORAGES AND METHOD OF ANCHORAGE.
   C. PROVIDE CALCULATIONS SIGNED AND SEALED BY A QUALIFIED STRUCTURAL ENGINEER LICENSED IN THE STATE OF HAWAII.

SPECIAL INSPECTION REQUIREMENTS:

1. IN ADDITION TO THE INSPECTION PROCEDURES AND REQUIREMENTS SPECIFIED BY [IBC 2003 SECTION 109] THE OWNER OR THE OWNER'S AGENT SHALL EMPLOY ONE OR MORE ICC CERTIFIED SPECIAL INSPECTORS, AS REQUIRED BY AND ACCEPTABLE TO THE BUILDING DEPARTMENT, WHO SHALL PROVIDE INSPECTIONS (IN ACCORDANCE WITH SECTION 1704) DURING CONSTRUCTION OF THE FOLLOWING TYPES OF WORK:
   A. CONCRETE
   B. EPOXY DOWELS AND ANCHORS
   C. BOLTS INSTALLED IN CONCRETE
   D. REINFORCING STEEL AND PRESTRESSING STEEL TENDONS
   E. STRUCTURAL WELDING AND HIGH STRENGTH BOLTING
   F. STRUCTURAL MASONRY
2. REPORTS: SPECIAL INSPECTOR SHALL FURNISH SIGNED TESTING AND INSPECTION REPORTS WITH ICC NUMBERS ON A WEEKLY BASIS TO THE OWNER, ARCHITECT AND CONTRACTOR INDICATING THE WORK INSPECTED. DISCREPANCIES SHALL BE BROUGHT TO THE IMMEDIATE ATTENTION OF THE CONTRACTOR FOR CORRECTION, THEN, IF UNCORRECTED TO THE ARCHITECT AND BUILDING OFFICIAL.
3. FINAL REPORT: SPECIAL INSPECTOR SHALL SUBMIT A FINAL REPORT STATING WHETHER THE WORK REQUIRING SPECIAL INSPECTION WAS, TO THE BEST OF THE INSPECTOR'S KNOWLEDGE, IN CONFORMANCE TO THE CONSTRUCTION DOCUMENTS AND THE APPLICABLE PROVISIONS OF THE BUILDING CODE.
4. CONTRACTOR SHALL PROVIDE TWO WEEK SCHEDULE OF ANTICIPATED WORK REQUIRING SPECIAL INSPECTION. IT SHALL BE THE DUTY OF THE PERSON DOING THE WORK AUTHORIZED BY A PERMIT TO NOTIFY THE SPECIAL INSPECTOR THAT SUCH WORK IS READY FOR INSPECTION. INSPECTION REQUESTS SHALL BE IN WRITING AND FILED AT LEAST TWO WORKING DAYS BEFORE SUCH INSPECTION IS DESIRED.
5. IT SHALL BE THE DUTY OF THE CONTRACTOR TO CAUSE THE WORK TO REMAIN ACCESSIBLE AND EXPOSED FOR INSPECTION PURPOSES. NEITHER THE SPECIAL INSPECTOR NOT THE OWNER SHALL BE LIABLE FOR EXPENSES ENTAILED IN THE REMOVAL OR REPLACEMENT OF ANY MATERIAL REQUIRED TO ALLOW INSPECTION.
6. THE SPECIAL INSPECTOR SHALL NOT BE RESPONSIBLE FOR THE MEANS, METHODS, TECHNIQUES, SEQUENCES, OR PROCEDURES OF CONSTRUCTION SELECTED BY THE CONTRACTOR OR SAFETY PRECAUTIONS AND PROGRAMS INCIDENT TO THE WORK OF THE CONTRACTOR.
7. WHILE THE SPECIAL INSPECTOR'S EFFORTS ARE INTENDED TO PROVIDE A GREATER DEGREE OF CONFIDENCE FOR THE OWNER AND THE BUILDING OFFICIAL THAT THE COMPLETED WORK OF THE CONTRACTOR WILL CONFORM TO THE CONTRACT DOCUMENTS, THEY ARE NOT INTENDED TO SUPPLANT OR SUPPLEMENT THE CONTRACTOR'S RESPONSIBILITIES FOR THE CONSTRUCTION OF THE PROJECT.
8. THE CONTRACTOR SHALL BE SOLELY RESPONSIBLE FOR FINAL QUALITY CONTROL REVIEW OF WORK TO ENSURE THAT ITEMS OBSERVED BY THE SPECIAL INSPECTOR HAVE NOT BEEN MOVED, REMOVED, DISPLACED OR DISLODGED BY THE NUMEROUS SUBCONTRACTORS WORKING ON THE SITE BETWEEN INSPECTION AND COMPLETION OF WORK.
9. CONTRACTOR SHALL REIMBURSE OWNER FOR COSTS RELATED TO TESTS AND INSPECTIONS OF WORK OR MATERIAL REPLACING NON–CONFORMING WORK OR MATERIALS.
10. THE SPECIAL INSPECTION FINAL REPORT DOCUMENTS THE REQUIRED SPECIAL INSPECTIONS AND CORRECTION OF DISCREPANCIES NOTED IN THE INSPECTIONS. IT IS NOT A GUARANTEE OR WARRANTY THAT THE FINAL CONSTRUCTION IS IN COMPLETE CONFORMANCE WITH THE CONSTRUCTION DOCUMENTS, NOR THE WORKMANSHIP PROVISIONS OF THE BUILDING CODE.
11. ACCEPTANCE AS A RESULT OF AN INSPECTION SHALL NOT BE CONSTRUED TO BE AN ACCEPTANCE OF A VIOLATION OF THE BUILDING CODE PROVISIONS OR OF OTHER ORDINANCES OF THE JURISDICTION. INSPECTION PRESUMING TO GIVE AUTHORITY TO VIOLATE OR CANCEL THE PROVISIONS OF THE BUILDING CODE OR OF OTHER ORDINANCES OF THE JURISDICTION SHALL NOT BE VALID.
12. SUBSTITUTION AS A RESULT OF AN INSPECTION SHALL NOT BE ALLOWED. INSPECTIONS PRESUMING TO GIVE AUTHORITY TO CHANGE THE PROVISIONS OF THE CONTRACT DOCUMENTS SHALL BE SUBMITTED BY THE CONTRACTOR AS A SUBSTITUTION REQUEST FOR REVIEW BY THE ARCHITECT PRIOR TO COMPLETION OF WORK.
13. THE CONTRACTOR SHALL BE SOLELY RESPONSIBLE FOR THE QUALITY OF WORK AND COMPLIANCE WITH CONSTRUCTION DOCUMENTS. THE SPECIAL INSPECTIONS DO NOT CONSTITUTE REPLACEMENT OF THEIR REQUIRED QUALITY CONTROL OR APPROVAL OF THEIR WORK. THE OWNER, SPECIAL INSPECTOR AND ENGINEER OF RECORD SHALL NOT BE LIABLE FOR ANY EXPENSES ENTAILED IN NON–CONFORMING WORK THAT MAY OR MAY NOT BE IDENTIFIED IN THE SPECIAL INSPECTION PROCESS.
14. FIELD OBSERVATIONS BY S.E.R. ARE PERFORMED SOLELY FOR DETERMINING IF CONTRACTOR IS PERFORMING WORK IN GENERAL CONFORMANCE WITH THE DESIGN INTENT CONVEYED IN CONTRACT DOCUMENTS. OBSERVATIONS DO NOT GUARANTEE CONTRACTOR'S PERFORMANCE AND SHALL NOT BE CONSTRUED AS SPECIAL INSPECTION OR SUPERVISION OF CONSTRUCTION.

STRUCTURAL ABBREVIATIONS:

A.B.	ANCHOR BOLT
ACI	AMERICAN CONCRETE INSTITUTE
ADD'L.	ADDITIONAL
A.F.F.	ABOVE FINISH FLOOR
ALT.	ALTERNATE
APPROX.	APPROXIMATE
ARCH.	ARCHITECTURAL
BM.	BEAM
BOT., B	BOTTOM
BRG.	BEARING
B.S.	BOTH SIDES
C.I.P.	CAST–IN–PLACE
C.J.	CONSTRUCTION OR CONTROL JOINT
℄	CENTER LINE
CLR.	CLEAR (ANCE)
C.M.U.	CONCRETE MASONRY UNIT
C.O.G.	CENTER OF GRAVITY
COL.	COLUMN
CONC.	CONCRETE
CONN.	CONNECTION
C.P.	COMPLETE PENETRATION
CONSTR.	CONSTRUCTION
CONT.	CONTINUOUS
DBA	DEFORMED BAR ANCHOR
DBL.	DOUBLE
DET.	DETAIL
DIA.	DIAMETER
DIM.	DIMENSION
DIST.	DISTANCE
D.L.	DEAD LOAD
DWG.	DRAWING
(E)	EXISTING
EA.	EACH
E.F.	EACH FACE
E.J.	EXPANSION JOINT
EL., ELEV.	ELEVATION
ELEC.	ELECTRICAL
EQ.	EQUAL
E.S.	EACH SIDE
E.W.	EACH WAY
EXT.	EXTERIOR
FD.	FLOOR DRAIN
FF	FAR FACE
FFE	FINISH FLOOR ELEVATION
FL.	FLOOR
FIN.	FINISH
FIN. FL.	FINISH FLOOR
F.S.	FAR SIDE
FT.	FOOT OR FEET
FTG.	FOOTING
GA.	GAUGE
GALV.	GALVANIZED
G.B.	GRADE BEAM
GEOTECH.	GEOTECHNICAL
HAS	HEADED ANCHOR STUD
HORIZ., (H)	HORIZONTAL, HORIZONTALLY
H.P.	HIGH POINT
HSS	HOLLOW STRUCTURAL SECTION
I.F.	INSIDE FACE
INFO.	INFORMATION
INTERM.	INTERMEDIATE
JT.	JOINT
L	ANGLE
LG	LONG
L.L.	LIVE LOAD
L.L.	LIVE LOAD
LLH	LONG LEG HORIZONTAL
LLV	LONG LEG VERTICAL
LONGIT.	LONGITUDINAL
L.P.	LOW POINT
MAX.	MAXIMUM
MECH.	MECHANICAL
MANUF., MFR.	MANUFACTURER
MIN.	MINIMUM
MISC.	MISCELLANEOUS
(N)	NEW
NF	NEAR FACE
N.I.C.	NOT IN CONTRACT
N.S.	NEAR SIDE
No.	NUMBER
N.T.S.	NOT TO SCALE
O.C.	ON CENTER
O.F.	OUTSIDE FACE
OPP.	OPPOSITE
O.H.	OPPOSITE HAND
OPNG.	OPENING
PEJ.	PREMOLDED EXPANSION JOINT
PERP.	PERPENDICULAR
P.J.	PANEL JOINT
PL., ℙ	PLATE
PREP.	PREPERATION
RAD.	RADIUS
REF.	REFERENCE
REINF.	REINFORCEMENT, REINFORCING
REQ'D.	REQUIRED
SCHED.	SCHEDULE
SEC., SECT.	SECTION
S.E.R.	STRUCTURAL ENGINEER OF RECORD
SHT.	SHEET
SIM.	SIMILAR
S.O.G.	SLAB–ON–GRADE
SP.	SPACING
SPECS.	SPECIFICATIONS
SQ.	SQUARE
STD.	STANDARD
STIFF.	STIFFENER
STRUCT.	STRUCTURAL
T	TOP
TEMP.	TEMPERATURE STEEL
THRU	THROUGH
T.O.C.	TOP OF CONCRETE
T.O.F	TOP OF FOOTING
T.O.S.	TOP OF SLAB, TOP OF STEEL
TYP.	TYPICAL
U.N.O.	UNLESS NOTED OTHERWISE
V.I.F.	VERIFY IN FIELD
VERT., (V)	VERTICAL
WASH.	WASHER
W.P.	WORK POINT
W.W.R.	WELDED WIRE REINFORCEMENT
WF	WIDE FLANGE
W/	WITH

REVISIONS

NO.	DATE	
.	.	.

STEVEN M. BALDRIDGE LICENSED PROFESSIONAL ENGINEER No. 7675-S HAWAII, U.S.A.

THIS WORK WAS PREPARED BY ME OR UNDER MY SUPERVISION AND CONSTRUCTION OF THIS PROJECT WILL BE UNDER MY OBSERVATION, CHAPTER 16-115, DEPARTMENT OF COMMERCE AND CONSUMER AFFAIRS

EXP. April 30, 2014

FOR BALDRIDGE & ASSOCIATES
STRUCTURAL ENGINEERING, INC.

KAKAAKO WORKFORCE HOUSING PER
SUBCHAPTER 4 OF 2011 MAUKA PLAN AND RULES
801 SOUTH STREET
HONOLULU, HAWAII

GENERAL NOTES

KAZU YATO, AIA & ASSOCIATES, INC.
2333 ROUNDTOP TERRACE
HONOLULU, HI 96822
TEL: (808) 945-0040
FAX: (866) 946-0041

DATE	DRAWN	CHECK	FILE
11/08/12	TD	SB	

SHEET

S-0.3

NOTES:

(1) – ALL LAPS ARE TYPICAL TENSION LAP SPLICES UNLESS NOTED AS COMPRESSION ("l_{sc}") ON PLANS OR DETAILS.

(2) – IF CONCRETE COVER IS NOT GREATER THAN THE DIAMETER OF THE BAR OR THE CENTER TO CENTER SPACING IS NOT GREATER THAN (3) BAR DIAMETERS, THEN VALUES SHALL BE INCREASED BY 50%.

(3) – "TOP BARS" ARE HORIZONTAL BARS WITH MORE THAN 12" DEPTH OF CONCRETE CAST BELOW THEM.

(4) – IF CONCRETE COVER IS NOT GREATER THAN 2 1/2" AND THE END COVER OF HOOK IS NOT GREATER THAN 2", THEN VALUES SHALL BE INCREASED BY 43%.

(5) – NON-CONTACT SPLICES ARE NOT ALLOWED.

REINFORCEMENT SPLICE SCHEDULE (1)
(FOR GRADE 60, UNCOATED BARS & NORMAL WEIGHT CONCRETE), in

BAR SIZE	MINIMUM TENSION LAP SPLICE LENGTHS ("l_d") (2), (5)						MINIMUM EMBEDMENT LENGTHS FOR STANDARD END HOOKS ("l_{dh}") (4)		MINIMUM LAP SPLICE LENGTHS FOR BARS IN COMPRESSION ("l_{sc}") (2)	MINIMUM STRAIGHT DEVELOPMENT LENGTH ("l_{dc}") FOR BARS IN COMPRESSION
	f'c = 3 ksi		f'c = 4 ksi		f'c = 5 ksi		f'c = 3 ksi	f'c ≥ 4 ksi	f'c ≥ 3 ksi	f'c ≥ 3 ksi
	TOP BARS (3)	OTHER BARS	TOP BARS (3)	OTHER BARS	TOP BARS (3)	OTHER BARS				
#3	29	22	26	20	22	17	6	6	12	9
#4	38	29	32	25	29	22	8	7	15	11
#5	47	36	40	31	36	28	10	9	19	14
#6	56	43	49	38	43	33	12	10	23	17
#7	82	62	71	54	63	49	14	12	26	20
#8	94	71	82	62	72	55	16	14	30	22
#9	105	81	91	70	81	63	18	15	34	25
#10	117	91	102	78	91	70	20	17	38	28
#11	130	101	114	86	102	78	22	19	42	31

1 S-0.4 REINFORCEMENT SPLICE SCHEDULE

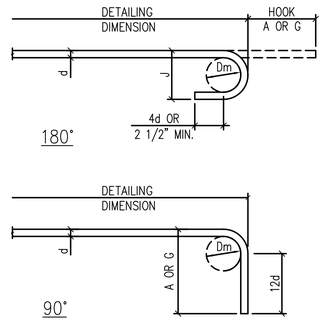

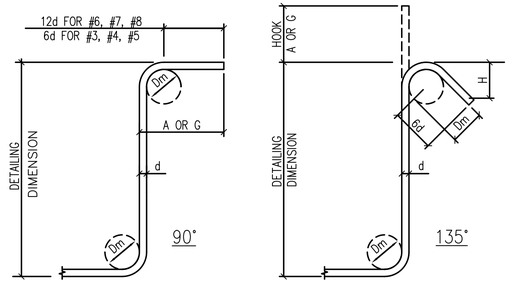

BAR SIZE	Dm	180° HOOKS		90° HOOKS
		A OR G	J	A OR G
#3	2-1/4	5	3	6
#4	3	6	4	8
#5	3-3/4	7	5	10
#6	4-1/2	8	6	12
#7	5-1/4	10	7	14
#8	6	11	8	16
#9	9-1/2	15	11-3/4	19
#10	10-3/4	17	13-1/4	22
#11	12	19	12-3/4	24

2 S-0.4 STANDARD HOOK DIMENSIONS

STIRRUPS (TIES SIMILAR)
STIRRUP AND TIE HOOK DIMENSIONS
ALL GRADES, in

BAR SIZE	Dm	90° HOOKS	135° HOOKS	
		HOOK A OR G	HOOK A OR G	H APPROX.
#3	1-1/2	4	4	2-1/2
#4	2	4-1/2	4-1/2	3
#5	2-1/2	6	5-1/2	3-3/4
#6	4-1/2	12	8	4-1/2
#7	5-1/4	14	9	5-1/4
#8	6	16	10-1/2	6

3 S-0.4 STIRRUP AND TIE HOOK DIMENSIONS

REVISIONS

NO.	DATE	
.	.	.

STEVEN M. BALDRIDGE LICENSED PROFESSIONAL ENGINEER No. 7879-S HAWAII, U.S.A.

THIS WORK WAS PREPARED BY ME OR UNDER MY SUPERVISION AND CONSTRUCTION OF THIS PROJECT WILL BE UNDER MY OBSERVATION, CHAPTER 16-115, DEPARTMENT OF COMMERCE AND CONSUMER AFFAIRS
EXP. April 30, 2014

FOR BALDRIDGE & ASSOCIATES
STRUCTURAL ENGINEERING, INC.

KAKAAKO WORKFORCE HOUSING PER
SUBCHAPTER 4 OF 2011 MAUKA PLAN AND RULES
801 SOUTH STREET
HONOLULU, HAWAII

REINFORCEMENT SPLICE AND BAR BENDS

KAZU YATO, AIA & ASSOCIATES, INC.
2333 ROUNDTOP TERRACE
HONOLULU, HI 96822
TEL: (808) 943-0040
FAX: (808) 943-0041

DATE	DRAWN	CHECK	FILE
11/08/12	TD	SB	

SHEET

S-0.4

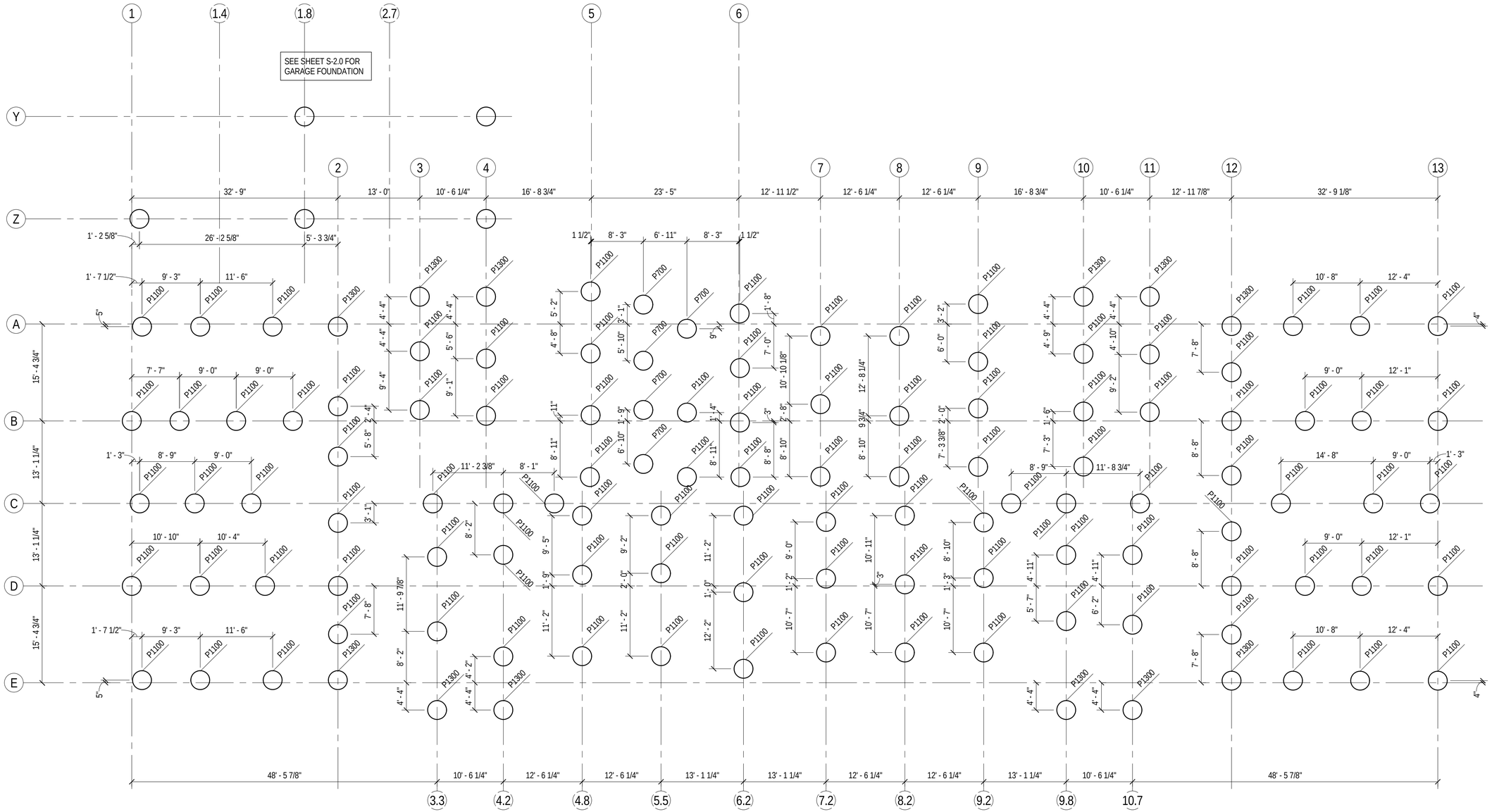

1
S-1.0

TOWER DRILLED PIER PLAN

SCALE: 1/8" = 1'-0"

PLAN NOTES:

1. VERIFY ALL DIMENSIONS WITH ARCHITECT.
2. CENTERLINE OF DRILLED PIER ARE ON GRIDLINES, U.N.O.
3. SEE SHEET SERIES S-0 FOR GENERAL NOTES AND DESIGN CRITERIA.
4. P1000 - INDICATES DRILLED PIER MARK.
   SEE 1/S-3.1 FOR DRILLED PIER SCHEDULE.
5. SEE SHEET SERIES S-3 FOR FOUNDATIONS DETAILS.
6. SEE SHEET S-1.1 FOR TOWER FOUNDATION PLAN.

NO.	DATE	REVISONS

STEVEN M. BALDRIDGE
LICENSED PROFESSIONAL ENGINEER
No. 7876-S
HAWAII, U.S.A.

THIS WORK WAS PREPARED BY ME OR UNDER MY SUPERVISION AND CONSTRUCTION OF THIS PROJECT WILL BE UNDER MY OBSERVATION. CHAPTER 16-115, DEPARTMENT OF COMMERCE AND CONSUMER AFFAIRS

EXP. APRIL 30, 2014

FOR BALDRIDGE & ASSOCIATES
STRUCTURAL ENGINEERING, INC.

KAKAAKO WORKFORCE HOUSING
PER SUBCHAPTER 4 OF 2011 MAUKA PLAN AND RULES

801 SOUTH STREET
HONOLULU, HAWAII

TOWER DRILLED PIER PLAN

KAZU YATO, AIA & ASSOCIATES, INC.
2033 ROUNDTOP TERRACE
HONOLULU, HI 96822
TEL: (808) 945-0040
FAX: (808) 945-0041

DATE	DRAWN	CHECK	FILE
11/08/12	TD	SB	

SHEET

S-1.0

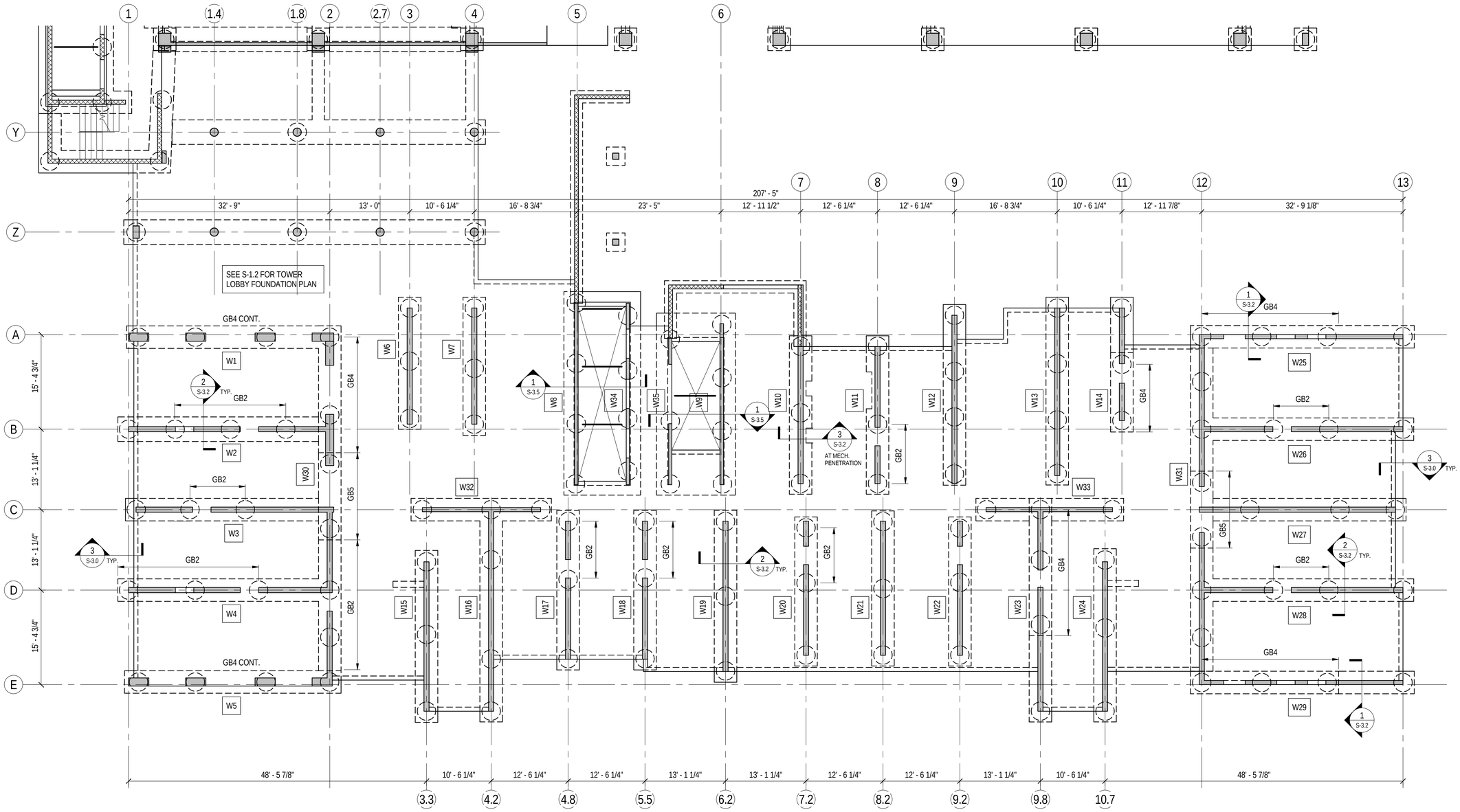

1 / S-1.1 **TOWER FOUNDATION PLAN**

SCALE: 1/8" = 1'-0"

FOUNDATION PLAN NOTES:

1. VERIFY ALL DIMENSIONS WITH ARCHITECTURAL DRAWINGS.
2. SEE ARCHITECTURAL DRAWINGS FOR FLOOR DRAINS, SLOPES, CURBS, FLOOR ELEVATIONS, AND NON-LOAD BEARING AND OTHER WALLS.
3. CENTERLINE OF COLUMNS AND WALLS ARE ON GRIDLINES U.N.O. SEE ARCHITECTURAL DRAWINGS FOR GRIDLINE & COLUMN OFFSET DIMENSIONS.
4. SEE SHEET SERIES S-0 FOR GENERAL NOTES AND DESIGN CRITERIA.
5. SEE SHEET SERIES S-3 FOR FOUNDATION DETAILS.
6. W1 - INDICATES WALL TYPE. SEE SHEET SERIES S-4 FOR TYPICAL TOWER WALL DETAILS AND REINFORCING.
7. SLAB-ON-GRADE SHALL BE 5" THICK REINFORCED WITH #4 @ 16" o.c. EACH WAY U.N.O. PREPARE SUBGRADE IN ACCORDANCE WITH GEOTECHNICAL ENGINEER'S RECOMMENDATIONS.
8. GB1 - INDICATES GRADE BEAM TYPE. SEE S-3.1 FOR GRADE BEAM SCHEDULE. ALL GRADE BEAMS ARE TYPE GB1 UNLESS NOTED OTHERWISE.

REVISONS

NO.	DATE

STEVEN M. BALDRIDGE — LICENSED PROFESSIONAL ENGINEER — No. 7876-S — U.S.A. — HAWAII

THIS WORK WAS PREPARED BY ME OR UNDER MY SUPERVISION AND CONSTITUTES THE EXTENT OF THE PROJECT WORK WHICH WAS DONE BY ME OR WILL BE UNDER MY OBSERVATION, AS REQUIRED BY CHAPTER 16-115, DEPARTMENT OF COMMERCE AND CONSUMER AFFAIRS

EXP. APRIL 30, 2014

FOR BALDRIDGE & ASSOCIATES
STRUCTURAL ENGINEERING, INC.

KAKAAKO WORKFORCE HOUSING

PER SUBCHAPTER 4 OF 2011 MAUKA PLAN AND RULES

801 SOUTH STREET
HONOLULU, HAWAII

TOWER FOUNDATION PLAN

KAZU YATO, AIA & ASSOCIATES, INC.
2033 ROUNDTOP TERRACE
HONOLULU, HI 96822
TEL: (808) 946-0040
FAX: (808) 942-0041

DATE	DRAWN	CHECK	FILE
11/08/12	TD	SB	

SHEET

S-1.1

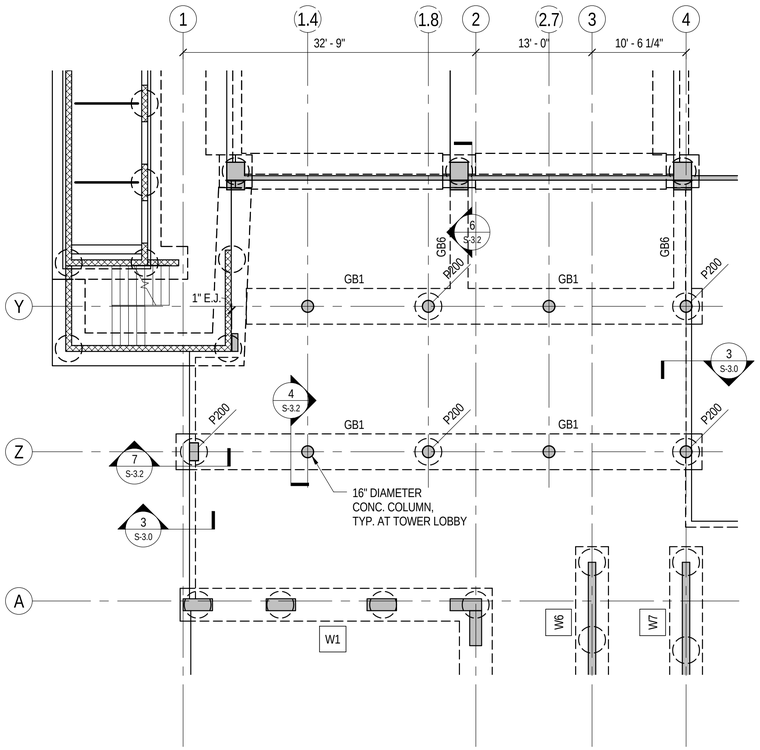

1 S-1.2 TOWER LOBBY FOUNDATION PLAN

SCALE: 1/8" = 1'-0"

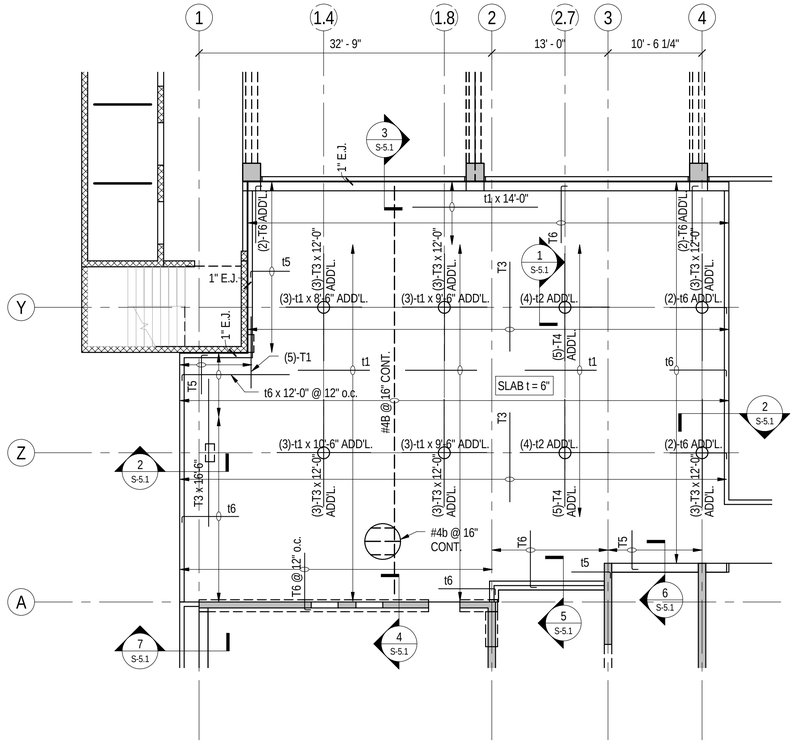

2 S-1.2 TOWER LOBBY ROOF FRAMING PLAN

SCALE: 1/8" = 1'-0"

FOUNDATION PLAN NOTES:

1. VERIFY ALL DIMENSIONS WITH ARCHITECTURAL DRAWINGS.
2. SEE ARCHITECTURAL DRAWINGS FOR FLOOR DRAINS, SLOPES, CURBS, FLOOR ELEVATIONS, AND NON-LOAD BEARING AND OTHER WALLS.
3. CENTERLINE OF COLUMNS AND WALLS ARE ON GRIDLINES U.N.O. SEE ARCHITECTURAL DRAWINGS FOR GRIDLINE & COLUMN OFFSET DIMENSIONS.
4. SEE SHEET SERIES S-0 FOR GENERAL NOTES AND DESIGN CRITERIA.
5. SEE SHEET SERIES S-3 FOR FOUNDATION DETAILS.
6. W1 - INDICATES WALL TYPE. SEE SHEET SERIES S-4 FOR TYPICAL TOWER WALL DETAILS AND REINFORCING.
7. SLAB-ON-GRADE SHALL BE 5" THICK REINFORCED WITH #4 @ 16" o.c. EACH WAY U.N.O. PREPARE SUBGRADE IN ACCORDANCE WITH GEOTECHNICAL ENGINEER'S RECOMMENDATIONS.
8. GB1 - INDICATES GRADE BEAM TYPE. SEE S-3.1 FOR GRADE BEAM SCHEDULE. ALL GRADE BEAMS ARE TYPE GB1 UNLESS NOTED OTHERWISE.

REVISIONS

NO.	DATE

STEVEN M. BALDRIDGE U.S.A. HAWAII LICENSED PROFESSIONAL ENGINEER No. 7876-S

THIS WORK WAS PREPARED BY ME OR UNDER MY SUPERVISION AND CONTROL THAT THE DOCUMENT WILL BE UNDER MY OBSERVATION. CHAPTER 16-115, DEPARTMENT OF COMMERCE AND CONSUMER AFFAIRS

EXP. APRIL 30, 2014

FOR BALDRIDGE & ASSOCIATES STRUCTURAL ENGINEERING, INC.

KAKAAKO WORKFORCE HOUSING
PER SUBCHAPTER 4 OF 2011 MAUKA PLAN AND RULES

801 SOUTH STREET
HONOLULU, HAWAII

TOWER LOBBY FLOOR & ROOF FRAMING PLAN

KAZU YATO, AIA & ASSOCIATES,INC.
2033 ROUNDTOP TERRACE
HONOLULU, HI 96822
TEL: (808) 945-0045
FAX: (808) 945-0041

DATE 11/08/12 | DRAWN TD | CHECK SB | FILE

SHEET

S-1.2

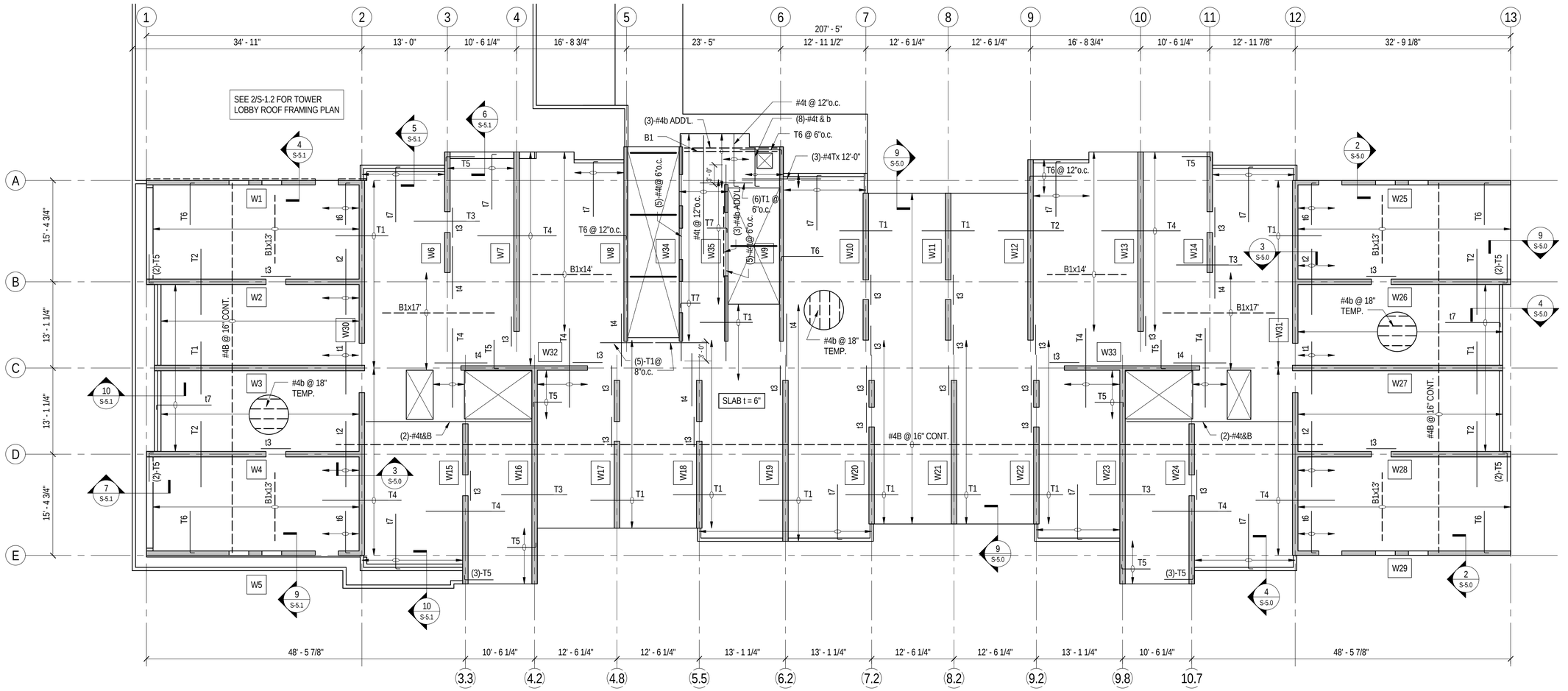

FLOOR SLAB REBAR SCHEDULE		
MARK	REINFORCING	COMMENTS
T1, t1	#4 x 8'-0" @ 16" o.c. (U.N.O.)	-
T2, t2	#4 x 10'-0" @ 12" o.c. (U.N.O.)	-
T3	#4 x 10'-0" @ 16" o.c.	-
t3	(5) - #4 x 6'-0" @ 9" o.c.	-
T4	#4 x 12'-0" @ 12" o.c. (U.N.O.)	-
t4	(6) - #4 x 8'-0" @ 6" o.c.	-
T5, t5	#4 x 4'-4" @ 16" o.c.	-
T6, t6	#4 x 6'-4" @ 16" o.c. (U.N.O.)	-
T7	#4 x 3'-0" @ 16" o.c.	-
t7	#4 x 8'-4" @ 16" o.c.	TYP. AT LANAI
B1	#4 @ 32" o.c. ADD'L. SHORT BOTTOM BARS	PLACE MIDWAY BETWEEN CONT. "B" STEEL

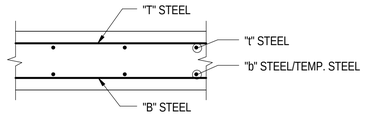

SLAB BAR PLACEMENT DIAGRAM

1 / S-1.3 TOWER 2nd FLOOR FRAMING PLAN

SCALE: 1/8" = 1'-0"

FLOOR FRAMING PLAN NOTES:

1. VERIFY ALL DIMENSIONS WITH ARCHITECTURAL DRAWINGS.
2. SEE ARCHITECTURAL DRAWINGS FOR FLOOR DRAINS, SLOPES, CURBS, FLOOR ELEVATIONS, AND NON-LOAD BEARING AND OTHER WALLS.
3. CENTERLINE OF COLUMNS AND WALLS ARE ON GRIDLINES U.N.O. SEE ARCHITECTURAL DRAWINGS FOR GRIDLINE & COLUMN OFFSET DIMENSIONS.
4. SEE SHEET SERIES S-0 FOR GENERAL NOTES AND DESIGN CRITERIA.
5. W1 - INDICATES WALL TYPE. SEE SHEET SERIES S-4 FOR TYPICAL TOWER WALL DETAILS AND REINFORCING.
6. SEE SHEET SERIES S-5 FOR TYPICAL TOWER SLAB AND FRAMING DETAILS.

REVISONS

NO.	DATE	

STEVEN M. BALDRIDGE LICENSED PROFESSIONAL ENGINEER No. 7876-S HAWAII, U.S.A.

THIS WORK WAS PREPARED BY ME OR UNDER MY SUPERVISION AND CONSTRUCTION OF THIS PROJECT WILL BE UNDER MY OBSERVATION. CHAPTER 16-115, DEPARTMENT OF COMMERCE AND CONSUMER AFFAIRS

EXP. APRIL 30, 2014

FOR BALDRIDGE & ASSOCIATES STRUCTURAL ENGINEERING, INC.

KAKAAKO WORKFORCE HOUSING
PER SUBCHAPTER 4 OF 2011 MAUKA PLAN AND RULES
801 SOUTH STREET
HONOLULU, HAWAII

TOWER 2ND FLOOR FRAMING PLAN

KAZU YATO, AIA & ASSOCIATES, INC.
2033 ROUNDTOP TERRACE
HONOLULU, HI 96822
TEL: (808) 945-0040
FAX: (808) 945-0041

DATE	DRAWN	CHECK	FILE
11/08/12	TD	SB	

SHEET

S-1.3

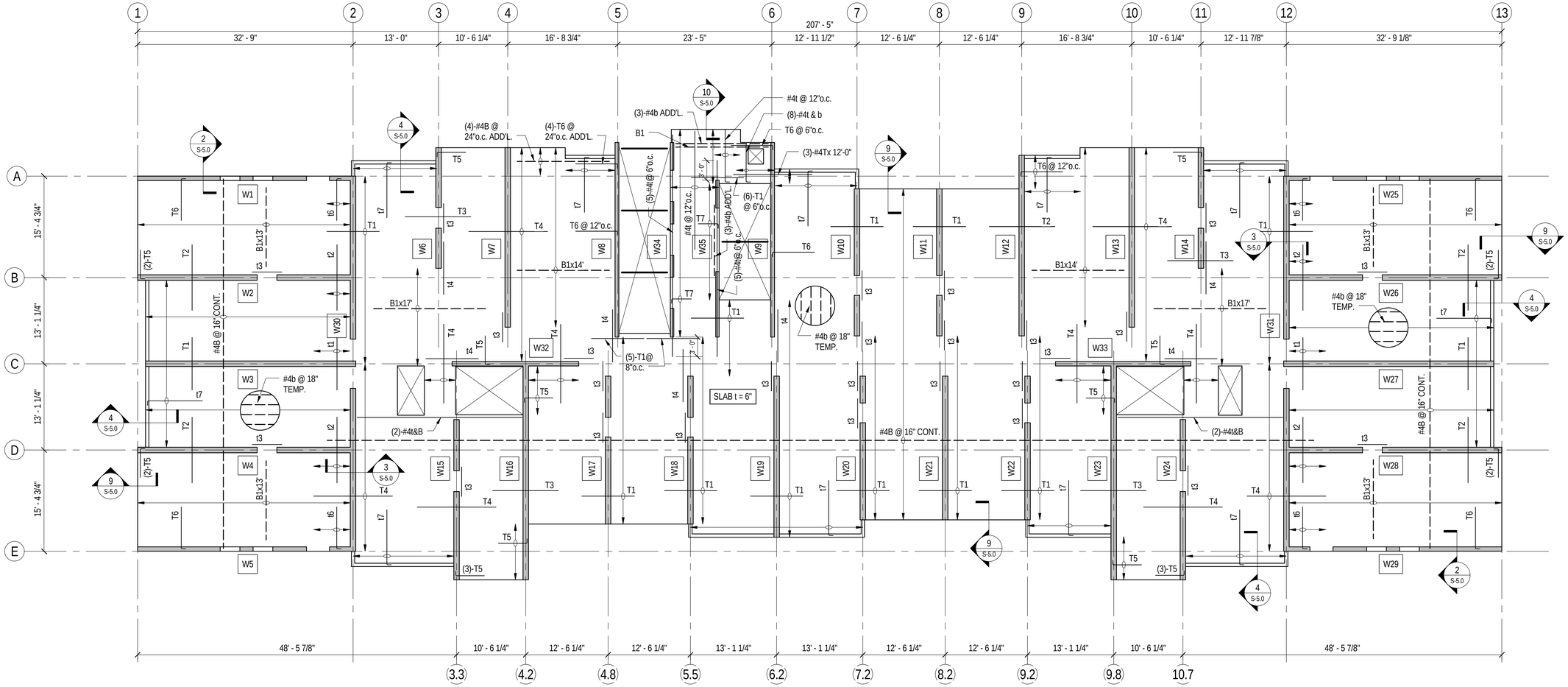

FLOOR SLAB REBAR SCHEDULE

MARK	REINFORCING	COMMENTS
T1, t1	#4 x 8'-0" @ 16" o.c. (U.N.O.)	-
T2, t2	#4 x 10'-0" @ 12" o.c. (U.N.O.)	-
T3	#4 x 10'-0" @ 16" o.c.	-
t3	(5) - #4 x 6'-0" @ 9" o.c.	-
T4	#4 x 12'-0" @ 12" o.c. (U.N.O.)	-
t4	(6) - #4 x 8'-0" @ 6" o.c.	-
T5, t5	#4 x 4'-4" @ 16" o.c.	-
T6, t6	#4 x 6'-4" @ 16" o.c. (U.N.O.)	-
T7	#4 x 3'-0" @ 16" o.c.	-
t7	#4 x 8'-4" @ 16" o.c.	TYP. AT LANAI
B1	#4 @ 32" o.c. ADD'L. SHORT BOTTOM BARS	PLACE MIDWAY BETWEEN CONT. "B" STEEL

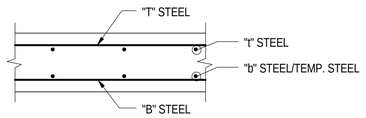

SLAB BAR PLACEMENT DIAGRAM

1 / S-1.4 TOWER 3rd-8th, FLOOR FRAMING PLAN

SCALE: 1/8" = 1'-0"

N

FLOOR FRAMING PLAN NOTES:

1. VERIFY ALL DIMENSIONS WITH ARCHITECTURAL DRAWINGS.
2. SEE ARCHITECTURAL DRAWINGS FOR FLOOR DRAINS, SLOPES, CURBS, FLOOR ELEVATIONS, AND NON-LOAD BEARING AND OTHER WALLS.
3. CENTERLINE OF COLUMNS AND WALLS ARE ON GRIDLINES U.N.O. SEE ARCHITECTURAL DRAWINGS FOR GRIDLINE & COLUMN OFFSET DIMENSIONS.
4. SEE SHEET SERIES S-0 FOR GENERAL NOTES AND DESIGN CRITERIA.
5. W1 - INDICATES WALL TYPE. SEE SHEET SERIES S-4 FOR TYPICAL TOWER WALL DETAILS AND REINFORCING.
6. SEE SHEET SERIES S-5 FOR TYPICAL TOWER SLAB AND FRAMING DETAILS.

NO.	DATE	REVISONS

STEVEN M. BALDRIDGE ★ U.S.A. ★ HAWAII — LICENSED PROFESSIONAL ENGINEER — No. 7874-S

THIS WORK WAS PREPARED BY ME OR UNDER MY SUPERVISION AND CONTROL TO THE BEST OF MY KNOWLEDGE AND WILL BE UNDER MY OBSERVATION. CHAPTER 16-115, DEPARTMENT OF COMMERCE AND CONSUMER AFFAIRS

EXP. APRIL 30, 2014

FOR BALDRIDGE & ASSOCIATES STRUCTURAL ENGINEERING, INC.

KAKAAKO WORKFORCE HOUSING

PER SUBCHAPTER 4 OF 2011 MAUKA PLAN AND RULES

801 SOUTH STREET
HONOLULU, HAWAII

TOWER 3RD-8TH FLOOR FRAMING PLAN

KAZU YATO, AIA & ASSOCIATES, INC.

2033 ROUNTOP TERRACE
HONOLULU, HI 96822

TEL: (808) 945-0503
FAX: (808) 945-5041

DATE	DRAWN	CHECK	FILE
11/08/12	TD	SB	

SHEET

S-1.4

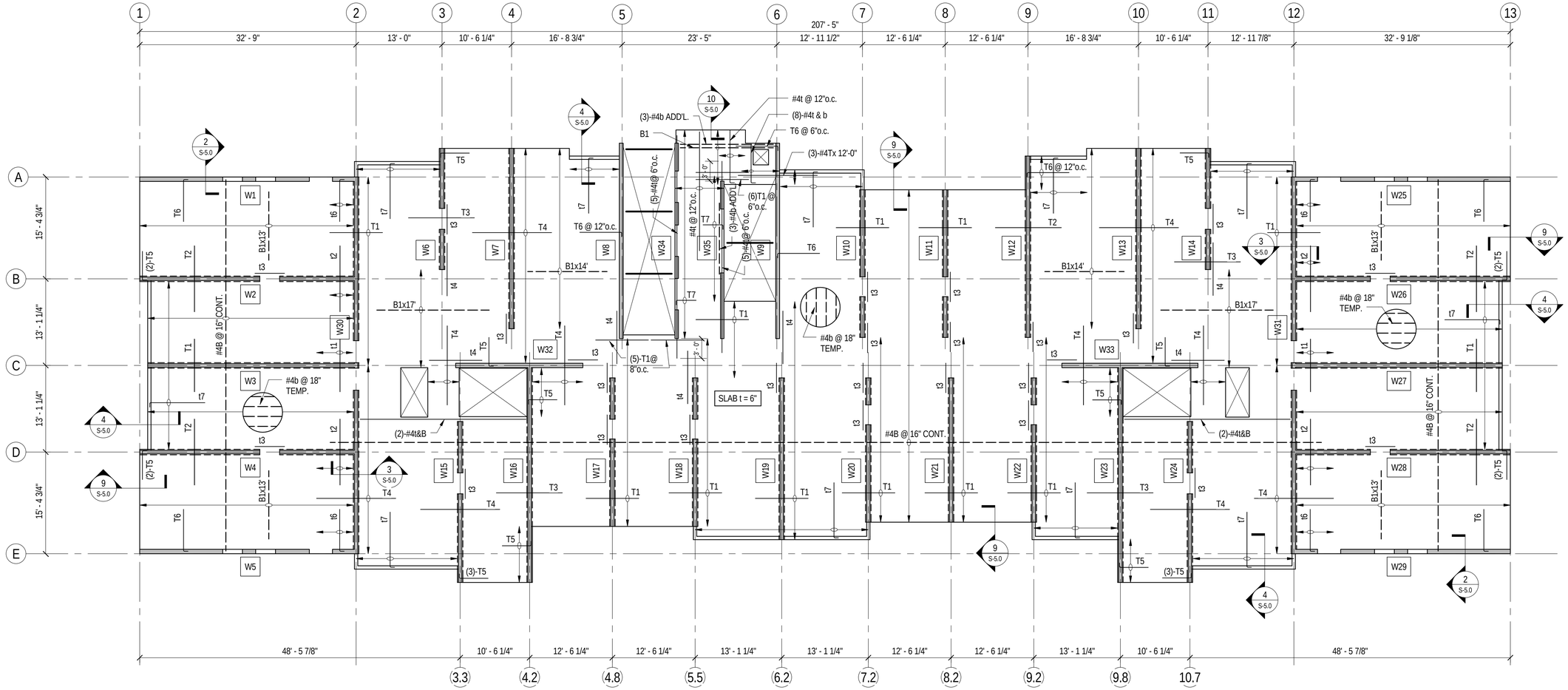

FLOOR SLAB REBAR SCHEDULE

MARK	REINFORCING	COMMENTS
T1, t1	#4 x 8'-0" @ 16" o.c. (U.N.O.)	-
T2, t2	#4 x 10'-0" @ 12" o.c. (U.N.O.)	-
T3	#4 x 10'-0" @ 16" o.c.	-
t3	(5) - #4 x 6'-0" @ 9" o.c.	-
T4	#4 x 12'-0" @ 12" o.c. (U.N.O.)	-
t4	(6) - #4 x 8'-0" @ 6" o.c.	-
T5, t5	#4 x 4'-4" @ 16" o.c.	-
T6, t6	#4 x 6'-4" @ 16" o.c. (U.N.O.)	-
T7	#4 x 3'-0" @ 16" o.c.	-
t7	#4 x 8'-4" @ 16" o.c.	TYP. AT LANAI
B1	#4 @ 32" o.c. ADD'L. SHORT BOTTOM BARS	PLACE MIDWAY BETWEEN CONT. "B" STEEL

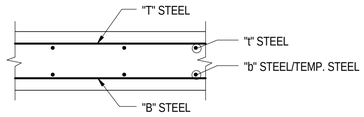

SLAB BAR PLACEMENT DIAGRAM

1 / S-1.5 TOWER 9th FLOOR FRAMING PLAN

SCALE: 1/8" = 1'-0"

N

FLOOR FRAMING PLAN NOTES:

1. VERIFY ALL DIMENSIONS WITH ARCHITECTURAL DRAWINGS.
2. SEE ARCHITECTURAL DRAWINGS FOR FLOOR DRAINS, SLOPES, CURBS, FLOOR ELEVATIONS, AND NON-LOAD BEARING AND OTHER WALLS.
3. CENTERLINE OF COLUMNS AND WALLS ARE ON GRIDLINES U.N.O. SEE ARCHITECTURAL DRAWINGS FOR GRIDLINE & COLUMN OFFSET DIMENSIONS.
4. SEE SHEET SERIES S-0 FOR GENERAL NOTES AND DESIGN CRITERIA.
5. W1 - INDICATES WALL TYPE. SEE SHEET SERIES S-4 FOR TYPICAL TOWER WALL DETAILS AND REINFORCING.
6. SEE SHEET SERIES S-5 FOR TYPICAL TOWER SLAB AND FRAMING DETAILS.

NO.	DATE	REVISONS

STEVEN M. BALDRIDGE * LICENSED PROFESSIONAL ENGINEER * No. 7874-S * HAWAII, U.S.A.

THIS WORK WAS PREPARED BY ME OR UNDER MY SUPERVISION AND CONTROL FOR THIS PROJECT AND WILL BE UNDER MY OBSERVATION. CHAPTER 16-115, DEPARTMENT OF COMMERCE AND CONSUMER AFFAIRS

EXP. APRIL 30, 2014

FOR BALDRIDGE & ASSOCIATES STRUCTURAL ENGINEERING, INC.

KAKAAKO WORKFORCE HOUSING
PER SUBCHAPTER 4 OF 2011 MAUKA PLAN AND RULES
801 SOUTH STREET
HONOLULU, HAWAII
TOWER 9TH FLOOR FRAMING PLAN

KAZU YATO, AIA & ASSOCIATES, INC.
2033 ROUNDTOP TERRACE
HONOLULU, HI 96822
TEL: (808) 945-0040
FAX: (808) 945-0041

DATE	DRAWN	CHECK	FILE
11/08/12	TD	SB	

SHEET

S-1.5

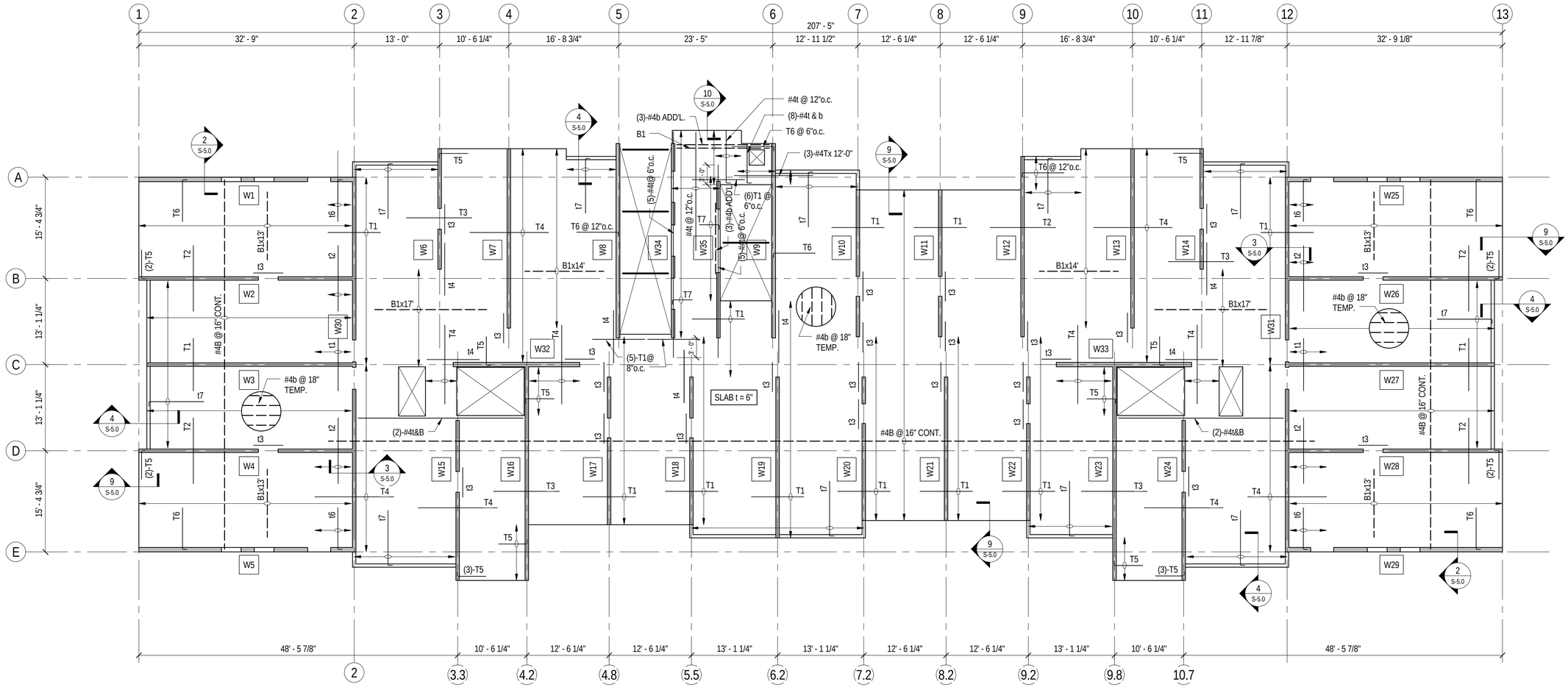

FLOOR SLAB REBAR SCHEDULE		
MARK	REINFORCING	COMMENTS
T1, t1	#4 x 8'-0" @ 16" o.c. (U.N.O.)	-
T2, t2	#4 x 10'-0" @ 12" o.c. (U.N.O.)	-
T3	#4 x 10'-0" @ 16" o.c.	-
t3	(5) - #4 x 6'-0" @ 9" o.c.	-
T4	#4 x 12'-0" @ 12" o.c. (U.N.O.)	-
t4	(6) - #4 x 8'-0" @ 6" o.c.	-
T5, t5	#4 x 4'-4" @ 16" o.c.	-
T6, t6	#4 x 6'-4" @ 16" o.c. (U.N.O.)	-
T7	#4 x 3'-0" @ 16" o.c.	-
t7	#4 x 8'-4" @ 16" o.c.	TYP. AT LANAI
B1	#4 @ 32" o.c. ADD'L. SHORT BOTTOM BARS	PLACE MIDWAY BETWEEN CONT. "B" STEEL

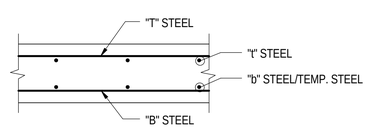

SLAB BAR PLACEMENT DIAGRAM

1 / S-1.6 TOWER 10th-15th, 20th-29th, & 34th-42ND FLOOR FRAMING PLAN

SCALE: 1/8" = 1'-0"

FLOOR FRAMING PLAN NOTES:

1. VERIFY ALL DIMENSIONS WITH ARCHITECTURAL DRAWINGS.
2. SEE ARCHITECTURAL DRAWINGS FOR FLOOR DRAINS, SLOPES, CURBS, FLOOR ELEVATIONS, AND NON-LOAD BEARING AND OTHER WALLS.
3. CENTERLINE OF COLUMNS AND WALLS ARE ON GRIDLINES U.N.O. SEE ARCHITECTURAL DRAWINGS FOR GRIDLINE & COLUMN OFFSET DIMENSIONS.
4. SEE SHEET SERIES S-0 FOR GENERAL NOTES AND DESIGN CRITERIA.
5. W1 - INDICATES WALL TYPE. SEE SHEET SERIES S-4 FOR TYPICAL TOWER WALL DETAILS AND REINFORCING.
6. SEE SHEET SERIES S-5 FOR TYPICAL TOWER SLAB AND FRAMING DETAILS.

REVISONS

NO.	DATE	

STEVEN M. BALDRIDGE LICENSED PROFESSIONAL ENGINEER No. 7876-S HAWAII, U.S.A.

THIS WORK WAS PREPARED BY ME OR UNDER MY SUPERVISION AND CONSTRUCTION OF THIS PROJECT WILL BE UNDER MY OBSERVATION. CHAPTER 16-115, DEPARTMENT OF COMMERCE AND CONSUMER AFFAIRS

EXP. APRIL 30, 2014

FOR BALDRIDGE & ASSOCIATES STRUCTURAL ENGINEERING, INC.

KAKAAKO WORKFORCE HOUSING
PER SUBCHAPTER 4 OF 2011 MAUKA PLAN AND RULES
801 SOUTH STREET
HONOLULU, HAWAII

TOWER 10TH-15TH, 20TH-29TH, & 34TH-42ND FLOOR FRAMING PLAN

KAZU YATO, AIA & ASSOCIATES, INC.
2033 ROUNDTOP TERRACE
HONOLULU, HI 96822
TEL: (808) 945-0040
FAX: (808) 945-0041

DATE	DRAWN	CHECK	FILE
11/08/12	TD	SB	

SHEET

S-1.6

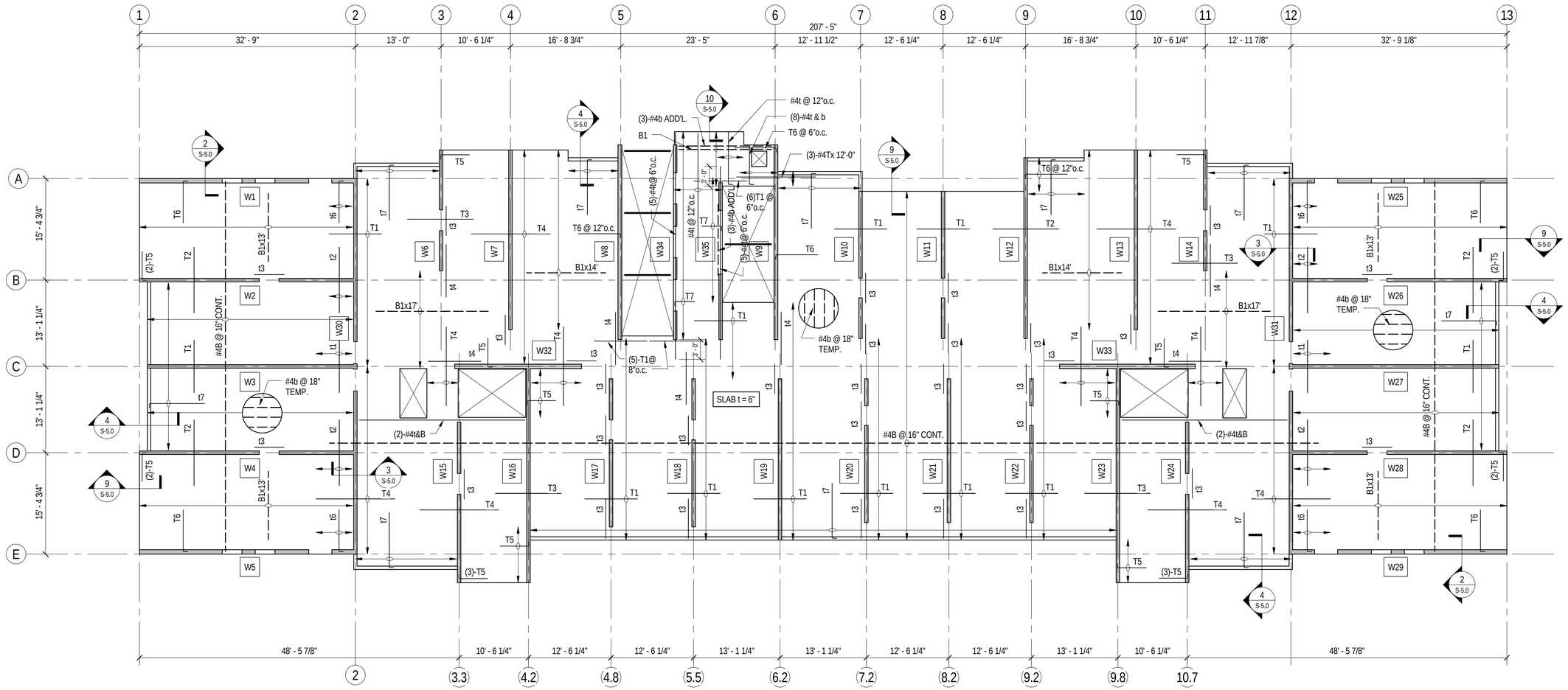

FLOOR SLAB REBAR SCHEDULE

MARK	REINFORCING	COMMENTS
T1, t1	#4 x 8'-0" @ 16" o.c. (U.N.O.)	-
T2, t2	#4 x 10'-0" @ 12" o.c. (U.N.O.)	-
T3	#4 x 10'-0" @ 16" o.c.	-
t3	(5) - #4 x 6'-0" @ 9" o.c.	-
T4	#4 x 12'-0" @ 12" o.c. (U.N.O.)	-
t4	(6) - #4 x 8'-0" @ 6" o.c.	-
T5, t5	#4 x 4'-4" @ 16" o.c.	-
T6, t6	#4 x 6'-4" @ 16" o.c. (U.N.O.)	-
T7	#4 x 3'-0" @ 16" o.c.	-
t7	#4 x 8'-4" @ 16" o.c.	TYP. AT LANAI
B1	#4 @ 32" o.c. ADD'L. SHORT BOTTOM BARS	PLACE MIDWAY BETWEEN CONT. "B" STEEL

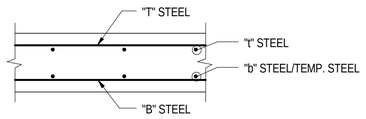

SLAB BAR PLACEMENT DIAGRAM

1 / S-1.7 TOWER 16th-19th, 30th-33rd, & 43rd-46th FLOOR FRAMING PLAN

SCALE: 1/8" = 1'-0"

N

FLOOR FRAMING PLAN NOTES:

1. VERIFY ALL DIMENSIONS WITH ARCHITECTURAL DRAWINGS.
2. SEE ARCHITECTURAL DRAWINGS FOR FLOOR DRAINS, SLOPES, CURBS, FLOOR ELEVATIONS, AND NON-LOAD BEARING AND OTHER WALLS.
3. CENTERLINE OF COLUMNS AND WALLS ARE ON GRIDLINES U.N.O. SEE ARCHITECTURAL DRAWINGS FOR GRIDLINE & COLUMN OFFSET DIMENSIONS.
4. SEE SHEET SERIES S-0 FOR GENERAL NOTES AND DESIGN CRITERIA.
5. W1 - INDICATES WALL TYPE. SEE SHEET SERIES S-4 FOR TYPICAL TOWER WALL DETAILS AND REINFORCING.
6. SEE SHEET SERIES S-5 FOR TYPICAL TOWER SLAB AND FRAMING DETAILS.

NO.	DATE	REVISONS

STEVEN M. BALDRIDGE — LICENSED PROFESSIONAL ENGINEER — No. 7874-S — HAWAII, U.S.A.

THIS WORK WAS PREPARED BY ME OR UNDER MY SUPERVISION AND CONTROL FOR THE EXACT PROJECT WILL BE UNDER MY OBSERVATION. CHAPTER 16-115, DEPARTMENT OF COMMERCE AND CONSUMER AFFAIRS

EXP. APRIL 30, 2014

FOR BALDRIDGE & ASSOCIATES
STRUCTURAL ENGINEERING, INC.

KAKAAKO WORKFORCE HOUSING

PER SUBCHAPTER 4 OF 2011 MAUKA PLAN AND RULES

801 SOUTH STREET
HONOLULU, HAWAII

TOWER 16TH-19TH, 30TH-33RD, & 43RD-46TH FLOOR FRAMING PLAN

KAZU YATO, AIA & ASSOCIATES, INC.
2033 ROUNDTOP TERRACE
HONOLULU, HI 96822
TEL: (808) 945-0040
FAX: (808) 945-0041

DATE	DRAWN	CHECK	FILE
11/08/12	TD	SB	

SHEET

S-1.7

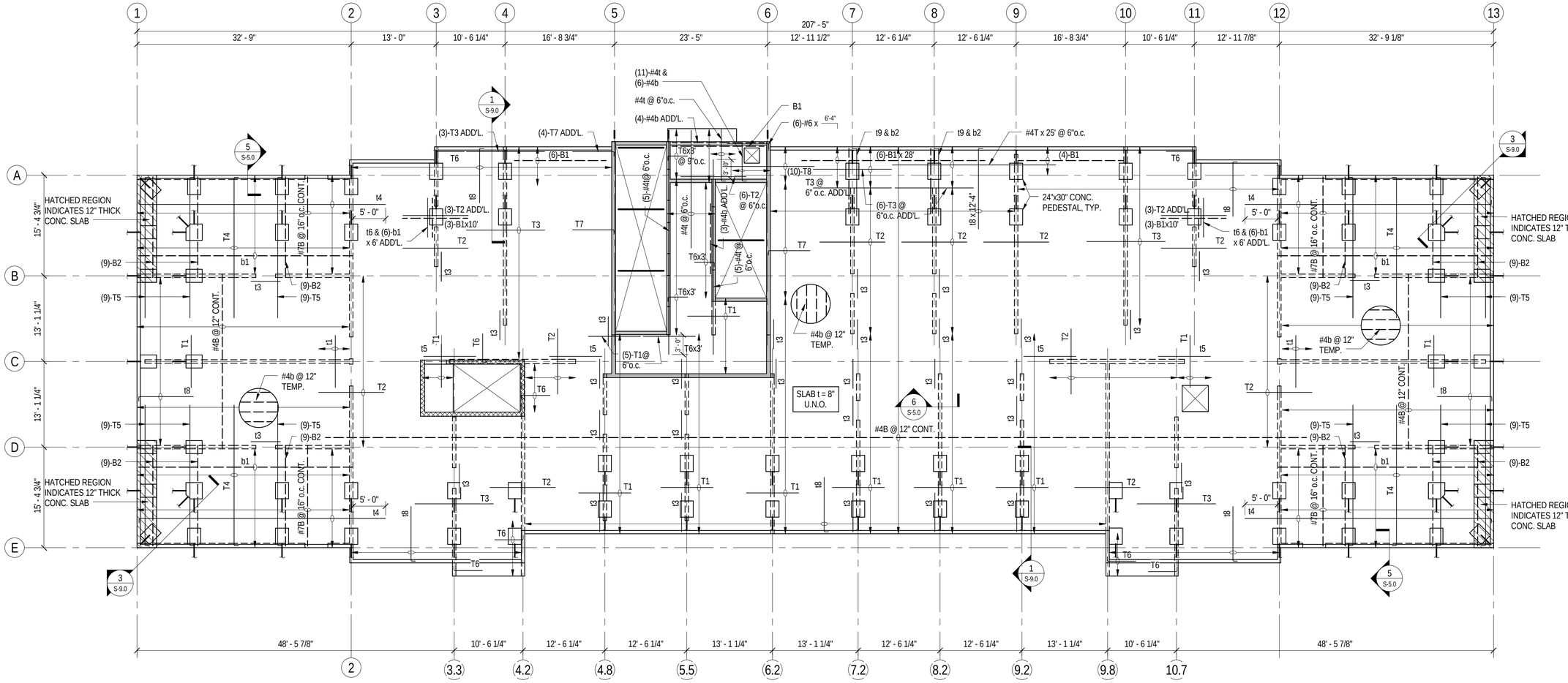

ROOF SLAB REBAR SCHEDULE		
MARK	REINFORCING	COMMENTS
T1, t1	#4 x 8'-0" @ 12" o.c. (U.N.O.)	-
T2, t2	#4 x 10'-0" @ 12" o.c. (U.N.O.)	-
T3	#4 x 12'-0" @ 12" o.c. (U.N.O.)	-
t3	(6) - #4 x 6'-0" @ 9" o.c.	-
T4	#7 x 21'-6" @ 16" o.c.	-
t4	#6 @ 6" o.c.	-
T5	#7 x 21'-6" @ 8" o.c. ADD'L.	-
t5	(6) - #4 x 8'-0" @ 9" o.c.	-
T6	#4 x 4'-4" @ 12" o.c. (U.N.O.)	-
t6	(6) - #6 x 6'-0" @ 9" o.c. (U.N.O.)	-
T7	#4 x 6'-4" @ 12" o.c. (U.N.O.)	-
t7	#4 x 6'-4" @ 12" o.c.	-
T8	#6 x 14'-0"	-
t8	#4 x 8'-4" @ 12" o.c.	TYP. AT PARAPET U.N.O.
t9	(14)-#6 x 10'-4" @ 6" o.c. ADD'L.	-
B1	#4 @ 12" o.c. ADD'L.	PLACE MIDWAY BETWEEN CONT. "B" STEEL
b1	#6 @ 6" o.c. CONT.	-
B2	#7 x 15'-0" @ 8" o.c. ADD'L. (U.N.O.)	-
b2	(12)-#6 x 10'-0" @ 6" o.c. ADD'L.	PLACE MIDWAY BETWEEN CONT. "B" STEEL

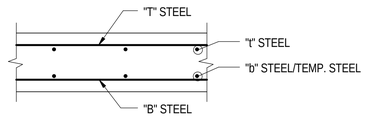

SLAB BAR PLACEMENT DIAGRAM

1 S-1.8 TOWER ROOF FRAMING PLAN

SCALE: 1/8" = 1'-0"

N

ROOF FRAMING PLAN NOTES:

1. VERIFY ALL DIMENSIONS WITH ARCHITECTURAL DRAWINGS.
2. SEE ARCHITECTURAL DRAWINGS FOR FLOOR DRAINS, SLOPES, CURBS, FLOOR ELEVATIONS, AND NON-LOAD BEARING AND OTHER WALLS.
3. CENTERLINE OF COLUMNS AND WALLS ARE ON GRIDLINES U.N.O. SEE ARCHITECTURAL DRAWINGS FOR GRIDLINE & COLUMN OFFSET DIMENSIONS.
4. SEE SHEET SERIES S-0 FOR GENERAL NOTES AND DESIGN CRITERIA.
5. W1 - INDICATES WALL TYPE. SEE SHEET SERIES S-4 FOR TYPICAL TOWER WALL DETAILS AND REINFORCING.
6. SEE SHEET SERIES S-5 FOR TYPICAL TOWER SLAB AND FRAMING DETAILS.

REVISONS

NO.	DATE

STEVEN M. BALDRIDGE * LICENSED PROFESSIONAL ENGINEER * No. 7874-S * U.S.A. HAWAII

THIS WORK WAS PREPARED BY ME OR UNDER MY SUPERVISION AND COMPLIES WITH BOARD RULES AND WILL BE UNDER MY OBSERVATION. CHAPTER 16-115, DEPARTMENT OF COMMERCE AND CONSUMER AFFAIRS

EXP. APRIL 30, 2014

FOR BALDRIDGE & ASSOCIATES STRUCTURAL ENGINEERING, INC.

KAKAAKO WORKFORCE HOUSING
PER SUBCHAPTER 4 OF 2011 MAUKA PLAN AND RULES
801 SOUTH STREET
HONOLULU, HAWAII
TOWER ROOF FRAMING PLAN

KAZU YATO, AIA & ASSOCIATES, INC.
2033 ROUNTOP TERRACE
HONOLULU, HI 96822
TEL: (808) 945-0343
FAX: (808) 945-5041

DATE	DRAWN	CHECK	FILE
11/08/12	TD	SB	

SHEET

S-1.8

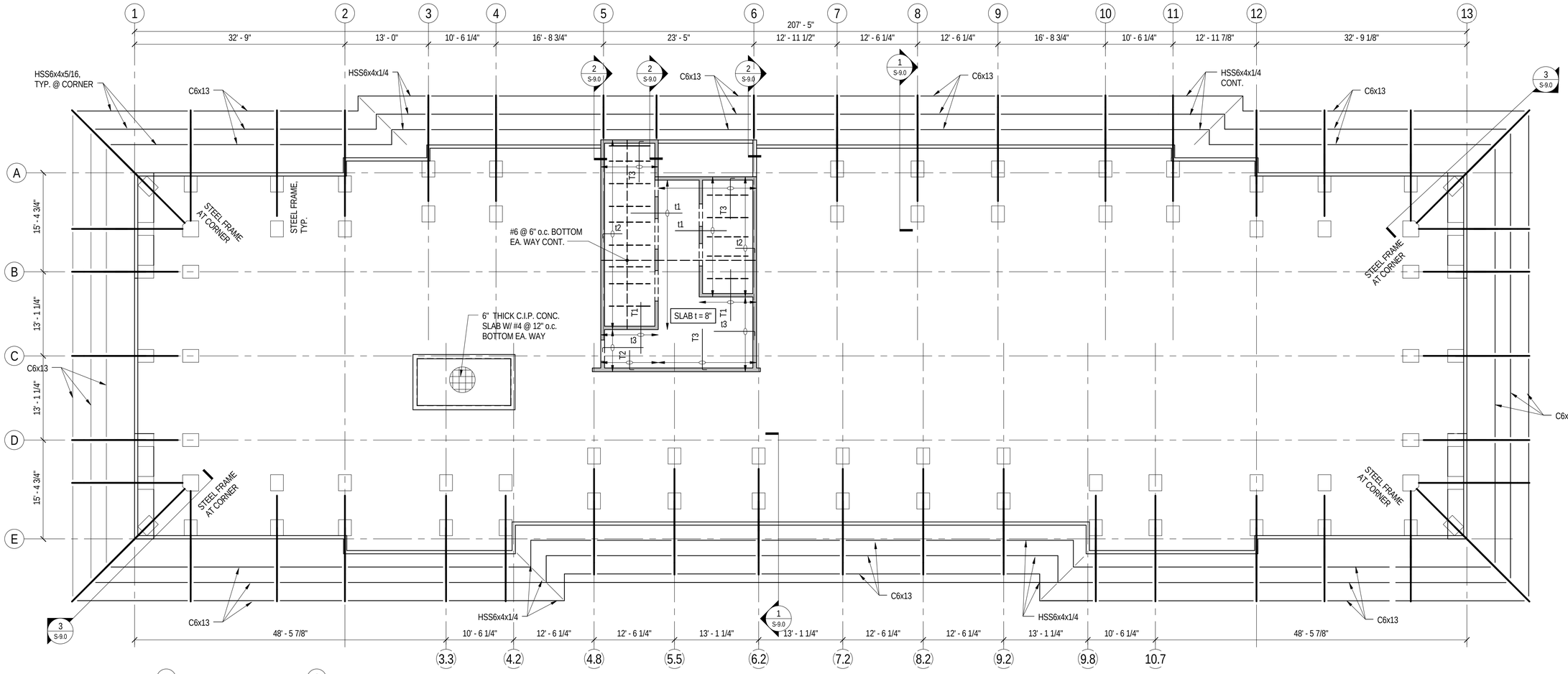

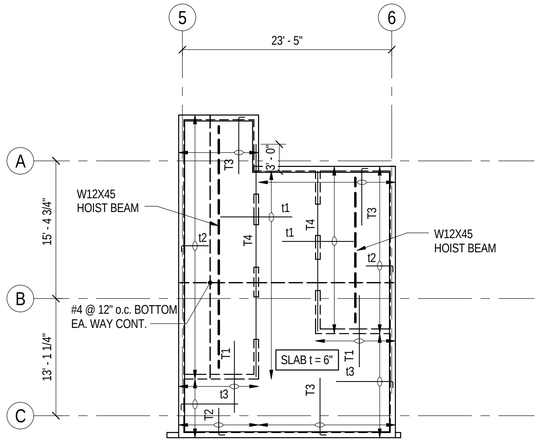

MACHINE ROOM FLOOR SLAB REBAR SCHEDULE

MARK	REINFORCING	COMMENTS
T1	#4 x 8'-0" @ 12" o.c.	-
t1	#4 x 6'-0" @ 12" o.c. (U.N.O.)	-
T2, t2	#4 x 3'-0" @ 12" o.c.	-
T3, t3	#4 x 6'-4" @ 12" o.c.	-

MACHINE ROOM ROOF SLAB REBAR SCHEDULE

MARK	REINFORCING	COMMENTS
T1	#4 x 8'-0" @ 16" o.c.	-
t1	#4 x 6'-0" @ 16" o.c. (U.N.O.)	-
T2, t2	#4 x 3'-0" @ 16" o.c.	-
T3, t3	#4 x 6'-4" @ 16" o.c.	-
T4	(5)-#4 @ 6" o.c.	-

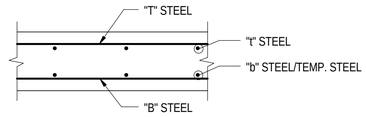

SLAB BAR PLACEMENT DIAGRAM

1 S-1.9 TOWER ELEVATOR MACHINE ROOM FLOOR FRAMING PLAN

SCALE: 1/8" = 1'-0"

ROOF FRAMING PLAN NOTES:

1. VERIFY ALL DIMENSIONS WITH ARCHITECTURAL DRAWINGS.
2. SEE ARCHITECTURAL DRAWINGS FOR FLOOR DRAINS, SLOPES, CURBS, FLOOR ELEVATIONS, AND NON-LOAD BEARING AND OTHER WALLS.
3. CENTERLINE OF COLUMNS AND WALLS ARE ON GRIDLINES U.N.O. SEE ARCHITECTURAL DRAWINGS FOR GRIDLINE & COLUMN OFFSET DIMENSIONS.
4. SEE SHEET SERIES S-0 FOR GENERAL NOTES AND DESIGN CRITERIA.
5. SEE SHEET SERIES S-5 FOR TYPICAL TOWER SLAB AND FRAMING DETAILS.

.

2 S-1.9 TOWER ELEVATOR MACHINE ROOM ROOF FRAMING PLAN

SCALE: 1/8" = 1'-0"

REVISONS

NO.	DATE

STEVEN M. BALDRIDGE, S.E. LICENSED PROFESSIONAL ENGINEER No. 7876-S HAWAII U.S.A.

THIS WORK WAS PREPARED BY ME OR UNDER MY SUPERVISION AND CONSTITUTES THE PROFESSIONAL WORK THAT WILL BE UNDER MY OBSERVATION. CHAPTER 16-115, DEPARTMENT OF COMMERCE AND CONSUMER AFFAIRS

EXP. APRIL 30, 2014

FOR BALDRIDGE & ASSOCIATES STRUCTURAL ENGINEERING, INC.

KAKAAKO WORKFORCE HOUSING

PER SUBCHAPTER 4 OF 2011 MAUKA PLAN AND RULES

801 SOUTH STREET
HONOLULU, HAWAII

TOWER ELEVATOR MACHINE ROOM FLOOR FRAMING PLAN

KAZU YATO, AIA & ASSOCIATES, INC.
2033 ROUNTOP TERRACE
HONOLULU, HI 96822
TEL: (808) 945-0501
FAX: (808) 945-5501

DATE 11/08/12 | DRAWN TD | CHECK SB | FILE

SHEET

S-1.9

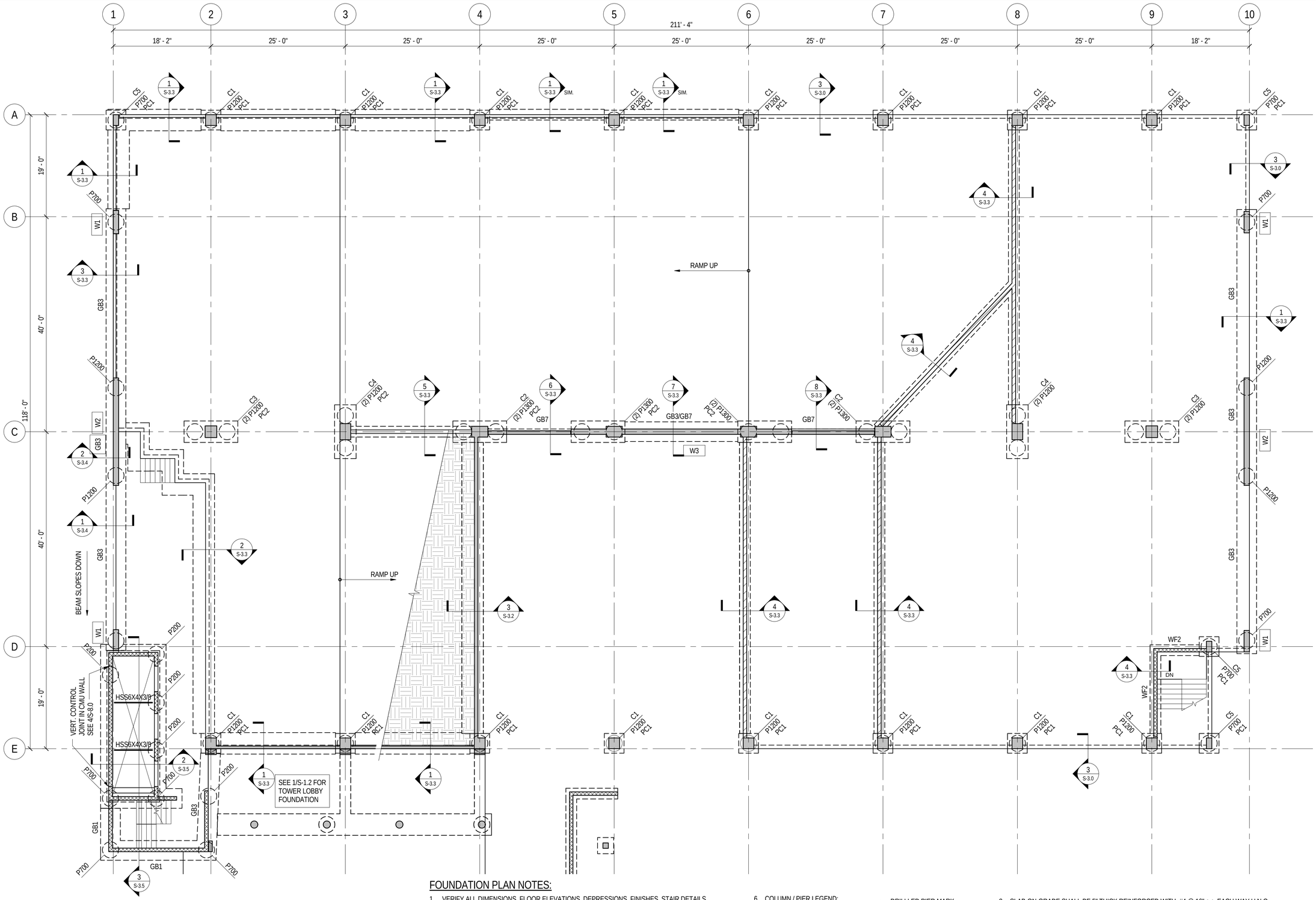

GARAGE GROUND LEVEL FOUNDATION PLAN

1 / S-2.0

SCALE: 1/8" = 1'-0"

FOUNDATION PLAN NOTES:

1. VERIFY ALL DIMENSIONS, FLOOR ELEVATIONS, DEPRESSIONS, FINISHES, STAIR DETAILS, GUARDRAILS, ETC. WITH ARCHITECTURAL DRAWINGS. NOTIFY ENGINEER AND ARCHITECT OF ANY CONFLICTS PRIOR TO CONSTRUCTION. FOLOW GEOTECH. ENGINEERS DIRECTION TO LOCATE TOP OF FOOTING ELEVATIONS.
2. SEE ARCH'L. & MECH'L. AND PLUMBING DRAWINGS FOR DUCTS, CHASES, PIPES, ETC.
3. SEE SHEET SERIES S-0 FOR GENERAL NOTES AND DESIGN CRITERIA.
4. SEE SHEET SERIES S-3 FOR FOUNDATION DETAILS.
5. SEE SHEET SERIES S-6 FOR GARAGE COLUMN AND WALL DETAILS.
6. COLUMN / PIER LEGEND:
   COLUMN MARK SEE S-6.0 — C1 / P1200 PC1 — DRILLLED PIER MARK SEE 1/S-3.1; PIER CAP MARK SEE S-3.1
7. DRILLED PIERS SHALL BE CENTERED AT CENTERLINE OF COLUMNS U.N.O. CONCRETE WALLS SHALL BE CENTERED ON WALL FOOTINGS U.N.O.
8. SLAB-ON-GRADE SHALL BE 5" THICK REINFORCED WITH #4 @ 16" o.c. EACH WAY U.N.O. PREPARE SUBGRADE IN ACCORDANCE WITH GEOTECHNICAL ENGINEER'S RECOMMENDATIONS.
9. GB3 - INDICATES GRADE BEAM TYPE. SEE SHEET S-3.1 FOR GRADE BEAM SCHEDULE.
10. W1 - INDICATES WALL TYPE. SEE SHEET SERIES S-6.0 FOR WALL ELEVATIONS & WALL DETAILS.
11. - INDICATES 8" THICK (NOMINAL) LOAD BEARING CMU WALL, SEE SHEET S-8.0.
    - INDICATES 8" THICK (NOMINAL) NON-LOAD BEARING CMU WALL, SEE SHEET S-8.0.

NO.	DATE	REVISONS

STEVEN M. BALDRIDGE U.S.A. HAWAII LICENSED PROFESSIONAL ENGINEER No. 7876-S

THIS WORK WAS PREPARED BY ME OR UNDER MY SUPERVISION AND CONSTITUTES MY PROFESSIONAL ACT. WILL BE UNDER MY OBSERVATION. CHAPTER 16-115, DEPARTMENT OF COMMERCE AND CONSUMER AFFAIRS

EXP. APRIL 30, 2014

FOR BALDRIDGE & ASSOCIATES STRUCTURAL ENGINEERING, INC.

KAKAAKO WORKFORCE HOUSING

PER SUBCHAPTER 4 OF 2011 MAUKA PLAN AND RULES

801 SOUTH STREET
HONOLULU, HAWAII

GARAGE GROUND LEVEL FOUNDATION PLAN

KAZU YATO, AIA & ASSOCIATES,INC.
2033 ROUNDTOP TERRACE
HONOLULU, HI 96822
TEL: (808) 946-0500
FAX: (808) 942-0041

DATE	DRAWN	CHECK	FILE
11/08/12	TD	SB	

SHEET

S-2.0

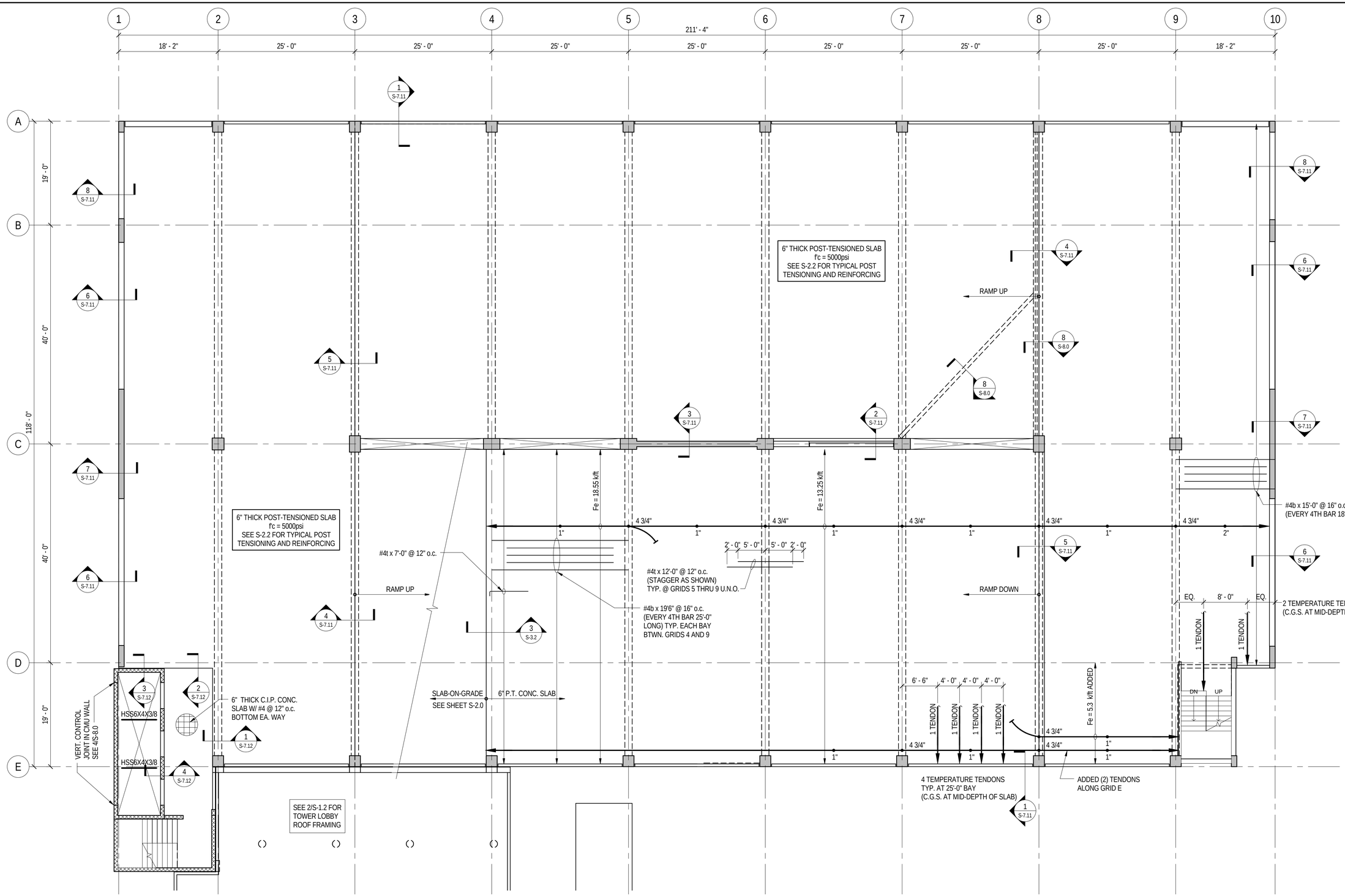

POST TENSIONING PLAN NOTES:

1. P.T. TENDONS SHALL BE ASTM 416, 1/2" DIAMETER, SEVEN WIRE STRAND, LOW-RELAXATION TYPE, EFFECTIVE FORCE SHALL BE 26.5 KIPS PER TENDON.
2. A MINIMUM OF 2 TENDONS IN EACH DIRECTION SHALL RUN CONTINUOUS OVER EACH COLUMN AT BEAMS ONLY.
3. THE CONTRACTOR SHALL SUBMIT DETAILED CONSTRUCTION JOINT/CLOSURE STRIP PLAN AND CONSTRUCTION SEQUENCE PLAN FOR THE S.E.R. TO REVIEW PRIOR TO THE COMMENCEMENT OF SHOP DRAWINGS. SEE DETAILS 6 & 7/S-7.1 FOR CONSTRUCTION JOINTS. SEE DETAIL 1/S-7.2 FOR CLOSURE STRIP.
4. ——•—— INDICATES C.G.S. OF POST-TENSIONED TENDONS. CENTER OF GRAVITY (C.G.S.) MEASURED FROM THE BOTTOM OF THE SLAB OR BEAM U.N.O.
5. NOTE: STRESSING AND DEAD ENDS ARE SHOWN FOR GENERAL INFORMATION ONLY. ANCHOR LAYOUTS, ADEQUATE COVER CONSTRUCTION SEQUENCE MAY REQUIRE ALTERING LAYOUT.
   ——| INDICATES DEAD END OF TENDON; C.G.S. TO B E LOCATED AT MID-DEPTH OF SLAB, U.N.O.
   ——► INDICATES STRESSING END OF TENDON; C.G.S. TO B E LOCATED AT MID-DEPTH
6. #4b INDICATES SIZE OF BOTTOM BARS
   #4t INDICATES SIZE OF TOP BARS
   #5 T&B INDICATES SIZE OF TOP AND BOTTOM BARS

1 / S-2.1 GARAGE 2nd LEVEL FRAMING PLAN

SCALE: 1/8" = 1'-0"

REVISONS

NO.	DATE

STEVEN M. BALDRIDGE ★ U.S.A. ★ HAWAII
LICENSED PROFESSIONAL ENGINEER
No. 7876-S

THIS WORK WAS PREPARED BY ME OR UNDER MY SUPERVISION AND CONTROL FOR THIS PROJECT AND WILL BE UNDER MY OBSERVATION. CHAPTER 16-115, DEPARTMENT OF COMMERCE AND CONSUMER AFFAIRS
EXP. APRIL 30, 2014

FOR BALDRIDGE & ASSOCIATES
STRUCTURAL ENGINEERING, INC.

KAKAAKO WORKFORCE HOUSING
PER SUBCHAPTER 4 OF 2011 MAUKA PLAN AND RULES
801 SOUTH STREET
HONOLULU, HAWAII

GARAGE 2ND LEVEL FRAMING PLAN

KAZU YATO, AIA & ASSOCIATES, INC.
2033 ROUNDTOP TERRACE
HONOLULU, HI 96822
TEL: (808) 945-0040
FAX: (808) 945-0041

DATE	DRAWN	CHECK	FILE
11/08/12	TD	SB	

SHEET

S-2.1

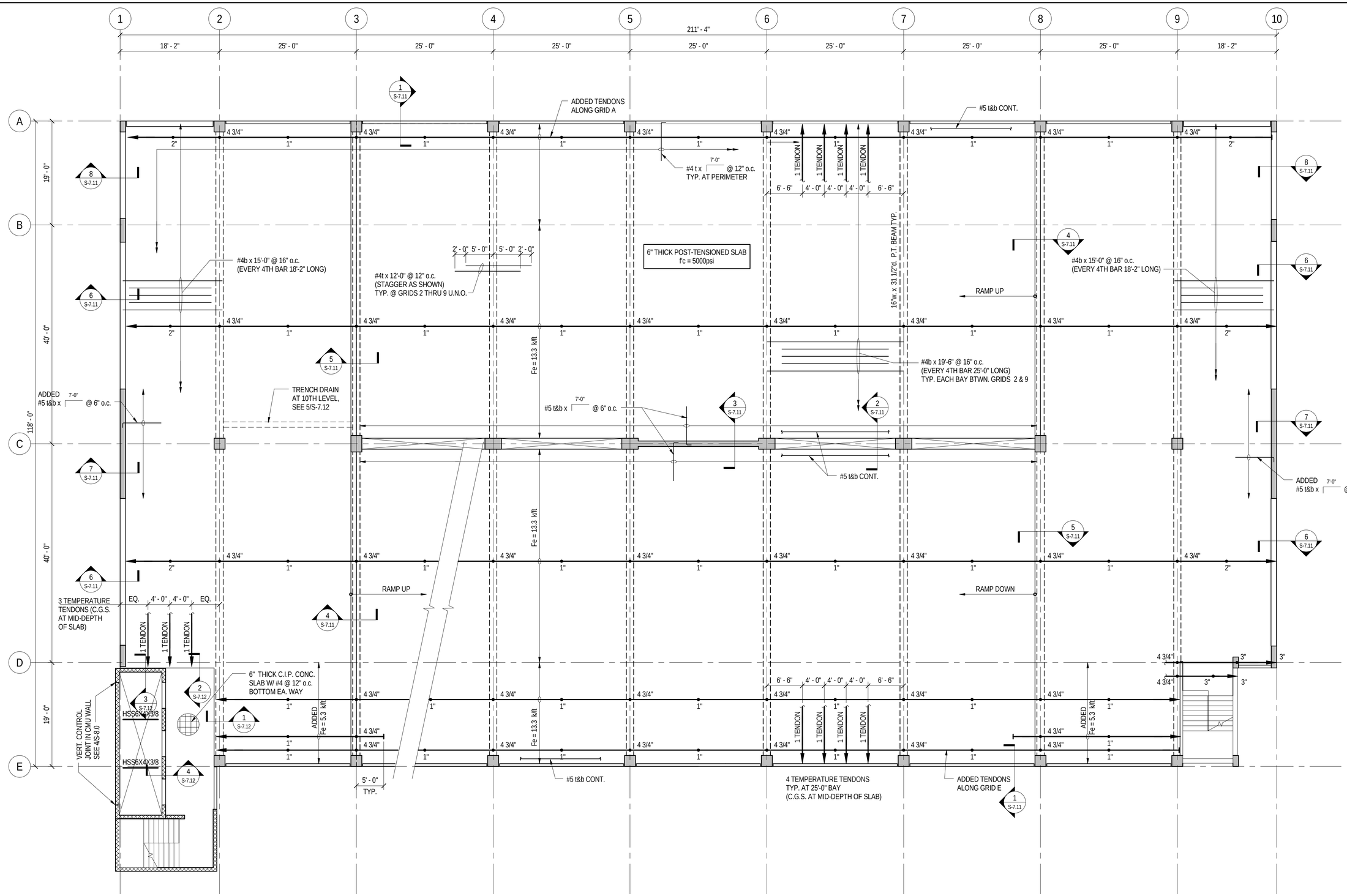

GARAGE TYPICAL LEVEL FRAMING PLAN

1 / S-2.2

SCALE: 1/8" = 1'-0"

POST TENSIONING PLAN NOTES:

1. P.T. TENDONS SHALL BE ASTM 416, 1/2" DIAMETER, SEVEN WIRE STRAND, LOW-RELAXATION TYPE, EFFECTIVE FORCE SHALL BE 26.5 KIPS PER TENDON.
2. A MINIMUM OF 2 TENDONS IN EACH DIRECTION SHALL RUN CONTINUOUS OVER EACH COLUMN AT BEAMS ONLY.
3. THE CONTRACTOR SHALL SUBMIT DETAILED CONSTRUCTION JOINT/CLOSURE STRIP PLAN AND CONSTRUCTION SEQUENCE PLAN FOR THE S.E.R. TO REVIEW PRIOR TO THE COMMENCEMENT OF SHOP DRAWINGS. SEE DETAILS 6 & 7/S-7.1 FOR CONSTRUCTION JOINTS. SEE DETAIL 1/S-7.2 FOR CLOSURE STRIP.
4. —●— INDICATES C.G.S. OF POST-TENSIONED TENDONS. CENTER OF GRAVITY (C.G.S.) MEASURED FROM THE BOTTOM OF THE SLAB OR BEAM U.N.O.
5. NOTE: STRESSING AND DEAD ENDS ARE SHOWN FOR GENERAL INFORMATION ONLY. ANCHOR LAYOUTS, ADEQUATE COVER CONSTRUCTION SEQUENCE MAY REQUIRE ALTERING LAYOUT.
   —| INDICATES DEAD END OF TENDON; C.G.S. TO B E LOCATED AT MID-DEPTH OF SLAB, U.N.O.
   —► INDICATES STRESSING END OF TENDON; C.G.S. TO B E LOCATED AT MID-DEPTH
6. #4b INDICATES SIZE OF BOTTOM BARS
   #4t INDICATES SIZE OF TOP BARS
   #5 T&B INDICATES SIZE OF TOP AND BOTTOM BARS

FLOOR FRAMING PLAN NOTES:

1. VERIFY ALL DIMENSIONS, FLOOR ELEVATIONS, DEPRESSIONS, FINISHES, STAIR DETAILS, GUARDRAILS, ETC. WITH ARCHITECTURAL DRAWINGS. NOTIFY ENGINEER AND ARCHITECT OF ANY CONFLICTS PRIOR TO CONSTRUCTION.
2. SEE ARCH'L. & MECH'L. AND PLUMBING DRAWINGS FOR DUCTS, CHASES, PIPES, ETC.
3. SEE SHEET SERIES S-0. FOR GENERAL NOTES AND DESIGN CRITERIA.
4. SEE SHEET SERIES S-6 FOR GARAGE COLUMN AND WALL DETAILS.
5. SEE SHEET SERIES S-7 FOR GARAGE PT SLAB, BEAM AND FRAMING DETAILS.
6. SEE SHEET SERIES S-9 FOR GARAGE CONCRETE STAIR DETAILS.
7. ▨ INDICATES 8" THICK (NOMINAL) CMU WALL, SEE SHEET S-8.0.

REVISONS

NO.	DATE

STEVEN M. BALDRIDGE * U.S.A. * HAWAII
LICENSED PROFESSIONAL ENGINEER
No. 7876-S

THIS WORK WAS PREPARED BY ME OR UNDER MY SUPERVISION AND CONSTITUTES THE EXTENT OF THE WORK WHICH WILL BE UNDER MY OBSERVATION. CHAPTER 16-115, DEPARTMENT OF COMMERCE AND CONSUMER AFFAIRS

EXP. APRIL 30, 2014

FOR BALDRIDGE & ASSOCIATES STRUCTURAL ENGINEERING, INC.

KAKAAKO WORKFORCE HOUSING

PER SUBCHAPTER 4 OF 2011 MAUKA PLAN AND RULES

801 SOUTH STREET
HONOLULU, HAWAII

GARAGE TYPICAL LEVEL FRAMING PLAN

KAZU YATO, AIA & ASSOCIATES, INC.
2033 ROUNDTOP TERRACE
HONOLULU, HI 96822
TEL: (808) 945-0045
FAX: (808) 945-0041

DATE	DRAWN	CHECK	FILE
11/08/12	TD	SB	

SHEET

S-2.2

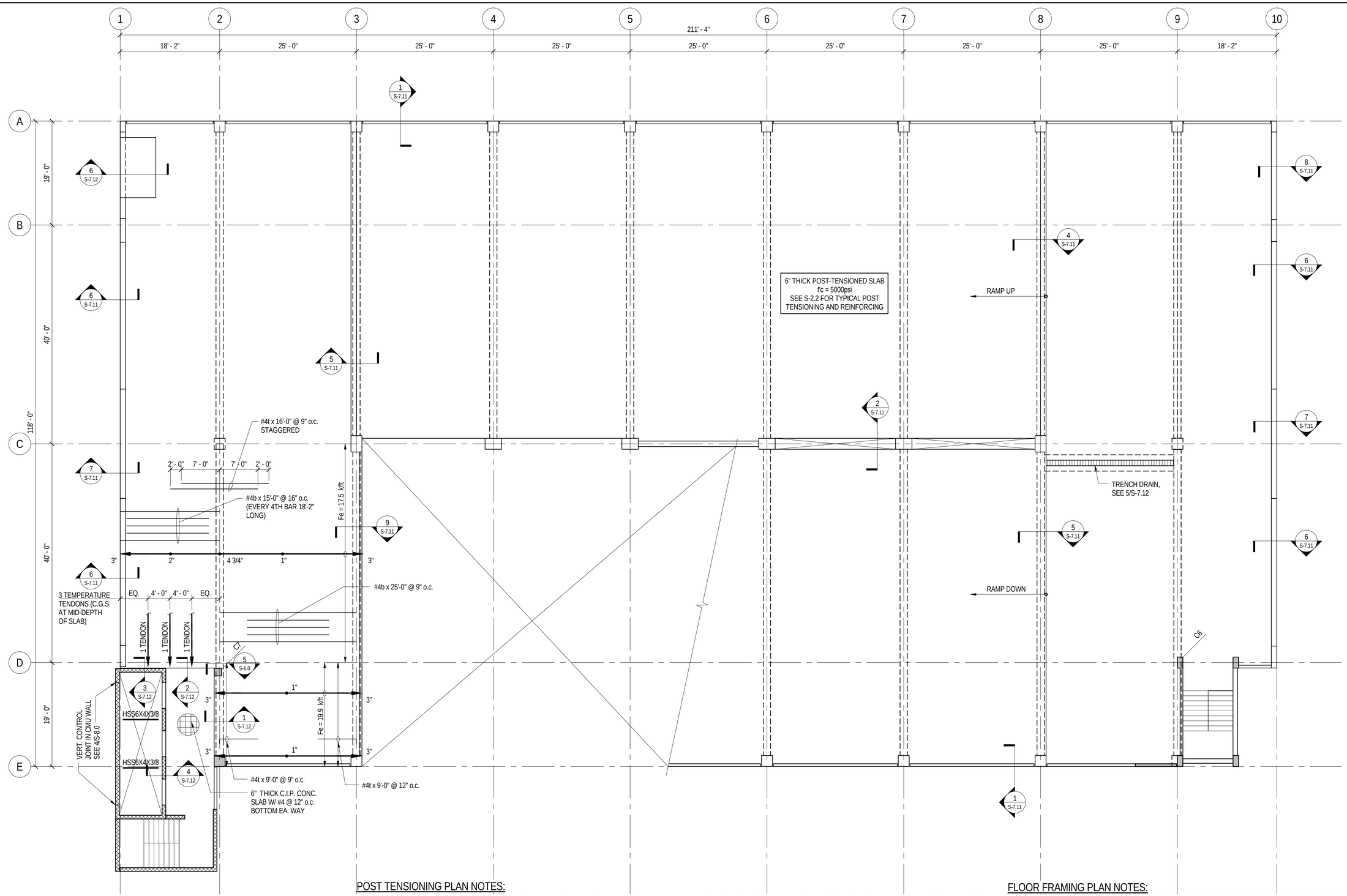

1 / S-2.3 GARAGE 11th LEVEL FRAMING PLAN

SCALE: 1/8" = 1'-0"

POST TENSIONING PLAN NOTES:

1. P.T. TENDONS SHALL BE ASTM 416, 1/2" DIAMETER, SEVEN WIRE STRAND, LOW-RELAXATION TYPE, EFFECTIVE FORCE SHALL BE 26.5 KIPS PER TENDON.
2. A MINIMUM OF 2 TENDONS IN EACH DIRECTION SHALL RUN CONTINUOUS OVER EACH COLUMN AT BEAMS ONLY.
3. THE CONTRACTOR SHALL SUBMIT DETAILED CONSTRUCTION JOINT/CLOSURE STRIP PLAN AND CONSTRUCTION SEQUENCE PLAN FOR THE S.E.R. TO REVIEW PRIOR TO THE COMMENCEMENT OF SHOP DRAWINGS. SEE DETAILS 6 & 7/S-7.1 FOR CONSTRUCTION JOINTS. SEE DETAIL 1/S-7.2 FOR CLOSURE STRIP.
4. —●— INDICATES C.G.S. OF POST-TENSIONED TENDONS. CENTER OF GRAVITY (C.G.S.) MEASURED FROM THE BOTTOM OF THE SLAB OR BEAM U.N.O.
5. NOTE: STRESSING AND DEAD ENDS ARE SHOWN FOR GENERAL INFORMATION ONLY. ANCHOR LAYOUTS, ADEQUATE COVER CONSTRUCTION SEQUENCE MAY REQUIRE ALTERING LAYOUT.
   —| INDICATES DEAD END OF TENDON; C.G.S. TO B E LOCATED AT MID-DEPTH OF SLAB, U.N.O.
   —► INDICATES STRESSING END OF TENDON; C.G.S. TO B E LOCATED AT MID-DEPTH
6. #4b INDICATES SIZE OF BOTTOM BARS
   #4t INDICATES SIZE OF TOP BARS
   #5 T&B INDICATES SIZE OF TOP AND BOTTOM BARS

FLOOR FRAMING PLAN NOTES:

1. VERIFY ALL DIMENSIONS, FLOOR ELEVATIONS, DEPRESSIONS, FINISHES, STAIR DETAILS, GUARDRAILS, ETC. WITH ARCHITECTURAL DRAWINGS. NOTIFY ENGINEER AND ARCHITECT OF ANY CONFLICTS PRIOR TO CONSTRUCTION.
2. SEE ARCH'L. & MECH'L. AND PLUMBING DRAWINGS FOR DUCTS, CHASES, PIPES, ETC.
3. SEE SHEET SERIES S-0. FOR GENERAL NOTES AND DESIGN CRITERIA.
4. SEE SHEET SERIES S-6 FOR GARAGE COLUMN AND WALL DETAILS.
5. SEE SHEET SERIES S-7 FOR GARAGE PT SLAB, BEAM AND FRAMING DETAILS.
6. SEE SHEET SERIES S-9 FOR GARAGE CONCRETE STAIR DETAILS.
7. ▭ INDICATES 8" THICK (NOMINAL) CMU WALL, SEE SHEET S-8.0.

REVISONS

NO.	DATE

STEVEN M. BALDRIDGE ★ U.S.A. ★ HAWAII
LICENSED PROFESSIONAL ENGINEER
No. 7876-S

THIS WORK WAS PREPARED BY ME OR UNDER MY SUPERVISION AND CONTROL FOR THIS PROJECT AND WILL BE UNDER MY OBSERVATION. CHAPTER 16-115, DEPARTMENT OF COMMERCE AND CONSUMER AFFAIRS

EXP. APRIL 30, 2014

FOR BALDRIDGE & ASSOCIATES
STRUCTURAL ENGINEERING, INC.

KAKAAKO WORKFORCE HOUSING
PER SUBCHAPTER 4 OF 2011 MAUKA PLAN AND RULES

801 SOUTH STREET
HONOLULU, HAWAII

GARAGE 11TH LEVEL FRAMING PLAN

KAZU YATO, AIA & ASSOCIATES, INC.
2033 ROUNTOP TERRACE
HONOLULU, HI 96822
TEL: (808) 945-0501
FAX: (808) 945-5501

DATE	DRAWN	CHECK	FILE
11/08/12	TD	SB	

SHEET

S-2.3

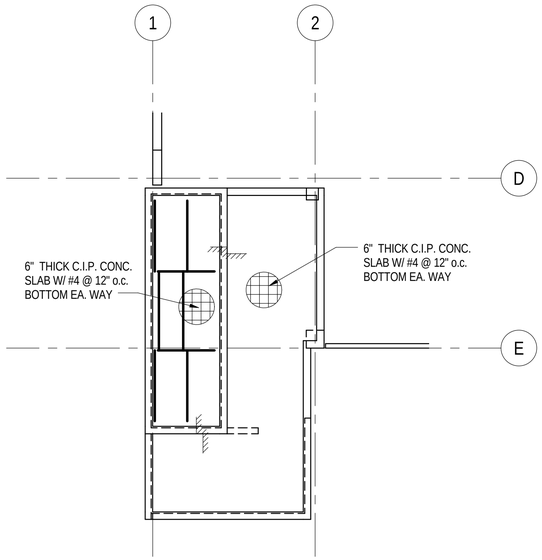

1 S-2.4 GARAGE ELEVATOR & STAIR #3 ROOF FRAMING PLAN

SCALE: 1/8" = 1'-0"

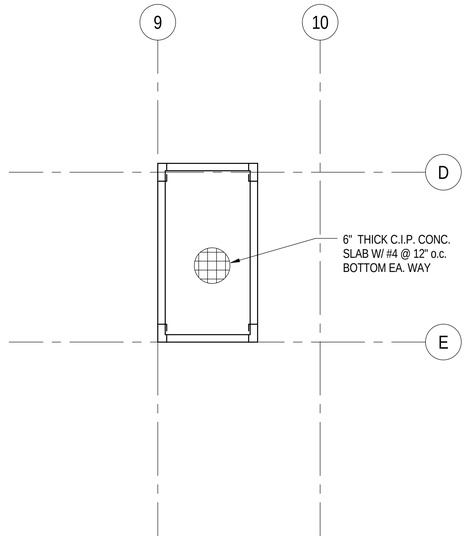

2 S-2.4 GARAGE STAIR #4 ROOF FRAMING PLAN

SCALE: 1/8" = 1'-0"

REVISONS

NO.	DATE	

STEVEN M. BALDRIDGE
LICENSED PROFESSIONAL ENGINEER
No. 7876-S
HAWAII, U.S.A.

THIS WORK WAS PREPARED BY ME OR UNDER MY SUPERVISION AND CONSTRUCTION OF THIS PROJECT WILL BE UNDER MY OBSERVATION. CHAPTER 16-115, DEPARTMENT OF COMMERCE AND CONSUMER AFFAIRS

EXP. APRIL 30, 2014

FOR BALDRIDGE & ASSOCIATES STRUCTURAL ENGINEERING, INC.

KAKAAKO WORKFORCE HOUSING
PER SUBCHAPTER 4 OF 2011 MAUKA PLAN AND RULES

801 SOUTH STREET
HONOLULU, HAWAII

GARAGE ELEVATOR & STAIR ROOF FRAMING PLANS

KAZU YATO, AIA & ASSOCIATES,INC.

2033 ROUNDTOP TERRACE
HONOLULU, HI 96822

TEL: (808) 945-0040
FAX: (808) 945-0041

DATE	DRAWN	CHECK	FILE
11/08/12	TD	SB	

SHEET

S-2.4

NOTES:

1. PROVIDE CURING COMPOUND & CONTROL JOINTS TO MINIMIZE SHRINKAGE CRACKS.
2. SPACING OF JOINTS SHALL NOT EXCEED 15'–0" IN EITHER DIRECTION NOR HAVE AN ASPECT RATIO GREATER THAN 1.5. PROVIDE CONTROL JOINTS ON ALL COLUMN LINES AND AT ALL RE–ENTRANT CORNERS. CONSTRUCTION JOINT MAY BE USED AT ANY CONTROL JOINT LOCATION. SEE 2/S–3.0.
3. INSTALL VAPOR RETARDER PER MANUFACTURER'S INSTRUCTIONS. PLACE LAYER OF CRUSHER FINES OVER VAPOR RETARDER WHEN PERMITTED BY ARCHITECT. WHEN CONCRETE IS PLACED DIRECTLY ON VAPOR RETARDER, TAKE ADEQUATE MEASURES (CONCRETE MIX DESIGN, CURING PROCESS, ETC.) TO PREVENT EXCESS BLEEDING AND TO MINIMIZE SLAB CURL.

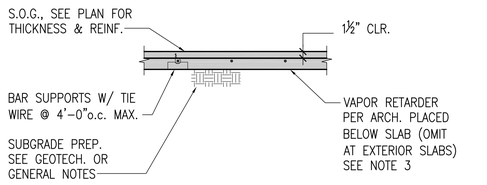

1 S–3.0 **TYP. CONCRETE SLAB ON GRADE**
SCALE: 3/4" = 1'–0"

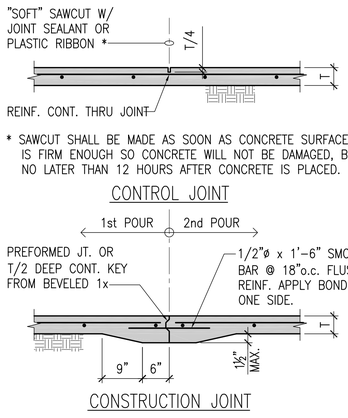

* SAWCUT SHALL BE MADE AS SOON AS CONCRETE SURFACE IS FIRM ENOUGH SO CONCRETE WILL NOT BE DAMAGED, BUT NO LATER THAN 12 HOURS AFTER CONCRETE IS PLACED.

CONTROL JOINT

CONSTRUCTION JOINT

2 S–3.0 **SLAB ON GRADE JOINT DETAILS**
NOT TO SCALE

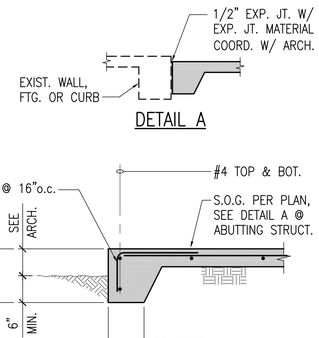

DETAIL A

3 S–3.0 **TYP. THICKENED SLAB EDGE**
SCALE: 3/4" = 1'–0"

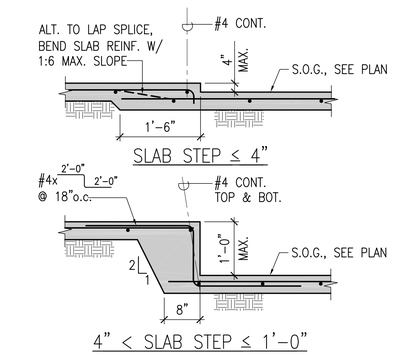

4 S–3.0 **TYP. SLAB ON GRADE STEP**
NOT TO SCALE

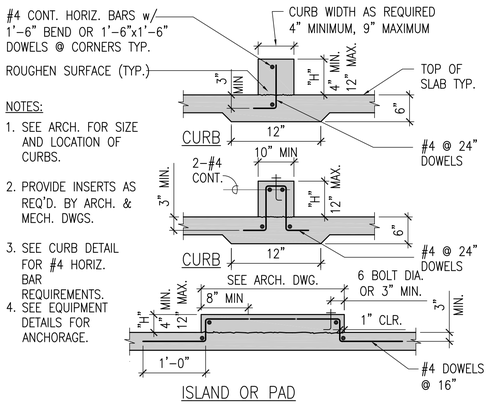

NOTES:

1. SEE ARCH. FOR SIZE AND LOCATION OF CURBS.
2. PROVIDE INSERTS AS REQ'D. BY ARCH. & MECH. DWGS.
3. SEE CURB DETAIL FOR #4 HORIZ. BAR REQUIREMENTS.
4. SEE EQUIPMENT DETAILS FOR ANCHORAGE.

5 S–3.0 **TYP. CONC. CURBS & ISLANDS**
SCALE: 3/4" = 1'–0"

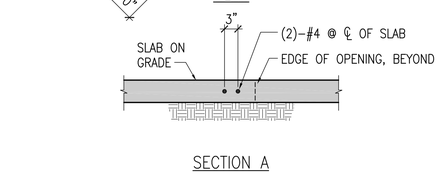

SECTION A

6 S–3.0 **OPENING IN SLAB ON GRADE**
SCALE: 3/4" = 1'–0"

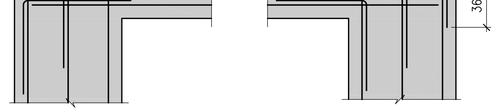

7 S–3.0 **TYP. FOOTING CORNER BAR DETAIL**
SCALE: 3/4" = 1'–0"

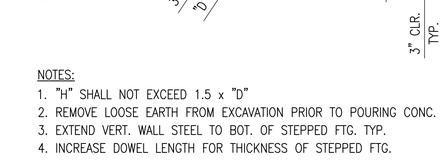

NOTES:

1. "H" SHALL NOT EXCEED 1.5 x "D"
2. REMOVE LOOSE EARTH FROM EXCAVATION PRIOR TO POURING CONC.
3. EXTEND VERT. WALL STEEL TO BOT. OF STEPPED FTG. TYP.
4. INCREASE DOWEL LENGTH FOR THICKNESS OF STEPPED FTG.

8 S–3.0 **TYP. STEP FOOTING DETAIL**
SCALE: NONE

REVISIONS

NO.	DATE	REVISIONS
.	.	.

STEVEN M. BALDRIDGE LICENSED PROFESSIONAL ENGINEER No. 7675-S U.S.A. HAWAII

THIS WORK WAS PREPARED BY ME OR UNDER MY SUPERVISION AND CONSISTS OF PAGES PREPARED BY ME OR UNDER MY DIRECT SUPERVISION AND WILL BE UNDER MY OBSERVATION. CHAPTER 16-115, DEPARTMENT OF COMMERCE AND CONSUMER AFFAIRS
EXP.
April 30, 2014

FOR BALDRIDGE & ASSOCIATES
STRUCTURAL ENGINEERING, INC.

KAKAAKO WORKFORCE HOUSING PER
SUBCHAPTER 4 OF 2011 MAUKA PLAN AND RULES
801 SOUTH STREET
HONOLULU, HAWAII

TYPICAL FOUNDATION DETAILS

KAZU YATO, AIA & ASSOCIATES, INC.
2033 ROUNDTOP TERRACE
HONOLULU, HI 96822
TEL: (808) 845-0040
FAX: (808) 845-0041

DATE	DRAWN	CHECK	FILE
11/08/12	TD	SB	

SHEET

S-3.0

DRILLED PIER SCHEDULE

PIER MARK	PIER DIAMETER (IN.)	f'c (PSI)	LENGTH, L (FT.)	ALLOWABLE DOWNWARD/UPWARD CAPACITY (KIPS)		ALLOWABLE LATERAL CAPACITY (KIPS)	VERTICAL REINFORCEMENT		HORIZONTAL REINFORCEMENT		
				DEAD & LIVE	W/ WIND OR SEISMIC		NO. & SIZE	LENGTH FROM B/PIER CAP/GB	SIZE	TOP SECTION LENGTH	BOTTOM SECTION PITCH
P200	36	4000	18	200	267	–	(6) – #7	FULL	#3	12'–0"	12"
P700	36	4000	30	700	933	50	(6) – #7	FULL	#3	12'–0"	12"
							(12) – #7	12'–0"			
P1100	36	4000	40	1100	1467	120	(6) – #9	FULL	#3	12'–0"	12"
							(14) – #9	18'–0"			
P1200	36	4000	43	1200	1600	210	(7) – #7	FULL	#3	12'–0"	12"
							(14) – #7	12'–0"			
P1300	36	5000	45	1300	1733	210	(6) – #11	FULL	#4	12'–0"	12"
							(12) – #11	22'–0"			

DRILLED PIER SCHEDULE NOTES:

1. VERTICAL BARS SHALL HAVE ACI STANDARD HOOK AT TOP.
2. ESTIMATED PIER LENGTH "L" FOR INFORMATION AND ESTIMATING ONLY. ACTUAL DRILLED PIER LENGTHS REQUIRED TO ACHIEVE STATED LOAD CAPACITIES SHALL BE EVALUATED IN THE FIELD BY THE GEOTECHNICAL ENGINEER. SEE GEOTECHNICAL REPORT FOR FURTHER INFORMATION ON ESTIMATED PIER LENGTHS. SEE GEOTECHNICAL REPORT FOR LOAD TEST REQUIREMENTS.

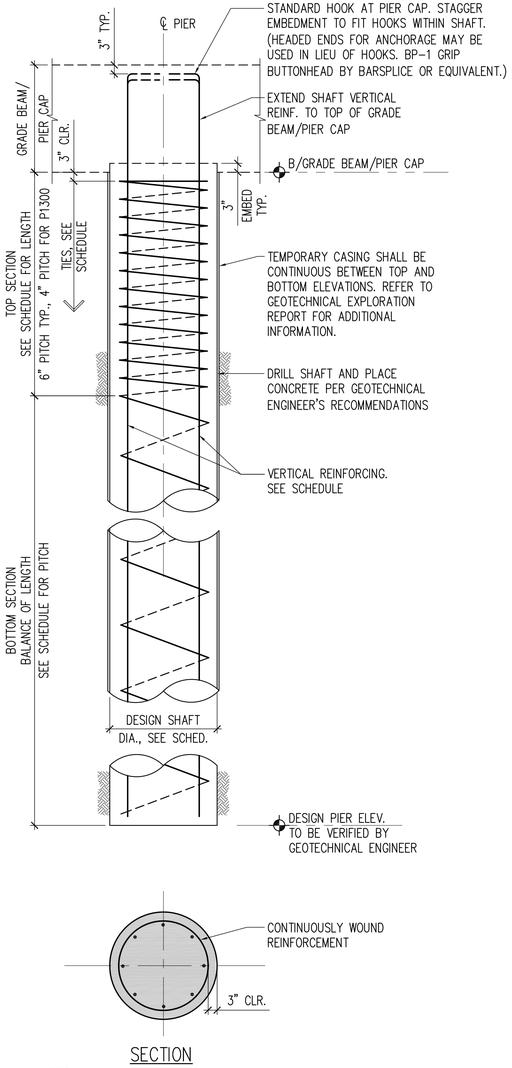

1 / S–3.1 TYPICAL DRILLED PIER
NOT TO SCALE

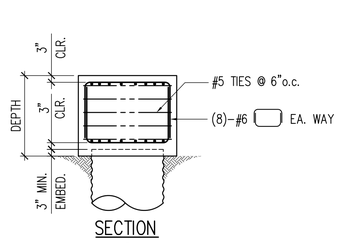

2 / S–3.1 ONE PIER CAP (PC1)
SCALE: 3/8" = 1'–0"

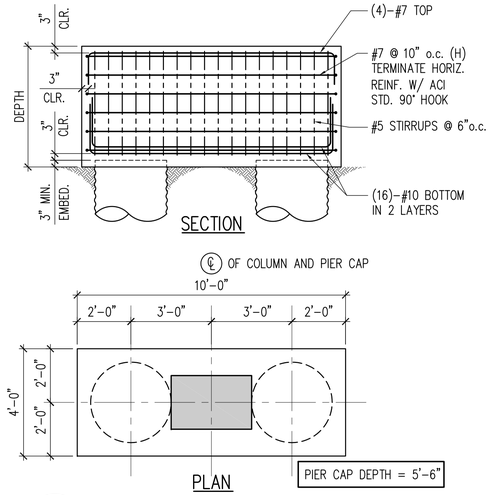

3 / S–3.1 TWO PIER CAP (PC2)
SCALE: 3/8" = 1'–0"

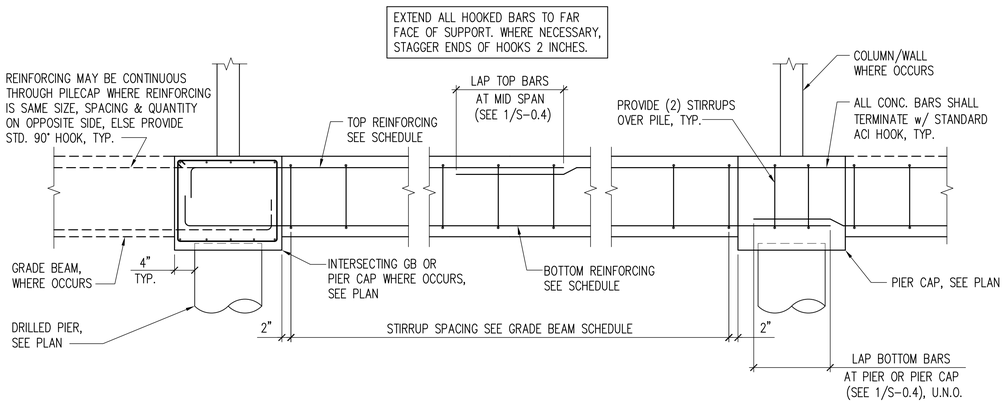

4 / S–3.1 TYPICAL GRADE BEAM ELEVATION
SCALE: NONE

GRADE BEAM SCHEDULE

BEAM MARK	SIZE (b"xd")	LONGITUDINAL REINFORCING			STIRRUPS	COMMENTS
		BOTTOM	TOP	SKIN REINF.		
GB1	44 x 24	(4) – #7	(4) – #7	–	#4 @ 16" o.c.	TYPICAL BEAM U.N.O.
GB2	44 x 24	(12) – #9 (IN 2 LAYERS)	(12) – #9 (IN 2 LAYERS)	–	#5 @ 4" o.c.	–
GB3	44 x 24	(9) – #9*	(9) – #9*	(1) – #7 E.F.	#4 @ 8" o.c.	* (12) – #9 FOR GB3 ALONG GRID 1 BTWN GRIDS C AND D
GB4	44 x 36	(14) – #9 (IN 2 LAYERS)	(14) – #9 (IN 2 LAYERS)	–	#5 @ 4" o.c.	–
GB5	44 x 42	(16) – #9 (IN 2 LAYERS)	(16) – #9 (IN 2 LAYERS)	(4) – #7 E.F.	#5 @ 4" o.c.	–
GB6	24 x 24	(4) – #7	(4) – #7	–	#4 @ 10" o.c.	–
GB7	12 x 66	(8) – #11 IN 3 LAYERS	(8) – #11 IN 3 LAYERS	(6) – #6	#5 @ 6" o.c.	–

5 / S–3.1 GRADE BEAM SCHEDULE
SCALE: NONE

REVISIONS

NO.	DATE	REVISIONS
.	.	.

STEVEN M. BALDRIDGE — LICENSED PROFESSIONAL ENGINEER — No. 7875-S — U.S.A. — HAWAII

THIS WORK WAS PREPARED BY ME OR UNDER MY SUPERVISION AND CONSTRUCTION OF THIS PROJECT WILL BE UNDER MY OBSERVATION, CHAPTER 16-115, DEPARTMENT OF COMMERCE AND CONSUMER AFFAIRS
EXP.
April 30, 2014

FOR BALDRIDGE & ASSOCIATES
STRUCTURAL ENGINEERING, INC.

KAKAAKO WORKFORCE HOUSING PER SUBCHAPTER 4 OF 2011 MAUKA PLAN AND RULES
801 SOUTH STREET
HONOLULU, HAWAII

TYPICAL FOUNDATION DETAILS

KAZU YATO, AIA & ASSOCIATES, INC.
2033 ROUNDTOP TERRACE
HONOLULU, HI 96822
TEL: (808) 945-0040
FAX: (808) 945-0041

DATE	DRAWN	CHECK	FILE
11/09/12	TD	SB	

SHEET

S-3.1

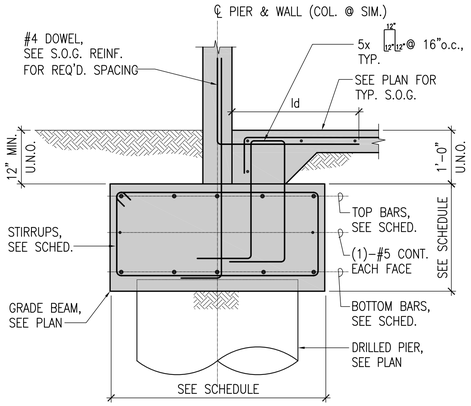

1 S-3.2 GRADE BEAM AT EXTERIOR WALL
SCALE: 3/4" = 1'-0"

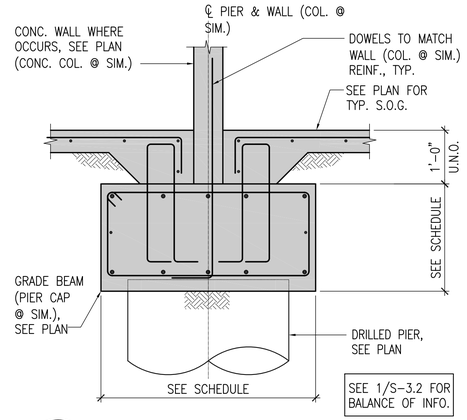

2 S-3.2 GRADE BEAM AT INTERIOR WALL
SCALE: 3/4" = 1'-0"

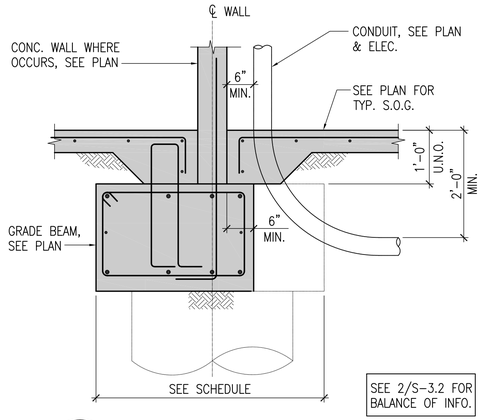

3 S-3.2 CONDUIT AT GRADE BEAM
SCALE: 3/4" = 1'-0"

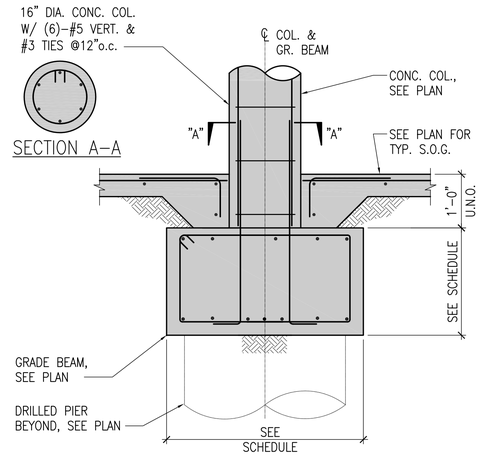

4 S-3.2 CONC. COL. AT GRADE BEAM
SCALE: 3/4" = 1'-0"

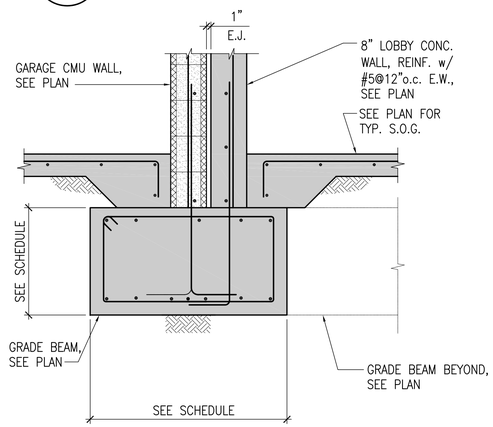

5 S-3.2 CONC. LOBBY WALL AT CMU WALL
SCALE: 3/4" = 1'-0"

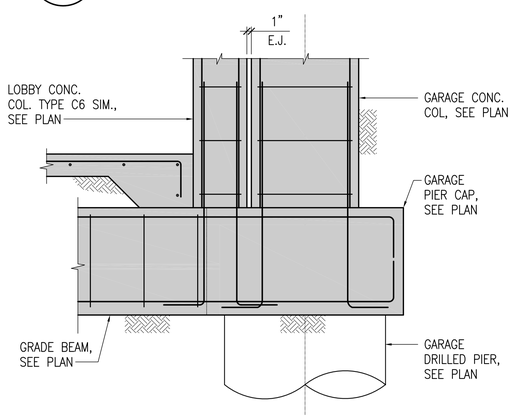

6 S-3.2 LOBBY COLUMN AT GARAGE COL.
SCALE: 3/4" = 1'-0"

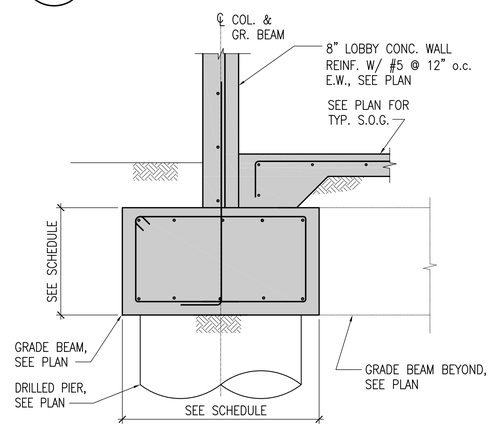

7 S-3.2 CONC. LOBBY WALL
SCALE: 3/4" = 1'-0"

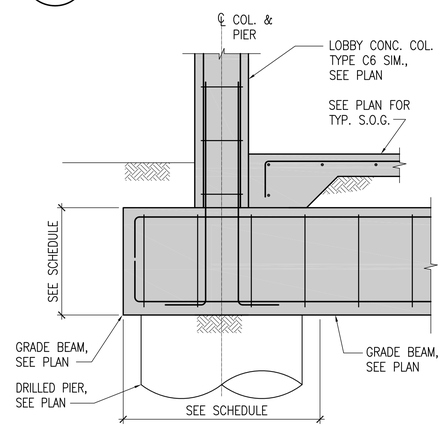

7 S-3.2 LOBBY CONC. COLUMN
SCALE: 3/4" = 1'-0"

REVISIONS

NO.	DATE	
.	.	.

STEVEN M. BALDRIDGE LICENSED PROFESSIONAL ENGINEER No. 7879-S HAWAII, U.S.A.

THIS WORK WAS PREPARED BY ME OR UNDER MY SUPERVISION AND COMPLIES WITH DCCA REQUIREMENTS. IT WILL BE UNDER MY OBSERVATION. CHAPTER 16-115, DEPARTMENT OF COMMERCE AND CONSUMER AFFAIRS
EXP. April 30, 2014

FOR BALDRIDGE & ASSOCIATES
STRUCTURAL ENGINEERING, INC.

KAKAAKO WORKFORCE HOUSING PER
SUBCHAPTER 4 OF 2011 MAUKA PLAN AND RULES
801 SOUTH STREET
HONOLULU, HAWAII

FOUNDATION SECTIONS & DETAILS

KAZU YATO, AIA & ASSOCIATES,INC.
2033 ROUNDTOP TERRACE
HONOLULU, HI 96822
TEL: (808) 945-0040
FAX: (866) 945-0041

DATE	DRAWN	CHECK	FILE
11/05/12	TD	SB	

SHEET

S-3.2

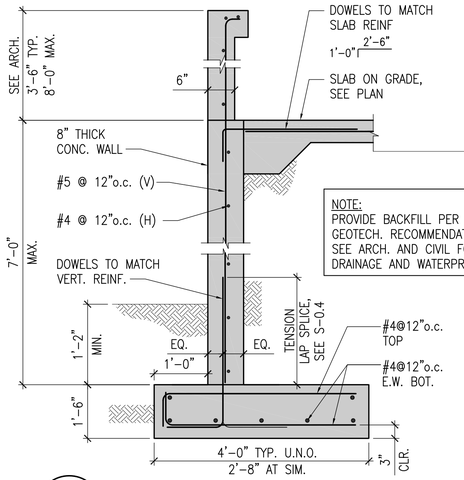

1 S-3.3 RETAINING WALL SECTION
SCALE: 3/4" = 1'-0"

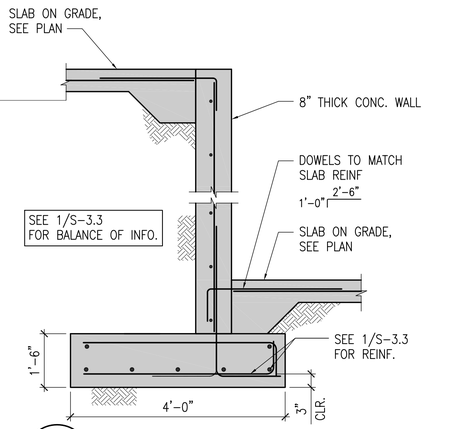

2 S-3.3 RETAINING WALL SECTION
SCALE: 3/4" = 1'-0"

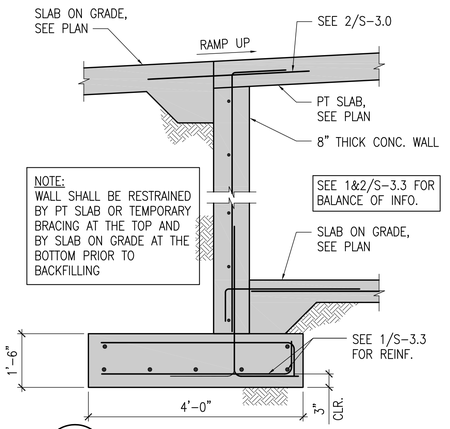

3 S-3.3 RAMP END WALL SECTION
SCALE: 3/4" = 1'-0"

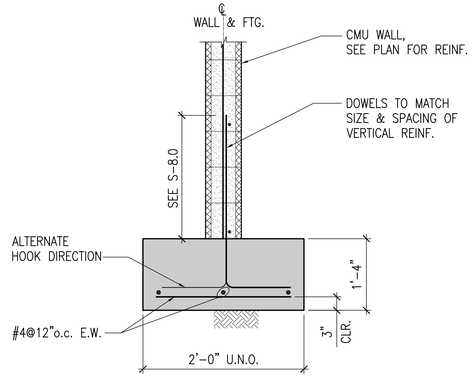

4 S-3.3 TYP. CMU WALL AT FOOTING
SCALE: 3/4" = 1'-0"

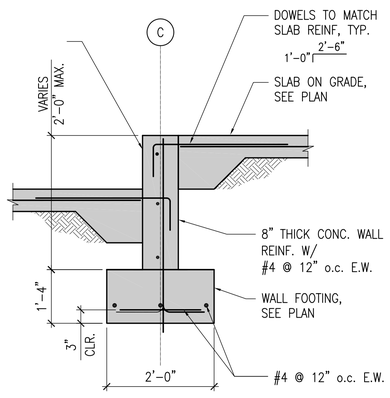

5 S-3.3 RAMP SECTION AT GRIDS 3-4
SCALE: 3/4" = 1'-0"

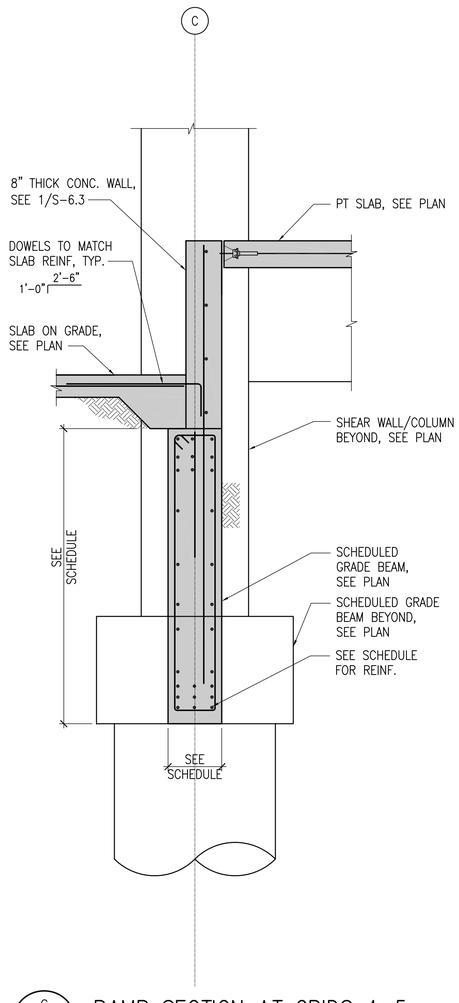

6 S-3.3 RAMP SECTION AT GRIDS 4-5
SCALE: 3/4" = 1'-0"

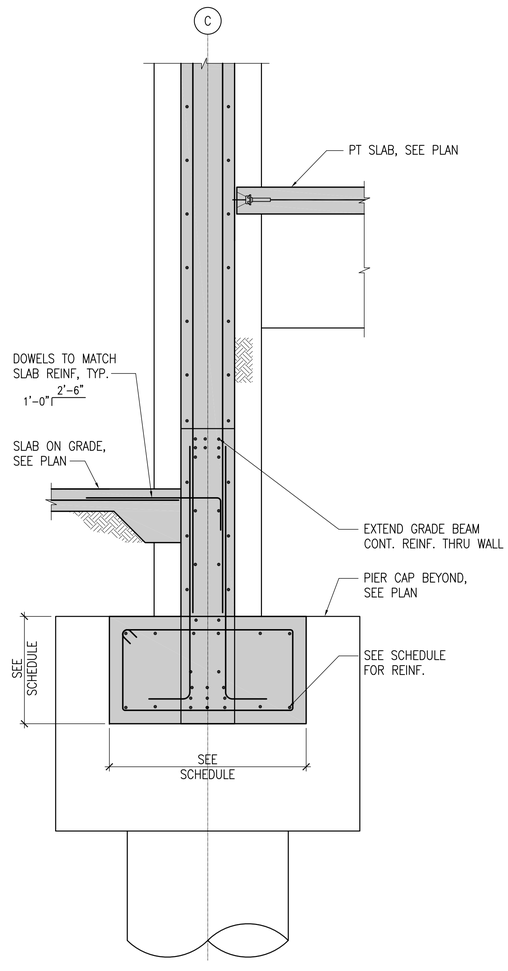

7 S-3.3 RAMP SECTION AT GRIDS 5-6
SCALE: 3/4" = 1'-0"

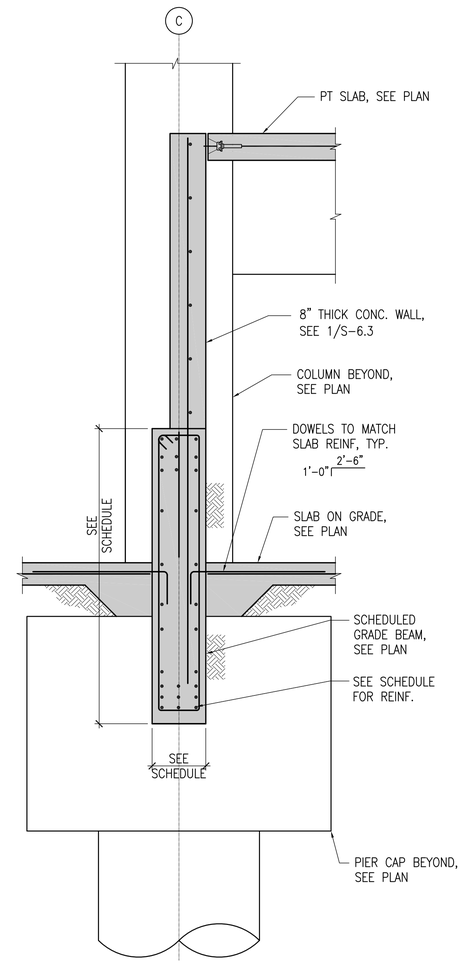

8 S-3.3 RAMP SECTION AT GRIDS 6-7
SCALE: 3/4" = 1'-0"

REVISIONS

NO.	DATE	
.	.	.

STEVEN M. BALDRIDGE LICENSED PROFESSIONAL ENGINEER No. 7675-S HAWAII, U.S.A.

THIS WORK WAS PREPARED BY ME OR UNDER MY SUPERVISION AND CONSTRUCTION OF THIS PROJECT WILL BE UNDER MY OBSERVATION, CHAPTER 16-115, DEPARTMENT OF COMMERCE AND CONSUMER AFFAIRS
EXP. April 30, 2014

FOR BALDRIDGE & ASSOCIATES
STRUCTURAL ENGINEERING, INC.

KAKAAKO WORKFORCE HOUSING PER
SUBCHAPTER 4 OF 2011 MAUKA PLAN AND RULES
801 SOUTH STREET
HONOLULU, HAWAII

GARAGE FOUNDATION SECTIONS & DETAILS

KAZU YATO, AIA & ASSOCIATES,INC.
2033 ROUNDTOP TERRACE
HONOLULU, HI 96822
TEL: (808) 945-0340
FAX: (808) 946-0341

DATE	DRAWN	CHECK	FILE
11/08/12	TD	SB	

SHEET

S-3.3

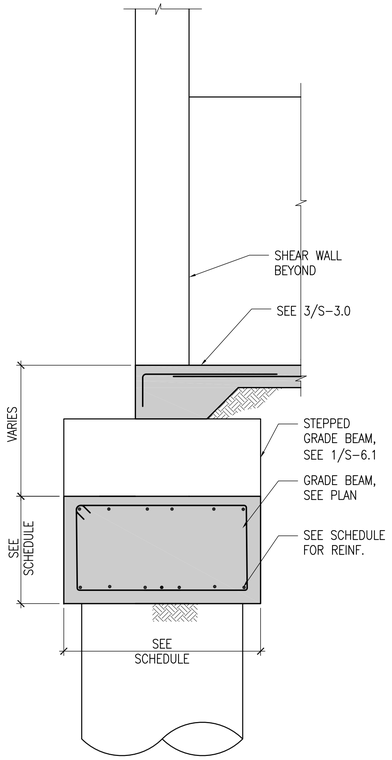

1 S-3.4 GRIDS D-C AT SLAB
SCALE: 3/4" = 1'-0"

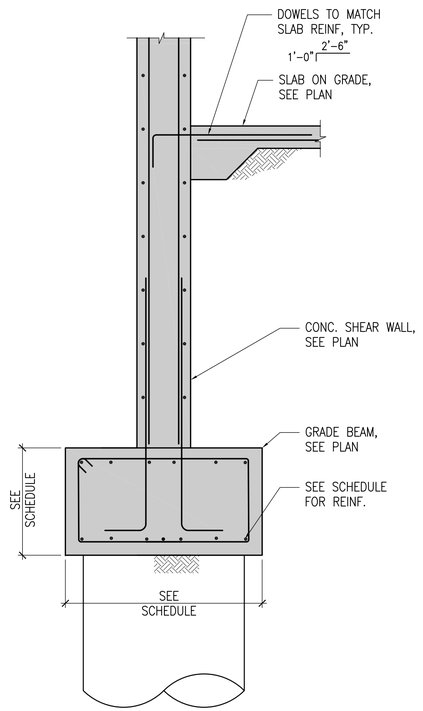

2 S-3.4 GRIDS D-C AT SHEAR WALL
SCALE: 3/4" = 1'-0"

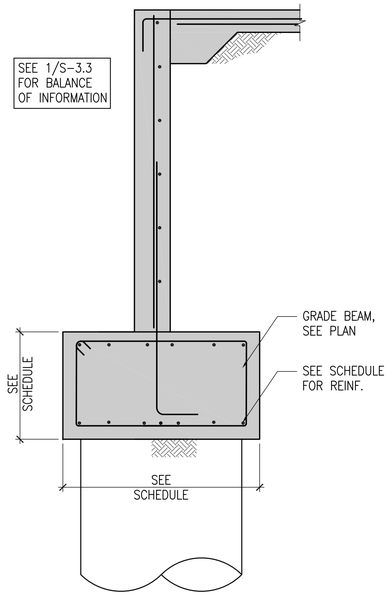

3 S-3.4 GRIDS C-B AT RETAINING WALL
SCALE: 3/4" = 1'-0"

NO.	DATE	REVISIONS
.	.	.

STEVEN M. BALDRIDGE
LICENSED PROFESSIONAL ENGINEER
No. 7875-S
HAWAII, U.S.A.

THIS WORK WAS PREPARED BY ME OR UNDER MY SUPERVISION AND CONSTRUCTION OF THIS PROJECT WILL BE UNDER MY OBSERVATION, CHAPTER 16-115, DEPARTMENT OF COMMERCE AND CONSUMER AFFAIRS
EXP.
April 30, 2014

FOR BALDRIDGE & ASSOCIATES
STRUCTURAL ENGINEERING, INC.

KAKAAKO WORKFORCE HOUSING PER
SUBCHAPTER 4 OF 2011 MAUKA PLAN AND RULES
801 SOUTH STREET
HONOLULU, HAWAII

GARAGE FOUNDATION SECTIONS & DETAILS

KAZU YATO, AIA & ASSOCIATES, INC.
2033 ROUNDTOP TERRACE
HONOLULU, HI 96822
TEL: (808) 845-0040
FAX: (808) 845-0041

DATE	DRAWN	CHECK	FILE
11/08/12	TD	SB	

SHEET

S-3.4

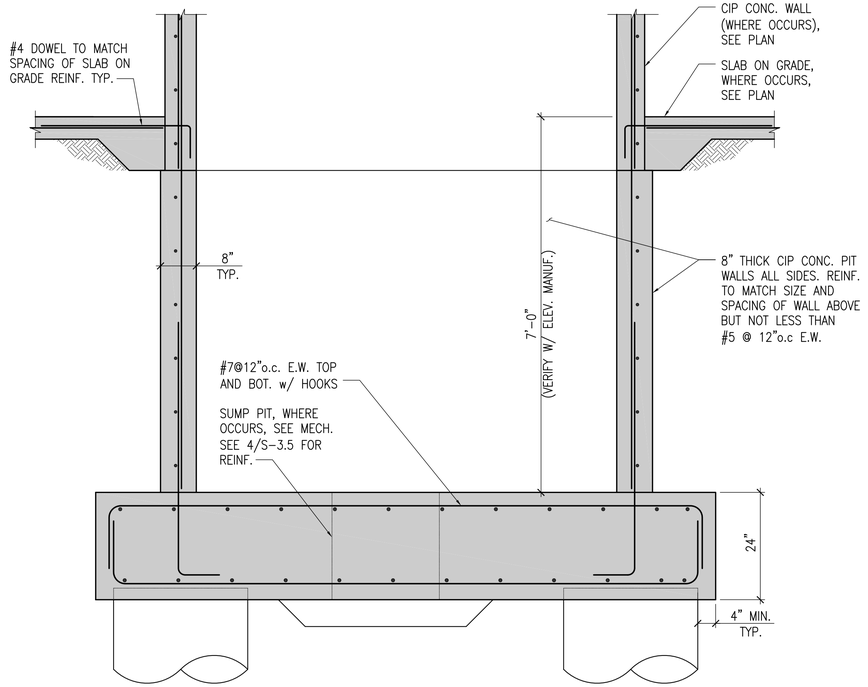

1 S-3.5 TOWER ELEVATOR PIT SECTION
SCALE: 3/4" = 1'-0"

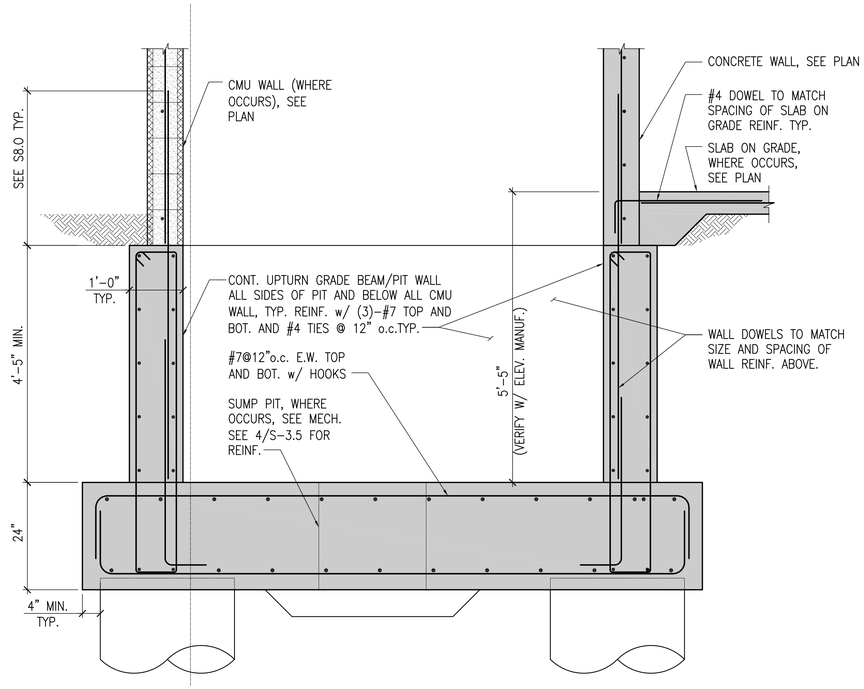

2 S-3.5 GARAGE ELEVATOR PIT SECTION
SCALE: 3/4" = 1'-0"

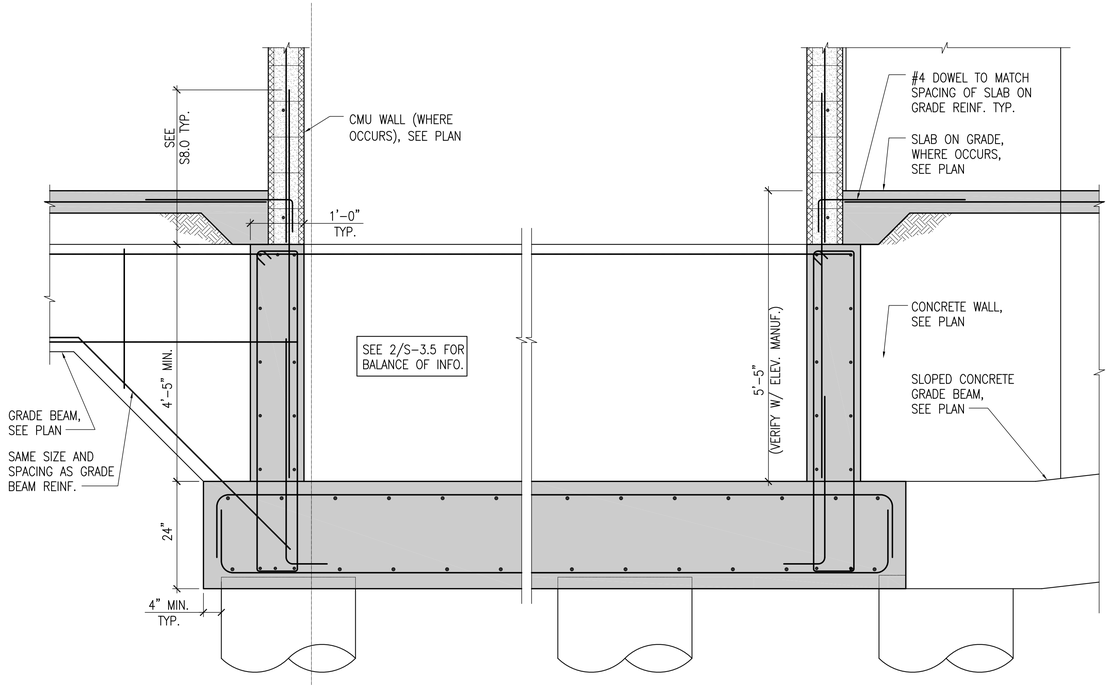

3 S-3.5 GARAGE ELEVATOR PIT SECTION
SCALE: 3/4" = 1'-0"

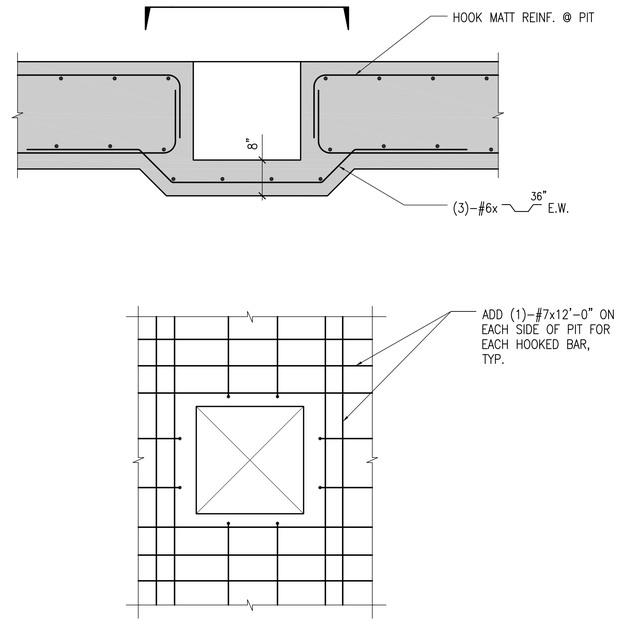

4 S-3.5 SUMP PIT DETAIL
SCALE: 3/4" = 1'-0"

REVISIONS

NO.	DATE	
.	.	

STEVEN M. BALDRIDGE LICENSED PROFESSIONAL ENGINEER No. 7675-S U.S.A. HAWAII

THIS WORK WAS PREPARED BY ME OR UNDER MY SUPERVISION AND CONSTRUCTION OF THIS PROJECT WILL BE UNDER MY OBSERVATION, CHAPTER 16-115, DEPARTMENT OF COMMERCE AND CONSUMER AFFAIRS
EXP. April 30, 2014

FOR BALDRIDGE & ASSOCIATES
STRUCTURAL ENGINEERING, INC.

KAKAAKO WORKFORCE HOUSING PER
SUBCHAPTER 4 OF 2011 MAUKA PLAN AND RULES
801 SOUTH STREET
HONOLULU, HAWAII

ELEVATOR PIT SECTIONS & DETAILS

KAZU YATO, AIA & ASSOCIATES,INC.
2033 ROUNDTOP TERRACE
HONOLULU, HI 96822
TEL: (808) 845-0040
FAX: (808) 845-0041

DATE	DRAWN	CHECK	FILE
11/08/12	TD	SB	

SHEET

S-3.5

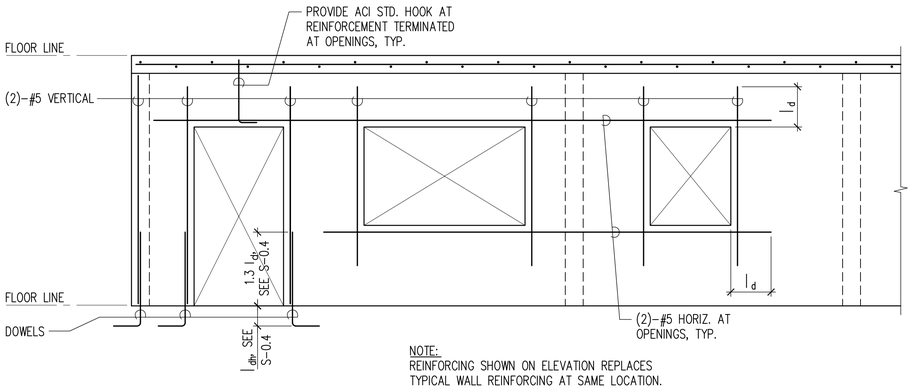

NOTE:
REINFORCING SHOWN ON ELEVATION REPLACES TYPICAL WALL REINFORCING AT SAME LOCATION.

1 / S–4.0 MINIMUM WALL OPENING REINFORCING
NOT TO SCALE

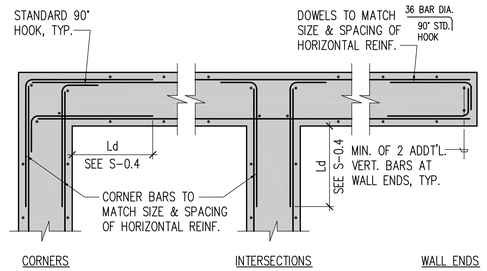

PLAN

2 / S–4.0 TYP. WALL DET. (DBL. CURTAIN)
NOT TO SCALE

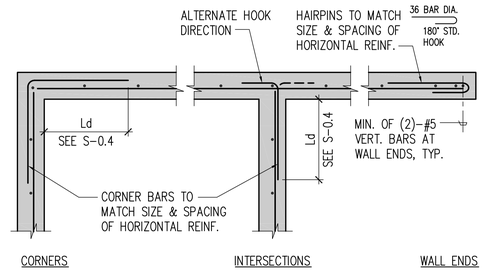

PLAN

3 / S–4.0 TYP. WALL DET. (SINGLE CURTAIN)
NOT TO SCALE

4 / S–4.0 WALL DETAIL AT $l_w \leq 4'–3"$
SCALE: 3/4" = 1'–0"

5 / S–4.0 PIER DETAIL AT GRIDS A & E
SCALE: 3/4" = 1'–0"

REVISIONS

NO.	DATE	
.	.	.

STEVEN M. BALDRIDGE — LICENSED PROFESSIONAL ENGINEER — No. 7879-S — U.S.A.

THIS WORK WAS PREPARED BY ME OR UNDER MY SUPERVISION AND CONSISTENT WITH MY RESPONSIBILITY WILL BE UNDER MY OBSERVATION, CHAPTER 16-115, DEPARTMENT OF COMMERCE AND CONSUMER AFFAIRS
EXP. April 30, 2014

FOR BALDRIDGE & ASSOCIATES
STRUCTURAL ENGINEERING, INC.

KAKAAKO WORKFORCE HOUSING PER
SUBCHAPTER 4 OF 2011 MAUKA PLAN AND RULES
801 SOUTH STREET
HONOLULU, HAWAII

TOWER WALL DETAILS

KAZU YATO, AIA & ASSOCIATES,INC.
2033 ROUNDTOP TERRACE
HONOLULU, HI 96822
TEL: (808) 945-0040
FAX: (808) 945-0041

DATE	DRAWN	CHECK	FILE
11/09/12	TD	SB	

SHEET

S-4.0

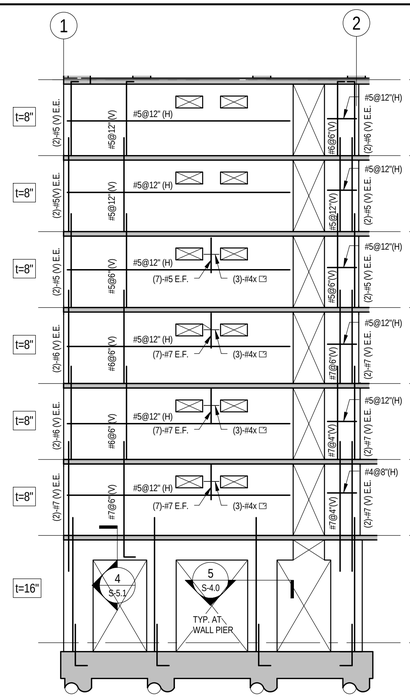

WALL 1

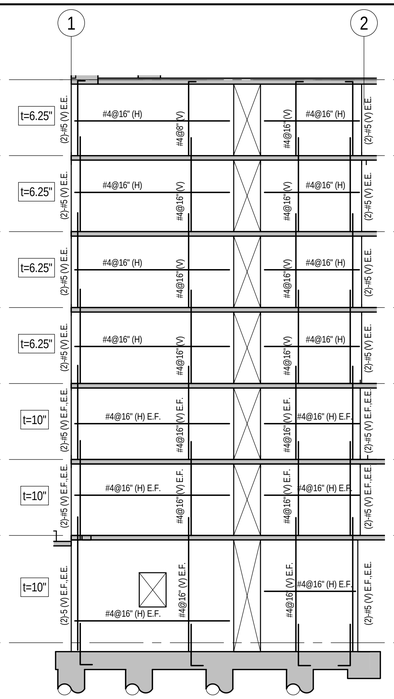

WALL 2

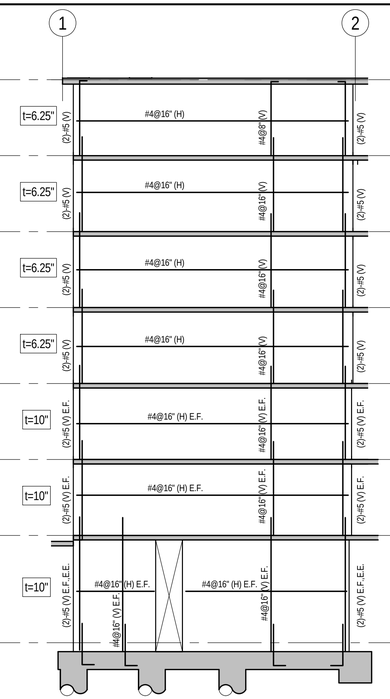

WALL 3

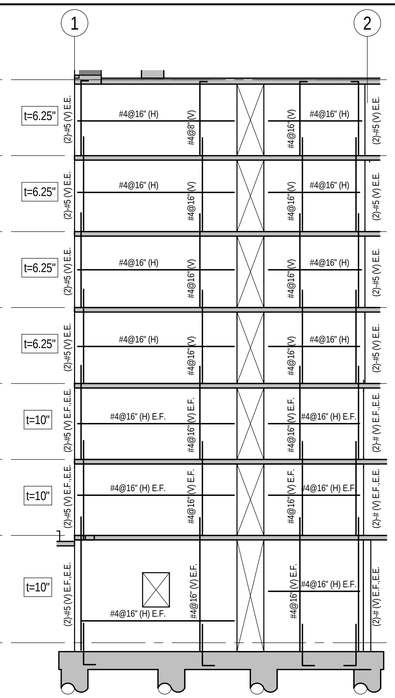

WALL 4

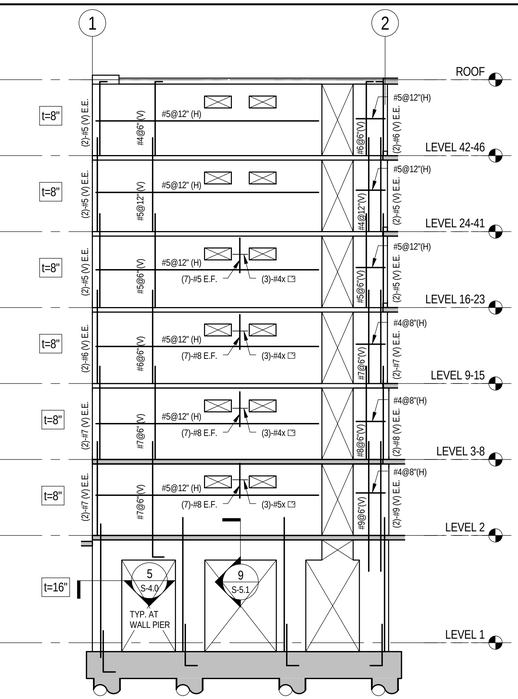

WALL 5

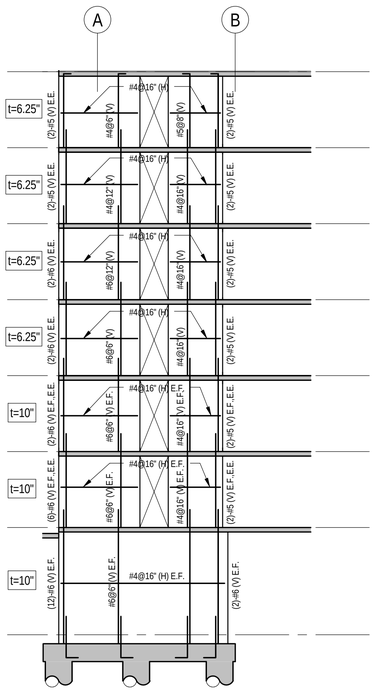

WALL 6

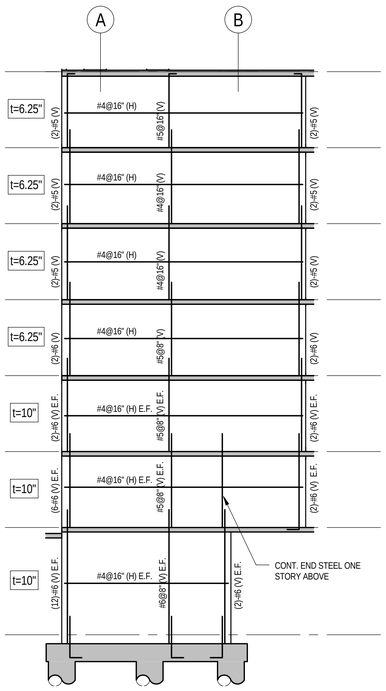

WALL 7

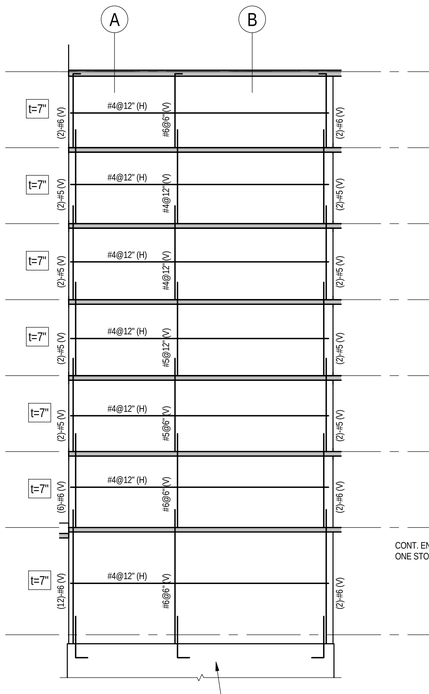

WALL 8

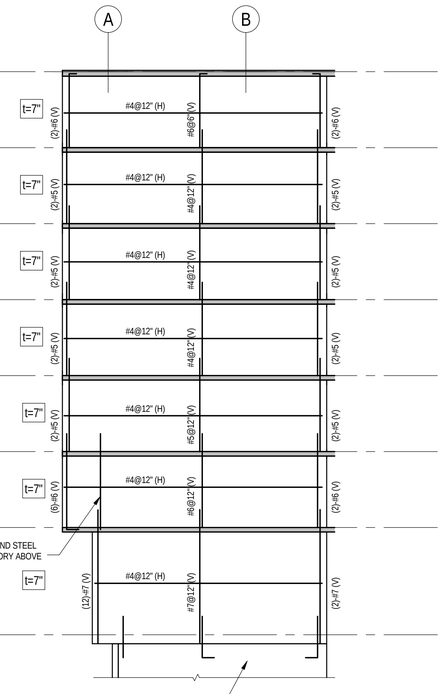

WALL 9

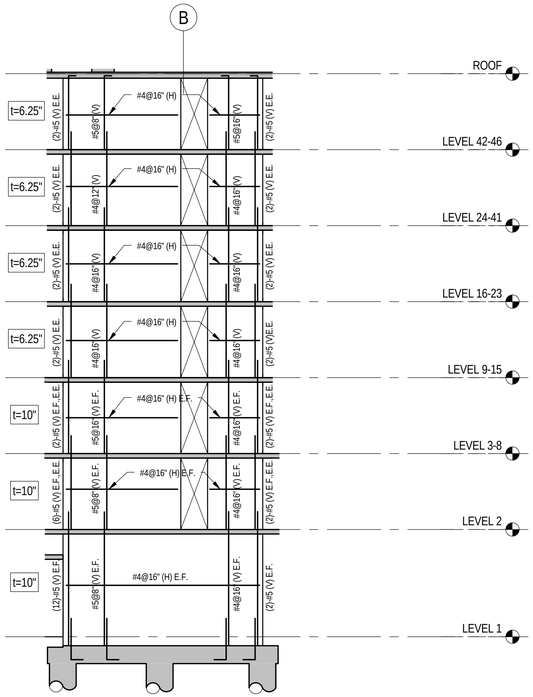

WALL 10

REVISIONS

NO.	DATE

STEVEN M. BALDRIDGE
LICENSED PROFESSIONAL ENGINEER
No. 7876-S
HAWAII, U.S.A.

THIS WORK WAS PREPARED BY ME OR UNDER MY SUPERVISION AND COMPLIES WITH STATE LAW AND WILL BE UNDER MY OBSERVATION. CHAPTER 16-115, DEPARTMENT OF COMMERCE AND CONSUMER AFFAIRS

EXP. APRIL 30, 2014

FOR BALDRIDGE & ASSOCIATES
STRUCTURAL ENGINEERING, INC.

KAKAAKO WORKFORCE HOUSING

PER SUBCHAPTER 4 OF 2011 MAUKA PLAN AND RULES

801 SOUTH STREET
HONOLULU, HAWAII

TOWER WALL ELEVATIONS

KAZU YATO, AIA & ASSOCIATES, INC.
2033 ROOFTOP TERRACE
HONOLULU, HI 96822
TEL: (808) 945-0343
FAX: (808) 945-0944

DATE	DRAWN	CHECK	FILE
11/08/12	TD	SB	

SHEET

S-4.1

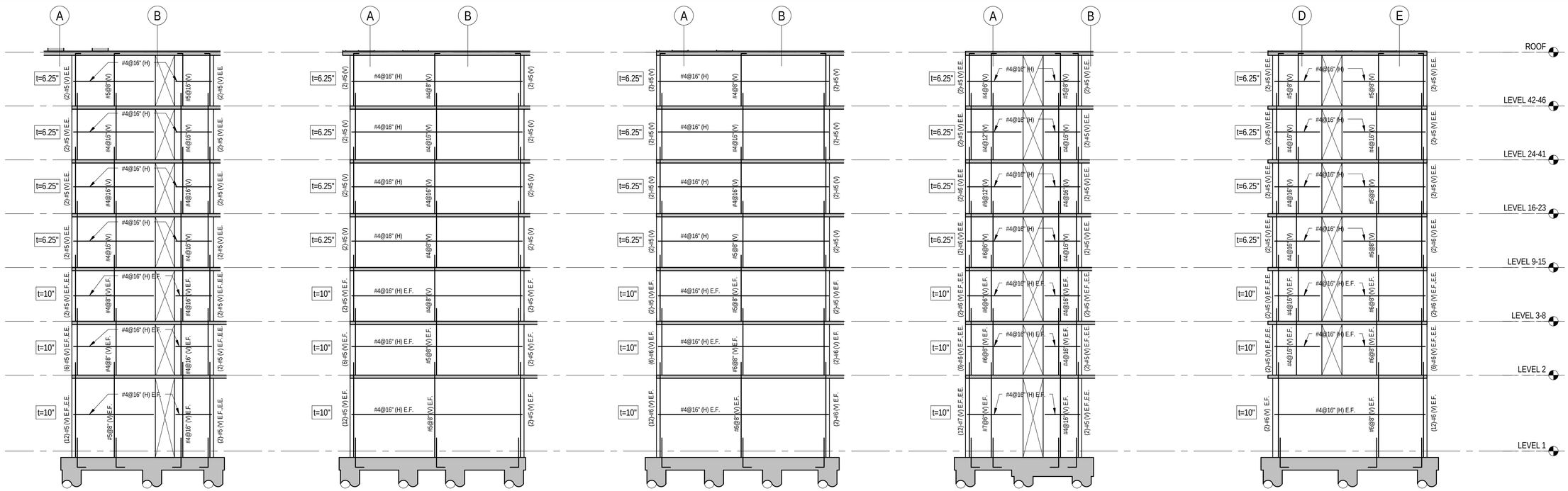

WALL 11

WALL 12

WALL 13

WALL 14

WALL 15

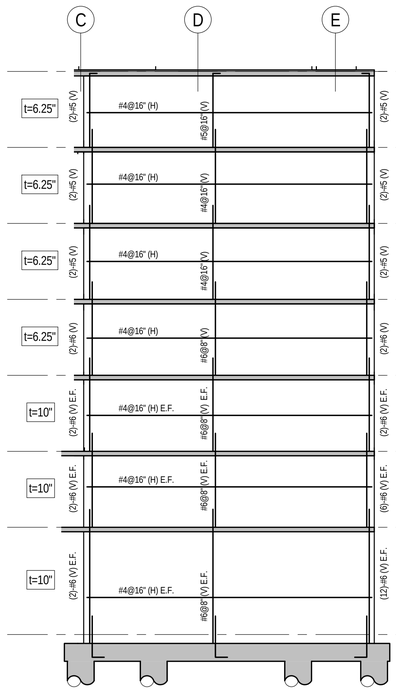

WALL 16

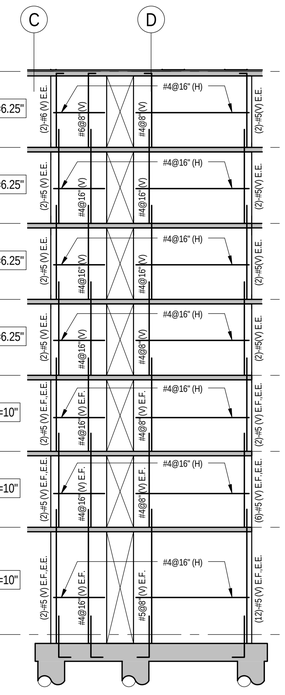

WALL 17

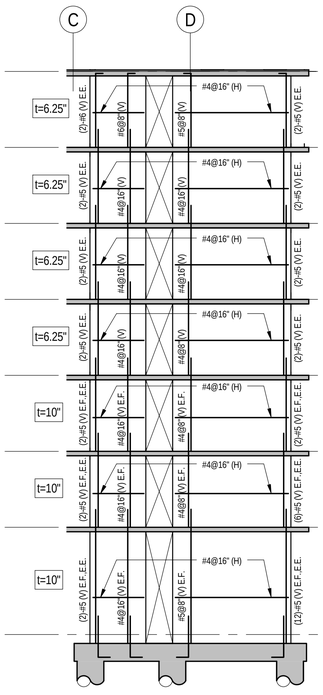

WALL 18

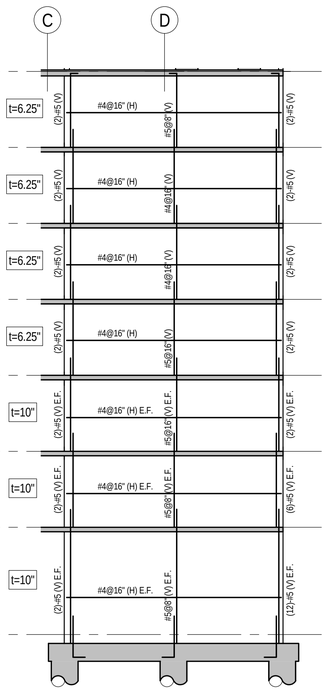

WALL 19

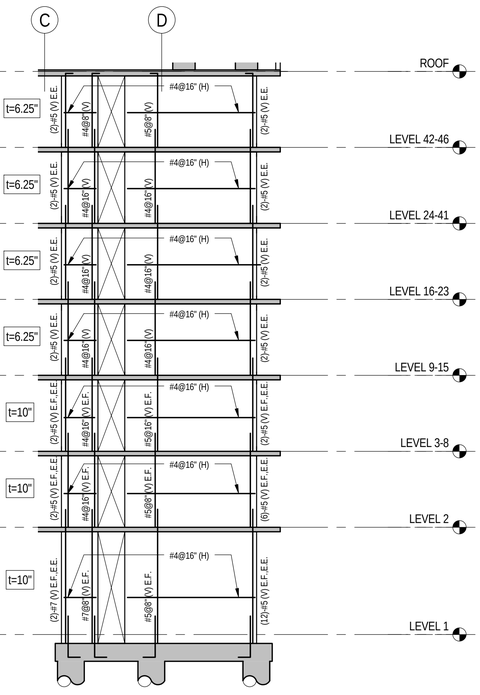

WALL 20

REVISIONS

NO.	DATE

STEVEN M. BALDRIDGE * LICENSED PROFESSIONAL ENGINEER * No. 7874-S * HAWAII, U.S.A.

THIS WORK WAS PREPARED BY ME OR UNDER MY SUPERVISION AND CONTROL AND I ACCEPT RESPONSIBILITY WILL BE UNDER MY OBSERVATION. CHAPTER 16-115, DEPARTMENT OF COMMERCE AND CONSUMER AFFAIRS

EXP. APRIL 30, 2014

FOR BALDRIDGE & ASSOCIATES
STRUCTURAL ENGINEERING, INC.

KAKAAKO WORKFORCE HOUSING

PER SUBCHAPTER 4 OF 2011 MAUKA PLAN AND RULES

801 SOUTH STREET
HONOLULU, HAWAII

TOWER WALL ELEVATIONS

KAZU YATO, AIA & ASSOCIATES, INC.
2033 ROUNDTOP TERRACE
HONOLULU, HI 96822
TEL: (808) 945-0343
FAX: (808) 945-0344

DATE	DRAWN	CHECK	FILE
11/08/12	TD	SB	

SHEET

S-4.2

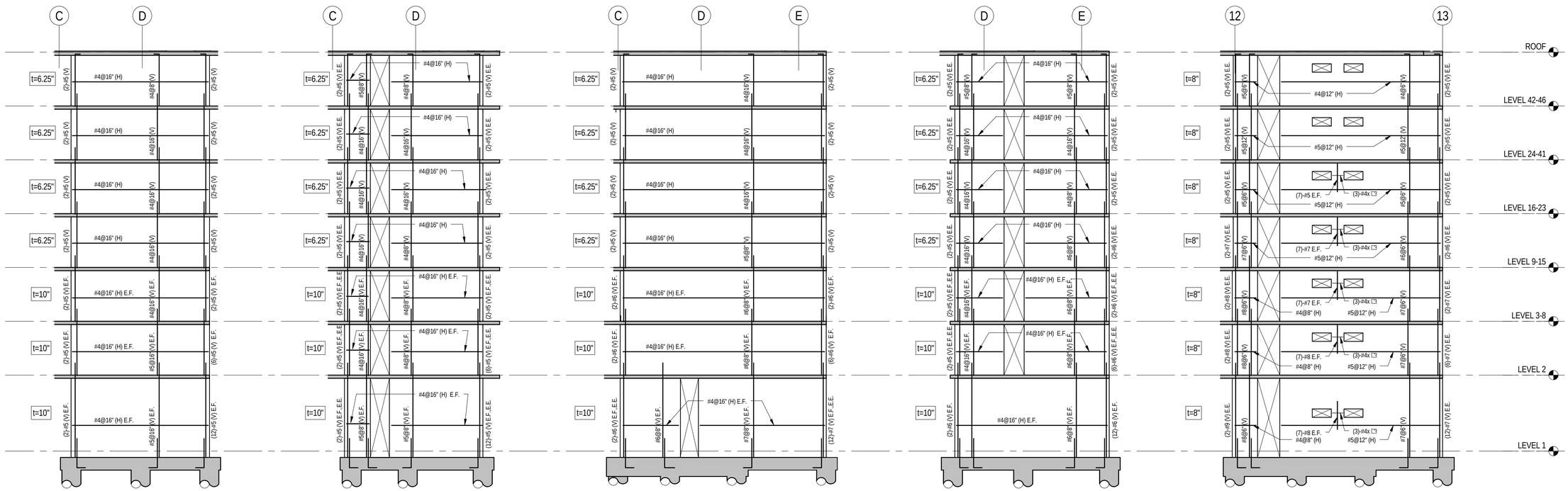

WALL 21 WALL 22 WALL 23 WALL 24 WALL 25

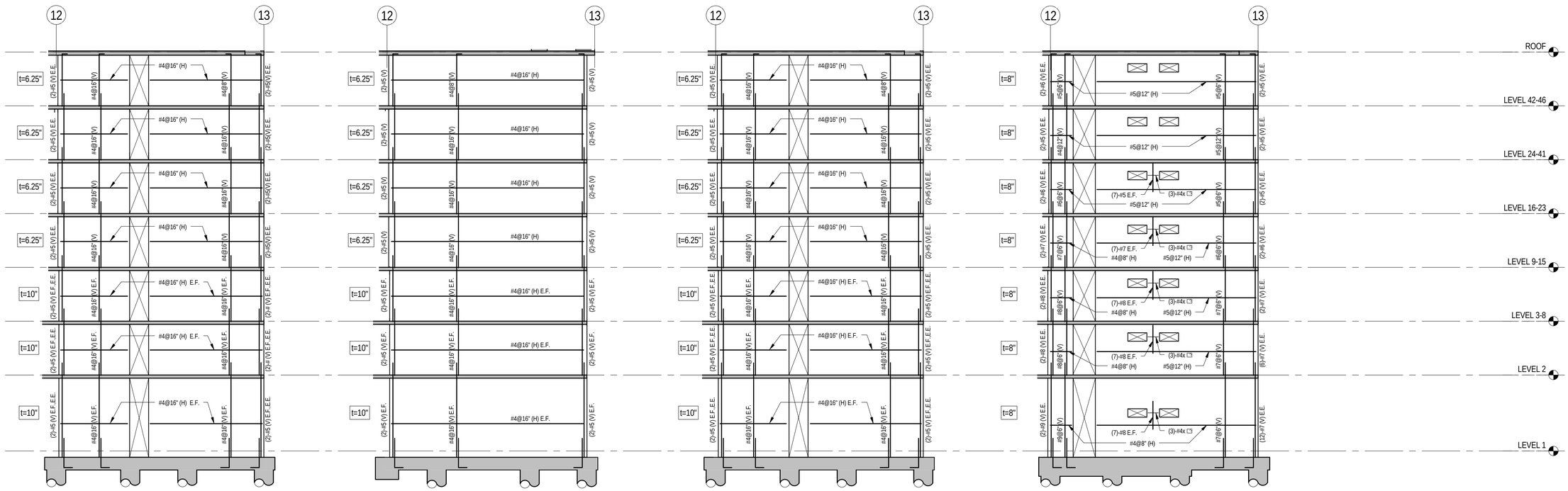

WALL 26 WALL 27 WALL 28 WALL 29

REVISIONS

NO.	DATE

STEVEN M. BALDRIDGE ★ U.S.A. ★ HAWAII ★ LICENSED PROFESSIONAL ENGINEER No. 7876-S

THIS WORK WAS PREPARED BY ME OR UNDER MY SUPERVISION AND CONSTITUTES THE EXTENT OF THE WORK WHICH WILL BE UNDER MY OBSERVATION. CHAPTER 16-115, DEPARTMENT OF COMMERCE AND CONSUMER AFFAIRS

EXP. APRIL 30, 2014

FOR BALDRIDGE & ASSOCIATES
STRUCTURAL ENGINEERING, INC.

KAKAAKO WORKFORCE HOUSING
PER SUBCHAPTER 4 OF 2011 MAUKA PLAN AND RULES

801 SOUTH STREET
HONOLULU, HAWAII

TOWER WALL ELEVATIONS

KAZU YATO, AIA & ASSOCIATES,INC.
2033 ROUNDTOP TERRACE
HONOLULU, HI 96822
TEL: (808) 945-0343
FAX: (808) 945-0944

DATE	DRAWN	CHECK	FILE
11/08/12	TD	SB	

SHEET

S-4.3

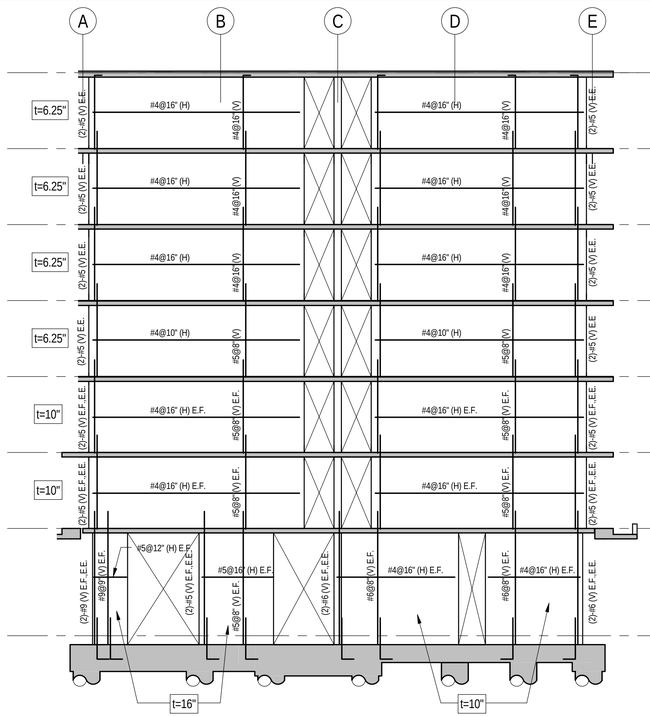

WALL 30

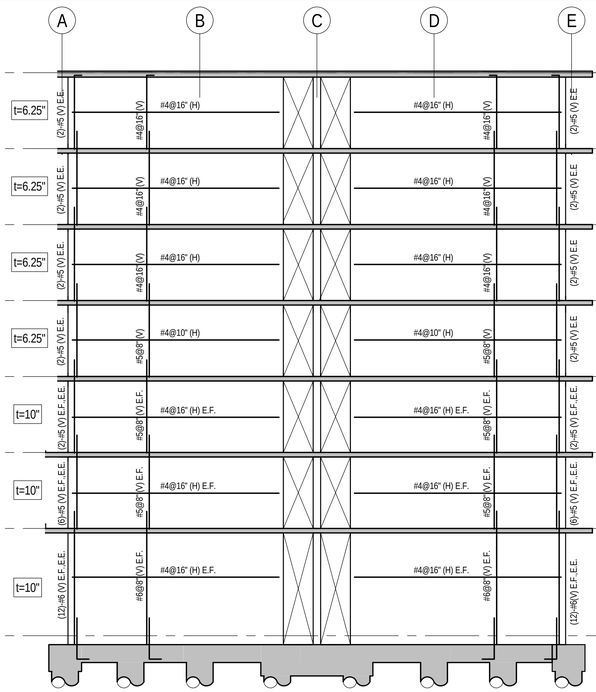

WALL 31

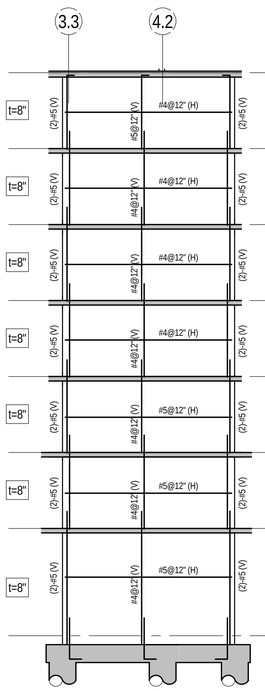

WALL 32

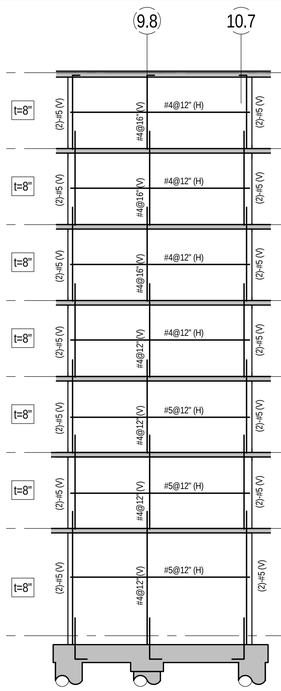

WALL 33

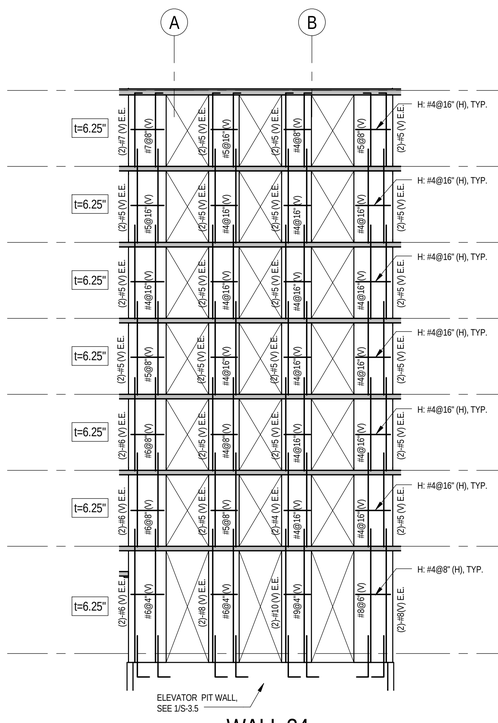

WALL 34

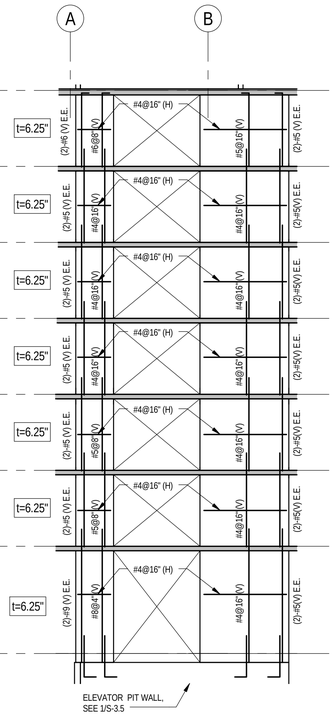

WALL 35

NO.	DATE	REVISONS

STEVEN M. BALDRIDGE ★ U.S.A. ★ HAWAII ★ LICENSED PROFESSIONAL ENGINEER No. 7876-S

THIS WORK WAS PREPARED BY ME OR UNDER MY SUPERVISION AND CONSTITUTES THE ENGINEERING WORK THAT WILL BE UNDER MY OBSERVATION. CHAPTER 16-115, DEPARTMENT OF COMMERCE AND CONSUMER AFFAIRS

EXP. APRIL 30, 2014

FOR BALDRIDGE & ASSOCIATES
STRUCTURAL ENGINEERING, INC.

KAKAAKO WORKFORCE HOUSING

PER SUBCHAPTER 4 OF 2011 MAUKA PLAN AND RULES

801 SOUTH STREET
HONOLULU, HAWAII

TOWER WALL ELEVATIONS

KAZU YATO, AIA & ASSOCIATES,INC.
2033 ROUNDTOP TERRACE
HONOLULU, HI 96822
TEL: (808) 945-0043
FAX: (808) 945-0044

DATE	DRAWN	CHECK	FILE
11/08/12	TD	SB	

SHEET

S-4.4

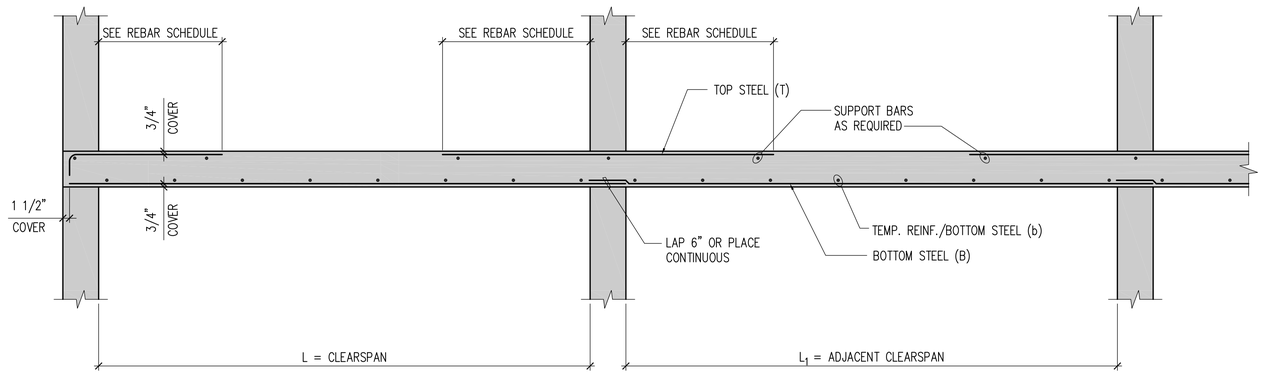

1 S-5.0 TYPICAL SLAB REINFORCING DETAIL

SCALE: NONE

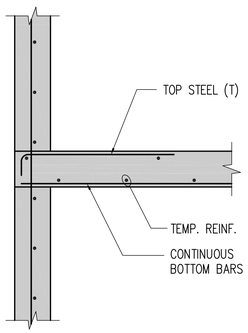

2 S-5.0 TYP. END SLAB REINF. DETAIL

SCALE: NONE

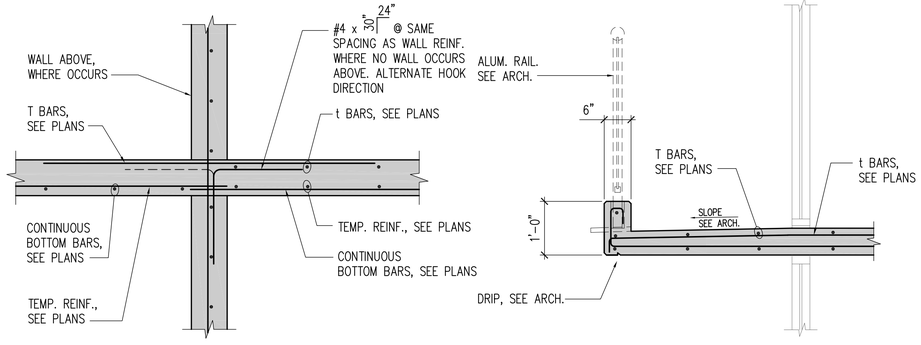

3 S-5.0 INTERIOR SLAB REINF. DETAIL @ REINF. DIRECTION CHANGE

SCALE: NONE

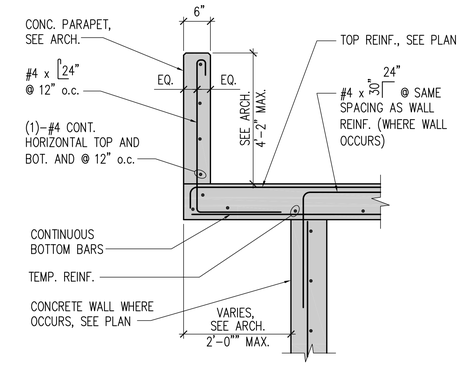

4 S-5.0 TYP. LANAI SLAB DETAIL

SCALE: NONE

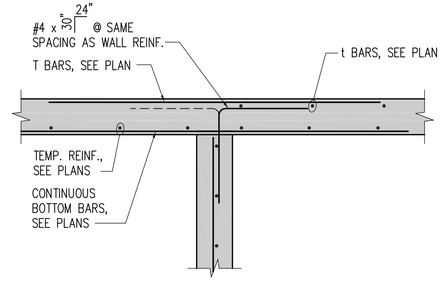

5 S-5.0 END SLAB REINF. DETAIL @ ROOF

SCALE: NONE

6 S-5.0 INTERIOR SLAB REINF. DETAIL @ ROOF

SCALE: NONE

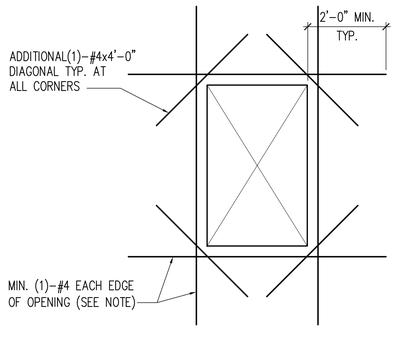

ALL SLAB BARS INTERRUPTED BY OPENING SHALL BE REPLACED BY ADDITIONAL REINFORCEMENT EQUAL TO THAT WHICH HAS BEEN INTERRUPTED. PLACE HALF OF THE ADDITIONAL REINFORCEMENT ON EACH SIDE OF THE OPENING AND EXTEND BARS THE SAME LENGTH REQUIRED FOR THE UNINTERRUPTED BARS.

7 S-5.0 TYP. SLAB OPENING DETAIL

SCALE: NONE

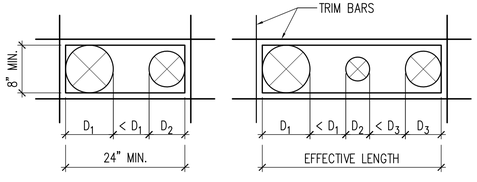

NOTES:

INSERTS WHICH ARE CLOSER TO ONE ANOTHER THAN THE DIAMETER OF THE LARGER OF THE TWO ARE CONSIDERED TO FORM A COMBINED OPENING.

1. IF THE COMBINED OPENING IS LESS THAN 12", NO TRIM BARS ARE REQ'D.
2. IF THE COMBINED OPENING IS MORE THAN 12", BUT LESS THAN 24", PROVIDE (1)-#5 T&B WITH 1'-0" EMBEDMENT PAST THE OPENING.
3. NO DIAGONAL BARS ARE NECESSARY.
4. IF COMBINED OPENING IS LARGER THAN 24" REFER TO 7/S-5.0.

8 S-5.0 TYP. TRIM BARS FOR MULTIPLE OPENINGS IN SLAB

SCALE: NONE

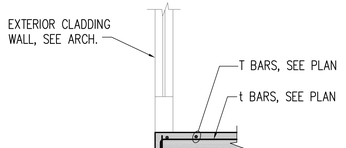

9 S-5.0 TYP. SLAB EDGE DETAIL

SCALE: NONE

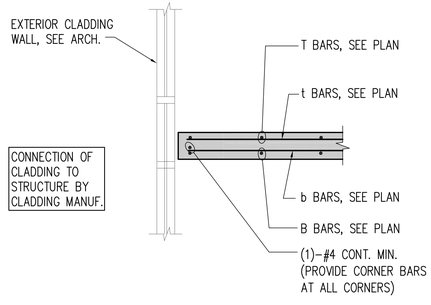

10 S-5.0 TYP. SLAB EDGE AT ELEV. LOBBY

SCALE: NONE

REVISIONS

NO.	DATE	
.	.	.

STEVEN M. BALDRIDGE LICENSED PROFESSIONAL ENGINEER No. 7879-S HAWAII, U.S.A.

THIS WORK WAS PREPARED BY ME OR UNDER MY SUPERVISION AND CONSISTS OF PAGES FOR THIS PROJECT. WILL BE UNDER MY OBSERVATION, CHAPTER 16-115, DEPARTMENT OF COMMERCE AND CONSUMER AFFAIRS

EXP. April 30, 2014

FOR BALDRIDGE & ASSOCIATES STRUCTURAL ENGINEERING, INC.

KAKAAKO WORKFORCE HOUSING PER
SUBCHAPTER 4 OF 2011 MAUKA PLAN AND RULES
801 SOUTH STREET
HONOLULU, HAWAII

TOWER SLAB & FRAMING DETAILS

KAZU YATO, AIA & ASSOCIATES, INC.
2033 ROUNDTOP TERRACE
HONOLULU, HI 96822
TEL: (808) 845-0040
FAX: (808) 845-0041

DATE	DRAWN	CHECK	FILE
11/08/12	TD	SB	

SHEET

S-5.0

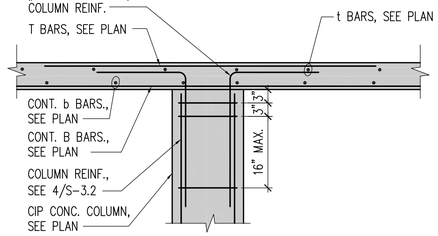

1 S-5.1 TOP OF LOBBY COLUMN AT ROOF
SCALE: NONE

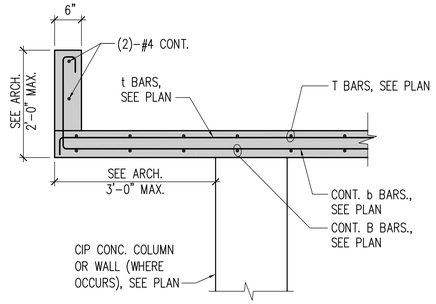

2 S-5.1 SLAB EDGE AT LOBBY ROOF
SCALE: NONE

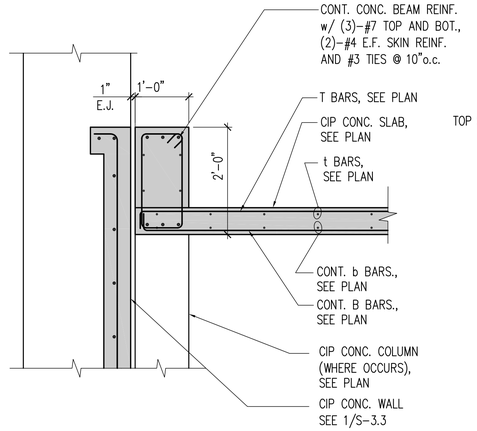

3 S-5.1 LOBBY ROOF AT PARKING
SCALE: NONE

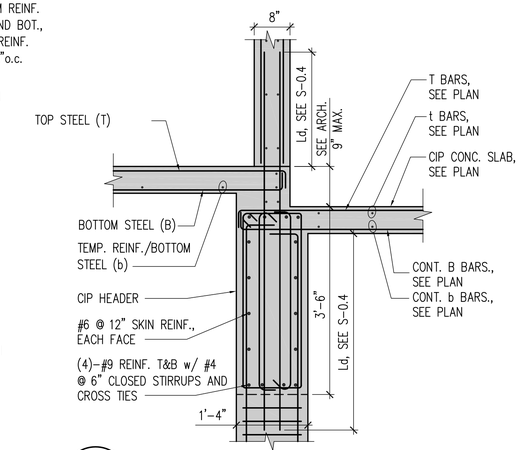

4 S-5.1 SLAB STEP AT CONC WALL
SCALE: NONE

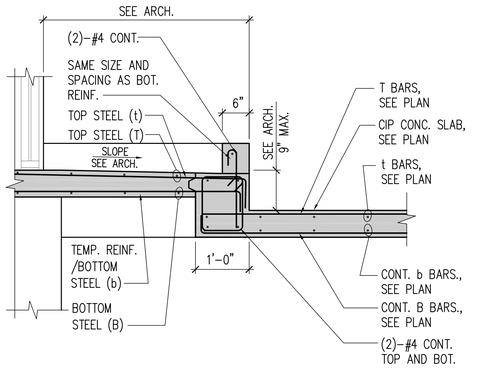

5 S-5.1 SLAB STEP AT LANAI
SCALE: NONE

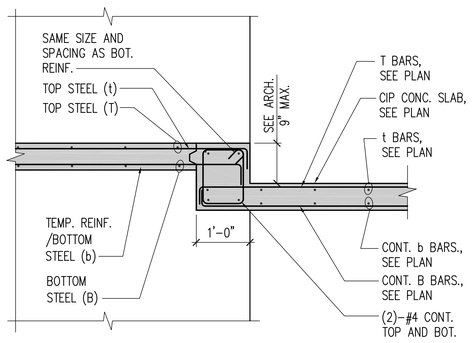

6 S-5.1 SLAB STEP AT LOBBY ROOF
SCALE: NONE

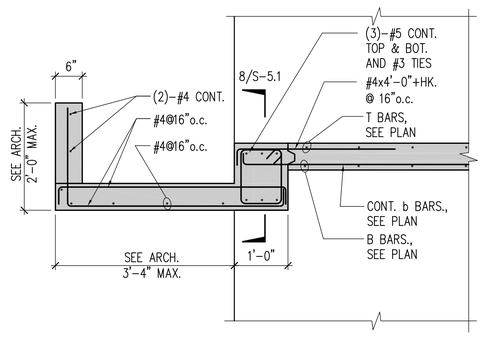

7 S-5.1 SLAB EDGE AT CANOPY
SCALE: NONE

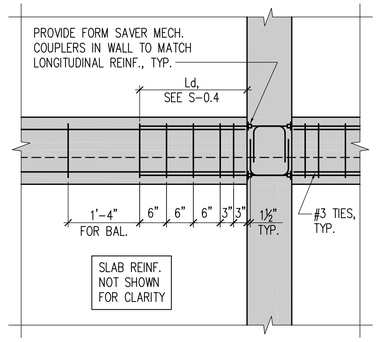

8 S-5.1 THICKENED SLAB AT CONC WALL
SCALE: NONE

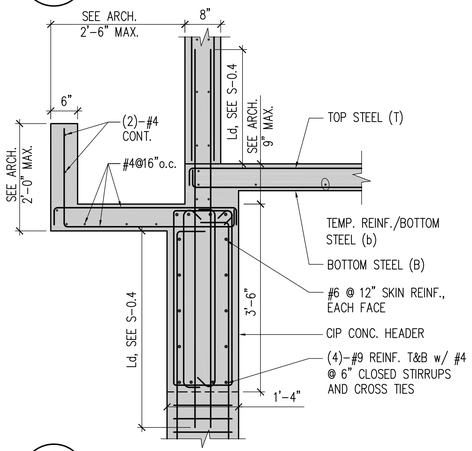

9 S-5.1 CANOPY SLAB AT WALL
SCALE: NONE

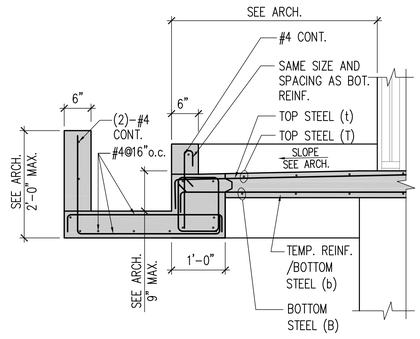

10 S-5.1 CANOPY SLAB STEP AT LANAI
SCALE: NONE

NO.	DATE	REVISIONS
.	.	.

STEVEN M. BALDRIDGE LICENSED PROFESSIONAL ENGINEER No. 7879-S HAWAII, U.S.A.

THIS WORK WAS PREPARED BY ME OR UNDER MY SUPERVISION AND CONSTRUCTION OBSERVATION WORK WILL BE UNDER MY OBSERVATION, CHAPTER 16-115, DEPARTMENT OF COMMERCE AND CONSUMER AFFAIRS
STEVEN M. BALDRIDGE, EXP.
April 30, 2014
FOR BALDRIDGE & ASSOCIATES STRUCTURAL ENGINEERING, INC.

KAKAAKO WORKFORCE HOUSING PER
SUBCHAPTER 4 OF 2011 MAUKA PLAN AND RULES
801 SOUTH STREET
HONOLULU, HAWAII
TOWER SLAB & FRAMING DETAILS

KAZU YATO, AIA & ASSOCIATES,INC.
2333 ROUNDTOP TERRACE
HONOLULU, HI 96822
TEL: (808) 945-0040
FAX: (808) 945-0041

DATE	DRAWN	CHECK	FILE
11/08/12	TD	SB	

SHEET
S-5.1

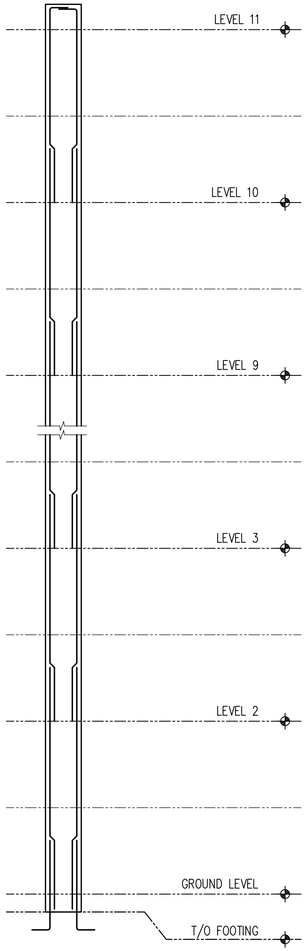

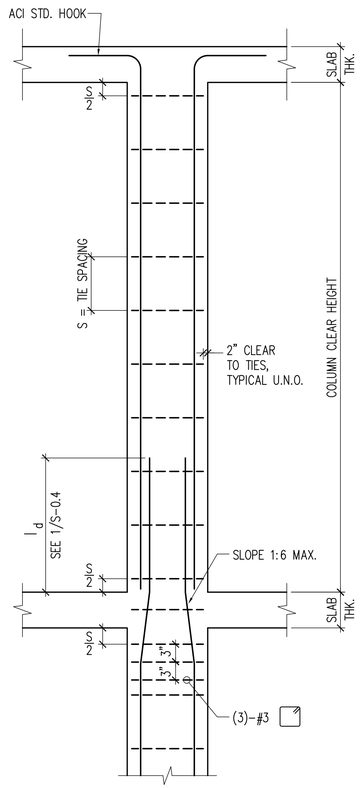

GARAGE CONCRETE COLUMN SCHEDULE

LEVEL	f'c ksi		COLUMN MARK C1	C2	C3	C4	C5	C6	C7
LEVEL 11	5						12" x 24" 8–#6 #3 @ 12" E	12" x 24" 8–#6 #3 @ 12" E	16" x 16" 8–#6 #3 @ 12" F
LEVEL 10	5	SIZE ("w" x "d") VERT. BARS TIES DETAIL – TYPE	24" x 24" 10–#10 #3 @ 10" B	36" x 24" 12–#8 #3 @ 10" A	26" x 26" 10–#8 #3 @ 10" B	24" x 36" 10–#9 #3 @ 10" D			
LEVEL 9	5	SIZE ("w" x "d") VERT. BARS TIES DETAIL – TYPE			26" x 26" 10–#8 #3 @ 18" B	24" x 36" 10–#9 #3 @ 18" D			
LEVEL 8	5	SIZE ("w" x "d") VERT. BARS TIES DETAIL – TYPE							
LEVEL 7	5	SIZE ("w" x "d") VERT. BARS TIES DETAIL – TYPE							
LEVEL 6	5	SIZE ("w" x "d") VERT. BARS TIES DETAIL – TYPE							
LEVEL 5	5	SIZE ("w" x "d") VERT. BARS TIES DETAIL – TYPE							
LEVEL 4	6	SIZE ("w" x "d") VERT. BARS TIES DETAIL – TYPE		36" x 24" 12–#8 #3 @ 10" A					
LEVEL 3	6	SIZE ("w" x "d") VERT. BARS TIES DETAIL – TYPE			26" x 26" 10–#8 #3 @ 18" B				
LEVEL 2	6	SIZE ("w" x "d") VERT. BARS TIES DETAIL – TYPE				24" x 36" 10–#9 #3 @ 18" D			
GROUND LEVEL	7	SIZE ("w" x "d") VERT. BARS TIES DETAIL – TYPE	24" x 24" 10–#10 #3 @ 10" B	36" x 24" 12–#8 #3 @ 16" A	26" x 26" 10–#9 #3 @ 16" B	24" x 36" 14–#10 #3 @ 18" C	12" x 24" 8–#6 #3 @ 12" E		
DOWELS			10–#10	12–#8	10–#9	14–#10	8–#6	8–#6	8–#6

1 S-6.0 TYP. COLUMN ELEVATION

SCALE: NONE

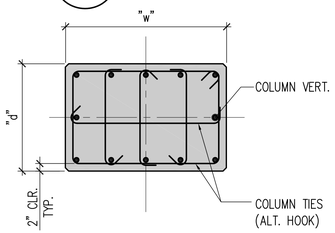

TYPE "A"

SEE COLUMN ELEVATION FOR REINF. NOT NOTED

2 S-6.0 COLUMN ELEVATION

SCALE: NONE

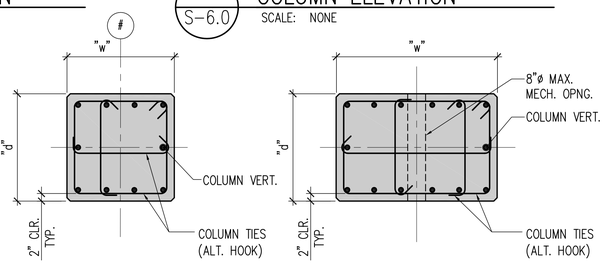

TYPE "B" TYPE "C"

3 S-6.0 COLUMN SCHEDULE

SCALE: NONE

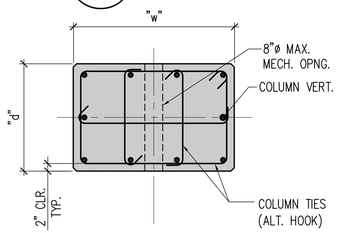

TYPE "D"

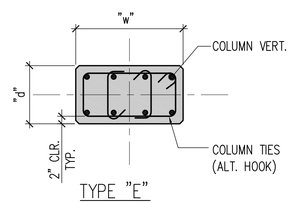

TYPE "E"

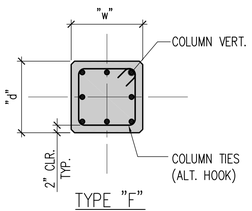

TYPE "F"

4 S-6.0 COLUMN TYPES

SCALE: 3/4" = 1'-0"

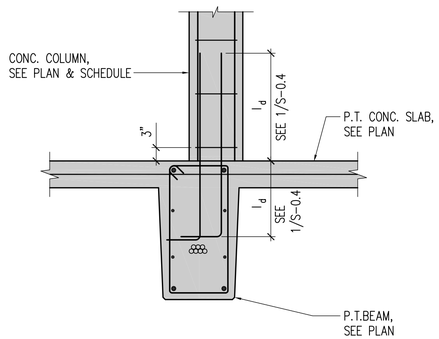

5 S-6.0 CONC. COLUMN AT PT BEAM

SCALE: 3/4" = 1'-0"

REVISIONS

NO.	DATE	
.	.	.

STEVEN M. BALDRIDGE LICENSED PROFESSIONAL ENGINEER No. 7879-S HAWAII, U.S.A.

THIS WORK WAS PREPARED BY ME OR UNDER MY SUPERVISION AND CONSTRUCTION OF THIS PROJECT WILL BE UNDER MY OBSERVATION, CHAPTER 16-115, DEPARTMENT OF COMMERCE AND CONSUMER AFFAIRS

EXP. April 30, 2014

FOR BALDRIDGE & ASSOCIATES STRUCTURAL ENGINEERING, INC.

KAKAAKO WORKFORCE HOUSING PER SUBCHAPTER 4 OF 2011 MAUKA PLAN AND RULES

801 SOUTH STREET HONOLULU, HAWAII

GARAGE COLUMN SCHEDULE & DETAILS

KAZU YATO, AIA & ASSOCIATES, INC.
2333 ROUNDTOP TERRACE HONOLULU, HI 96822
TEL: (808) 945-0040
FAX: (808) 945-0041

DATE	DRAWN	CHECK	FILE
11/08/12	TD	SB	

SHEET

S-6.0

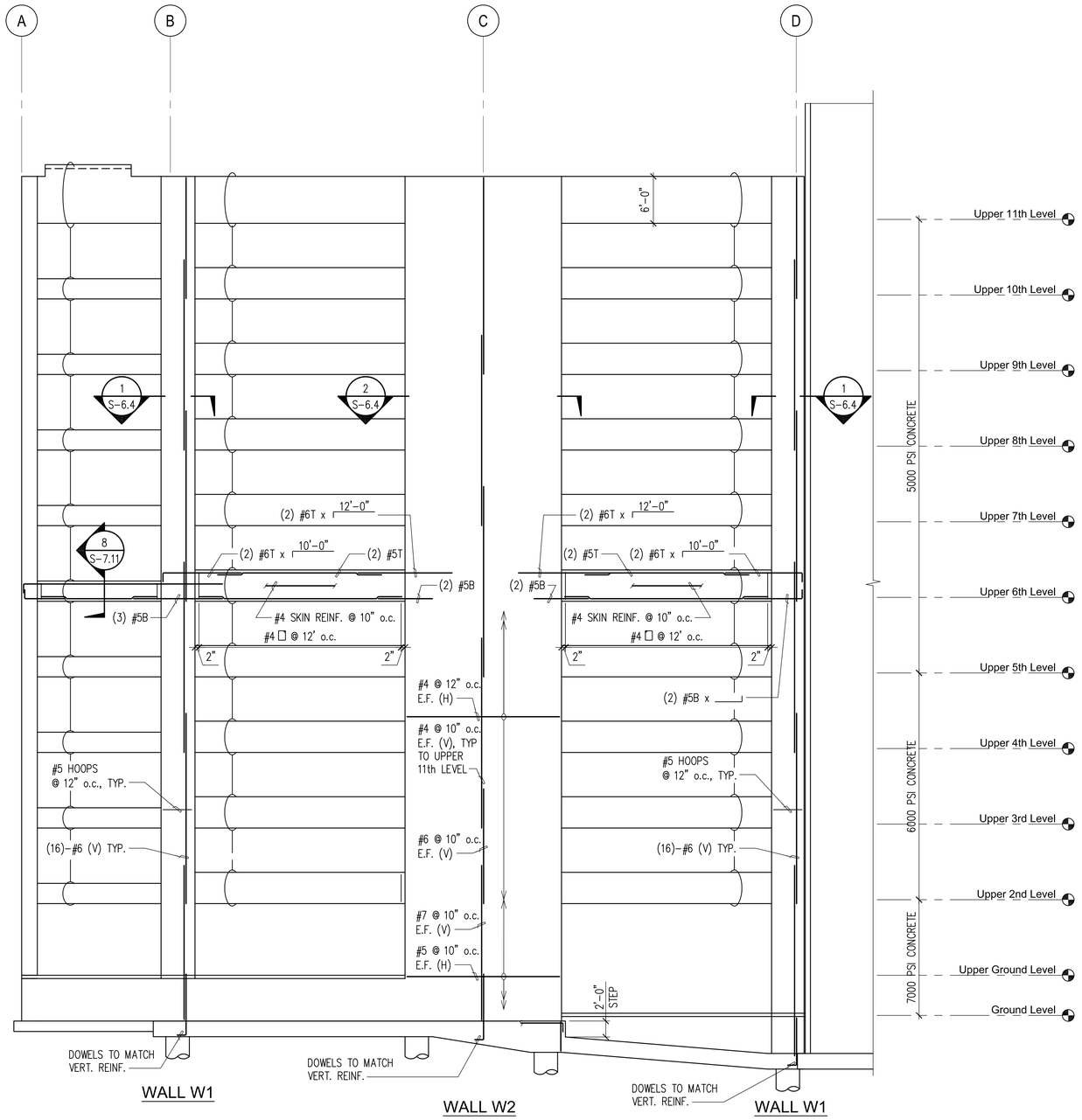

1 / S-6.1 SHEAR WALL ELEVATION AT GRID 1
SCALE: 1/8" = 1'-0"

NOTES:

1. SEE S-0.0 SERIES FOR GENERAL NOTES
2. ALL SPLICES SHALL BE TENSION LAP SPLICES, SEE S-0.4.
3. ALL HORIZONTAL REINFORCEMENT SHALL BE TERMINATED WITH ACI STANDARD 90° HOOK.
4. ELEVATIONS ARE PROVIDED FOR REFERENCE ONLY, VERIFY ALL ELEVATIONS W/ ARCHITECTURAL DRAWINGS.
5. ALL DIMENSIONS SHOWN ARE FOR REFERENCE ONLY AND SHALL BE VERIFIED WITH ARCHITECTURAL AND OTHER DISCIPLINES DRAWINGS. CONTRACTOR SHALL NOTIFY ARCHITECT IN WRITING IF DIMENSIONS CHANGE.
6. SEE S-6.4 FOR TYP. WALL DETAILS.

NO.	DATE	REVISIONS
.	.	.

STEVEN M. BALDRIDGE
LICENSED PROFESSIONAL ENGINEER
No. 7875-S
U.S.A. HAWAII

THIS WORK WAS PREPARED BY ME OR UNDER MY SUPERVISION AND CONSTRUCTION OF THIS PROJECT WILL BE UNDER MY OBSERVATION, CHAPTER 16-115, DEPARTMENT OF COMMERCE AND CONSUMER AFFAIRS
EXP.
April 30, 2014

FOR BALDRIDGE & ASSOCIATES
STRUCTURAL ENGINEERING, INC.

KAKAAKO WORKFORCE HOUSING PER
SUBCHAPTER 4 OF 2011 MAUKA PLAN AND RULES
801 SOUTH STREET
HONOLULU, HAWAII

GARAGE SHEAR WALL ELEVATION

KAZU YATO, AIA & ASSOCIATES,INC.
2033 ROUNDTOP TERRACE
HONOLULU, HI 96822
TEL: (808) 945-0040
FAX: (866) 945-0041

DATE	DRAWN	CHECK	FILE
11/05/12	TD	SB	

SHEET

S-6.1

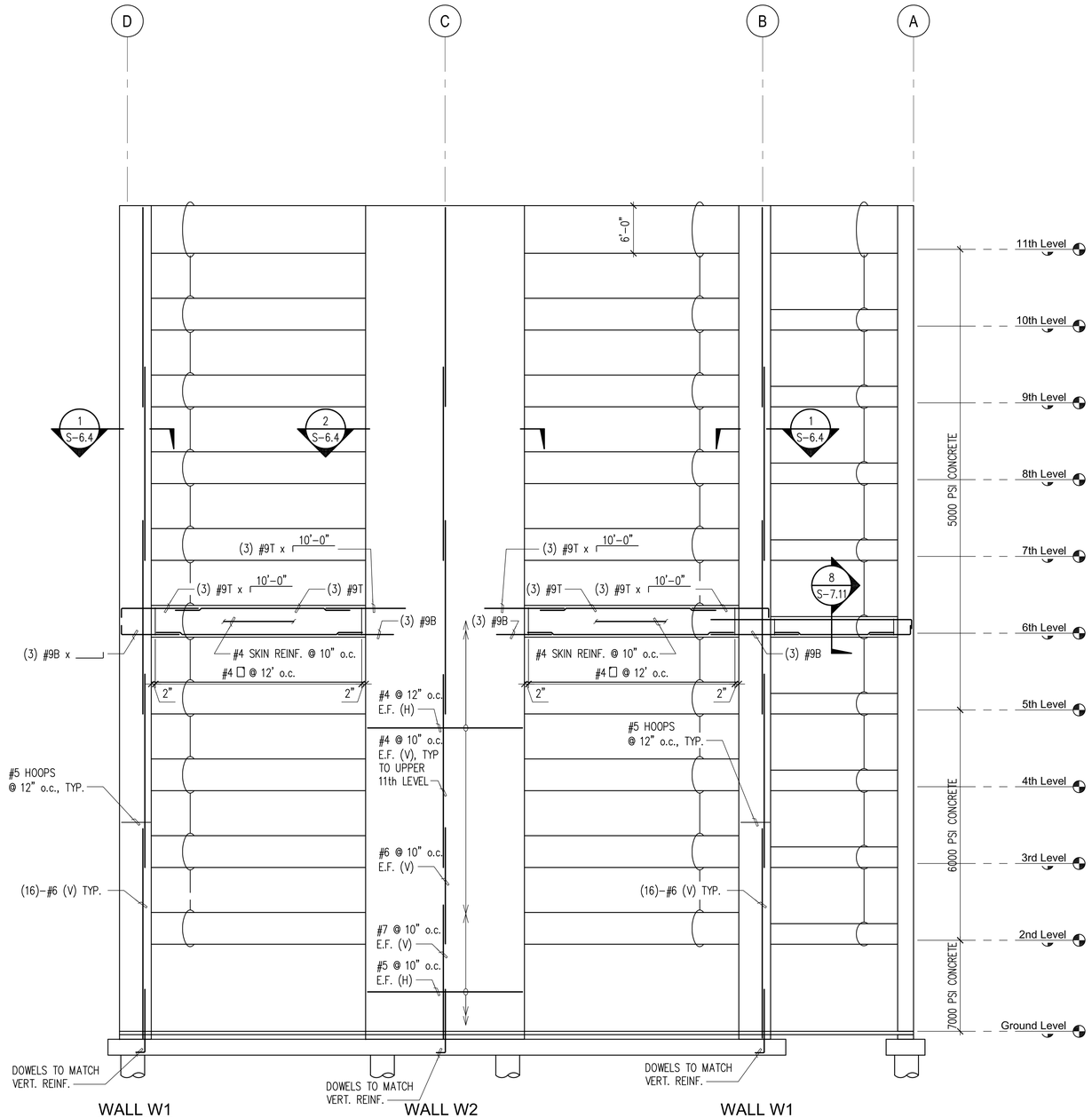

1 S-6.2 SHEAR WALL ELEVATION AT GRID 10
SCALE: 1/8" = 1'-0"

NOTES:

1. SEE S-0.0 SERIES FOR GENERAL NOTES
2. ALL SPLICES SHALL BE TENSION LAP SPLICES, SEE S-0.4.
3. ALL HORIZONTAL REINFORCEMENT SHALL BE TERMINATED WITH ACI STANDARD 90° HOOK.
4. ELEVATIONS ARE PROVIDED FOR REFERENCE ONLY, VERIFY ALL ELEVATIONS W/ ARCHITECTURAL DRAWINGS.
5. ALL DIMENSIONS SHOWN ARE FOR REFERENCE ONLY AND SHALL BE VERIFIED WITH ARCHITECTURAL AND OTHER DISCIPLINES DRAWINGS. CONTRACTOR SHALL NOTIFY ARCHITECT IN WRITING IF DIMENSIONS CHANGE.
6. SEE S-6.4 FOR TYP. WALL DETAILS.

NO.	DATE	REVISIONS
.	.	.

STEVEN M. BALDRIDGE LICENSED PROFESSIONAL ENGINEER No. 7875-S STATE OF HAWAII

THIS WORK WAS PREPARED BY ME OR UNDER MY SUPERVISION AND CONSTRUCTION OF THIS PROJECT WILL BE UNDER MY OBSERVATION, CHAPTER 16-115, DEPARTMENT OF COMMERCE AND CONSUMER AFFAIRS
EXP. April 30, 2014

FOR BALDRIDGE & ASSOCIATES/ STRUCTURAL ENGINEERING, INC.

KAKAAKO WORKFORCE HOUSING PER SUBCHAPTER 4 OF 2011 MAUKA PLAN AND RULES
801 SOUTH STREET
HONOLULU, HAWAII

GARAGE SHEAR WALL ELEVATION

KAZU YATO, AIA & ASSOCIATES, INC.
2333 ROUNDTOP TERRACE
HONOLULU, HI 96822
TEL: (808) 943-0040
FAX: (808) 943-0041

DATE	DRAWN	CHECK	FILE
11/08/12	TD	SB	

SHEET

S-6.2

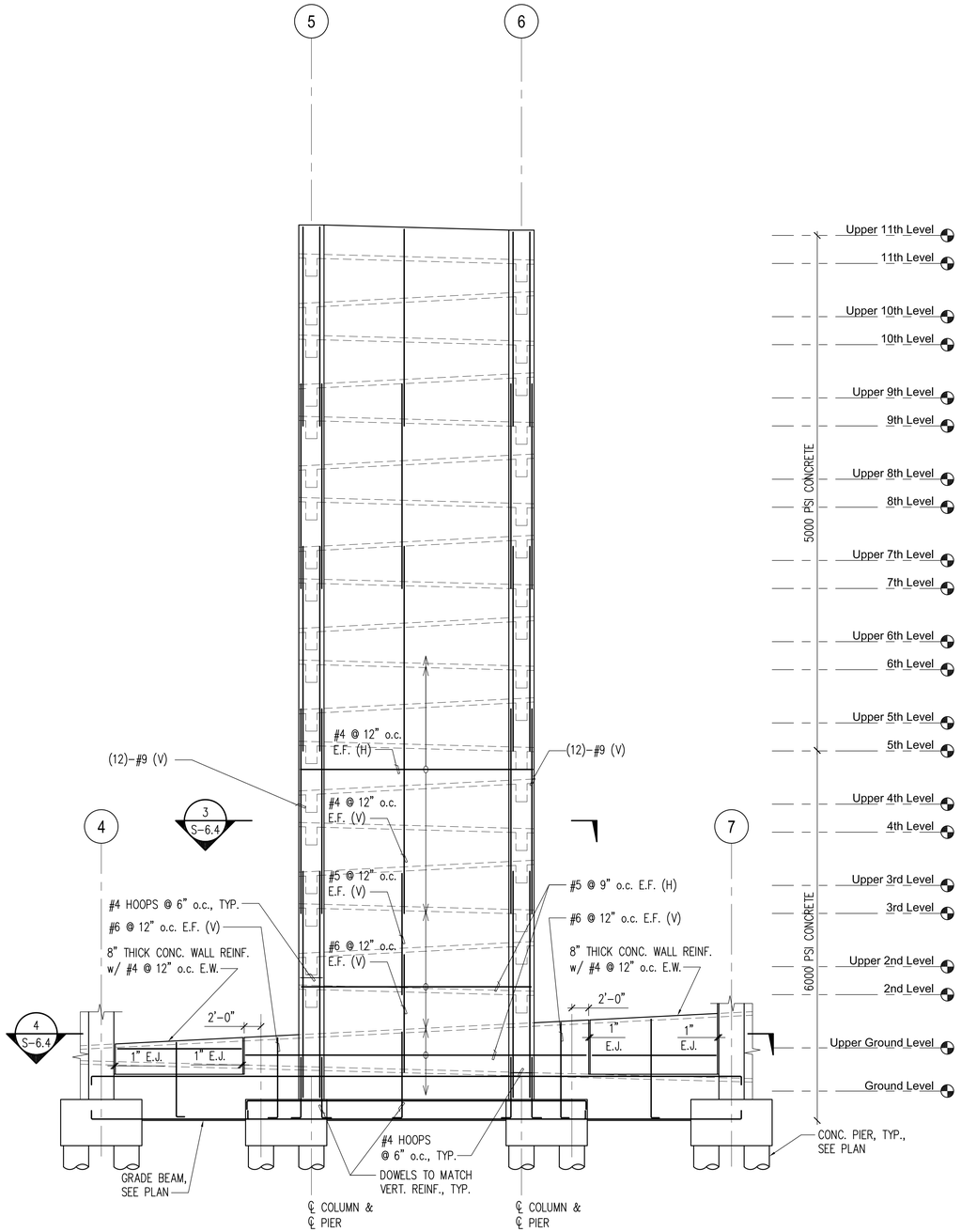

WALL W3

1 / S-6.3 SHEAR WALL ELEVATION AT GRID C

SCALE: 1/8" = 1'-0"

NOTES:

1. SEE S-0.0 SERIES FOR GENERAL NOTES
2. ALL SPLICES SHALL BE TENSION LAP SPLICES, SEE S-0.4.
3. ALL HORIZONTAL REINFORCEMENT SHALL BE TERMINATED WITH ACI STANDARD 90° HOOK.
4. ELEVATIONS ARE PROVIDED FOR REFERENCE ONLY, VERIFY ALL ELEVATIONS W/ ARCHITECTURAL DRAWINGS.
5. ALL DIMENSIONS SHOWN ARE FOR REFERENCE ONLY AND SHALL BE VERIFIED WITH ARCHITECTURAL AND OTHER DISCIPLINES DRAWINGS. CONTRACTOR SHALL NOTIFY ARCHITECT IN WRITING IF DIMENSIONS CHANGE.
6. SEE S-6.4 FOR TYP. WALL DETAILS.

NO.	DATE	REVISIONS
.	.	.

STEVEN M. BALDRIDGE LICENSED PROFESSIONAL ENGINEER No. 7675-S HAWAII, U.S.A.

THIS WORK WAS PREPARED BY ME OR UNDER MY SUPERVISION AND COMPLIES WITH CHAPTER 464 AND WILL BE UNDER MY OBSERVATION, CHAPTER 16-115, DEPARTMENT OF COMMERCE AND CONSUMER AFFAIRS

EXP. April 30, 2014

FOR BALDRIDGE & ASSOCIATES/ STRUCTURAL ENGINEERING, INC.

KAKAAKO WORKFORCE HOUSING PER SUBCHAPTER 4 OF 2011 MAUKA PLAN AND RULES

801 SOUTH STREET
HONOLULU, HAWAII

GARAGE SHEAR WALL ELEVATION

KAZU YATO, AIA & ASSOCIATES,INC.
2033 ROUNDTOP TERRACE
HONOLULU, HI 96822
TEL: (808) 945-0040
FAX: (866) 945-0041

DATE	DRAWN	CHECK	FILE
11/08/12	TD	SB	

SHEET

S-6.3

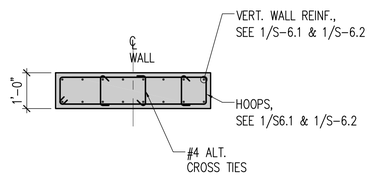

1 S-6.4 SHEAR WALL DETAIL AT GRID 1 & 10 (WALL W1)

SCALE: 1/2" = 1'-0"

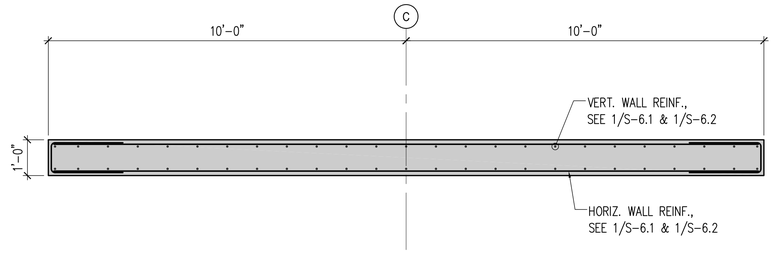

2 S-6.4 SHEAR WALL DETAIL AT GRID 1 & 10 (WALL W2)

SCALE: 1/2" = 1'-0

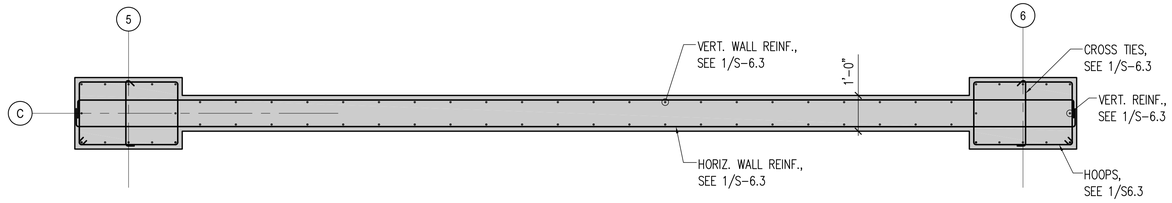

3 S-6.4 SHEAR WALL DETAIL AT GRID C (WALL W3)

SCALE: 1/2" = 1'-0

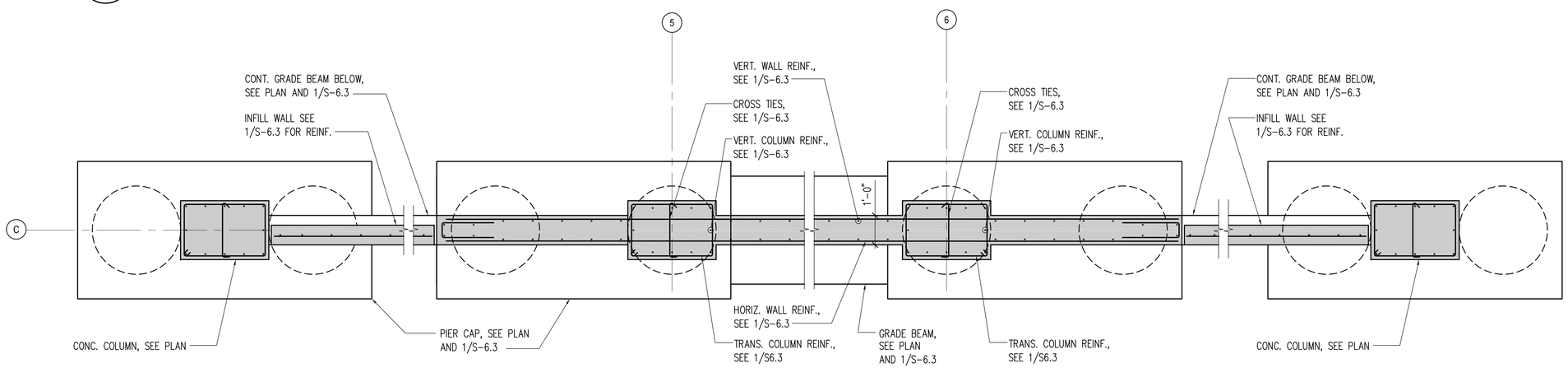

4 S-6.4 SHEAR WALL DETAIL AT GRID C (WALL W3)

SCALE: 1/2" = 1'-0

REVISIONS

NO.	DATE	
.	.	.

STEVEN M. BALDRIDGE LICENSED PROFESSIONAL ENGINEER No. 7879-S HAWAII, U.S.A.

THIS WORK WAS PREPARED BY ME OR UNDER MY SUPERVISION AND CONSTRUCTION OF THIS PROJECT WILL BE UNDER MY OBSERVATION, CHAPTER 16-115, DEPARTMENT OF COMMERCE AND CONSUMER AFFAIRS

EXP.

April 30, 2014

FOR BALDRIDGE & ASSOCIATES/ STRUCTURAL ENGINEERING, INC.

KAKAAKO WORKFORCE HOUSING PER SUBCHAPTER 4 OF 2011 MAUKA PLAN AND RULES

801 SOUTH STREET
HONOLULU, HAWAII

GARAGE SHEAR WALL DETAILS

KAZU YATO, AIA & ASSOCIATES,INC.
2033 ROUNDTOP TERRACE
HONOLULU, HI 96822
TEL: (808) 945-0040
FAX: (866) 945-0041

DATE	DRAWN	CHECK	FILE
11/08/12	TD	SB	

SHEET

S-6.4

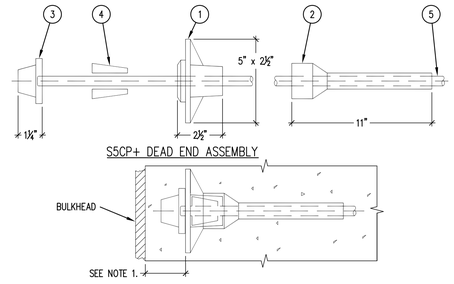

ITEM	DESCRIPTION
1	ANCHORAGE S5CP+
2	PROTECTION SLEEVE S5CP+
3	END CAP S5CP+
4	MONOWEDGES TYPE 1.5
5	STRAND (GREASED & COATED)

NOTES:

1. LOCATE ANCHOR AT BULKHEAD PER PROJECT PLANS.
2. IF FABRICATED AT SHOP, WEDGES, GREASE CAP, AND SLEEVE WILL BE ASSEMBLED TIGHT TO ANCHOR
3. IF FIELD SEATING IS REQUIRED, BE SURE ALL COMPONENTS ARE TIGHT TO ANCHOR, BE SURE NO BARE STRAND IS EXPOSED, TAPE IF NECESSARY

1 S-7.0 ENCAPSULATED SYSTEM for TENDONS in CORROSIVE ENVIRONMENT (DEAD END)

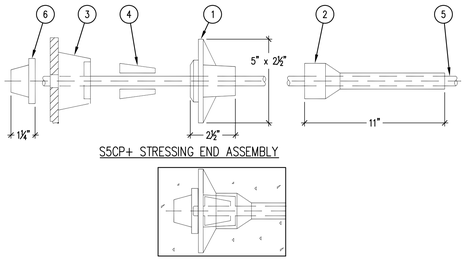

ITEM	DESCRIPTION
1	ANCHORAGE S5CP+
2	PROTECTION SLEEVE S5CP+
3	GROMMET S5CP+
4	MONOWEDGES TYPE 1.5
5	STRAND (GREASED & COATED)
3	END CAP S5CP+

NOTES:

1. LOCATE ANCHOR AT BULKHEAD PER PROJECT PLANS.
2. INSTALL GROMMET FLUSH BTWN. BULKHEAD & ANCHOR FOR TIGHT SEAL.
3. SLIDE SLEEVE TIGHT AGAINST ANCHOR. BE SURE NO BARE STRAND IS EXPOSED. TAPE IF NECESSARY.
4. AFTER POURING, AT TIME OF STRESSING, REMOVE GROMMET & INSERT WEDGE
5. AFTER STRESSING, CUT STRAND TO WITHIN ⅜" OF END OF END CAP & GREASE END CAP PRIOR TO INSERTING IT TIGHT AGAINST ANCHOR
6. PATCH STRESSING POCKET PER PROJECT PLANS.

2 S-7.0 ENCAPSULATED SYSTEM for TENDONS in CORROSIVE ENVIRONMENT (STRESSING END)

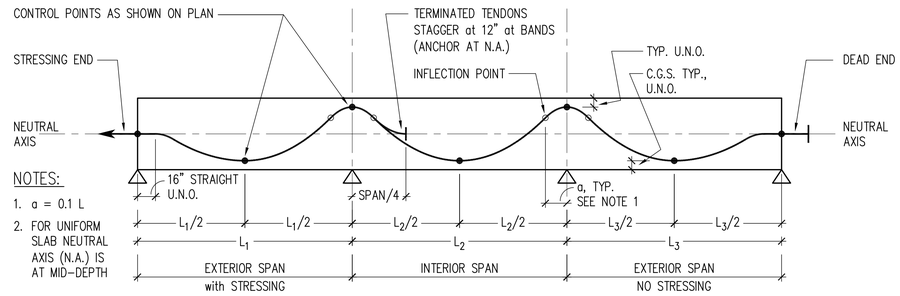

NOTES:

1. a = 0.1 L
2. FOR UNIFORM SLAB NEUTRAL AXIS (N.A.) IS AT MID-DEPTH

3 S-7.0 PROFILE for REVERSED PARABOLA TENDONS

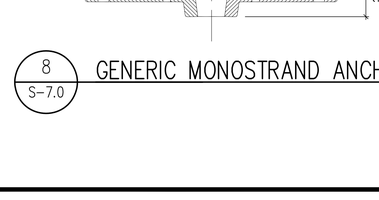

4 S-7.0 DISTRIBUTED TENDON ANCHORAGE at DEAD END

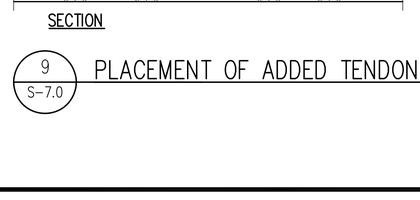

5 S-7.0 DISTRIBUTED TENDON ANCHORAGE at STRESSING END

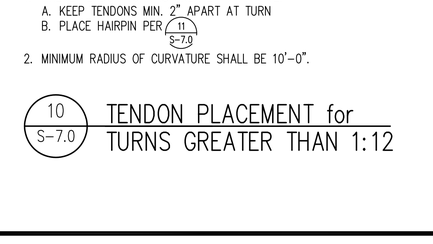

6 S-7.0 CONSTRUCTION JOINT with NO INTERMEDIATE STRESSING

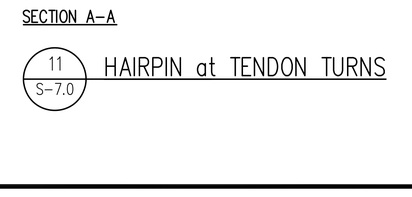

7 S-7.0 CONSTRUCTION JOINT with INTERMEDIATE STRESSING

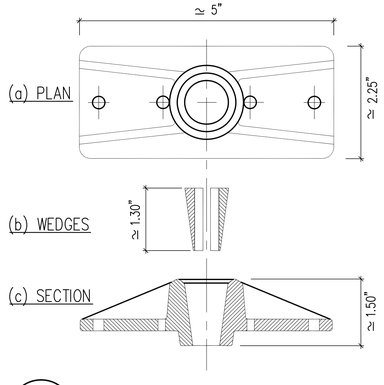

8 S-7.0 GENERIC MONOSTRAND ANCHORAGE

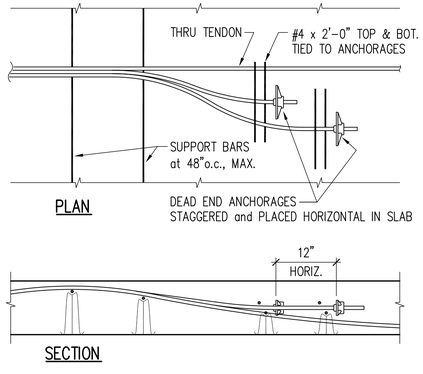

9 S-7.0 PLACEMENT OF ADDED TENDONS

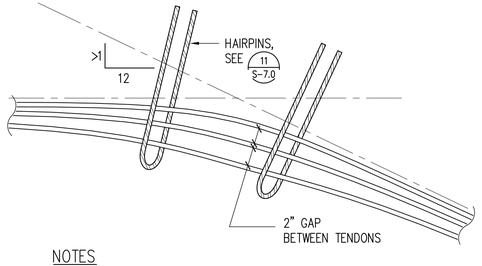

NOTES

1. WHERE TENDON TURN IS GREATER THAN 1:12:
   A. KEEP TENDONS MIN. 2" APART AT TURN
   B. PLACE HAIRPIN PER 11 S-7.0
2. MINIMUM RADIUS OF CURVATURE SHALL BE 10'-0".

10 S-7.0 TENDON PLACEMENT for TURNS GREATER THAN 1:12

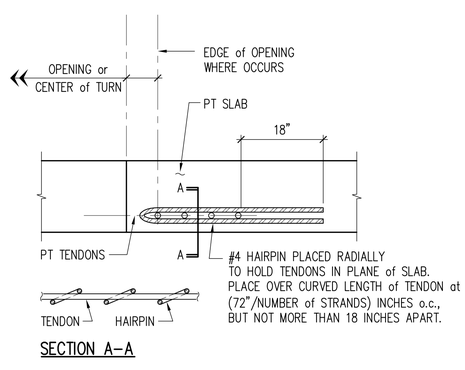

SECTION A-A

11 S-7.0 HAIRPIN at TENDON TURNS

REVISIONS

NO.	DATE	
.	.	.

STEVEN M. BALDRIDGE LICENSED PROFESSIONAL ENGINEER No. 7675-S U.S.A. HAWAII

THIS WORK WAS PREPARED BY ME OR UNDER MY SUPERVISION AND CONSISTENT WITH MY RESPONSIBILITY WILL BE UNDER MY OBSERVATION, CHAPTER 16-115, DEPARTMENT OF COMMERCE AND CONSUMER AFFAIRS

EXP. April 30, 2014

FOR BALDRIDGE & ASSOCIATES STRUCTURAL ENGINEERING, INC.

KAKAAKO WORKFORCE HOUSING PER
SUBCHAPTER 4 OF 2011 MAUKA PLAN AND RULES
801 SOUTH STREET
HONOLULU, HAWAII

GARAGE P.T. DETAILS

KAZU YATO, AIA & ASSOCIATES, INC.
2033 ROUNDTOP TERRACE
HONOLULU, HI 96822
TEL: (808) 945-0040
FAX: (866) 945-5041

DATE	DRAWN	CHECK	FILE
11/08/12	TD	SB	

SHEET

S-7.0

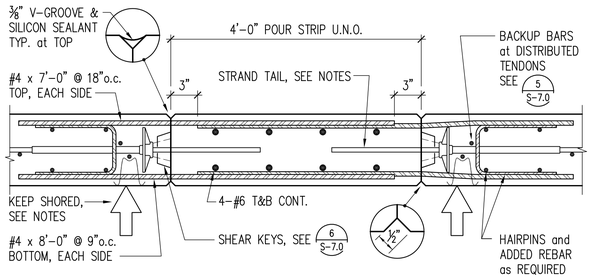

CLOSURE STRIP NOTES:

1. RETAIN SHORING UNTIL CLOSURE CONCRETE REACHES SLAB'S DESIGN STRENGTH OR 14 DAYS.
2. CLOSURE STRIP TO BE POURED WITH NON-SHRINK CONCRETE NOT LESS THAN 28 DAYS AFTER STRESSING.
3. ROUGHEN AND CLEAN JOINTS AND WET PRIOR TO PLACING CONCRETE.
4. ELIMINATE ACCIDENTAL MISALIGNMENT BETWEEN EDGE OF SLABS THAT ARE TO BE JOINED WITH A CLOSURE STRIP. USE MECHANICAL METHODS SUCH AS JACKING IF NECESSARY.
5. RAISE EDGE OF SLAB 1/4" AT CLOSURE TO ALLOW FOR SETTLEMENT.
6. PROVIDE WATERPROOFING MEMBRANE IF REQUIRED FOR WATER-TIGHTNESS.
7. IF CLOSURE IS EXPOSED TO WEATHERING AND/OR MOISTURE USE GROMMETS; CUT STRESSED STRAND TAILS; PREPARE AND SEAL STRESSING POCKETS AS STIPULATED IN GENERAL NOTES; CAULK JOINT ALL AROUND.

1 / S-7.1 POST TENSIONED SLAB CLOSURE STRIP DETAIL

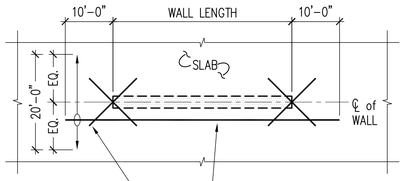

3 / S-7.1 ADDED REBAR at WALLS

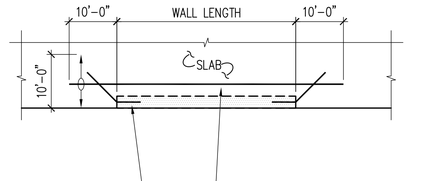

4 / S-7.1 ADDED REBAR at EXTERIOR WALLS

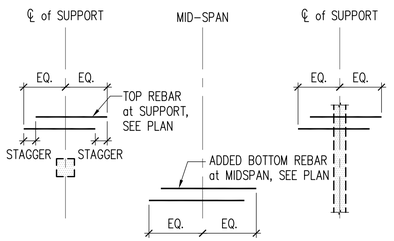

NOTE: UNLESS NOTED OTHERWISE, STAGGER ALL BARS (ALL CONDITIONS) 12". IF SPACE IS INSUFFICIENT FIELD ADJUST TO LESS STAGGER.

5 / S-7.1 ARRANGEMENT of BARS IN SLAB

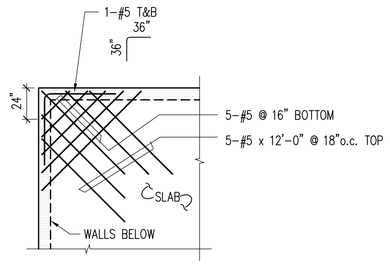

6 / S-7.1 TRIM BARS at SUPPORTED SLAB CORNERS

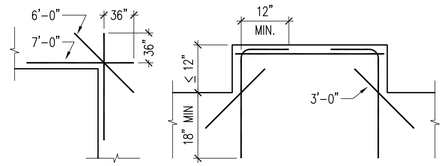

RE-ENTRANT CORNERS SHORT CANTILEVERS

ALL BARS 1-#5 TOP & BOTTOM AS SHOWN, U.N.O.

7 / S-7.1 TRIM BARS at SLAB EDGES

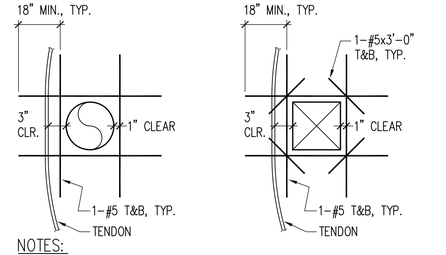

NOTES:

1. SINGLE OPENINGS OF SMALLER DIMENSION DO NOT REQUIRE TRIM BARS.
2. FOR MULTIPLE OPENINGS, SEE 10 S-7.0

8 / S-7.1 TRIM BARS at SMALL OPENING IN SLAB (10" to 24")

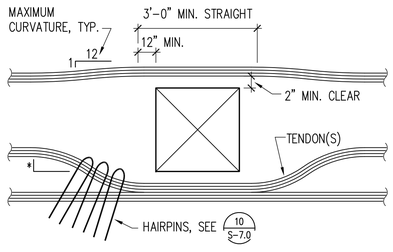

* WHERE TENDON CURVATURE EXCEEDS 1:12 SEE 11 S-7.0

9 / S-7.1 TENDON PLACEMENT at OPENING IN SLAB (>24")

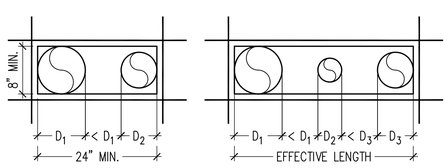

NOTES:

INSERTS WHICH ARE CLOSER TO ONE ANOTHER THAN THE DIAMETER OF THE LARGER OF THE TWO ARE CONSIDERED TO FORM A COMBINED OPENING.

1. IF THE COMBINED OPENING IS LESS THAN 12", NO TRIM BARS ARE REQ'D.
2. IF THE COMBINED OPENING IS MORE THAN 12", BUT LESS THAN 24", PROVIDE 1-#5 T&B WITH 1'-0" EMBEDMENT PAST THE OPENING.
3. NO DIAGONAL BARS ARE NECESSARY.
4. COMBINED OPENING SHALL NOT BE LARGER THAN 24".

10 / S-7.1 TRIM BARS for MULTIPLE SMALL OPENINGS

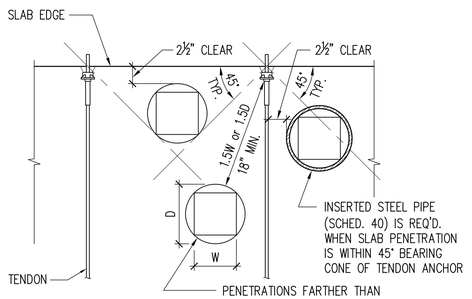

NOTE: PENETRATIONS WITH DIMENSIONS GREATER THAN 12" REQUIRE TRIM REBAR PER

11 / S-7.1 OPENINGS at PT ANCHORAGE

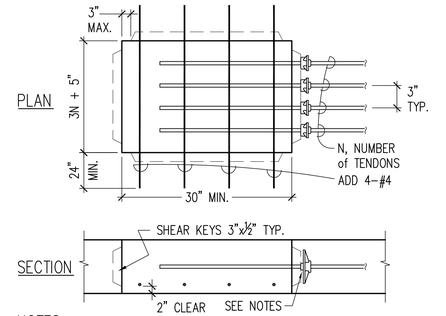

NOTES

1. CUT STRESSED STRANDS; GREASED AND PLACE END CAP 2 S-7.0
2. CONTINUE ALL INTERRUPTED BARS SHOWN IN PLANS THROUGH THE BLOCKOUT
3. FILL THE BLOCKOUT WITH NON-SHRINK GROUT CONCRETE OF MIN. SAME STRENGTH AS SLAB.

12 / S-7.1 STRESSING BLOCKOUT

REVISIONS

NO.	DATE	
.	.	

STEVEN M. BALDRIDGE — LICENSED PROFESSIONAL ENGINEER — No. 7679-S — HAWAII, U.S.A.

THIS WORK WAS PREPARED BY ME OR UNDER MY SUPERVISION AND CONSISTENT WITH THE CODE OF ETHICS WILL BE UNDER MY OBSERVATION, CHAPTER 16-115, DEPARTMENT OF COMMERCE AND CONSUMER AFFAIRS
EXP. April 30, 2014

FOR BALDRIDGE & ASSOCIATES STRUCTURAL ENGINEERING, INC.

KAKAAKO WORKFORCE HOUSING PER
SUBCHAPTER 4 OF 2011 MAUKA PLAN AND RULES
801 SOUTH STREET
HONOLULU, HAWAII

GARAGE P.T. DETAILS

KAZU YATO, AIA & ASSOCIATES, INC.
2033 ROUNDTOP TERRACE
HONOLULU, HI 96822
TEL: (808) 845-0040
FAX: (808) 845-0041

DATE	DRAWN	CHECK	FILE
11/08/12	TD	SB	

SHEET

S-7.1

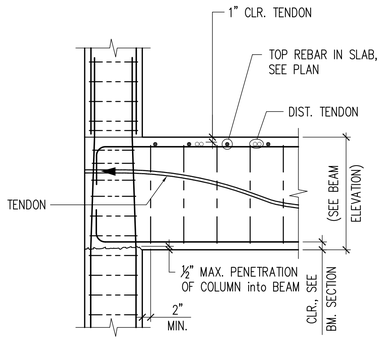

1 S-7.2 EXTERIOR BEAM COLUMN CONN.

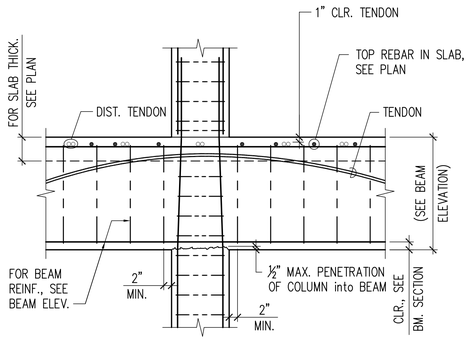

2 S-7.2 TYP. COLUMN/BEAM SECTION

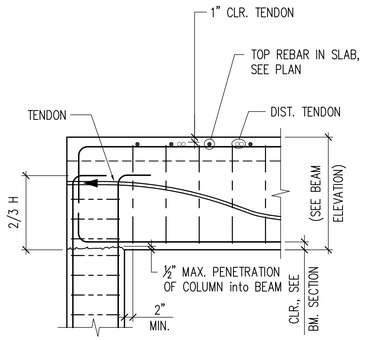

3 S-7.2 TYP. BEAM/END COLUMN CONNECTION AT ROOF

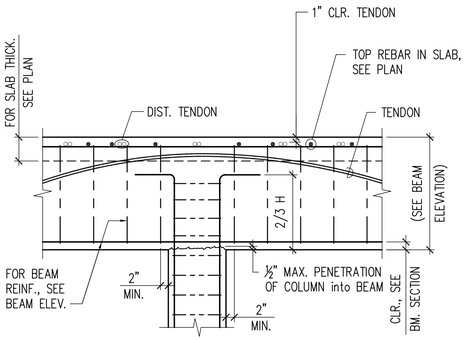

4 S-7.2 TYP. FLOOR BEAM-COLUMN CONN.

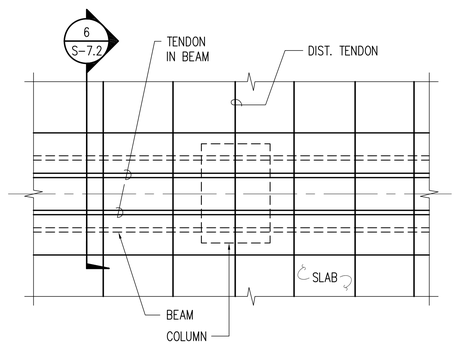

NOTE:
FOR CLARITY, TOP REINFORCEMENT IN DISTRIBUTED NOT SHOWN, SEE PLANS.

5 S-7.2 PLAN VIEW OF INTERIOR COLUMN

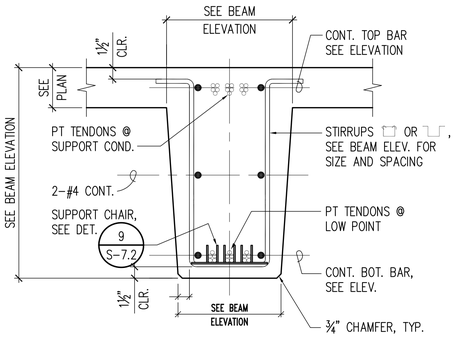

NOTES:
1. FOR POST-TENSIONING FORCES, SEE BEAM ELEVATIONS.
2. KEEP TENDONS GROUPS UNIFORMLY SPACED THROUGHOUT THE LENGTH OF BEAM.

6 S-7.2 PLACEMENT OF TENDONS IN BEAMS

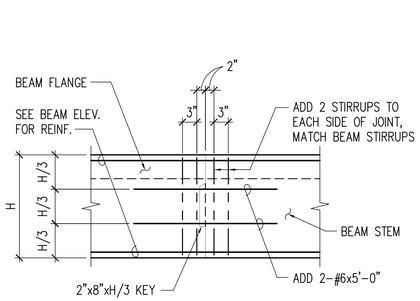

7 S-7.2 BEAM CONSTRUCTION JOINT

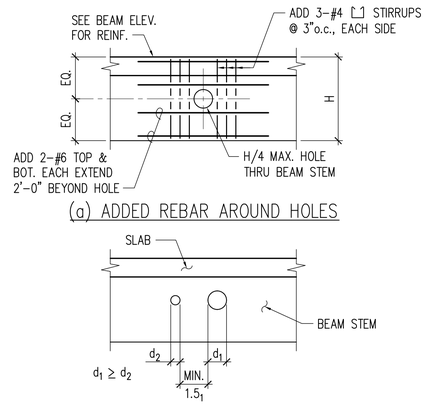

8 S-7.2 PENETRATION THRU BEAM STEM

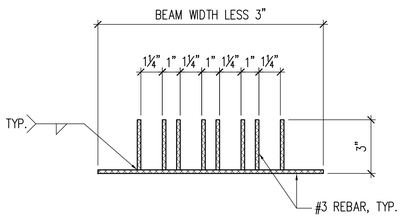

NOTES:
1. SUPPORT CHAIRS @ 42"o.c. MAX. SPACING IN BEAM WITH MORE THAN NINE (9) TENDONS
2. FILL SUPPORT CHAIR SLOTS UNIFORMLY WITH TENDONS.

9 S-7.2 TENDON SUPPORT CHAIR

REVISIONS

NO.	DATE	
.	.	.

STEVEN M. BALDRIDGE LICENSED PROFESSIONAL ENGINEER No. 7879-S HAWAII, U.S.A.

THIS WORK WAS PREPARED BY ME OR UNDER MY SUPERVISION AND COMPLIES WITH DEPARTMENT OF COMMERCE AND CONSUMER AFFAIRS CHAPTER 16-115. DEPARTMENT OF COMMERCE AND CONSUMER AFFAIRS
EXP.
April 30, 2014

FOR BALDRIDGE & ASSOCIATES
STRUCTURAL ENGINEERING, INC.

KAKAAKO WORKFORCE HOUSING PER
SUBCHAPTER 4 OF 2011 MAUKA PLAN AND RULES
801 SOUTH STREET
HONOLULU, HAWAII

GARAGE P.T. DETAILS

KAZU YATO, AIA & ASSOCIATES,INC.
2033 ROUNDTOP TERRACE
HONOLULU, HI 96822
TEL: (808) 943-0040
FAX: (808) 945-0041

DATE	DRAWN	CHECK	FILE
11/08/12	TD	SB	

SHEET

S-7.2

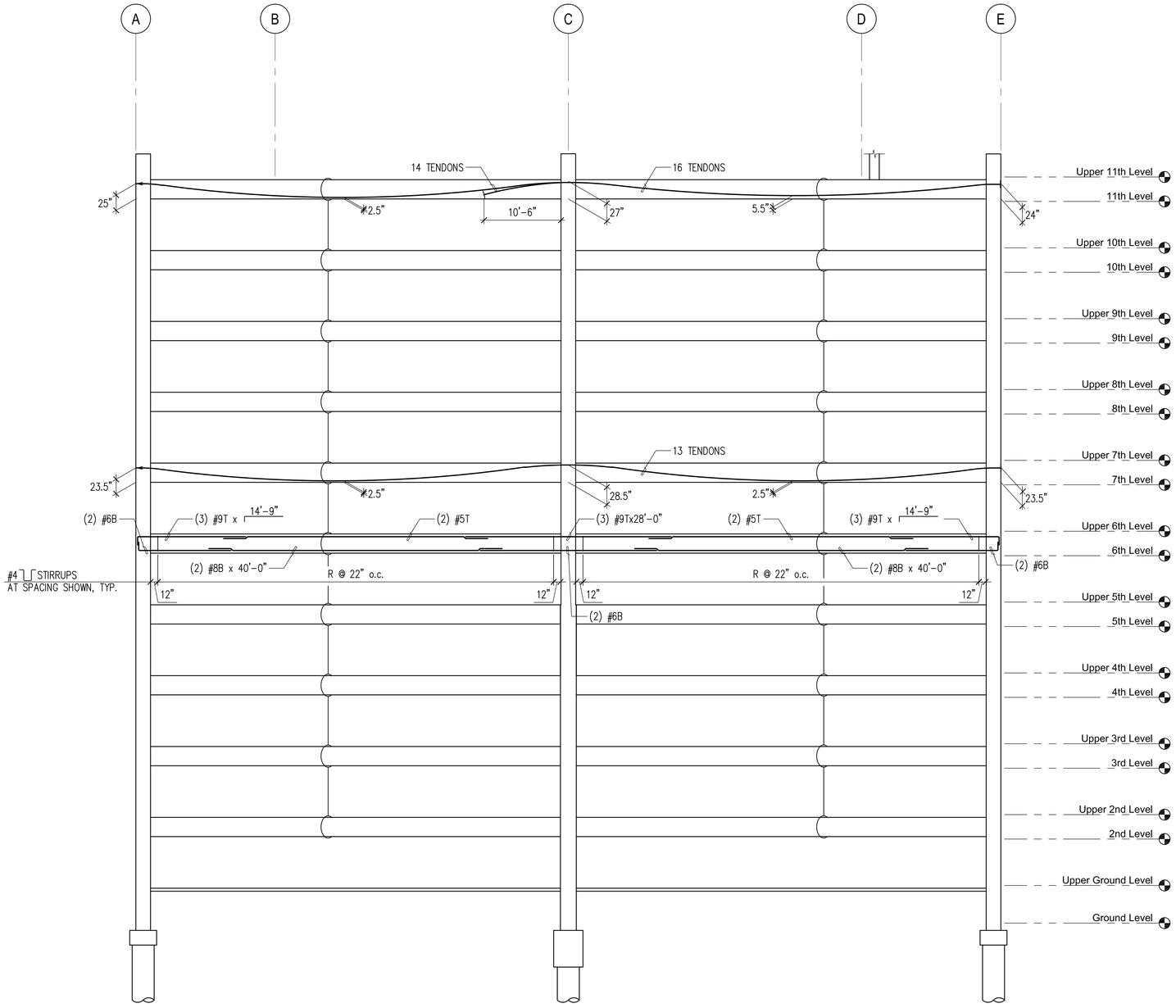

1 / S-7.3 BEAM ELEVATION AT GRID 2

SCALE: 1/8" = 1'-0"

REVISIONS

NO.	DATE	
.	.	.

STEVEN M. BALDRIDGE
LICENSED PROFESSIONAL ENGINEER
No. 7876-S
HAWAII, U.S.A.

THIS WORK WAS PREPARED BY ME OR UNDER MY SUPERVISION AND CONSTRUCTION OF THIS PROJECT WILL BE UNDER MY OBSERVATION, CHAPTER 16-115, DEPARTMENT OF COMMERCE AND CONSUMER AFFAIRS

EXP. April 30, 2014

FOR BALDRIDGE & ASSOCIATES STRUCTURAL ENGINEERING, INC.

KAKAAKO WORKFORCE HOUSING PER
SUBCHAPTER 4 OF 2011 MAUKA PLAN AND RULES

801 SOUTH STREET
HONOLULU, HAWAII

GARAGE BEAM ELEVATION

KAZU YATO, AIA & ASSOCIATES, INC.
2033 ROUNDTOP TERRACE
HONOLULU, HI 96822
TEL: (808) 945-0040
FAX: (808) 945-0041

DATE	DRAWN	CHECK	FILE
11/08/12	TD	SB	

SHEET

S-7.3

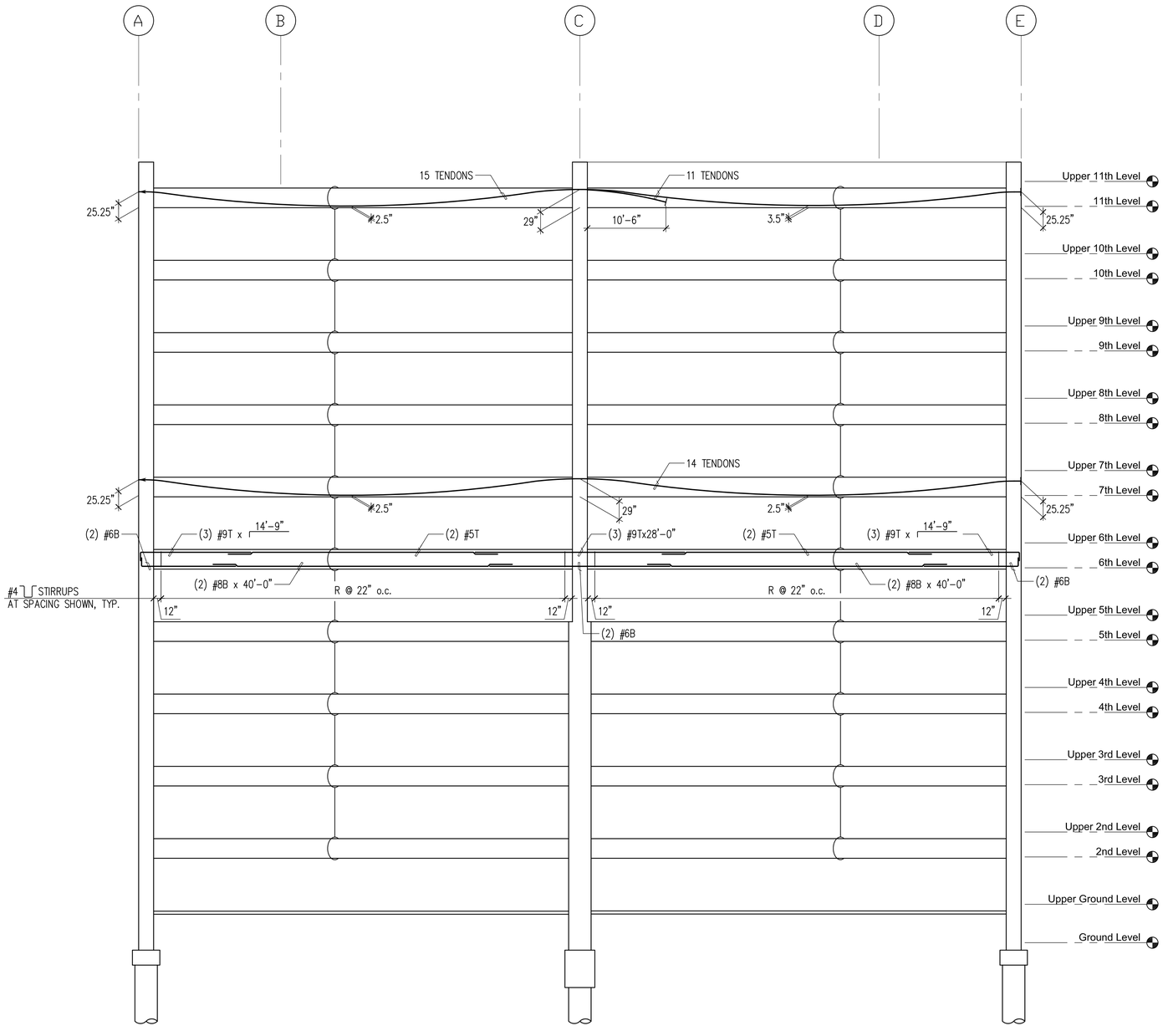

1 / S-7.4 BEAM ELEVATION AT GRID 3
SCALE: 1/8" = 1'-0"

REVISIONS

NO.	DATE	
.	.	.

STEVEN M. BALDRIDGE LICENSED PROFESSIONAL ENGINEER No. 7675-S U.S.A. HAWAII

THIS WORK WAS PREPARED BY ME OR UNDER MY SUPERVISION AND COMPLIES WITH DEPARTMENT OF COMMERCE AND CONSUMER AFFAIRS WILL BE UNDER MY OBSERVATION, CHAPTER 16-115, DEPARTMENT OF COMMERCE AND CONSUMER AFFAIRS
EXP. April 30, 2014

FOR BALDRIDGE & ASSOCIATES/ STRUCTURAL ENGINEERING, INC.

KAKAAKO WORKFORCE HOUSING PER SUBCHAPTER 4 OF 2011 MAUKA PLAN AND RULES
801 SOUTH STREET
HONOLULU, HAWAII

GARAGE BEAM ELEVATION

KAZU YATO, AIA & ASSOCIATES,INC.
2033 ROUNDTOP TERRACE
HONOLULU, HI 96822
TEL: (808) 945-0340
FAX: (808) 945-0341

DATE	DRAWN	CHECK	FILE
11/08/12	TD	SB	

SHEET

S-7.4

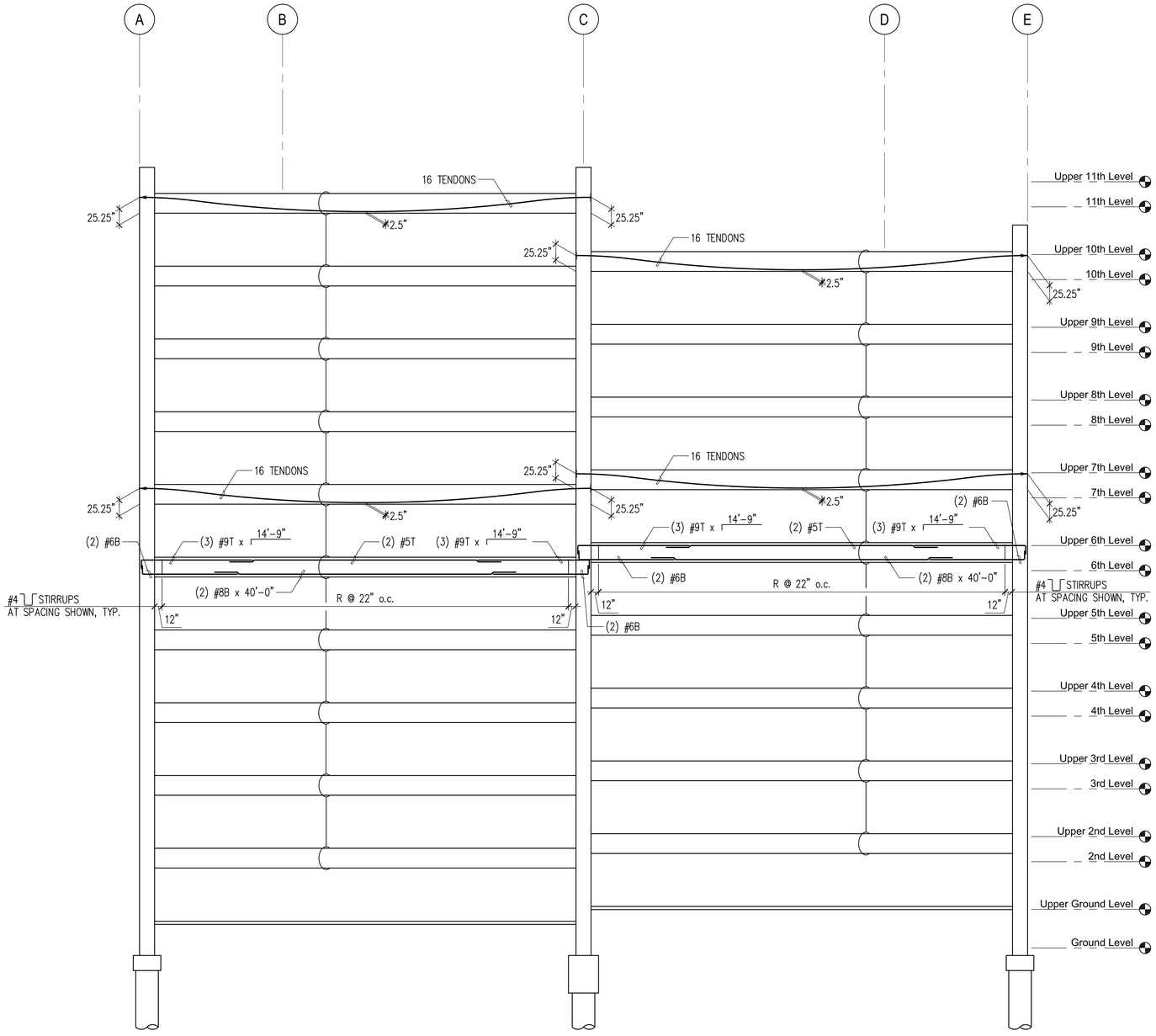

1 / S-7.5 BEAM ELEVATION AT GRID 4

SCALE: 1/8" = 1'-0"

NO.	DATE	REVISIONS
-	-	-

STEVEN M. BALDRIDGE LICENSED PROFESSIONAL ENGINEER No. 7876-S HAWAII, U.S.A.

THIS WORK WAS PREPARED BY ME OR UNDER MY SUPERVISION AND CONSTRUCTION OF THIS PROJECT WILL BE UNDER MY OBSERVATION, CHAPTER 16-115, DEPARTMENT OF COMMERCE AND CONSUMER AFFAIRS

EXP. April 30, 2014

FOR BALDRIDGE & ASSOCIATES STRUCTURAL ENGINEERING, INC.

KAKAAKO WORKFORCE HOUSING PER
SUBCHAPTER 4 OF 2011 MAUKA PLAN AND RULES

801 SOUTH STREET
HONOLULU, HAWAII

GARAGE BEAM ELEVATION

KAZU YATO, AIA & ASSOCIATES, INC.

2033 ROUNDTOP TERRACE
HONOLULU, HI 96822

TEL: (808) 945-0040
FAX: (808) 945-0041

DATE	DRAWN	CHECK	FILE
11/08/12	TD	SB	

SHEET

S-7.5

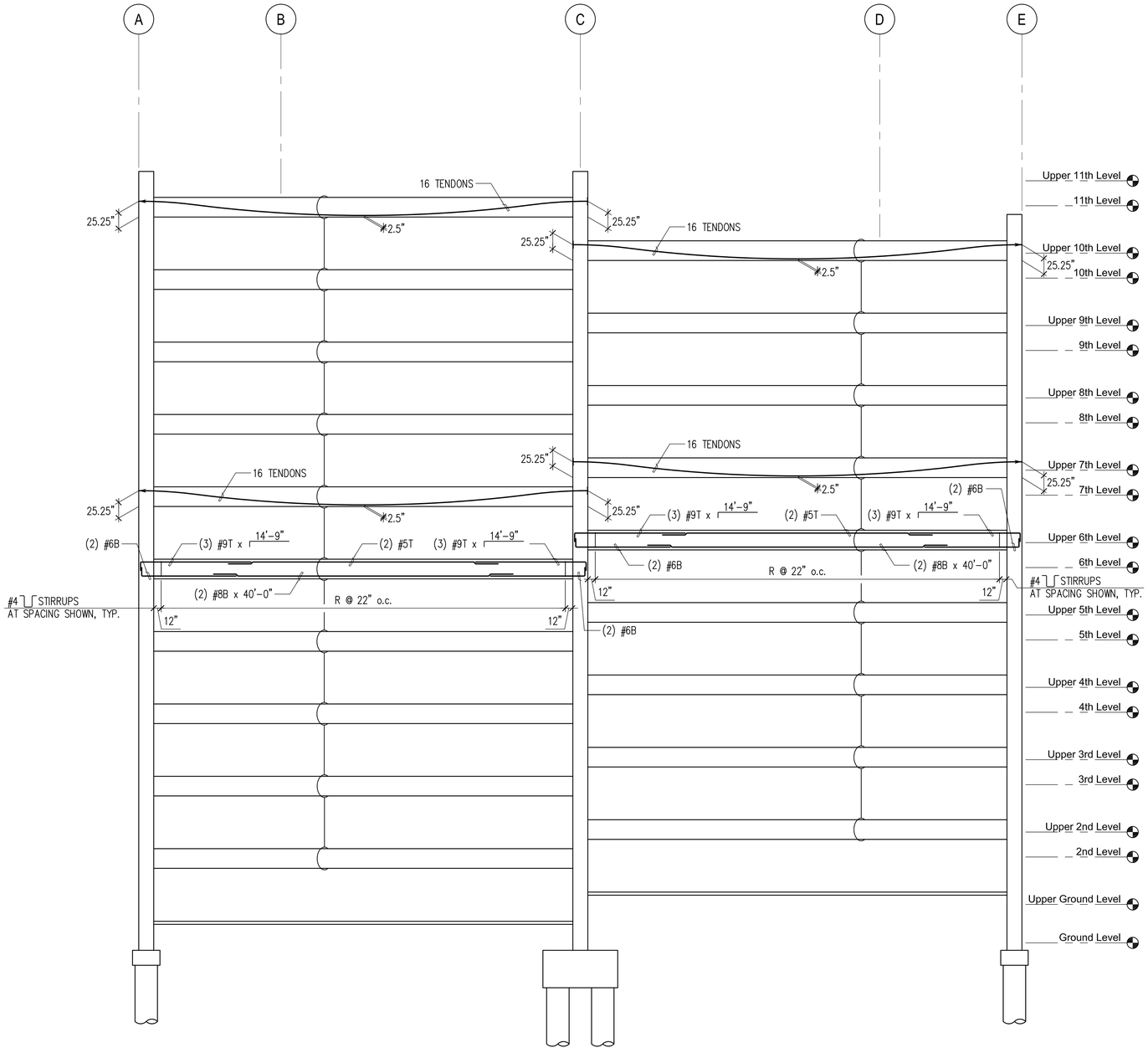

1 / S-7.6 BEAM ELEVATION AT GRID 5
SCALE: 1/8" = 1'-0"

REVISIONS

NO.	DATE	
.	.	.

STEVEN M. BALDRIDGE — LICENSED PROFESSIONAL ENGINEER — No. 7879-S — U.S.A. — HAWAII

THIS WORK WAS PREPARED BY ME OR UNDER MY SUPERVISION AND COMPLIES WITH DEPARTMENT RULES. IT WILL BE UNDER MY OBSERVATION, CHAPTER 16-115, DEPARTMENT OF COMMERCE AND CONSUMER AFFAIRS
EXP.
April 30, 2014

FOR BALDRIDGE & ASSOCIATES/ STRUCTURAL ENGINEERING, INC.

KAKAAKO WORKFORCE HOUSING PER SUBCHAPTER 4 OF 2011 MAUKA PLAN AND RULES
801 SOUTH STREET
HONOLULU, HAWAII

GARAGE BEAM ELEVATION

KAZU YATO, AIA & ASSOCIATES, INC.
2333 ROUNDTOP TERRACE
HONOLULU, HI 96822
TEL: (808) 945-0040
FAX: (808) 945-0041

DATE	DRAWN	CHECK	FILE
11/08/12	TD	SB	

SHEET

S-7.6

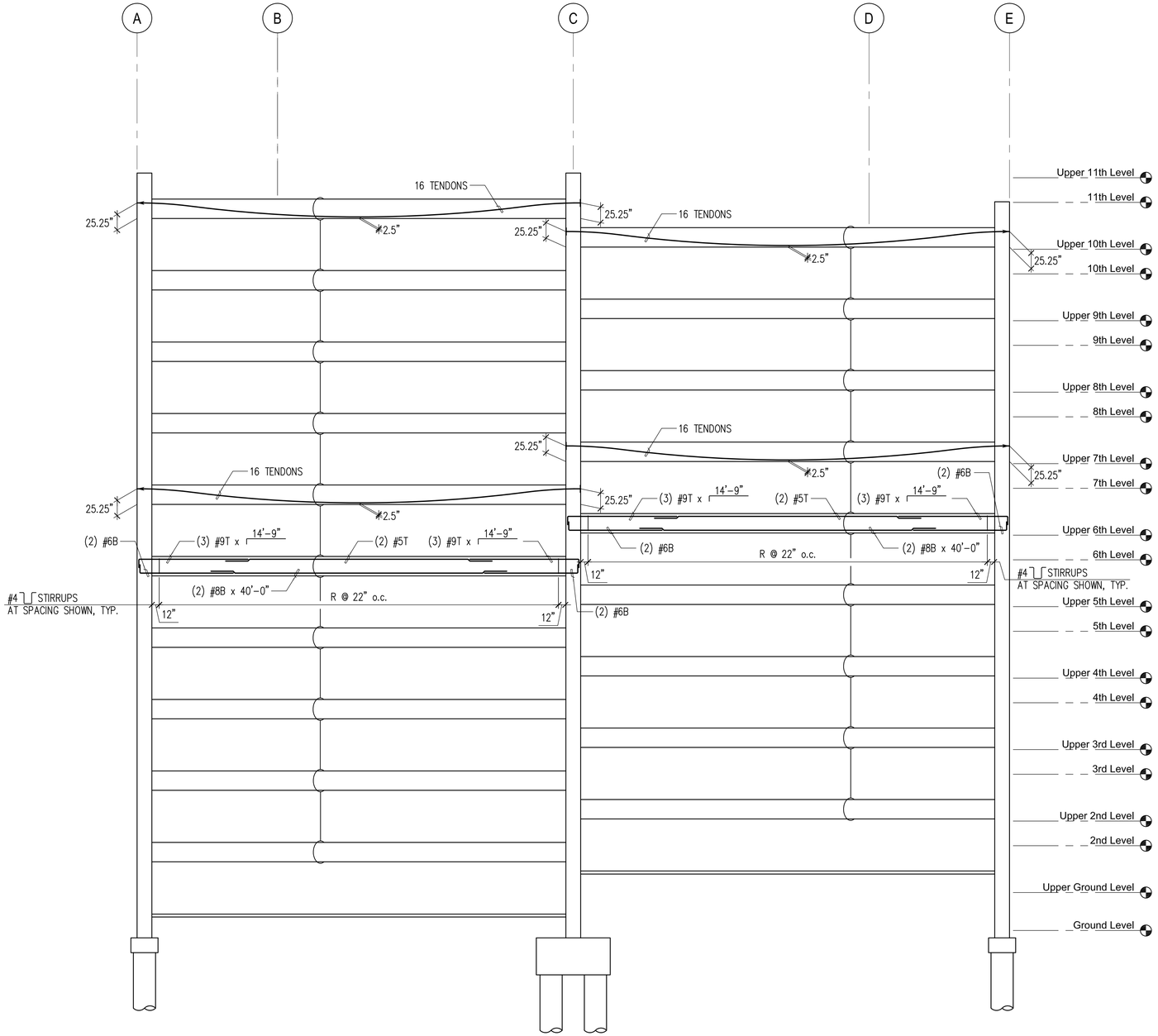

1 / S-7.7 BEAM ELEVATION AT GRID 6
SCALE: 1/8" = 1'-0"

NO.	DATE	REVISIONS
.	.	.

STEVEN M. BALDRIDGE — LICENSED PROFESSIONAL ENGINEER — No. 7875-S — U.S.A. — HAWAII

THIS WORK WAS PREPARED BY ME OR UNDER MY SUPERVISION AND COMPLIES WITH DEPARTMENT RULES. IT WILL BE UNDER MY OBSERVATION, CHAPTER 16-115, DEPARTMENT OF COMMERCE AND CONSUMER AFFAIRS
EXP. April 30, 2014

FOR BALDRIDGE & ASSOCIATES
STRUCTURAL ENGINEERING, INC.

KAKAAKO WORKFORCE HOUSING PER
SUBCHAPTER 4 OF 2011 MAUKA PLAN AND RULES
801 SOUTH STREET
HONOLULU, HAWAII

GARAGE BEAM ELEVATION

KAZU YATO, AIA & ASSOCIATES,INC.
2033 ROUNDTOP TERRACE
HONOLULU, HI 96822
TEL: (808) 945-0040
FAX: (808) 945-0041

DATE	DRAWN	CHECK	FILE
11/08/12	TD	SB	

SHEET
S-7.7

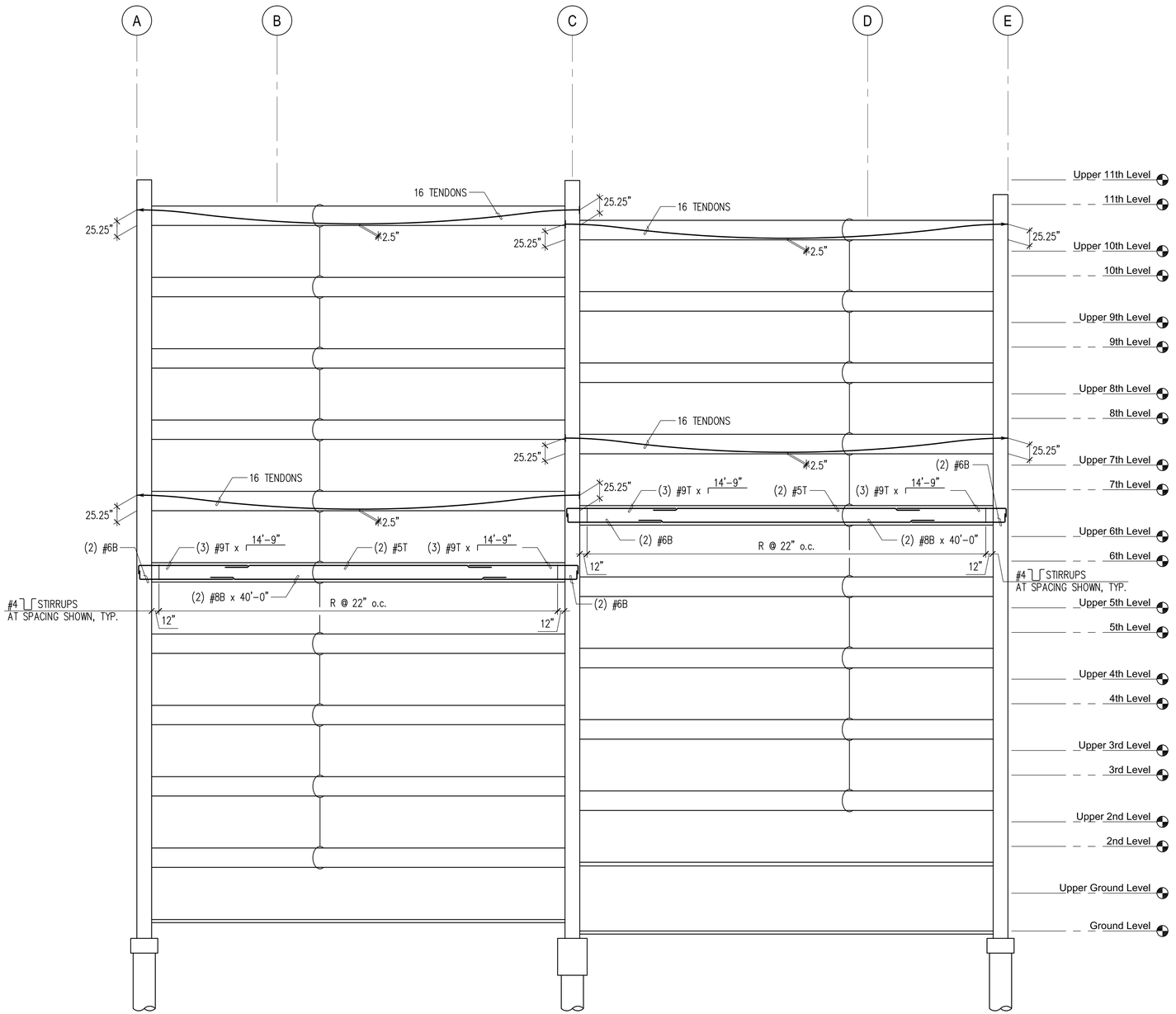

1 / S-7.8 BEAM ELEVATION AT GRID 7

SCALE: 1/8" = 1'-0"

REVISIONS

NO.	DATE	
.	.	.

STEVEN M. BALDRIDGE LICENSED PROFESSIONAL ENGINEER No. 7876-S HAWAII, U.S.A.

THIS WORK WAS PREPARED BY ME OR UNDER MY SUPERVISION AND CONSTRUCTION OF THIS PROJECT WILL BE UNDER MY OBSERVATION, CHAPTER 16-115, DEPARTMENT OF COMMERCE AND CONSUMER AFFAIRS

EXP. April 30, 2014

FOR BALDRIDGE & ASSOCIATES STRUCTURAL ENGINEERING, INC.

KAKAAKO WORKFORCE HOUSING PER SUBCHAPTER 4 OF 2011 MAUKA PLAN AND RULES

801 SOUTH STREET
HONOLULU, HAWAII

GARAGE BEAM ELEVATION

KAZU YATO, AIA & ASSOCIATES, INC.

2033 ROUNDTOP TERRACE
HONOLULU, HI 96822

TEL: (808) 945-0040
FAX: (808) 945-0041

DATE 11/08/12
DRAWN TD
CHECK SB
FILE

SHEET

S-7.8

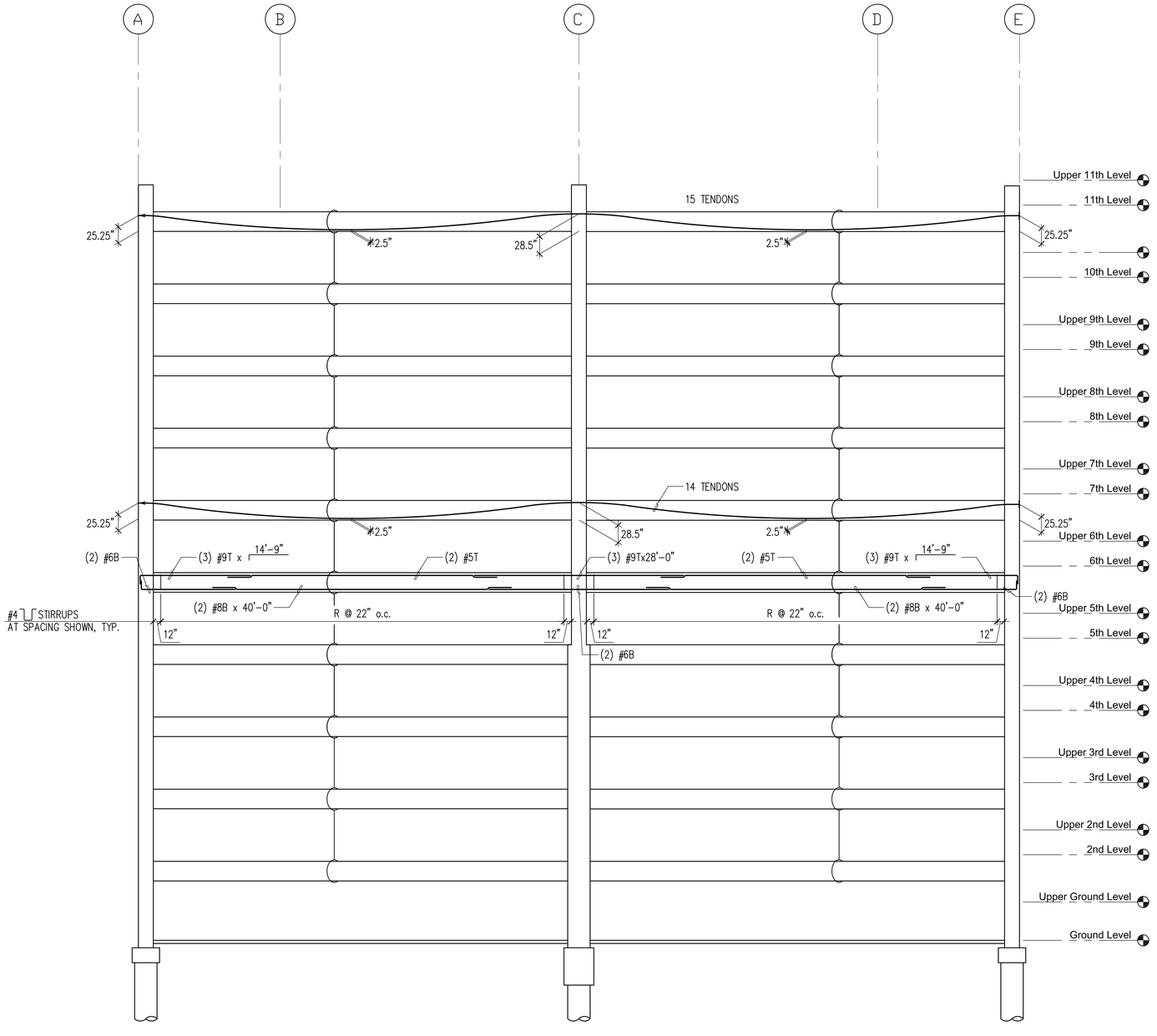

1
S-7.9

BEAM ELEVATION AT GRID 8

SCALE: 1/8" = 1'-0"

REVISIONS

NO.	DATE	
.	.	.

STEVEN M. BALDRIDGE
LICENSED PROFESSIONAL ENGINEER
No. 7675-S
U.S.A. HAWAII

THIS WORK WAS PREPARED BY ME OR UNDER MY SUPERVISION AND COMPLIES WITH DEPARTMENT RULES. IT WILL BE UNDER MY OBSERVATION, CHAPTER 16-115, DEPARTMENT OF COMMERCE AND CONSUMER AFFAIRS

EXP.

April 30, 2014

FOR BALDRIDGE & ASSOCIATES/
STRUCTDEAL ENGINEERING, INC.

KAKAAKO WORKFORCE HOUSING PER
SUBCHAPTER 4 OF 2011 MAUKA PLAN AND RULES

801 SOUTH STREET
HONOLULU, HAWAII

GARAGE BEAM ELEVATION

KAZU YATO, AIA & ASSOCIATES, INC.
2033 ROUNDTOP TERRACE
HONOLULU, HI 96822
TEL: (808) 845-0340
FAX: (808) 845-0341

DATE	DRAWN	CHECK	FILE
11/08/12	TD	SB	

SHEET

S-7.9

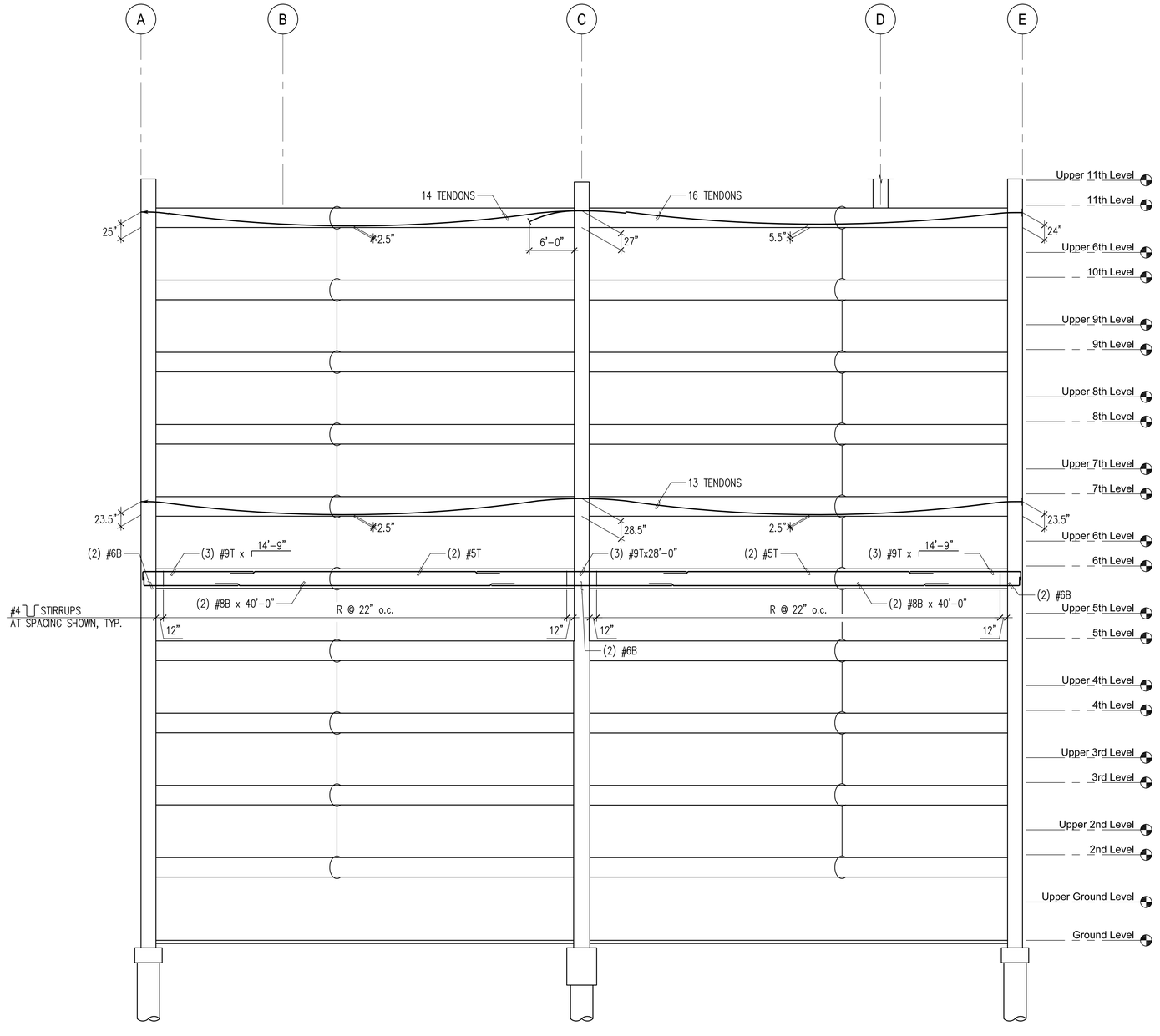

1 / S-7.10 BEAM ELEVATION AT GRID 9
SCALE: 1/8" = 1'-0"

REVISIONS

NO.	DATE	
.	.	.

STEVEN M. BALDRIDGE LICENSED PROFESSIONAL ENGINEER No. 7675-S U.S.A. HAWAII

THIS WORK WAS PREPARED BY ME OR UNDER MY SUPERVISION AND DOCUMENTS OR REPORTS PREPARED WILL BE UNDER MY OBSERVATION, CHAPTER 16-115, DEPARTMENT OF COMMERCE AND CONSUMER AFFAIRS

EXP. April 30, 2014

FOR BALDRIDGE & ASSOCIATES/ STRUCTDOPE, ENGINEERING, INC.

KAKAAKO WORKFORCE HOUSING PER SUBCHAPTER 4 OF 2011 MAUKA PLAN AND RULES

801 SOUTH STREET
HONOLULU, HAWAII

GARAGE BEAM ELEVATION

KAZU YATO, AIA & ASSOCIATES,INC.
2033 ROUNDTOP TERRACE
HONOLULU, HI 96822
TEL: (808) 845-0340
FAX: (808) 845-0341

DATE	DRAWN	CHECK	FILE
11/08/12	TD	SB	

SHEET

S-7.10

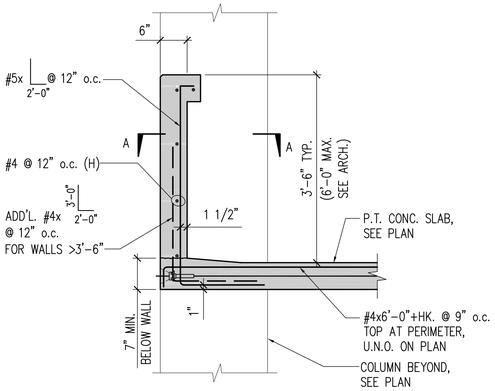

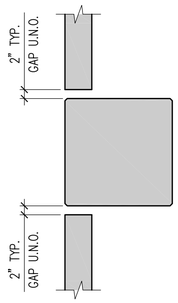

SECTION A–A

1 S–7.11 TYP. 6" CONCRETE RAIL
SCALE: 3/4" = 1'-0"

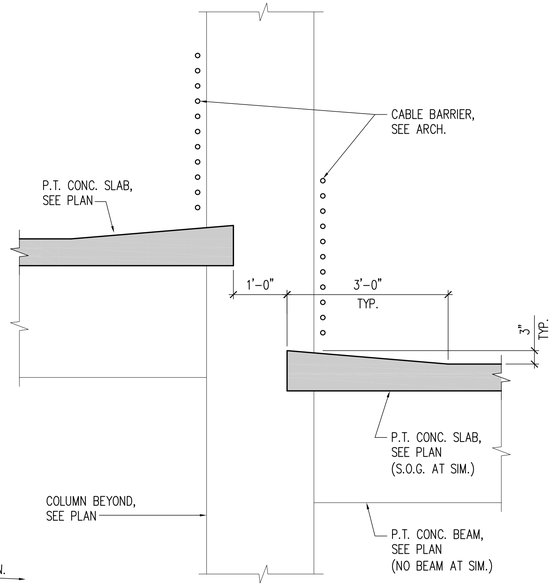

2 S–7.11 SECTION AT RAMP SPLIT
SCALE: 3/4" = 1'-0"

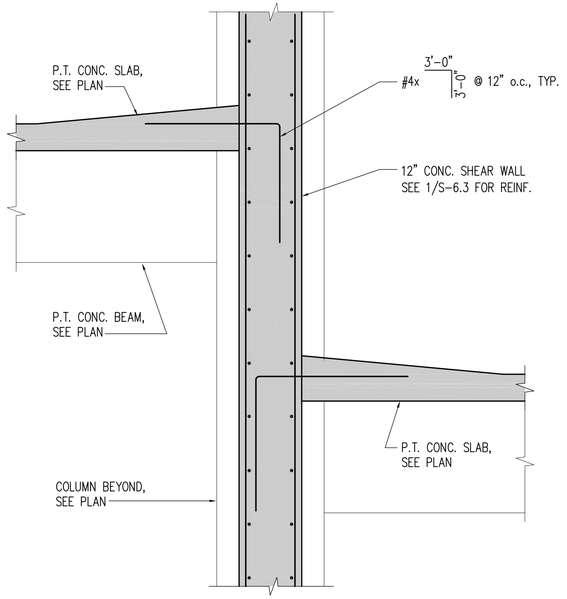

3 S–7.11 SECTION AT RAMP SPLIT
SCALE: 3/4" = 1'-0"

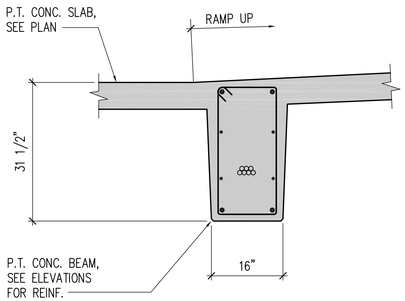

4 S–7.11 SECTION AT BOTTOM OF RAMP
SCALE: 3/4" = 1'-0"

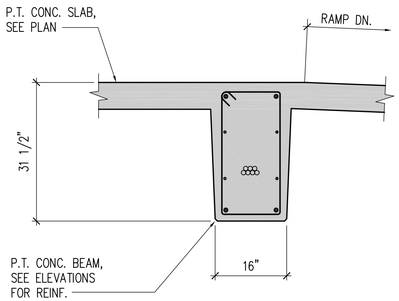

5 S–7.11 SECTION AT TOP OF RAMP
SCALE: 3/4" = 1'-0"

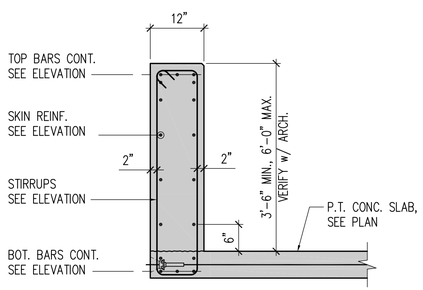

6 S–7.11 TYP. 12" UPTURN CONCRETE BEAM
SCALE: 3/4" = 1'-0"

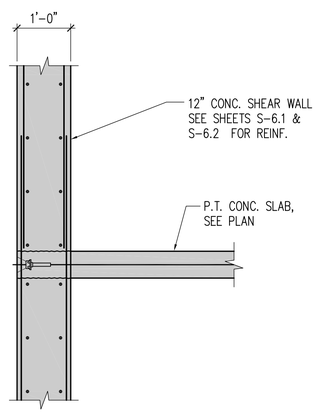

7 S–7.11 P.T. SLAB AT SHEAR WALL
SCALE: 3/4" = 1'-0"

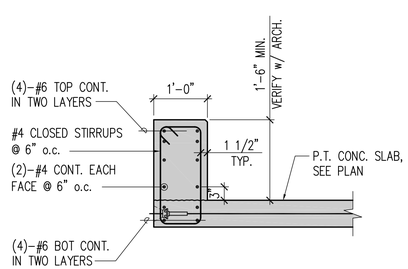

8 S–7.11 8" UPTURN CONC. BEAM AT STORAGE
SCALE: 3/4" = 1'-0"

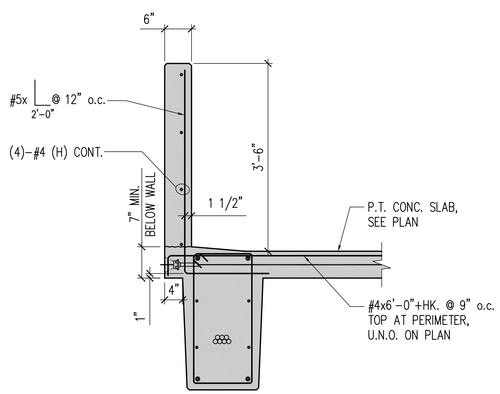

9 S–7.11 6" CONC. RAIL AT ROOF AT GRID LINE 3
SCALE: 3/4" = 1'-0"

REVISIONS

NO.	DATE	
.	.	

STEVEN M. BALDRIDGE LICENSED PROFESSIONAL ENGINEER No. 7675-S HAWAII, U.S.A.

THIS WORK WAS PREPARED BY ME OR UNDER MY SUPERVISION AND CONSISTS OF DRAWINGS FOR THIS PROJECT. WILL BE UNDER MY OBSERVATION, CHAPTER 16-115, DEPARTMENT OF COMMERCE AND CONSUMER AFFAIRS

April 30, 2014
EXP.

FOR BALDRIDGE & ASSOCIATES
STRUCTURAL ENGINEERING, INC.

KAKAAKO WORKFORCE HOUSING PER
SUBCHAPTER 4 OF 2011 MAUKA PLAN AND RULES
801 SOUTH STREET
HONOLULU, HAWAII

GARAGE P.T. SLAB, BEAM & FRAMING DETAILS

KAZU YATO, AIA & ASSOCIATES, INC.
2033 ROUNDTOP TERRACE
HONOLULU, HI 96822
TEL: (808) 945-0040
FAX: (808) 945-0041

DATE	DRAWN	CHECK	FILE
11/08/12	TD	SB	

SHEET

S-7.11

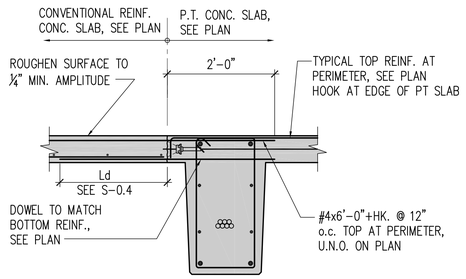

1 S-7.12 ELEV. LOBBY SLAB AT PT BEAM
SCALE: 3/4" = 1'-0"

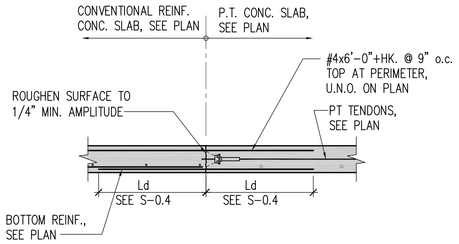

2 S-7.12 ELEV. LOBBY SLAB AT PT BEAM
SCALE: 3/4" = 1'-0"

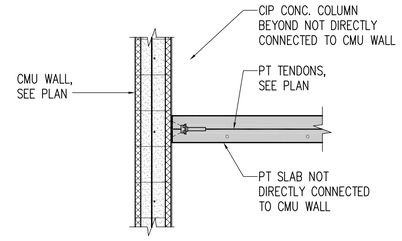

3 S-7.12 ELEV. LOBBY SLAB AT PT BEAM
SCALE: 3/4" = 1'-0"

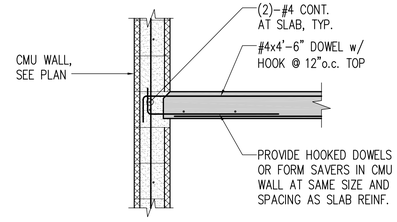

4 S-7.12 ELEV. LOBBY SLAB AT CMU WALL
SCALE: 3/4" = 1'-0"

NOTE:
SEE ARCH. DWGS. FOR TRENCH DIMENSIONS AND LOCATIONS.

5 S-7.12 TRENCH DRAIN SECTION
SCALE: 3/4" = 1'-0"

SEE 6/S-7.11 FOR BALANCE OF INFO

6 S-7.12 ROOF SLAB AT UPTURN BEAM
SCALE: 3/4" = 1'-0"

NO.	DATE	REVISIONS
.	.	PROVIDE FORM SA AT SAME AS SLAE
.	.	C.I.P. CC SEE PLA

STEVEN M. BALDRIDGE LICENSED PROFESSIONAL ENGINEER No. 7879-S U.S.A.

THIS WORK WAS PREPARED BY ME OR UNDER MY SUPERVISION AND CONSTRUCTION OBSERVATION OF THIS PROJECT WILL BE UNDER MY OBSERVATION, CHAPTER 16-115, DEPARTMENT OF COMMERCE AND CONSUMER AFFAIRS
EXP.
April 30, 2014

FOR BALDRIDGE & ASSOCIATES
STRUCTURAL ENGINEERING, INC.

KAKAAKO WORKFORCE HOUSING PER
SUBCHAPTER 4 OF 2011 MAUKA PLAN AND RULES
801 SOUTH STREET
HONOLULU, HAWAII

GARAGE FRAMING DETAILS

KAZU YATO, AIA & ASSOCIATES,INC.
2033 ROUNDTOP TERRACE
HONOLULU, HI 96822
TEL: (808) 945-0340
FAX: (808) 946-0041

DATE	DRAWN	CHECK	FILE
11/08/12	TD	SB	

SHEET

S-7.12

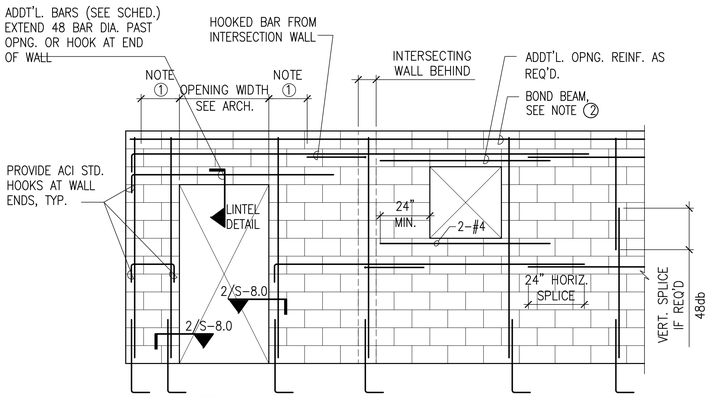

NOTES:

1. EXTEND GROUTED LINTEL A MINIMUM OF 2'-0" BEYOND FACE OF OPENING EACH SIDE.
2. BOND BEAM WITH (1)-#5 HORIZ. BARS AT BOTTOM OF WALL, TOP OF WALL AND ALL FLOOR LEVELS.

CMU LAP SCHEDULE	
BAR SIZE	LAP
#3	18"
#4	24"
#5	30"
#6	36"
#7	42"

CMU WALL REINFORCING			
TYPE	FLOOR	REINFORICNG	
		VERT.	HORIZ.
BEARING	FIRST	#5 @ 16"o.c.	#6 @ 16"o.c.
	BALANCE	#5 @ 24"o.c.	#5 @ 24"o.c.
NON-BEARING	-	#5 @ 24"o.c.	#4 @ 48"o.c.

ADDITIONAL BARS REQUIRED AROUND WALL OPENINGS			
OPNG. WIDTH	CMU LINTEL		COMMENTS
	DEPTH (D)	REINFORCMENT	
8" TO 3'-4"	8"	2-#4	
3'-4" TO 6'-8"	16"	2-#5	

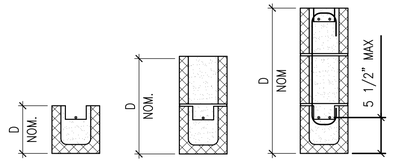

LINTEL DETAIL

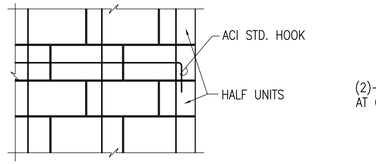

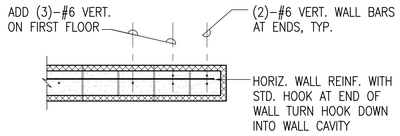

2 / S-8.0 WALL ENDS & JAMBS
SCALE: 3/4" = 1'-0"

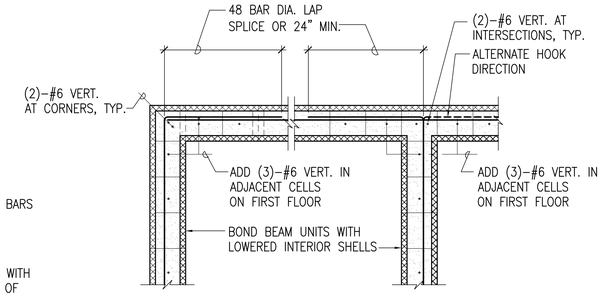

3 / S-8.0 WALL CORNERS & INTERSECTIONS
SCALE: 3/4" = 1'-0"

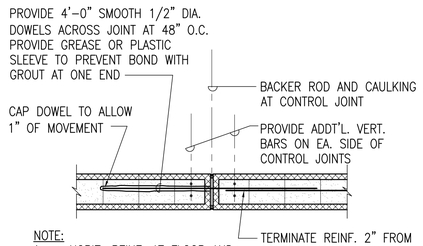

NOTE:

1. HORIZ. REINF. AT FLOOR AND ROOF LINES AND STRUCTURAL LINTELS SHALL BE CONTINUOUS.
2. VERT. JOINTS SHALL BE 30' MAX. SPACING, SEE ARCH. FOR LOCATIONS.

4 / S-8.0 TYP. MASONRY WALL CONTROL JT.
SCALE: 3/4" = 1'-0"

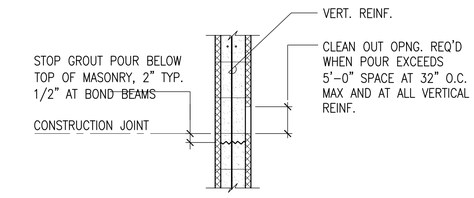

NOTE:
RECONSOLIDATE GROUT AFTER ALLOWING EXCESS WATER TO BE ABSORBED BY THE MASONRY UNITS (3 TO 5 MINUTES)

5 / S-8.0 HORIZ. CONSTRUCTION JOINT
SCALE: 3/4" = 1'-0"

1 / S-8.0 MASONRY WALL ELEVATION
NOT TO SCALE

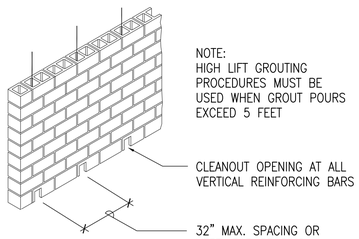

NOTE:

1. GROUT LIFTS MAY BE UP TO 6 FEET HIGH AND MUST BE MECHANICALLY CONSOLIDATED.
2. RECONSOLIDATE THE GROUT AFTER 3 TO 5 MINUTES TO CLOSE ANY VOIDS DUE TO WATER LOSS.
3. PROVIDE CONTROL BARRIERS CONSTRUCTED OF MASONRY UNITS LAID IN THE GROUT SPACE, EXTENDING FULL HEIGHT OF GROUT POUR.

6 / S-8.0 HIGH LIFT CLEANOUTS
NOT TO SCALE

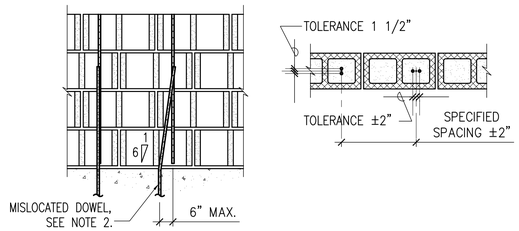

NOTE:

1. TO ENSURE CORRECT PLACEMENT OF STEEL, VERTICAL BARS SHALL BE HELD IN PLACE AT TOP AND BOT. AND AT INTERVALS NOT EXCEEDING 20 BAR DIAMETERS.
2. BEND BARS NO MORE THAN 6" OUT OF POSITION AT A SLOPE OF 1 TO 6 TO PROPERLY ALIGN THEM.

7 / S-8.0 VERT. REINF. TOLERANCE
NOT TO SCALE

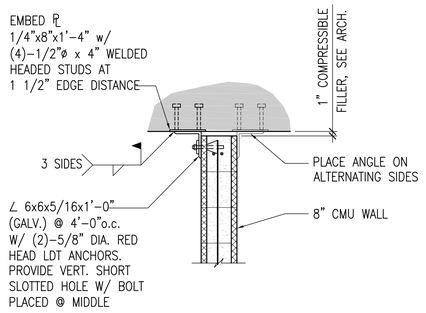

8 / S-8.0 TOP OF NON-BEARING CMU WALL CONN. DETAIL
SCALE: 3/4" = 1'-0"

REVISIONS

NO.	DATE	REVISIONS
.	.	.

STEVEN M. BALDRIDGE LICENSED PROFESSIONAL ENGINEER No. 7879-S HAWAII, U.S.A.

THIS WORK WAS PREPARED BY ME OR UNDER MY SUPERVISION AND DOCUMENTS WERE PREPARED OR WILL BE UNDER MY OBSERVATION, CHAPTER 16-115, DEPARTMENT OF COMMERCE AND CONSUMER AFFAIRS
EXP.
April 30, 2014

FOR BALDRIDGE & ASSOCIATES/ STRUCTURAL ENGINEERING, INC.

KAKAAKO WORKFORCE HOUSING PER
SUBCHAPTER 4 OF 2011 MAUKA PLAN AND RULES
801 SOUTH STREET
HONOLULU, HAWAII

TYPICAL CMU WALL DETAILS

KAZU YATO, AIA & ASSOCIATES,INC.
2033 ROUNDTOP TERRACE
HONOLULU, HI 96822
TEL: (808) 945-0040
FAX: (808) 945-0041

DATE	DRAWN	CHECK	FILE
11/08/12	TD	SB	

SHEET

S-8.0

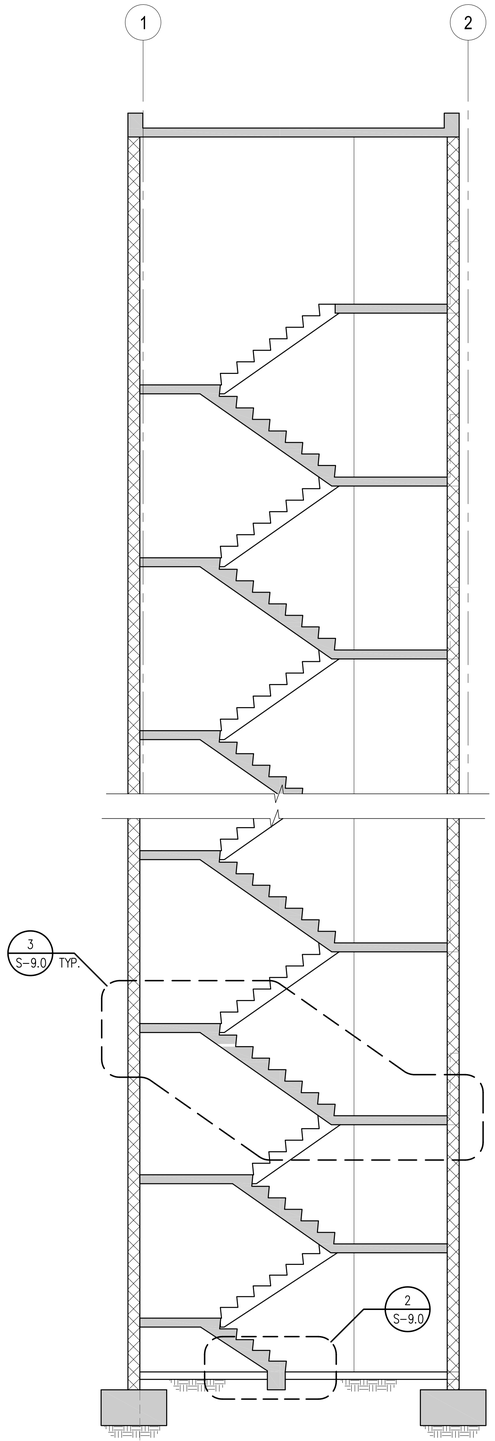

1 / S-9.0 GARAGE STAIR #3 SECTION
SCALE: 1/4" = 1'-0"

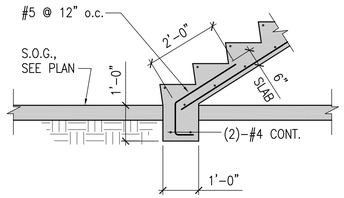

2 / S-9.0 CONCRETE STAIR #3 SECTION
SCALE: 1/2" = 1'-0"

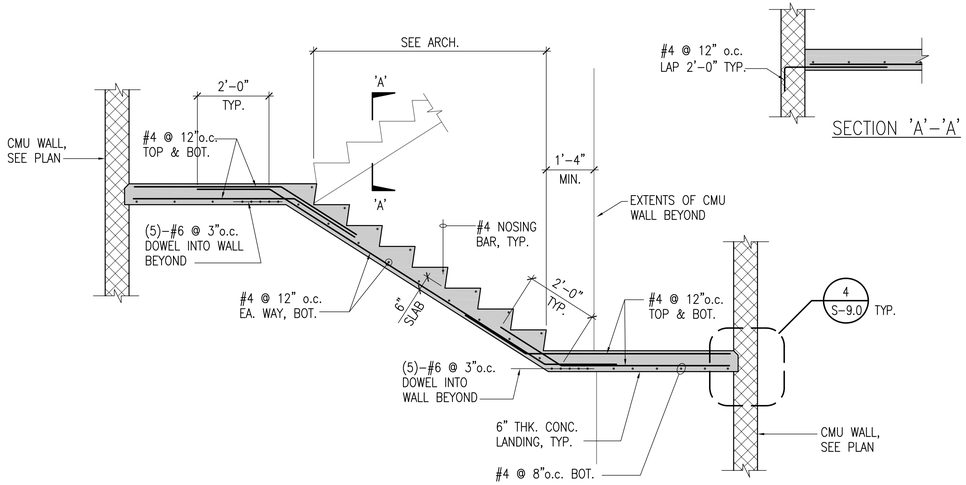

3 / S-9.0 TYP. CONCRETE STAIR #3 SECTION
SCALE: 1/2" = 1'-0"

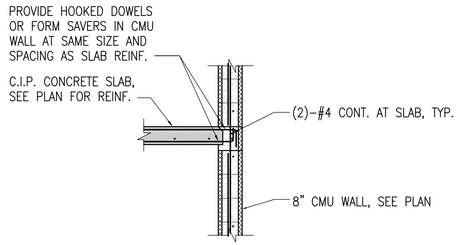

4 / S-9.0 C.I.P. CONC. SLAB AT CMU WALL
SCALE: 1/2" = 1'-0"

NO.	DATE	REVISIONS
.	.	.

STEVEN M. BALDRIDGE LICENSED PROFESSIONAL ENGINEER No. 7879-S * H.A.W.A.I.I. *

THIS WORK WAS PREPARED BY ME OR UNDER MY SUPERVISION AND CONSTRUCTION OF THIS PROJECT WILL BE UNDER MY OBSERVATION, CHAPTER 16-115, DEPARTMENT OF COMMERCE AND CONSUMER AFFAIRS
EXP. April 30, 2014

FOR BALDRIDGE & ASSOCIATES
STRUCTURAL ENGINEERING, INC.

KAKAAKO WORKFORCE HOUSING PER
SUBCHAPTER 4 OF 2011 MAUKA PLAN AND RULES
801 SOUTH STREET
HONOLULU, HAWAII

GARAGE STAIR #3 SECTIONS & DETAILS

KAZU YATO, AIA & ASSOCIATES, INC.
2333 ROUNDTOP TERRACE
HONOLULU, HI 96822
TEL: (808) 945-0040
FAX: (808) 946-0041

DATE	DRAWN	CHECK	FILE
11/08/12	TD	SB	

SHEET

S-9.0

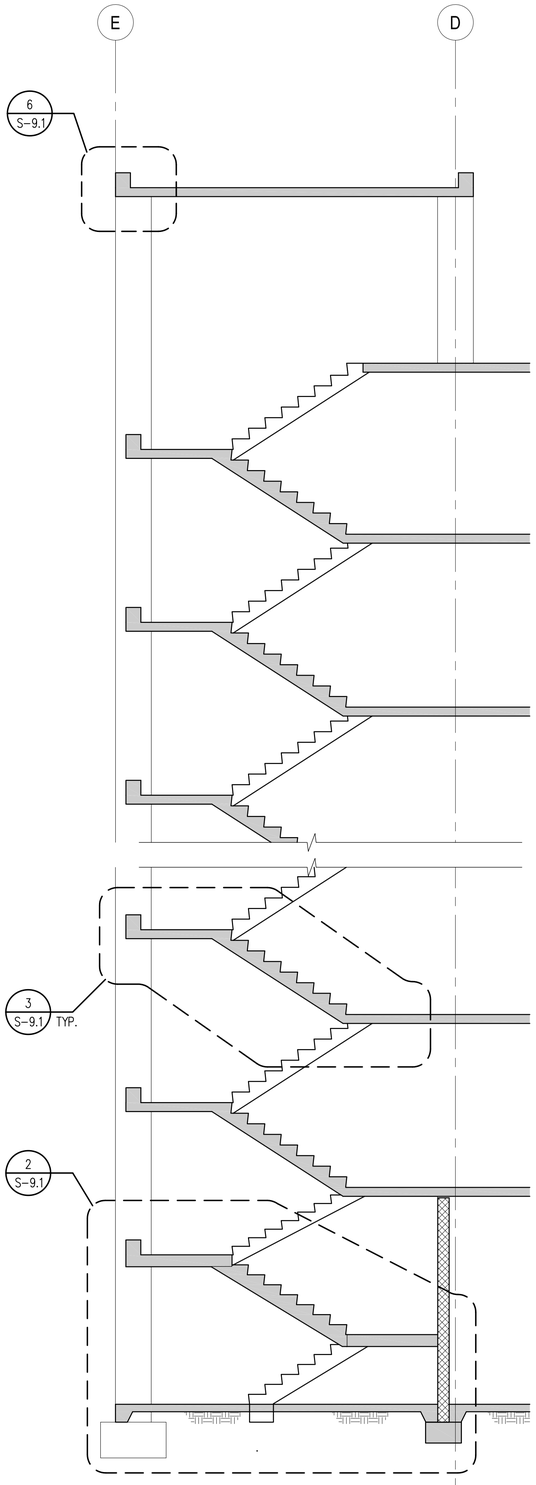

1 S-9.1 GARAGE STAIR #4 SECTION
SCALE: 1/2" = 1'-0"

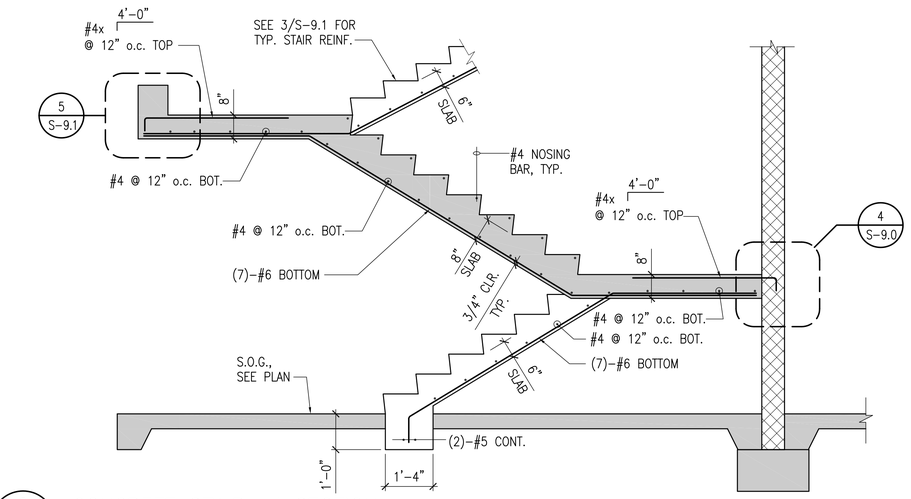

2 S-9.0 CONCRETE STAIR #4 SECTION
SCALE: 1/2" = 1'-0"

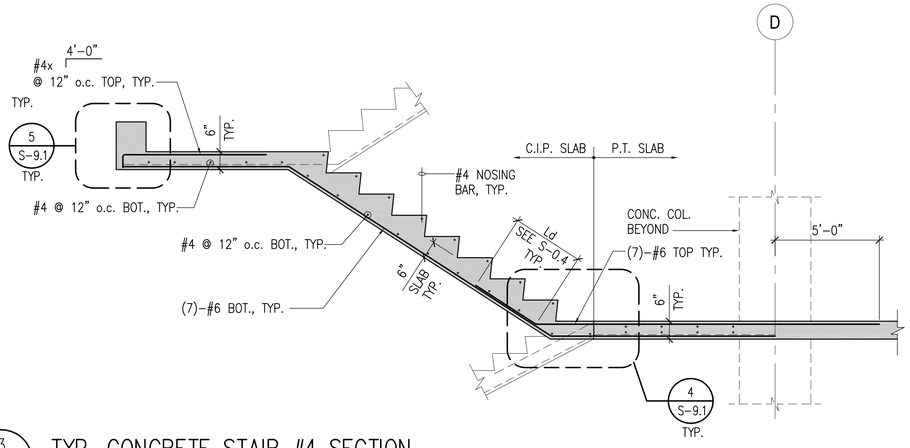

3 S-9.0 TYP. CONCRETE STAIR #4 SECTION
SCALE: 1/2" = 1'-0"

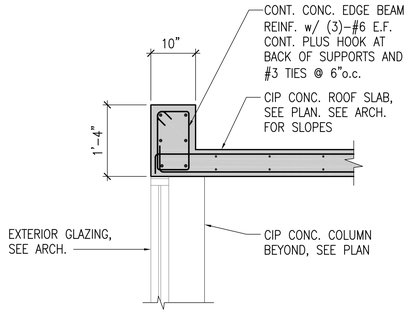

6 S-9.1 STAIR #4 ROOF SLAB EDGE BEAM
SCALE: 3/4" = 1'-0"

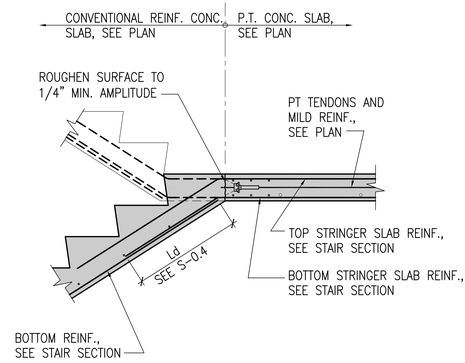

4 S-9.1 CIP CONC. STAIR STRINGER AT PT SLAB
SCALE: 3/4" = 1'-0"

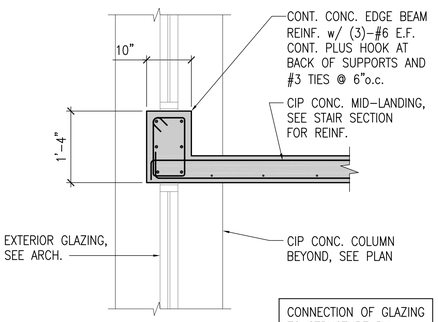

5 S-9.1 STAIR #4 MID-LANDING DETAIL
SCALE: 3/4" = 1'-0"

REVISIONS

NO.	DATE	
.	.	.

STEVEN M. BALDRIDGE LICENSED PROFESSIONAL ENGINEER No. 7675-S HAWAII, U.S.A.

THIS WORK WAS PREPARED BY ME OR UNDER MY SUPERVISION AND CONSTRUCTION OBSERVATION WORK WILL BE UNDER MY OBSERVATION, CHAPTER 16-115, DEPARTMENT OF COMMERCE AND CONSUMER AFFAIRS
EXP. April 30, 2014

FOR BALDRIDGE & ASSOCIATES/ STRUCTURAL ENGINEERING, INC.

KAKAAKO WORKFORCE HOUSING PER SUBCHAPTER 4 OF 2011 MAUKA PLAN AND RULES
801 SOUTH STREET
HONOLULU, HAWAII

GARAGE STAIR #4 SECTIONS & DETAILS

KAZU YATO, AIA & ASSOCIATES,INC.
2033 ROUNDTOP TERRACE HONOLULU, HI 96822
TEL: (808) 945-0040 FAX: (808) 945-0041

DATE	DRAWN	CHECK	FILE
11/06/12	TD	SB	

SHEET
S-9.1

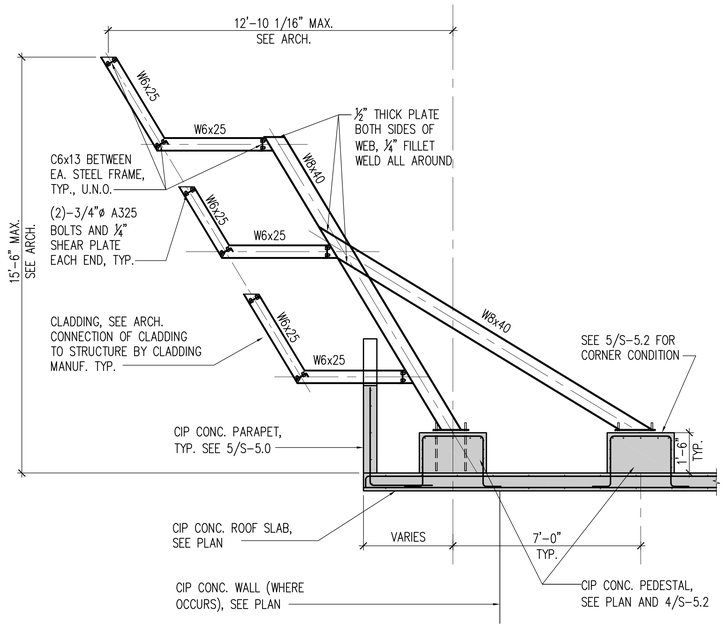

1 S-10.0 **TYP. ROOF STEEL FRAME SECTION**
SCALE: 3/8" = 1'-0"

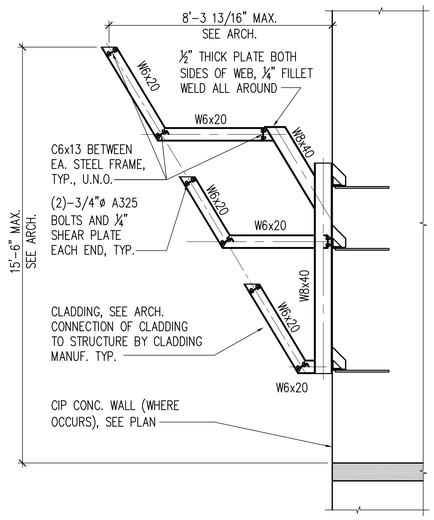

2 S-10.0 **ROOF STEEL FRAME AT ELEV. WALLS**
SCALE: 3/8" = 1'-0"

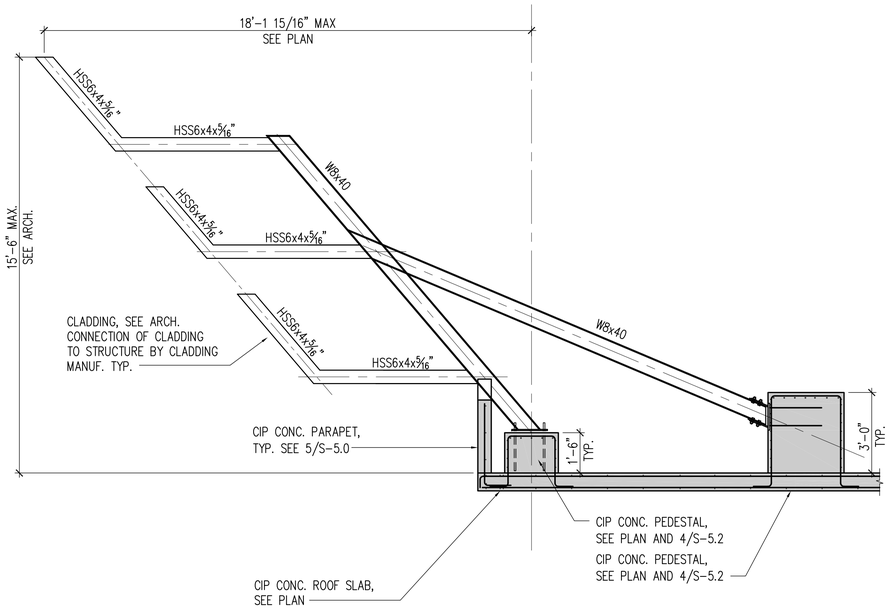

3 S-10.0 **TYP. ROOF STEEL FRAME SECTION AT CORNERS**
SCALE: 3/8" = 1'-0"

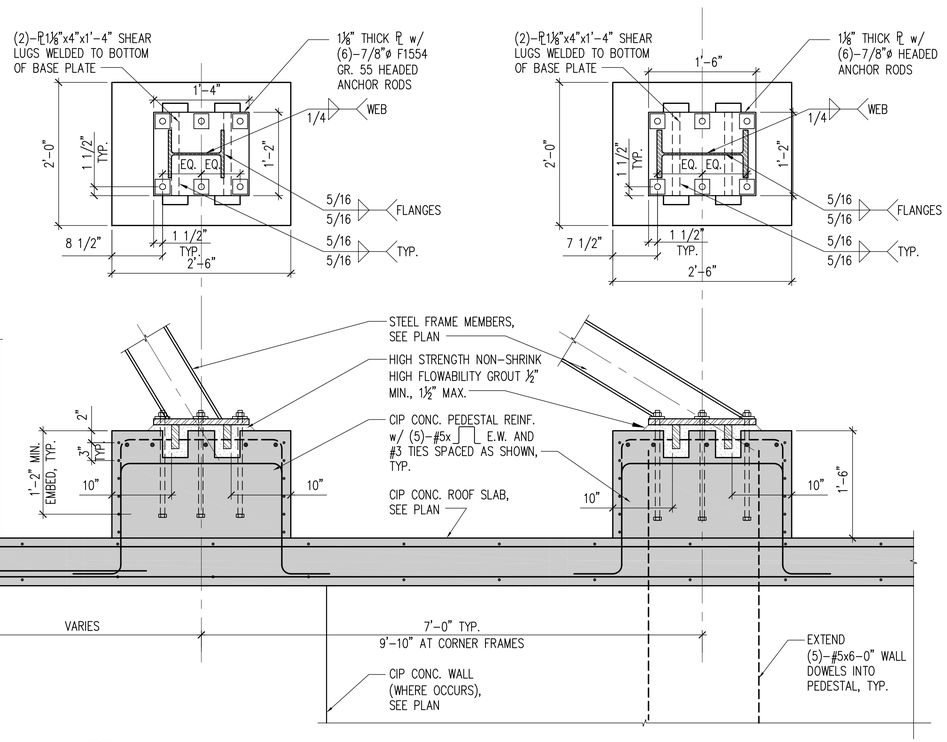

4 S-10.0 **TYP. ROOF FRAME BASE SECTIONS**
SCALE: 1" = 1'-0"

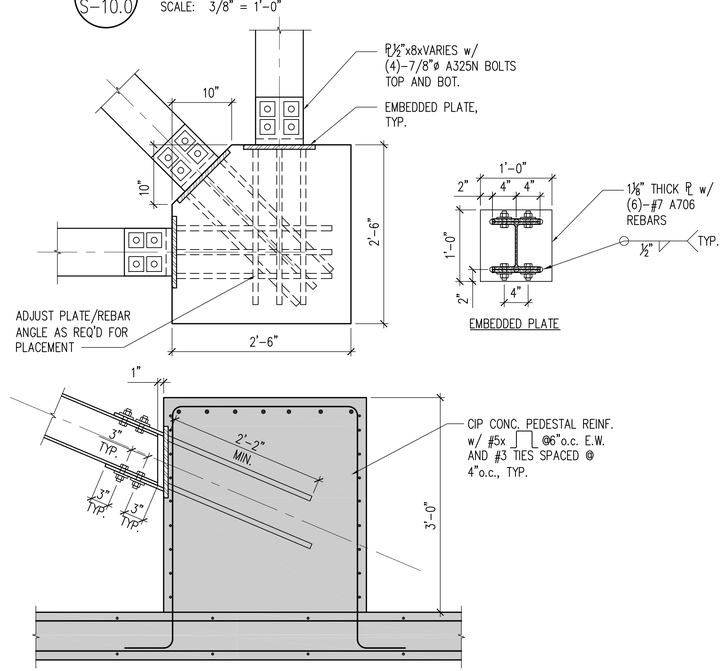

5 S-10.0 **ROOF FRAME BASE AT CORNER**
SCALE: 1" = 1'-0"

REVISIONS

NO.	DATE
.	.
.	.

STEVEN M. BALDRIDGE — LICENSED PROFESSIONAL ENGINEER — No. 7875-S — U.S.A.

THIS WORK WAS PREPARED BY ME OR UNDER MY SUPERVISION AND COMPLIES WITH APPLICABLE CODES AND REGULATIONS AS KNOWN TO ME, AT THE TIME WORK WAS PERFORMED. IT WILL BE UNDER MY OBSERVATION. CHAPTER 16-115, DEPARTMENT OF COMMERCE AND CONSUMER AFFAIRS

EXP. April 30, 2014

FOR BALDRIDGE & ASSOCIATES
STRUCTURAL ENGINEERING, INC.

KAKAAKO WORKFORCE HOUSING PER SUBCHAPTER 4 OF 2011 MAUKA PLAN AND RULES

801 SOUTH STREET
HONOLULU, HAWAII

TOWER ROOF SCREEN SECTIONS & DETAILS

KAZU YATO, AIA & ASSOCIATES, INC.
2033 ROUNDTOP TERRACE
HONOLULU, HI 96822
TEL: (808) 945-0040
FAX: (866) 945-0041

DATE	DRAWN	CHECK	FILE
11/05/12	TD	SB	

SHEET

S-10.0

PLUMBING NOTES:

1. CONFORM TO ALL REQUIREMENTS OF THE BUILDING, PLUMBING, AND ELECTRICAL CODES OF THE CITY AND COUNTY OF HONOLULU, STATE OF HAWAII HEALTH REGULATIONS, FIRE DEPARTMENT REGULATIONS, MANUFACTURER'S RECOMMENDATIONS AND OTHER APPLICABLE REGULATIONS.
2. EXAMINE ALL PROJECT PLANS AND BECOME FAMILIAR WITH ALL EXISTING CONDITIONS AND THE EXTENT OF REMOVAL, RELOCATION AND/OR NEW WORK PRIOR TO BIDDING. NOTIFY AND COORDINATE WITH THE ENGINEER FOR ANY MAJOR DEVIATIONS OR DISCREPANCIES DISCOVERED IN THE PLANS AND SPECIFICATIONS DUE TO UNFORESEEN OR VARYING FIELD CONDITIONS.
3. INSTALLATION SHALL BE GUARANTEED TO BE FREE FROM DEFECTS FOR ONE YEAR FROM FINAL DATE OF ACCEPTANCE OF THE PROJECT AS A WHOLE.
4. CONTRACTOR SHALL VERIFY ALL FIELD CONDITIONS, INCLUDING EXISTING LINE SIZES, CONDITIONS, AND INVERTS PRIOR TO BID AND CONSTRUCTION.
5. THE DRAWINGS AND SPECIFICATIONS ARE INTENDED TO COVER THE COMPLETE INSTALLATION OF SYSTEMS TO FUNCTION AS DESCRIBED AND SPECIFIED. THE OMISSION OF REFERENCE TO ANY NECESSARY ITEM OF LABOR OR MATERIAL SHALL NOT RELIEVE THE CONTRACTOR FROM PROVIDING SUCH LABOR AND MATERIAL AT NO ADDITIONAL COST TO THE OWNER.
6. PAY FOR ALL PERMITS AND APPLICATIONS.
7. CAULK ALL PENETRATIONS WATERTIGHT. PROVIDE ALL CUTTING, PATCHING, AND RESTORING OF EXISTING SURFACES TO MATCH ORIGINAL SURFACE FINISHES. SPOT PAINT TO MATCH EXISTING SURFACES/COLOR.
8. PREPARE SIX (6) SETS OF SHOP DRAWINGS SUBMITTED TO THE ENGINEER FOR APPROVAL PRIOR TO THE START OF WORK. NO REPRODUCTIONS OF ANY KIND OF THE CONTRACT DOCUMENTS SHALL BE ACCEPTABLE AS SHOP DRAWINGS. PROVIDE ONE SET OF REPRODUCIBLE AS-BUILT DRAWINGS SHOWING THE ACTUAL INSTALLED CONDITIONS AND SUBMIT TO THE OWNERS UPON COMPLETION OF WORK.
9. ALL EQUIPMENT AND FIXTURES SHALL BE CAPABLE OF FITTING INTO THE SPACES ALLOTTED WHILE MEETING THE MANUFACTURER'S RECOMMENDED ACCESS REQUIREMENTS. REVIEW ALL SPACES WHERE EQUIPMENT AND FIXTURES ARE TO BE INSTALLED PRIOR TO ORDERING OF ITEMS AND NOTIFY THE ARCHITECT/ENGINEER OF ANY INADEQUATE CLEARANCES OR CONDITIONS THAT WILL PREVENT THE PROPER INSTALLATION, MAINTENANCE, AND OPERATION OF THE EQUIPMENT AND FIXTURES.
10. DRAWINGS ARE DIAGRAMMATIC IN NATURE AND DO NOT SHOW EVERY EXACT DETAIL OF PIPING AND DUCTWORK. PROVIDE OFFSETS AS NECESSARY TO AVOID LOCAL OBSTRUCTIONS OR INTERFERENCES WITH OTHER TRADES. REVIEW ALL PIPING AND DUCT RUNS PRIOR TO FABRICATION AND IMMEDIATELY NOTIFY THE ARCHITECT/ENGINEER OF ANY INTERFERENCES AND/OR LACK OF ADEQUATE CLEARANCES.
11. SHOULD PROJECT CONDITIONS REQUIRE REARRANGEMENT OF WORK, MARK SUCH CHANGES ON THE AS-BUILT DRAWINGS. IF THESE CHANGES REQUIRE ALTERNATE METHODS TO THOSE APPROVED BY THE CONTRACT DOCUMENTS, SUBMIT SHOP DRAWINGS SHOWING THE PROPOSED ALTERNATE METHODS TO THE ARCHITECT/ENGINEER FOR REVIEW/APPROVAL PRIOR TO PROCEEDING WITH WORK.
12. COORDINATE ALL WORK WITH THE BUILDING SUPERVISOR. SCHEDULE OFF-HOUR WORK WHEN REQUIRED TO MINIMIZE DISRUPTIONS.
13. COORDINATE ALL SWITCH, THERMOSTAT, FIRE EXTINGUISHER, ETC. LOCATIONS WITH USER/ENGINEER PRIOR TO INSTALLATION TO AVOID INTERFERENCES WITH PAINTING, BULLETIN BOARDS, FURNITURE, ETC. ANY ITEM NOT PROPERLY COORDINATED SHALL BE RELOCATED AT NO ADDITIONAL COST TO THE OWNER.
14. ALL CONTROL ITEMS SHALL BE ADA ACCESSIBLE AND SHALL BE MOUNTED AT 44" ABOVE THE FINISHED FLOOR PER ADAAG REQUIREMENTS OR ACCORDING TO OWNER'S INSTRUCTIONS.
15. COORDINATE ALL WORK WITH OTHER TRADES TO AVOID INTERFERENCES AND DELAYS.
16. EXISTING PLUMBING/STORM DRAIN/CONDUITS SHALL BE REHUNG/REROUTED AS REQUIRED TO ACCOMMODATE NEW WORK. VERIFY ALL WASTE AND WATER INVERTS, LOCATIONS, SIZES, AND CONDITIONS OF PIPING.
17. REPAIR ANY DAMAGE TO EXISTING CONSTRUCTION RESULTING FROM THE INSTALLATION OF MECHANICAL ITEMS. THE AREAS REPAIRED SHALL MATCH THE ADJACENT SURFACES IN COLOR AND TEXTURE.
18. SEISMICALLY BRACE ALL EQUIPMENT AND PIPING IN ACCORDANCE WITH CURRENT BUILDING CODES AND THEIR RESPECTIVE SEISMIC ZONE LOCATIONS.
19. PROVIDE DIELECTRIC UNIONS OR SEPARATIONS AT ALL DISSIMILAR METALS. PROVIDE UNIONS AFTER ALL SHUTOFF VALVES.
20. PROVIDE ACCESS PANELS FOR ALL ITEMS UNDER THIS SECTION REQUIRING SERVICING, INSPECTION, MAINTENANCE, AND ADJUSTMENT.
21. PROVIDE ESCUTCHEON PLATES AT ALL EXPOSED WALL PENETRATIONS IN FINISHED AREAS, EXTERIOR WALL, ETC.
22. ALL PENETRATIONS THRU EXISTING WALLS, FOUNDATIONS, AND FLOOR SLABS SHALL BE IN TOTAL COMPLIANCE WITH ARCHITECTURAL/STRUCTURAL PROCEDURES AND DRAWINGS.
23. ALL PENETRATIONS THRU RATED WALLS AND CEILINGS SHALL BE EQUIPPED WITH APPROVED FIRE STOPPING.
24. DRAWING FILES WILL NOT BE AVAILABLE TO CONTRACTORS FOR SHOP DRAWINGS OR ANY OTHER PURPOSE.
25. PROVIDE ISOLATION VALVES ON PIPING BRANCH LINES AND VOLUME DAMPERS ON DUCTWORK BRANCH LINES WHETHER SHOWN ON THE DRAWINGS OR NOT.
26. PATCH AND PAINT ALL EXPOSED MATERIAL TO MATCH ADJACENT SURFACES OR AS INDICATED.
27. CLEAN UP WORK AREAS AND FIXTURES. ADJUST SYSTEM FOR PROPER OPERATION, READY FOR USE. STERILIZE WATER SYSTEM FOR 24 HOURS WITH 100 PPM CHLORINE INTRODUCED INTO THE LINES IN AN APPROVED MANNER. OPERATE ALL VALVES DURING CONTACT PERIOD. FLUSH SYSTEM UNTIL CHLORINE IS LESS THAN 0.2 PPM.

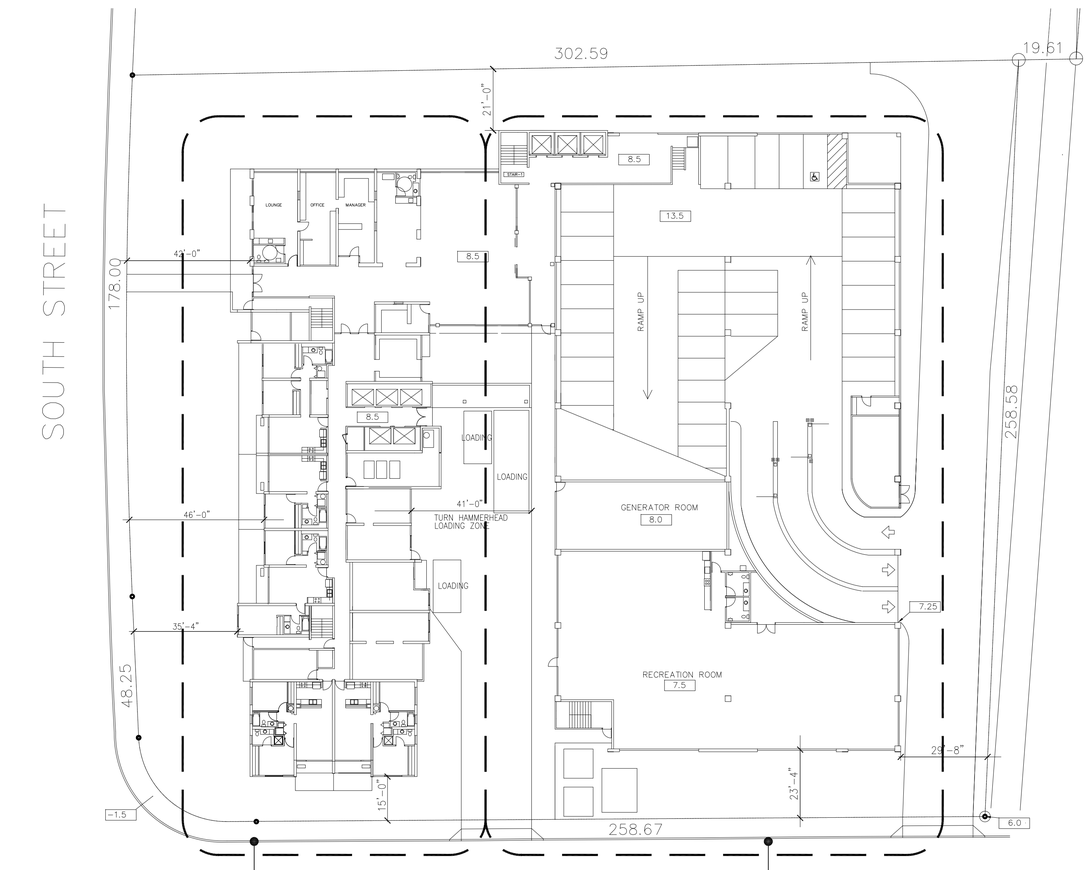

SEE 1/P1.1 FOR GROUND FLOOR PLUMBING PLAN

SEE 1/P1.2 FOR TYPICAL PLUMBING PLAN

SEE 1/P1.4 FOR ROOF PLUMBING PLAN

SEE 1/P1.5 FOR LEVEL 1 PLUMBING PLAN

SEE 1/P1.6 FOR TYPICAL PLUMBING PLAN

SEE 1/P1.7 FOR LEVEL 10 FIRE SPRINKLER PLAN

SEE 1/P1.8 FOR LEVEL 11 FIRE SPRINKLER PLAN

1 / P0.1 **PLUMBING SITE PLAN**
NOT TO SCALE

NORTH

PLUMBING LEGEND

SYMBOL	ABBRV	DESCRIPTION
	ALAV	ACCESIBLE LAVATORY
	AWC	ACCESIBLE WATER CLOSET
	CLG	CEILING
	CO	CLEANOUT
	CW	COLD WATER
	DN	DOWN
	(E) or EXST	EXISTING
	FCO	FLOOR CLEANOUT
	FIN FL	FINISH FLOOR
	FD	FLOOR DRAIN
	FSK	FLOOR SINK
	G	NATURAL GAS
	HB	HOSE BIB
	HS	HAND SINK
	HW	HOT WATER
	HWR	HOT WATER RETURN
	(N)	NEW
	POC	POINT OF CONNECTION
	POR	POINT OF REMOVAL
	S	SANITARY
	TP	TRAP PRIMER
	TYP	TYPICAL
	V	VENT
	VTR	VENT THRU ROOF
	WC	WATER CLOSET
	WCO	WALL CLEANOUT
	WHA	WATER HAMMER ARRESTOR

ENERGY CODE COMPLIANCE

CITY AND COUNTY OF HONOLULU
REVISED ORDINANCE CHAPTER 32
HONOLULU COUNTY CODE 1990, AS AMENDED

TO THE BEST OF MY KNOWLEDGE, THIS PROJECT'S DESIGN SUBSTANTIALLY CONFORMS TO THE BUILDING ENERGY CONSERVATION CODE FOR:

✓ MECHANICAL COMPONENT SYSTEMS

SIGNATURE: R.S. Okuda
NAME: ROSS S. OKUDA
TITLE: PRESIDENT
PE #: 9377-M

ROSS S. OKUDA LICENSED PROFESSIONAL ENGINEER No. 9377-M HAWAII, U.S.A.
EXP. 4-30-2014

REVISIONS | NO. | DATE

ROSS S. OKUDA LICENSED PROFESSIONAL ENGINEER No. 9377-M HAWAII, U.S.A.
Expiration Date: 4/30/2014

THIS PROJECT WAS PREPARED BY ME OR UNDER MY SUPERVISION AND CONSTRUCTION OF THIS PROJECT WILL BE UNDER MY SUPERVISION.

KAKAAKO WORKFORCE HOUSING PER
SUBCHAPTER 4 OF 2011 MAUKA PLAN AND RULES
801 SOUTH STREET
HONOLULU, HAWAII

PLUMBING NOTES, LEGEND, SITE PLAN

KAZU YATO, AIA & ASSOCIATES, INC.
2552 SOUTH BERETANIA STREET
HONOLULU, HI 96826
TEL: (808) 945-2040
FAX: (808) 945-2041

DATE	DRAWN	CHECK	FILE
DATE	MEI	RSO	

SHEET

P0.1

WATER DEMAND FIXTURE UNIT CALCULATIONS

DEMOLITION, NEWS BUILDING

FIXTURE	QUANTITY	FU EACH	TOTAL FU
WATER CLOSET (FLUSH VALVE)	32	6	192
URINAL	11	3	33
LAVATORY	24	1	24
SHOWER	3	2	6
SINK	2	2	4
SERVICE SINK	13	2	26
DRINKING FOUNTAIN	6	1	6
HOSE BIB	21	1	21

SUB TOTAL: 312 FU
113 GPM

DEMOLITION, PRESS BUILDING

FIXTURE	QUANTITY	FU EACH	TOTAL FU
WATER CLOSET (FLUSH VALVE)	14	6	84
URINAL	8	3	24
LAVATORY	16	1	16
SHOWER	12	2	24
SERVICE SINK	9	2	18
DRINKING FOUNTAIN	1	1	1
HOSE BIB	8	1	8

SUB TOTAL: 175 FU
86 GPM

DEMOLITION, WAREHOUSE

FIXTURE	QUANTITY	FU EACH	TOTAL FU
HOSE BIB	3	1	3

SUB TOTAL: 3 FU
3 GPM

GRAND TOTAL: 490 FU
140 GPM

WATER DEMAND FIXTURE UNIT CALCULATIONS

NEW WORK, TOWER – GROUND FLOOR

FIXTURE	QUANTITY	FU EACH	TOTAL FU
WATER CLOSET (FLUSH TANK)	10	1.7	17.0
URINAL	2	1.7	3.4
LAVATORY	10	0.6	6.0
TUB/SHOWER	8	1.6	12.8
SINK	7	1.6	11.2
CLOTHES WASHER	5	2.0	10.0
ICE MAKER	5	0.5	2.5
SERVICE SINK	1	2.0	2.0
HOSE BIB (1ST)	1	2.5	2.5
HOSE BIB (EACH ADDITIONAL)	6	1.0	6.0

SUB TOTAL: 73.4 FU
37 GPM

NEW WORK, TOWER – 2ND THRU 46TH FLOOR (TYPICAL)

FIXTURE	QUANTITY	FU EACH	TOTAL FU
WATER CLOSET (FLUSH TANK)	19	1.7	32.3
LAVATORY	19	0.6	11.4
TUB/SHOWER	18	1.6	28.8
SINK	14	1.6	22.4
CLOTHES WASHER	14	2.0	28.0
ICE MAKER	14	0.5	7.0

SUB TOTAL: 129.9 FU
51 GPM

x 45 FLOORS: 5,845.5 FU
750 GPM

NEW WORK, TOWER – ROOF

HOSE BIB	1	1.0	1.0
TRASH CHUTE WASH UNIT	1	1.0	1.0

SUB TOTAL: 2.0 FU
2 GPM

NEW WORK, GARAGE

WATER CLOSET (FLUSH TANK)	2	1.7	3.4
URINAL	2	1.7	3.4
LAVATORY	2	0.6	1.2
SINK	1	1.6	1.6
LAUNDRY TRAY	2	2.0	4.0
HOSE BIB	23	1.0	23.0

SUB TOTAL: 36.6 FU
22 GPM

GRAND TOTAL: 5,957.5 FU
800 GPM

BWS FLOW REQUIREMENTS

PREMISE I.D. NUMBER: 1000071168
METER NUMBER (M/N): 5281777

	DESCRIPTION	FU	GPM	GPD
A.	PROPOSED DOMESTIC: (ALL FIXTURES BEING INSTALLED)	5,957.5	800	24,000
B.	PROPOSED IRRIGATION:	20.0	15	2,975
C.	TOTAL PROPOSED:	5,977.5	800	24,000
D.	DEMOLITION: (ALL FIXTURES BEING REMOVED)	490.0	140	14,700
E.	NET CHANGE: (SUBTRACT "D" FROM "C" ABOVE)	5,487.5	700	21,000
F.	EXISTING TO REMAIN: (OTHER FIXTURES SERVICED BY THIS METER BUT NOT AFFECTED BY PROJECT)	0	0	0
G.	GRAND TOTAL: (ADD "C" AND "F" ABOVE)	5,977.5	800	24,000

HYDRAULIC CALCULATIONS (BP-1)

PIPING AND FITTING LOSSES: 650 FT x 4' LOSS/100'	= 26.0 FT
ELEVATION LOSSES:	= 400.0 FT
METER LOSS: 3 PSI	= 6.9 FT
BACKFLOW PREVENTER & STRAINER LOSS: 10 PSI MAX	= 23.1 FT
INTERNAL PUMP STATION LOSSES: 5 PSI	= 11.5 FT
PRESSURE REQUIRED AT REMOTE FIXTURE: 30 PSI	= 69.1 FT
TOTAL PRESSURE REQUIRED:	= 536.6 FT
RESIDUAL STREET PRESSURE AT 750 GPM: 67 PSI	= 154.5 FT
PUMP HEAD REQUIRED:	= 382.1 FT
SAFETY FACTOR: 10%	= 38.2 FT
TOTAL:	= 420.3 FT
SAY:	= 420.0 FT

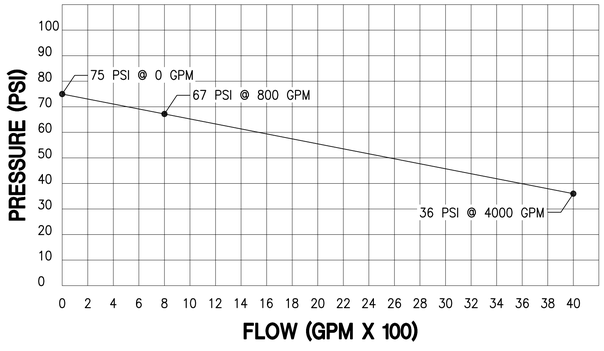

REVISIONS

NO.	DATE	
1	4/15/13	ADDENDUM 1

ROSS S. OKUDA
LICENSED PROFESSIONAL ENGINEER
No. 9377-M
HAWAII, U.S.A.
Expiration Date: 4/30/2014

THIS PROJECT WAS PREPARED BY ME OR UNDER MY SUPERVISION AND CONSTRUCTION OF THIS PROJECT WILL BE UNDER MY SUPERVISION.

KAKAAKO WORKFORCE HOUSING PER
SUBCHAPTER 4 OF 2011 MAUKA PLAN AND RULES
801 SOUTH STREET
HONOLULU, HAWAII

PLUMBING CALCS

KAZU YATO, AIA & ASSOCIATES, INC.
2003 SOUTH KING STREET
HONOLULU, HI 96826
TEL: (808) 945-0040
FAX: (808) 945-0041

DATE	DATE	MEI	CHECK	FILE
	DRAWN		KSO	

SHEET
P0.2
1

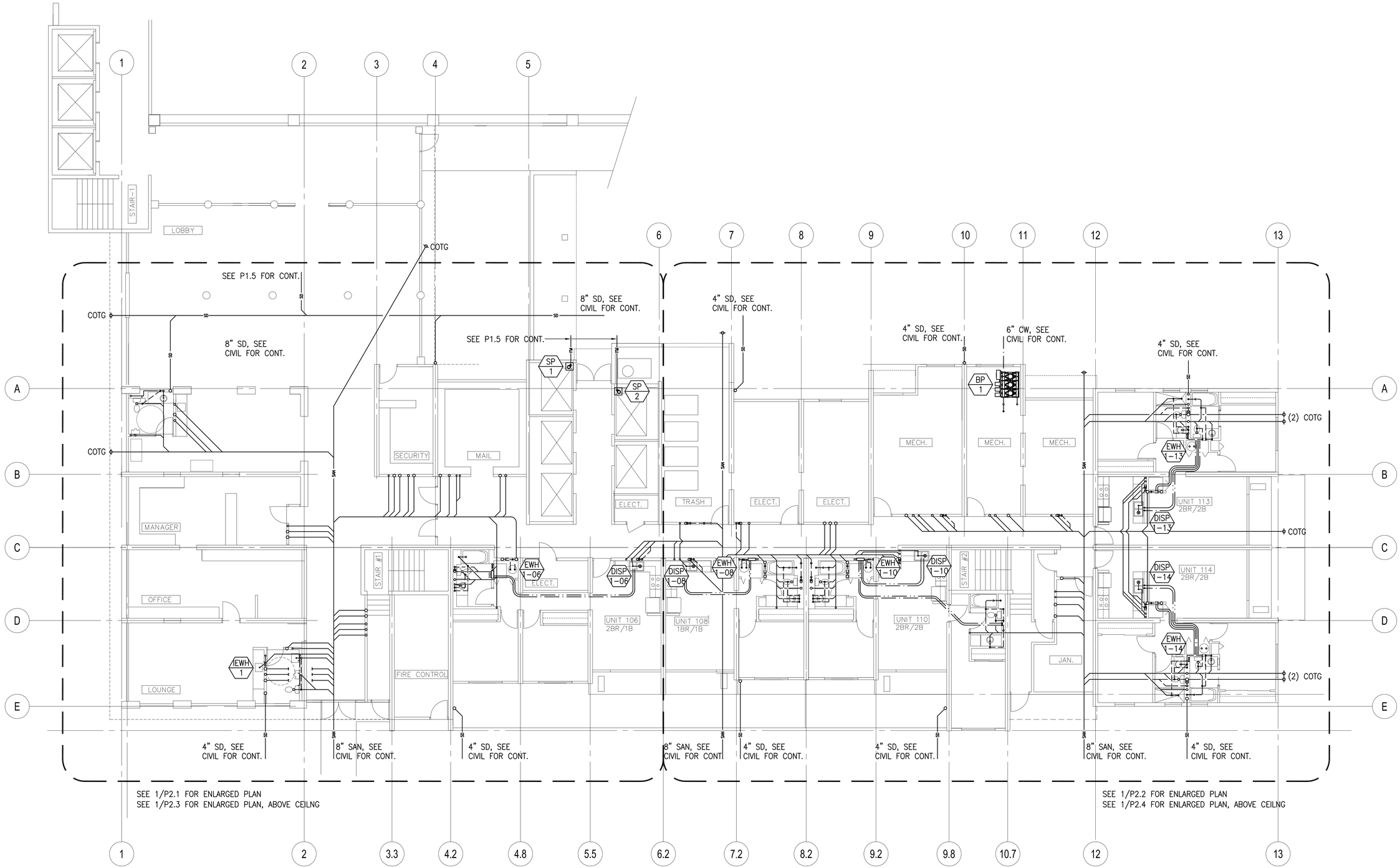

1 / P1.1 **TOWER - GROUND FLOOR PLUMBING PLAN**
SCALE: 1/8" = 1'-0"

0 8' 16' 24'
SCALE: 1/8"=1'-0"

NORTH

REVISIONS

NO.	DATE

ROSS S. OKUDA
LICENSED PROFESSIONAL ENGINEER
No. 9377-M
HAWAII, U.S.A.
Expiration Date: 4/30/2014

THIS PROJECT WAS PREPARED BY ME OR UNDER MY SUPERVISION AND CONSTRUCTION OF THIS PROJECT WILL BE UNDER MY SUPERVISION.

KAKAAKO WORKFORCE HOUSING PER
SUBCHAPTER 4 OF 2011 MAUKA PLAN AND RULES
801 SOUTH STREET
HONOLULU, HAWAII

TOWER - GROUND FLOOR PLUMBING PLAN

KAZU YATO, AIA & ASSOCIATES, INC.
2033 ROUNDTOP TERRACE
HONOLULU, HI 96822
TEL: (808) 945-0040
FAX: (808) 945-0041

DATE DATE
DRAWN MEI
CHECK RSD
FILE

SHEET
P1.1

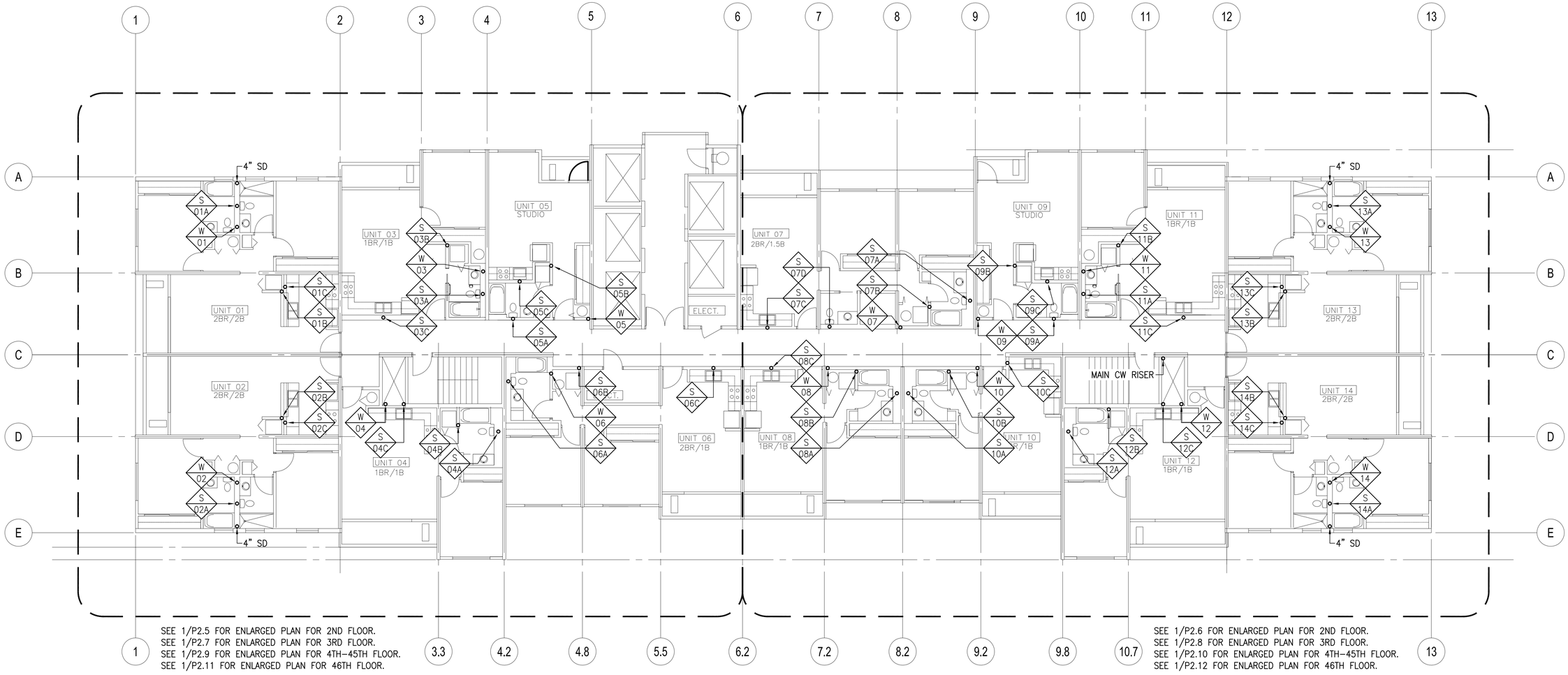

1/P1.2 TOWER - TYPICAL PLUMBING PLAN

SCALE: 1/8" = 1'–0" 2ND – 46TH FLR

0 8' 16' 24'

SCALE: 1/8"=1'–0"

NORTH

NO.	DATE	REVISIONS

ROSS S. OKUDA
LICENSED PROFESSIONAL ENGINEER
No. 9377-M
HAWAII, U.S.A.
Expiration Date: 4/30/2014

THIS PROJECT WAS PREPARED BY ME OR UNDER MY SUPERVISION AND CONSTRUCTION OF THIS PROJECT WILL BE UNDER MY SUPERVISION.

KAKAAKO WORKFORCE HOUSING PER SUBCHAPTER 4 OF 2011 MAUKA PLAN AND RULES

801 SOUTH STREET
HONOLULU, HAWAII

TOWER - TYPICAL PLUMBING PLAN, 2ND - 46TH FLOOR

KAZU YATO, AIA & ASSOCIATES, INC.
2833 ROBERTS TERRACE
HONOLULU, HI 96822
TEL: (808) 945-2040
FAX: (808) 945-2041

DATE	DRAWN	CHECK	FILE
DATE	MEI	RSO	

SHEET

P1.2

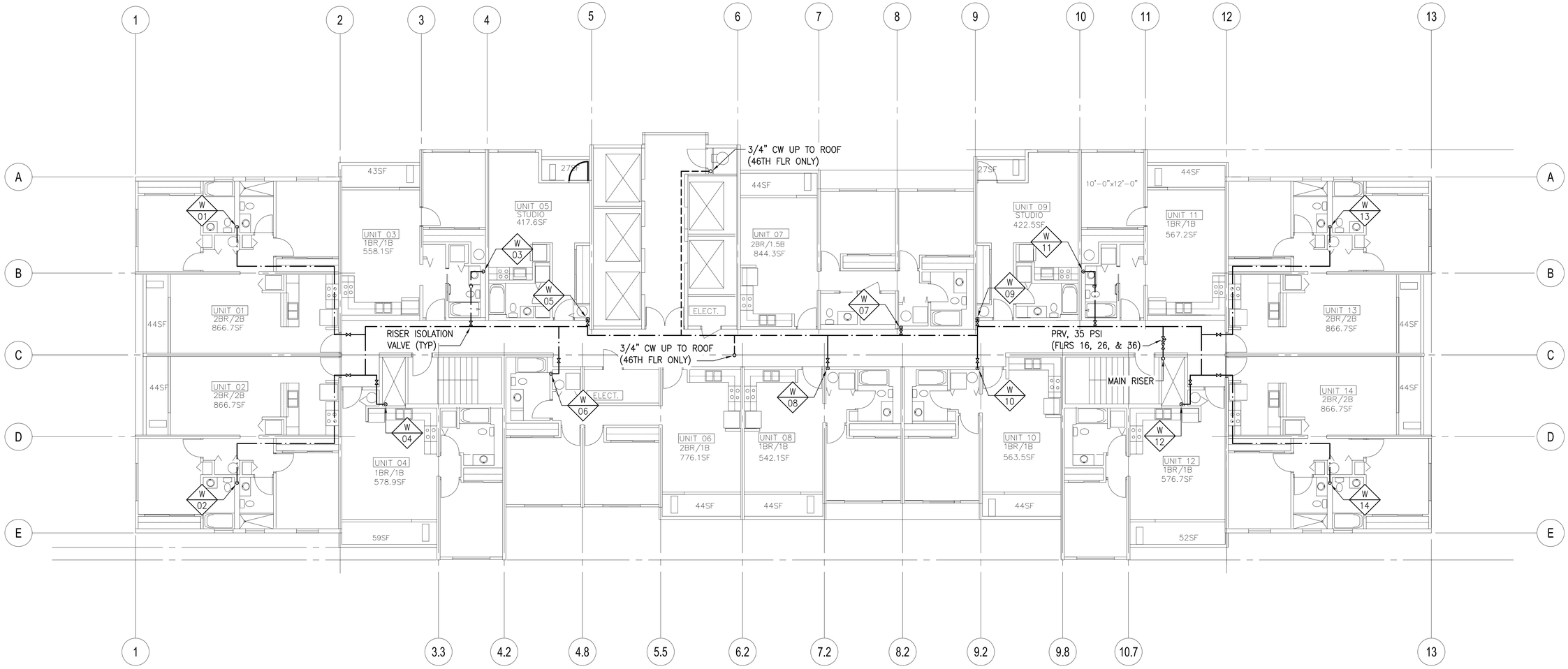

1 / P1.3 TOWER - TYPICAL WATER DISTRIBUTION PLAN

SCALE: 1/8" = 1'-0"

OCCURS AT FLOORS: 16, 26, 36, & 46

0 8' 16' 24'

SCALE: 1/8"=1'-0"

NORTH

REVISIONS

NO.	DATE

ROSS S. OKUDA
LICENSED PROFESSIONAL ENGINEER
No. 9377-M
HAWAII, U.S.A.
Expiration Date: 4/30/2014

THIS PROJECT WAS PREPARED BY ME OR UNDER MY SUPERVISION AND CONSTRUCTION OF THIS PROJECT WILL BE UNDER MY SUPERVISION.

KAKAAKO WORKFORCE HOUSING PER
SUBCHAPTER 4 OF 2011 MAUKA PLAN AND RULES
801 SOUTH STREET
HONOLULU, HAWAII

TOWER - TYPICAL WATER DISTRIBUTION PLAN

KAZU YATO, AIA & ASSOCIATES, INC.
2033 ROUNDTOP TERRACE
HONOLULU, HI 96822
TEL: (808) 945-0040
FAX: (808) 945-0041

DATE	DATE	DRAWN	MEI	CHECK	RSD	FILE

SHEET

P1.3

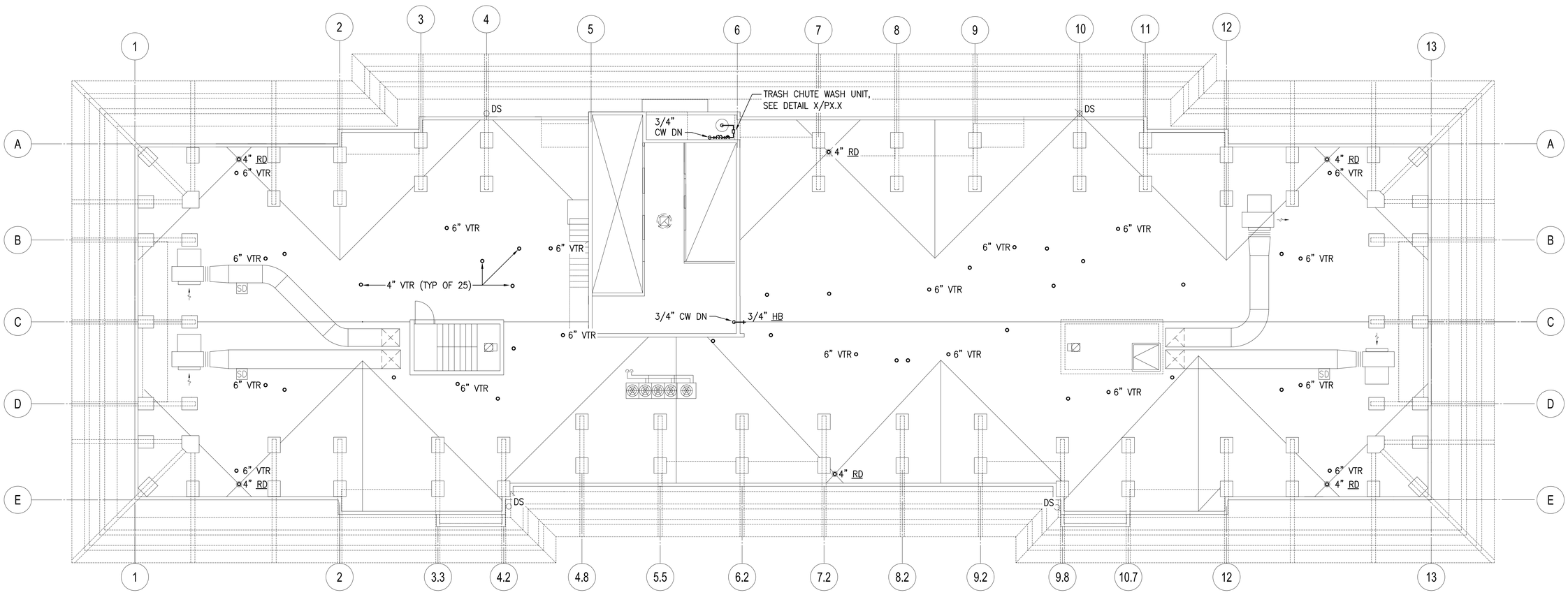

1 / P1.2 **TOWER - PLUMBING ROOF PLAN**
SCALE: 1/8" = 1'-0"

0 8' 16' 24'
SCALE: 1/8"=1'-0"

NORTH

REVISIONS

NO.	DATE

ROSS S. OKUDA
LICENSED PROFESSIONAL ENGINEER
No. 9377-M
HAWAII, U.S.A.
Expiration Date: 4/30/2014

THIS PROJECT WAS PREPARED BY ME OR UNDER MY SUPERVISION AND CONSTRUCTION OF THIS PROJECT WILL BE UNDER MY SUPERVISION.

KAKAAKO WORKFORCE HOUSING PER
SUBCHAPTER 4 OF 2011 MAUKA PLAN AND RULES
801 SOUTH STREET
HONOLULU, HAWAII

TOWER - PLUMBING ROOF PLAN

KAZU YATO, AIA & ASSOCIATES, INC.
2033 ROUNDTOP TERRACE
HONOLULU, HI 96822
TEL: (808) 945-0040
FAX: (808) 945-0041

DATE	DATE
DRAWN	MEI
CHECK	RSD
FILE	

SHEET

P1.4

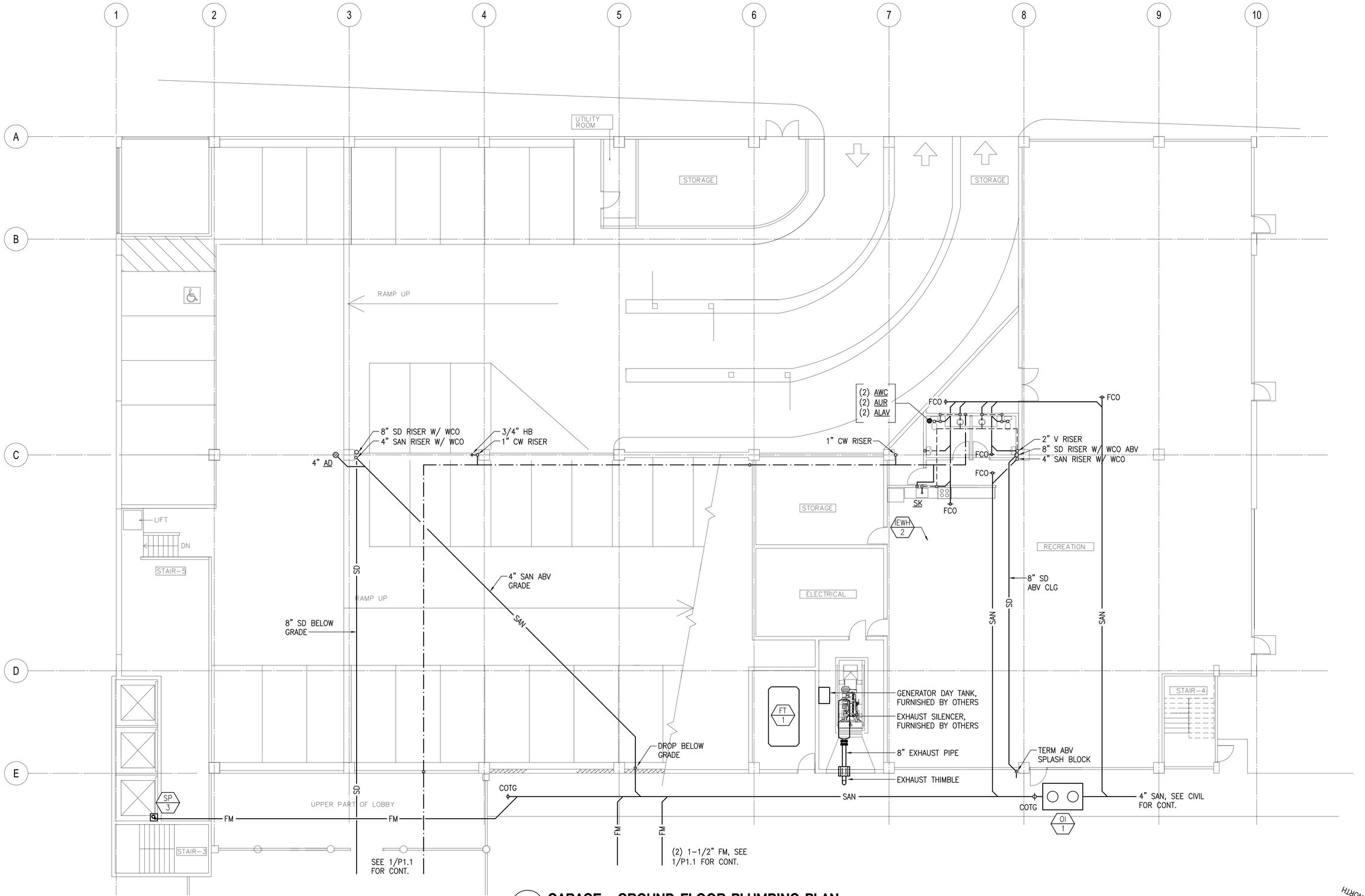

1 / P1.5 **GARAGE - GROUND FLOOR PLUMBING PLAN**
SCALE: 1/8" = 1'-0"

0 8' 16' 24'
SCALE: 1/8"=1'-0"

NORTH

REVISIONS

NO.	DATE

ROSS S. OKUDA
LICENSED PROFESSIONAL ENGINEER
No. 9377-M
HAWAII, U.S.A.
Expiration Date: 4/30/2014

THIS PROJECT WAS PREPARED BY ME OR UNDER MY SUPERVISION AND CONSTRUCTION OF THIS PROJECT WILL BE UNDER MY SUPERVISION.

KAKAAKO WORKFORCE HOUSING PER
SUBCHAPTER 4 OF 2011 MAUKA PLAN AND RULES

801 SOUTH STREET
HONOLULU, HAWAII

GARAGE - GROUND FLOOR PLUMBING PLAN

KAZU YATO, AIA & ASSOCIATES, INC.
2222 KAPIOLANI TERRACE
HONOLULU, HI 96822
TEL: (808) 945-2040
FAX: (808) 945-2041

DATE	DATE	DRAWN	MEI	CHECK	KSO	FILE

SHEET

P1.5

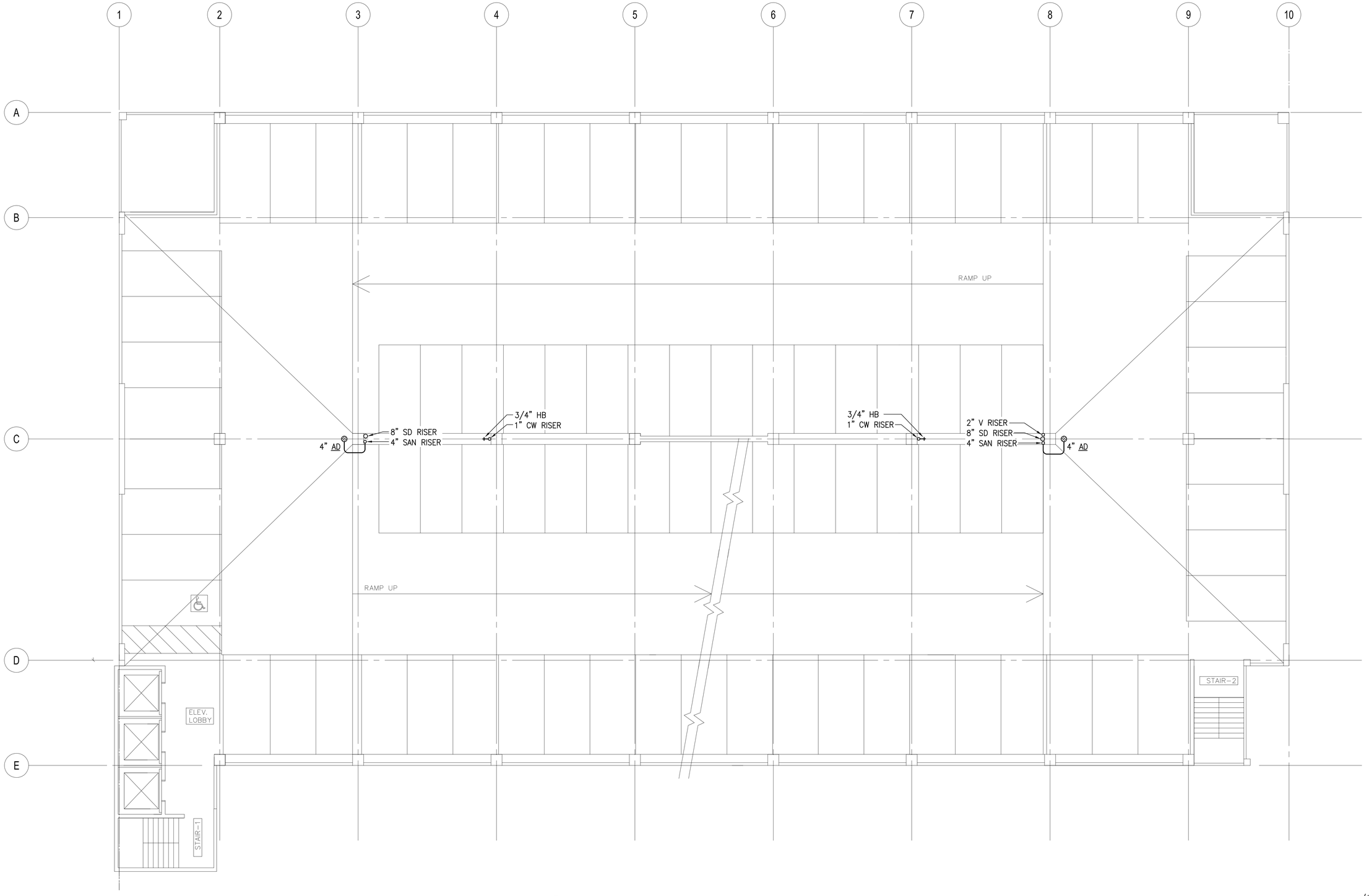

1 / P1.6 **GARAGE - TYPICAL PLUMBING PLAN**
SCALE: 1/8" = 1'-0" LEVELS 2 – 9

0 8' 16' 24'
SCALE: 1/8"=1'-0"

NORTH

NO.	DATE	REVISIONS

ROSS S. OKUDA
LICENSED PROFESSIONAL ENGINEER
No. 9377-M
HAWAII, U.S.A.
Expiration Date: 4/30/2014

THIS PROJECT WAS PREPARED BY ME OR UNDER MY SUPERVISION AND CONSTRUCTION OF THIS PROJECT WILL BE UNDER MY SUPERVISION.

KAKAAKO WORKFORCE HOUSING PER SUBCHAPTER 4 OF 2011 MAUKA PLAN AND RULES
801 SOUTH STREET
HONOLULU, HAWAII

GARAGE - TYPICAL PLUMBING PLAN, LEVELS 2 - 9

KAZU YATO, AIA & ASSOCIATES, INC.
2023 ROOSEVELT TERRACE
HONOLULU, HI 96822
TEL: (808) 945-2040
FAX: (808) 945-2041

DATE	DRAWN	CHECK	FILE
DATE	MEI	RSO	

SHEET

P1.6

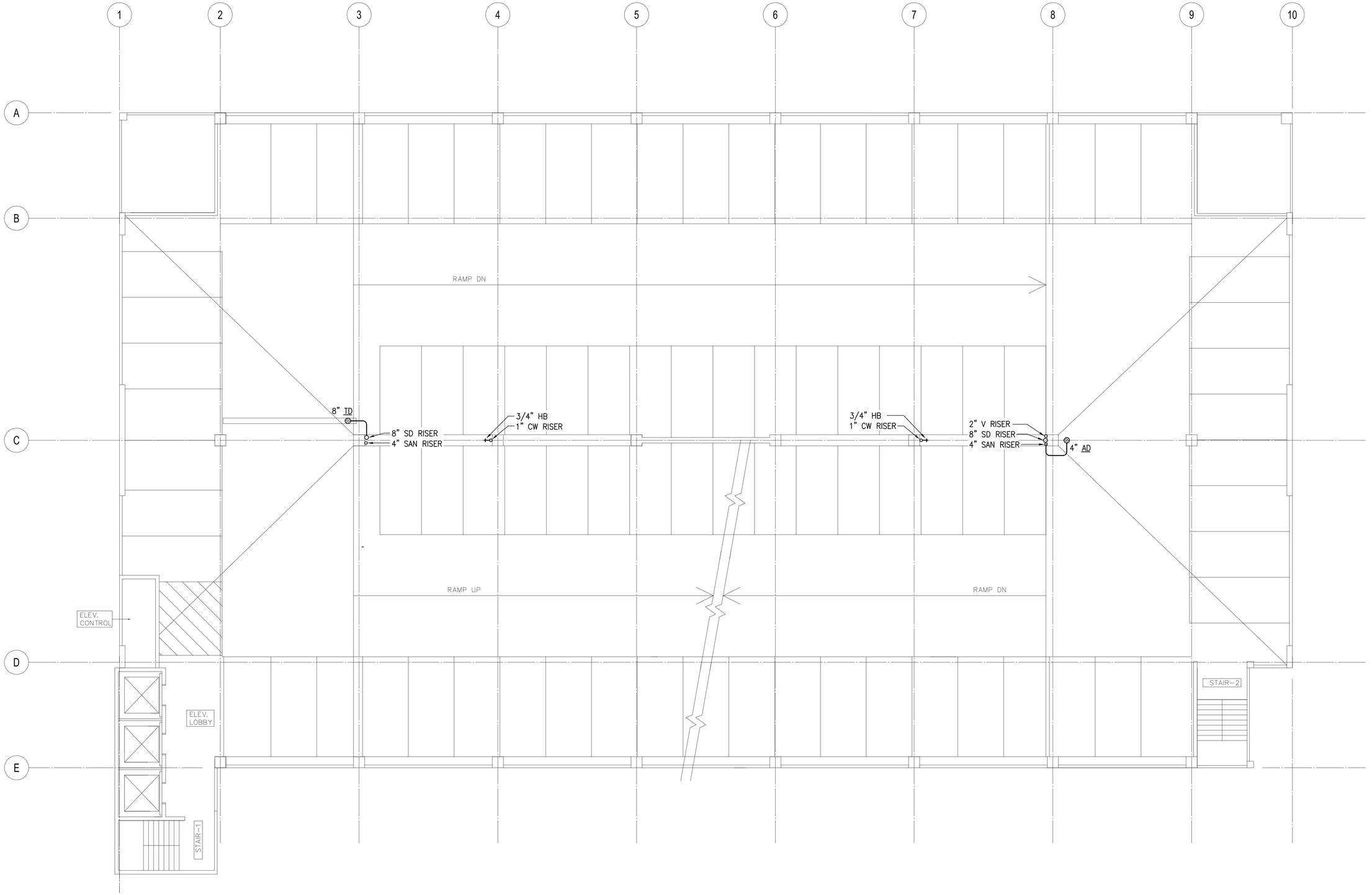

1 / P1.7 **GARAGE - LEVEL 10 PLUMBING PLAN**
SCALE: 1/8" = 1'-0"

0 8' 16' 24'
SCALE: 1/8"=1'-0"

NORTH

REVISIONS

NO.	DATE

ROSS S. OKUDA
LICENSED PROFESSIONAL ENGINEER
No. 9377-M
HAWAII, U.S.A.
Expiration Date: 4/30/2014

THIS PROJECT WAS PREPARED BY ME OR UNDER MY SUPERVISION AND CONSTRUCTION OF THIS PROJECT WILL BE UNDER MY SUPERVISION.

KAKAAKO WORKFORCE HOUSING
SUBCHAPTER 4 OF 2011 MAUKA PLAN AND RULES
801 SOUTH STREET
HONOLULU, HAWAII

GARAGE - LEVEL 10 PLUMBING PLAN

KAZU YATO, AIA & ASSOCIATES,INC.
2222 KALAKAUA AVENUE
HONOLULU, HI 96822
TEL: (808) 945-0049
FAX: (808) 945-0041

DATE	DRAWN	CHECK	FILE
DATE	MEI	KOU	

SHEET

P1.7

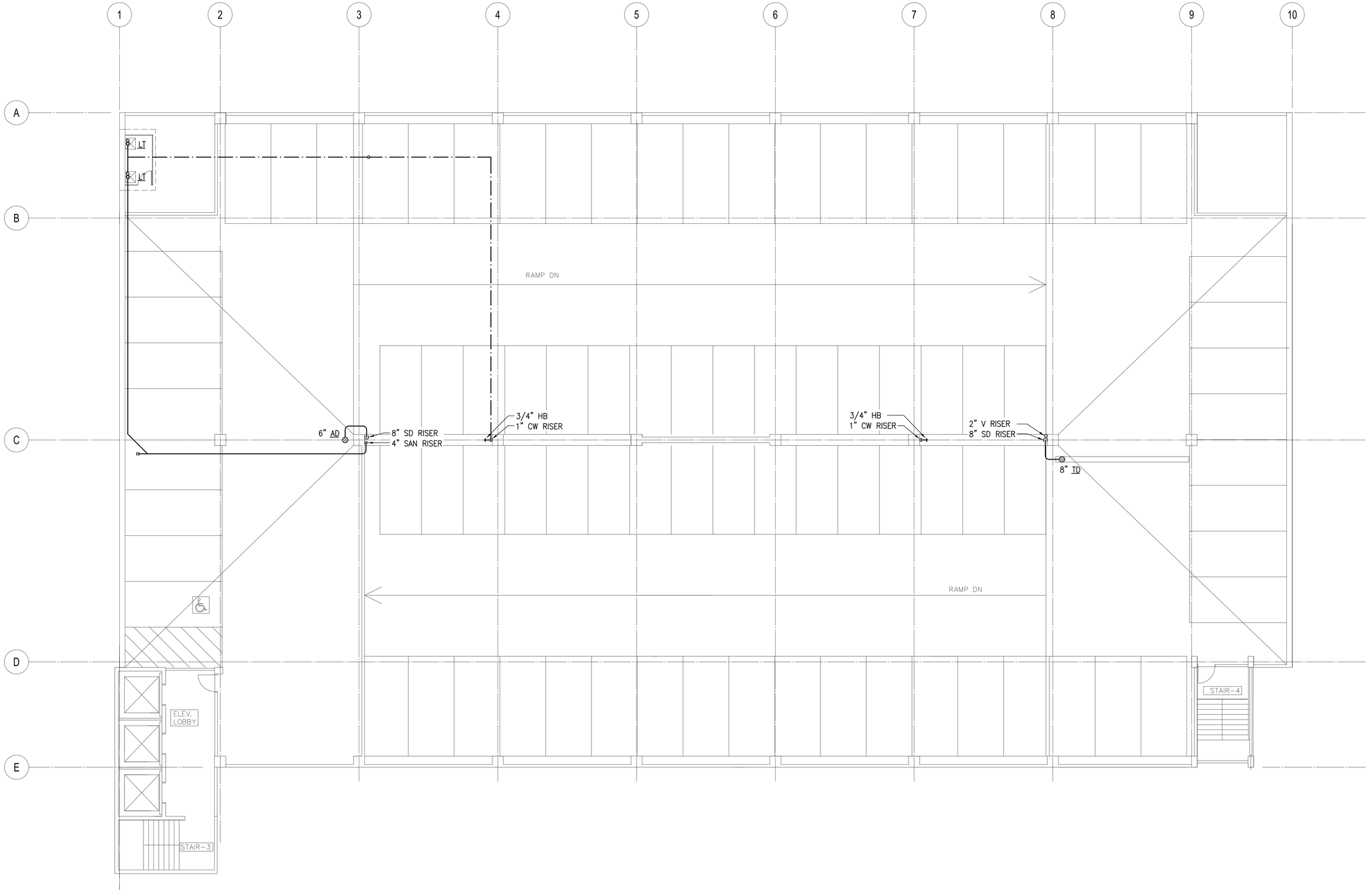

1 / P1.7 **GARAGE - LEVEL 11 PLUMBING PLAN**
SCALE: 1/8" = 1'-0"

0 8' 16' 24'
SCALE: 1/8"=1'-0"

NORTH

NO.	DATE	REVISIONS

ROSS S. OKUDA
LICENSED PROFESSIONAL ENGINEER
No. 9377-M
HAWAII, U.S.A.
Expiration Date: 4/30/2014

THIS PROJECT WAS PREPARED BY ME OR UNDER MY SUPERVISION AND CONSTRUCTION OF THIS PROJECT WILL BE UNDER MY SUPERVISION.

KAKAAKO WORKFORCE HOUSING
SUBCHAPTER 4 OF 2011 MAUKA PLAN AND RULES
801 SOUTH STREET
HONOLULU, HAWAII

GARAGE - LEVEL 11 PLUMBING PLAN

KAZU YATO, AIA & ASSOCIATES, INC.
2233 ROOSEVELT TERRACE
HONOLULU, HI 96822
TEL: (808) 945-0949
FAX: (808) 945-0941

DATE	DATE	MEI	CHECK KSO	FILE
	DRAWN			

SHEET

P1.8

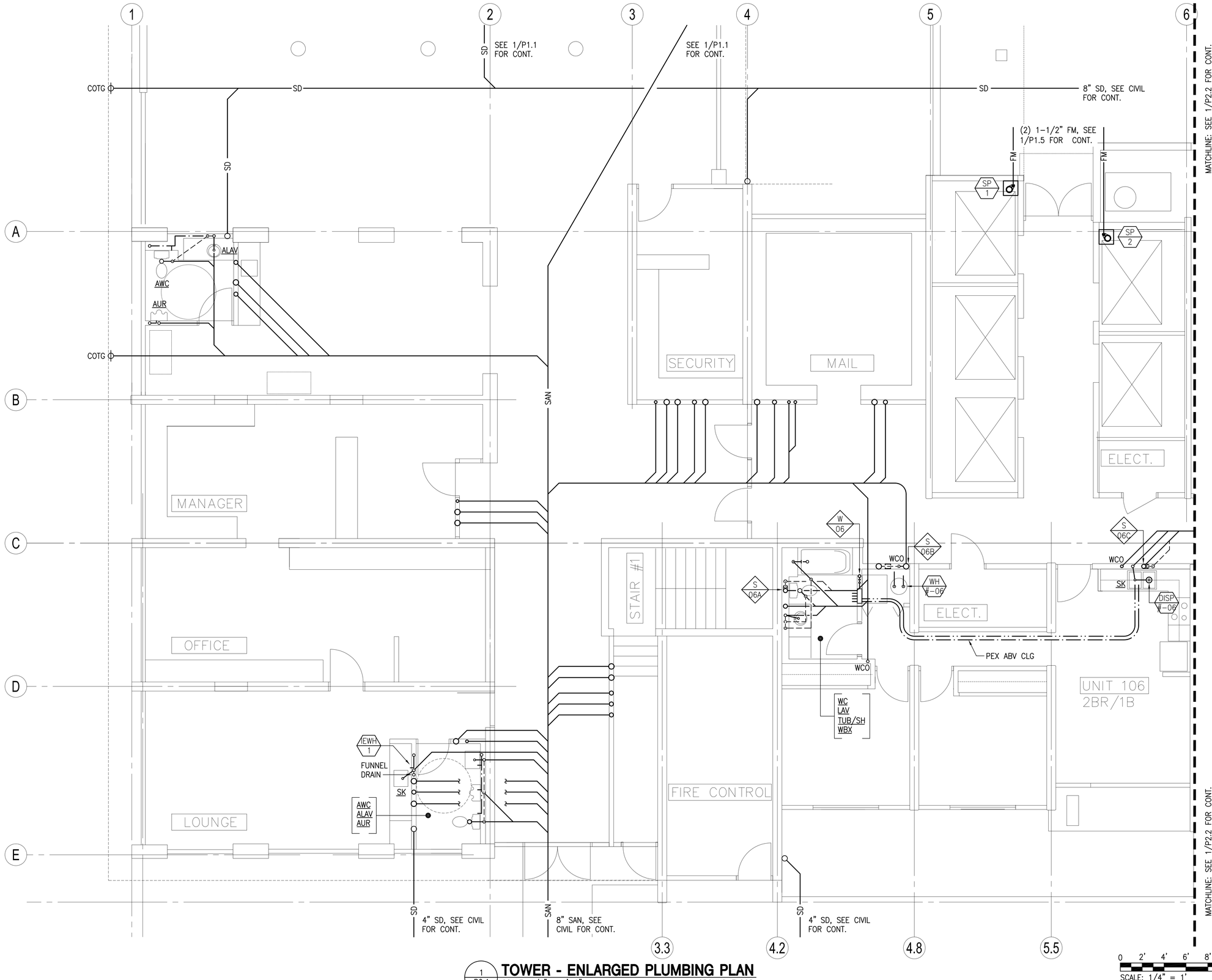

1 P2.1 **TOWER - ENLARGED PLUMBING PLAN**
SCALE: 1/4" = 1'-0" GROUND FLOOR

REVISIONS

NO.	DATE

ROSS S. OKUDA LICENSED PROFESSIONAL ENGINEER No. 9377-M HAWAII, U.S.A.
Expiration Date: 4/30/2014

THIS PROJECT WAS PREPARED BY ME OR UNDER MY SUPERVISION AND CONSTRUCTION OF THIS PROJECT WILL BE UNDER MY SUPERVISION.

KAKAAKO WORKFORCE HOUSING PER
SUBCHAPTER 4 OF 2011 MAUKA PLAN AND RULES
801 SOUTH STREET
HONOLULU, HAWAII

TOWER - ENLARGED PLUMBING PLAN, GROUND FLOOR

KAZU YATO, AIA & ASSOCIATES, INC.
2033 ROUNDTOP TERRACE
HONOLULU, HI 96822
TEL: (808) 945-0040
FAX: (808) 945-0041

DATE	DATE	DRAWN	MEI	CHECK	RSD	FILE

SHEET

P2.1

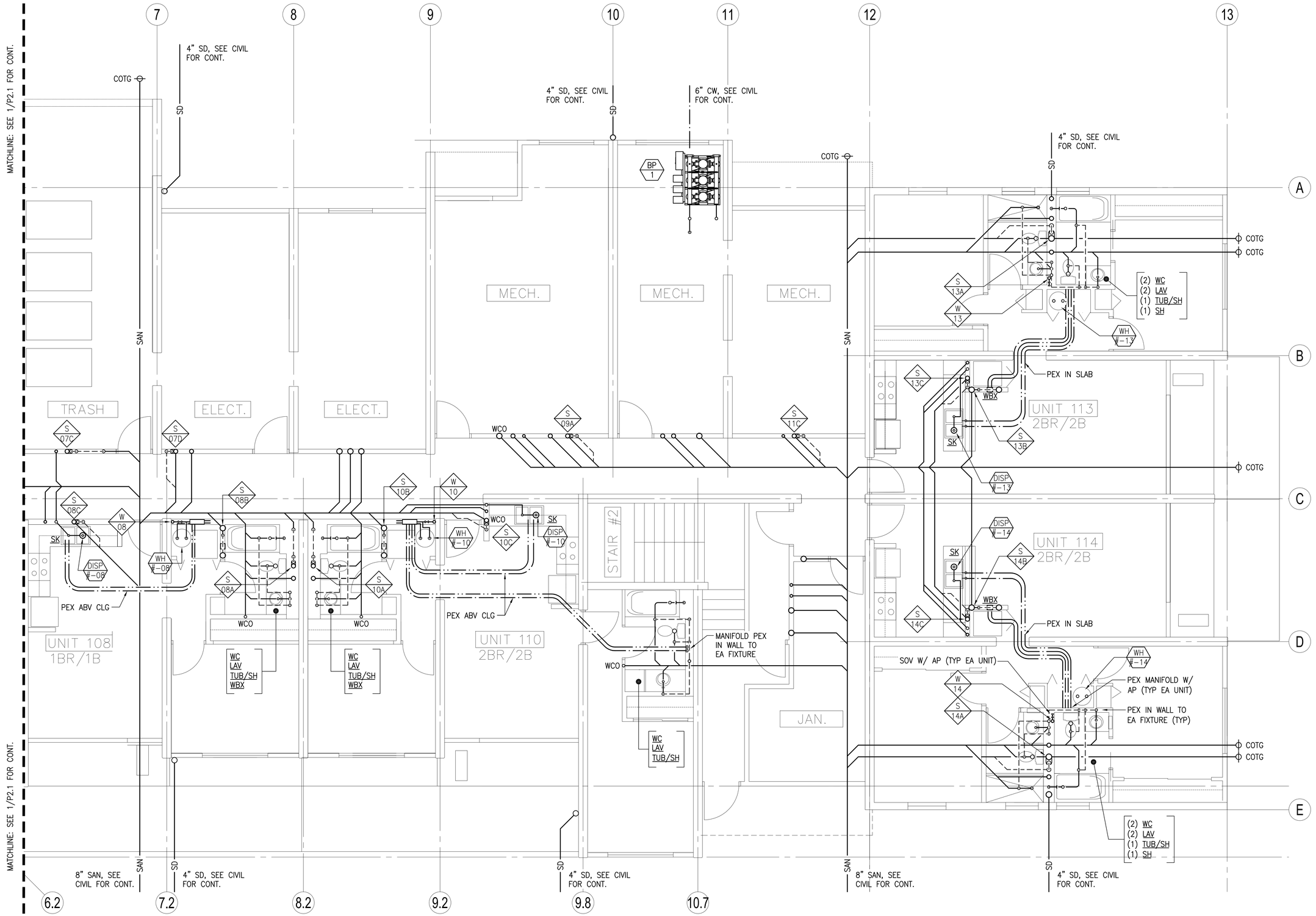

1 P2.2 **TOWER - ENLARGED PLUMBING PLAN** GROUND FLOOR
SCALE: 1/4" = 1'-0"

0 2' 4' 6' 8' 10' 12'
SCALE: 1/4" = 1'

NORTH

REVISIONS

NO.	DATE

ROSS S. OKUDA LICENSED PROFESSIONAL ENGINEER No. 9377-M HAWAII, U.S.A.

Expiration Date: 4/30/2014

THIS PROJECT WAS PREPARED BY ME OR UNDER MY SUPERVISION AND CONSTRUCTION OF THIS PROJECT WILL BE UNDER MY SUPERVISION.

KAKAAKO WORKFORCE HOUSING PER SUBCHAPTER 4 OF 2011 MAUKA PLAN AND RULES

801 SOUTH STREET
HONOLULU, HAWAII

TOWER - ENLARGED PLUMBING PLAN, GROUND FLOOR

KAZU YATO, AIA & ASSOCIATES, INC.
2222 KALAKAUA AVENUE
HONOLULU, HI 96822
TEL: (808) 945-0049
FAX: (808) 945-0041

DATE	DATE
DRAWN	MEI
CHECK	RSO
FILE	

SHEET

P2.2

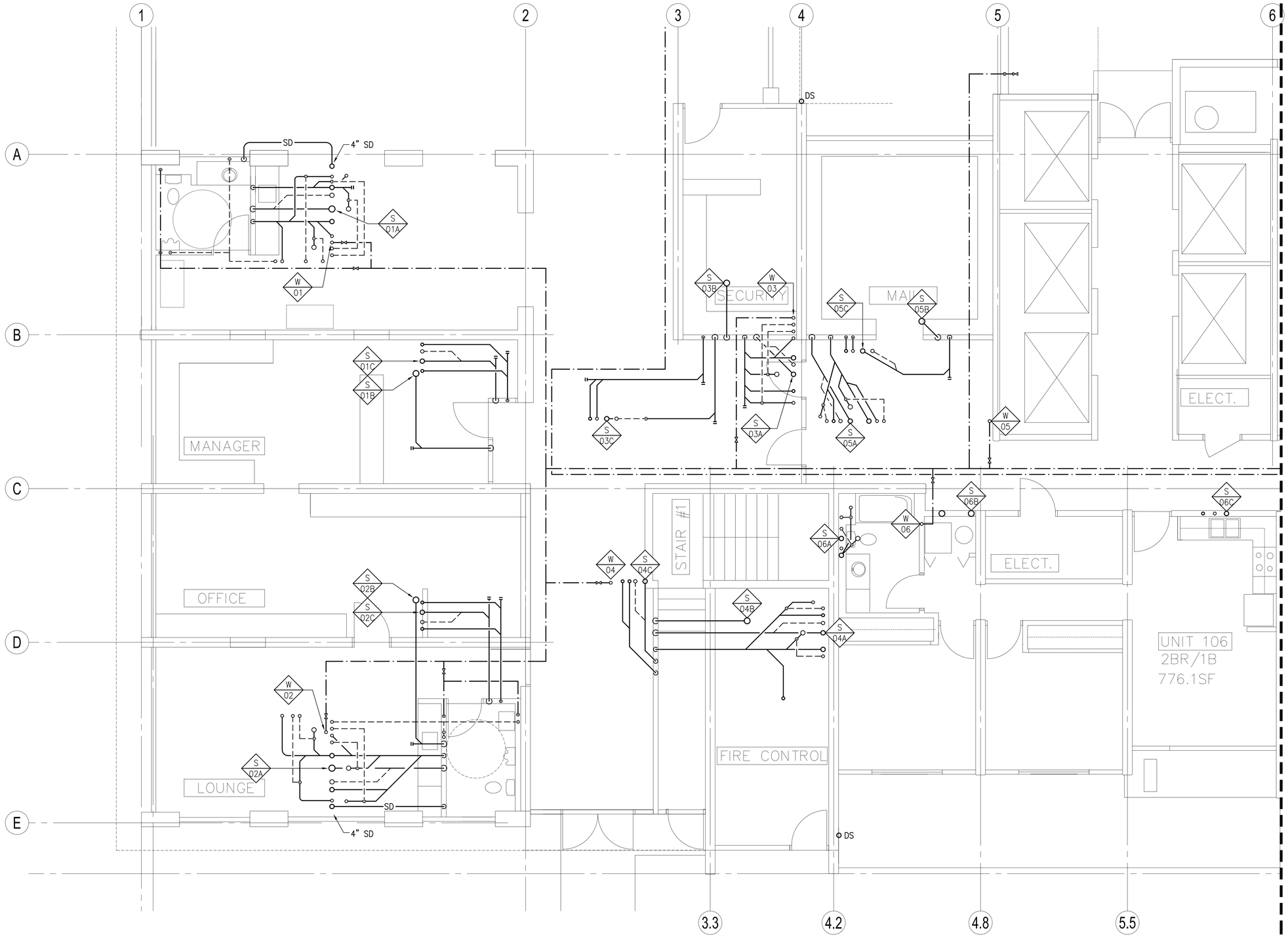

1 P2.3 **TOWER - ENLARGED PLUMBING PLAN**
SCALE: 1/4" = 1'-0" GROUND FLOOR

0 2' 4' 6' 8' 10' 12'
SCALE: 1/4" = 1'

NORTH

REVISIONS

NO.	DATE

ROSS S. OKUDA
LICENSED PROFESSIONAL ENGINEER
No. 9377-M
HAWAII, U.S.A.
Expiration Date: 4/30/2014

THIS PROJECT WAS PREPARED BY ME OR UNDER MY SUPERVISION AND CONSTRUCTION OF THIS PROJECT WILL BE UNDER MY SUPERVISION.

KAKAAKO WORKFORCE HOUSING PER
SUBCHAPTER 4 OF 2011 MAUKA PLAN AND RULES

801 SOUTH STREET
HONOLULU, HAWAII

TOWER - ENLARGED PLUMBING PLAN, GROUND FLOOR

KAZU YATO, AIA & ASSOCIATES,INC.
2222 KALAKAUA AVENUE
HONOLULU, HI 96822
TEL: (808) 945-0049
FAX: (808) 945-0041

DATE	DATE	WEI	RSO	FILE
	DRAWN	CHECK		

SHEET

P2.3

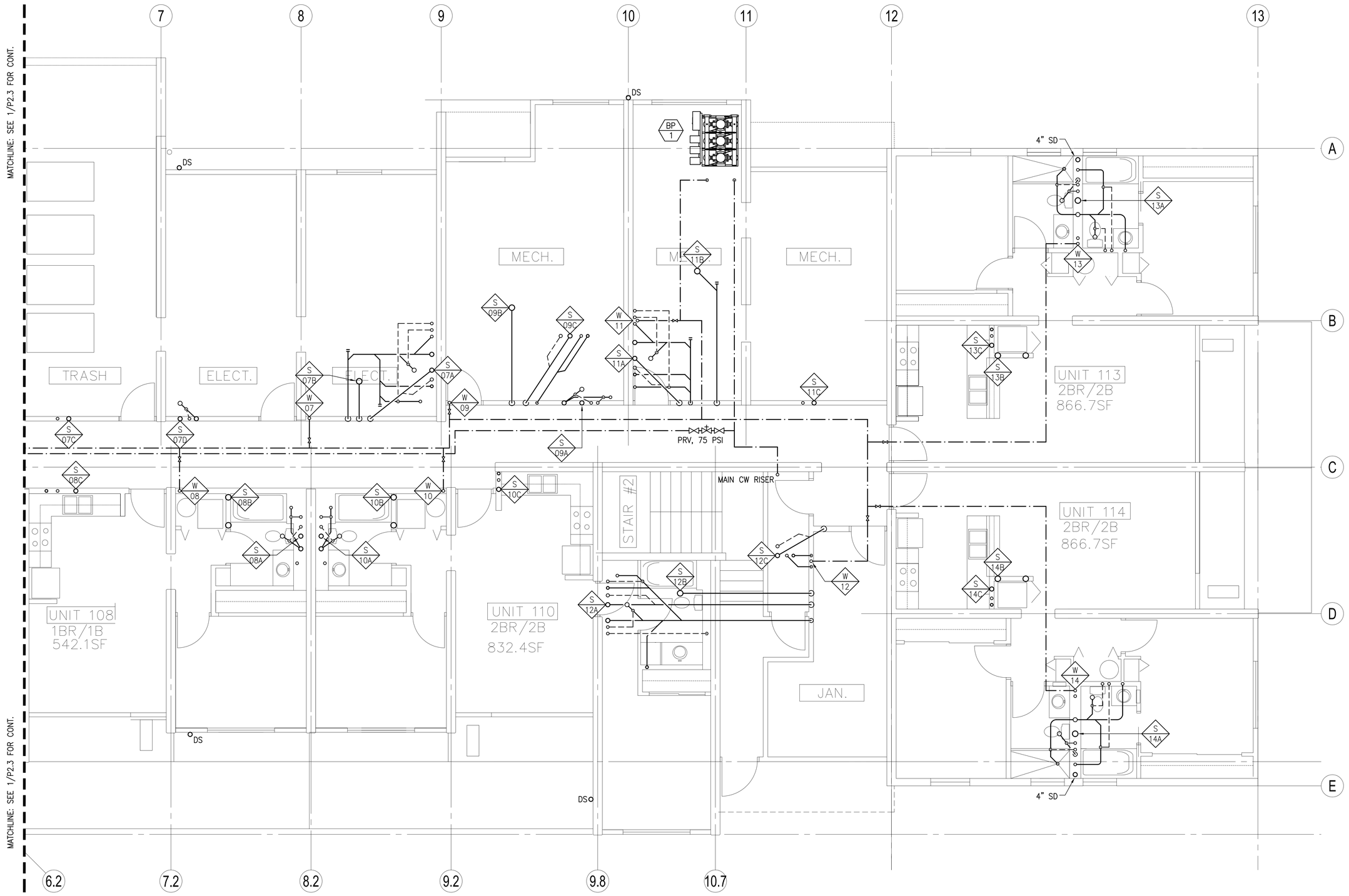

1 P2.4 **TOWER - ENLARGED PLUMBING PLAN** GROUND FLOOR
SCALE: 1/4" = 1'-0"

0 2' 4' 6' 8' 10' 12'
SCALE: 1/4" = 1'

NORTH

NO.	DATE	REVISIONS

ROSS S. OKUDA LICENSED PROFESSIONAL ENGINEER No. 9377-M HAWAII, U.S.A.
Expiration Date: 4/30/2014

THIS PROJECT WAS PREPARED BY ME OR UNDER MY SUPERVISION AND CONSTRUCTION OF THIS PROJECT WILL BE UNDER MY SUPERVISION.

KAKAAKO WORKFORCE HOUSING PER
SUBCHAPTER 4 OF 2011 MAUKA PLAN AND RULES
801 SOUTH STREET
HONOLULU, HAWAII

TOWER - ENLARGED PLUMBING PLAN, GROUND FLOOR

KAZU YATO, AIA & ASSOCIATES, INC.
2222 ROOSEVELT TERRACE
HONOLULU, HI 96822
TEL: (808) 945-2040
FAX: (808) 945-2041

DATE	DATE	MEI	RSO	FILE
		DRAWN	CHECK	

SHEET

P2.4

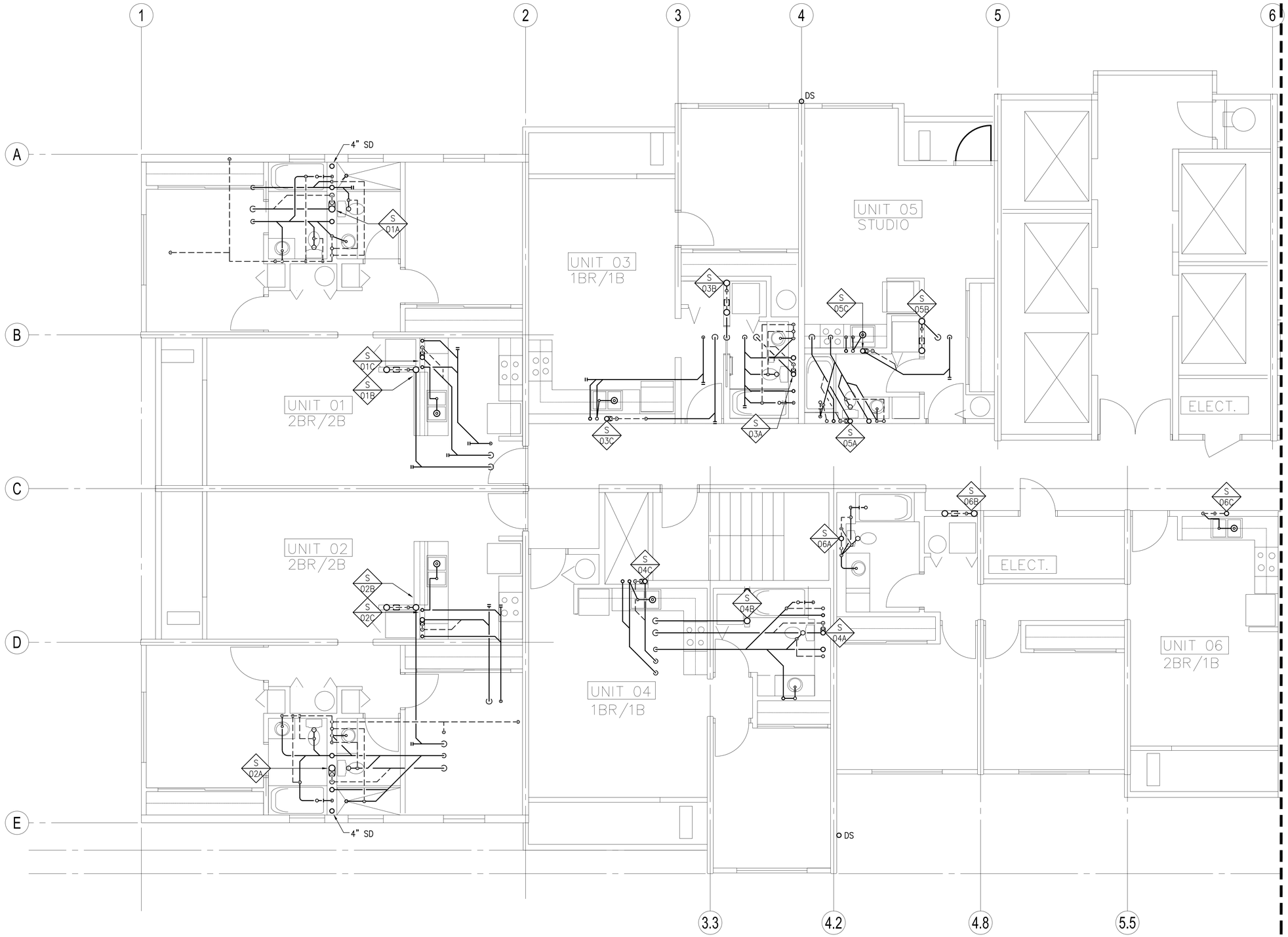

1 / P2.5 **TOWER - TYPICAL ENLARGED PLUMBING PLAN**
SCALE: 1/4" = 1'-0" 2ND FLR

NOTE:
WATER PIPING OMITTED FROM DRAWING FOR CLARITY. SEE 1/P2.9 FOR TYPICAL UNIT WATER PIPING.

0 2' 4' 6' 8' 10' 12'
SCALE: 1/4" = 1'

NORTH

REVISIONS

NO.	DATE

ROSS S. OKUDA
LICENSED PROFESSIONAL ENGINEER
No. 9377-M
HAWAII, U.S.A.
Expiration Date: 4/30/2014

THIS PROJECT WAS PREPARED BY ME OR UNDER MY SUPERVISION AND CONSTRUCTION OF THIS PROJECT WILL BE UNDER MY SUPERVISION.

KAKAAKO WORKFORCE HOUSING PER SUBCHAPTER 4 OF 2011 MAUKA PLAN AND RULES
801 SOUTH STREET
HONOLULU, HAWAII
TOWER - TYPICAL ENLARGED PLUMBING PLAN, 2ND FLOOR

KAZU YATO, AIA & ASSOCIATES, INC.
2222 KALAKAUA AVENUE
HONOLULU, HI 96822
TEL: (808) 945-0049
FAX: (808) 945-0041

DATE	DATE	MEI	RSO	FILE
	DRAWN	CHECK		

SHEET
P2.5

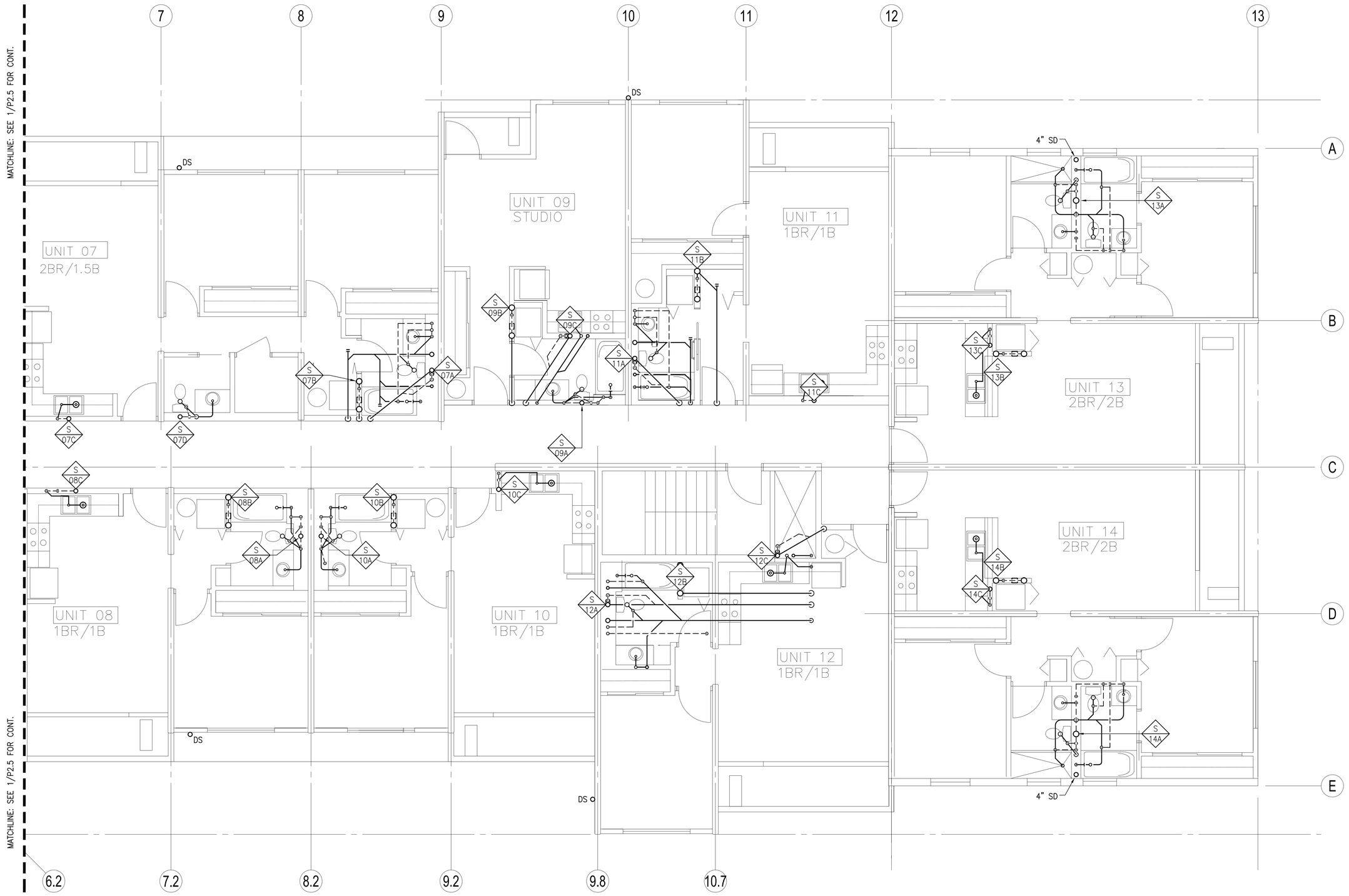

1 / P2.6 **TOWER - TYPICAL ENLARGED PLUMBING PLAN** 2ND FLR
SCALE: 1/4" = 1'-0"

NOTE:
WATER PIPING OMITTED FROM DRAWING FOR CLARITY. SEE 1/P2.10 FOR TYPICAL UNIT WATER PIPING.

0 2' 4' 6' 8' 10' 12'
SCALE: 1/4" = 1'

NORTH

NO.	DATE	REVISIONS

ROSS S. OKUDA
LICENSED PROFESSIONAL ENGINEER
No. 9377-M
HAWAII, U.S.A.
Expiration Date: 4/30/2014

THIS PROJECT WAS PREPARED BY ME OR UNDER MY SUPERVISION AND CONSTRUCTION OF THIS PROJECT WILL BE UNDER MY SUPERVISION.

KAZU YATO, AIA & ASSOCIATES, INC.
2222 ROUND TOP TERRACE
HONOLULU, HI 96822
TEL: (808) 945-0040
FAX: (808) 945-0041

DATE
DATE
DRAWN MEI
CHECK RSO
FILE

SHEET
P2.6

KAKAAKO WORKFORCE HOUSING PER SUBCHAPTER 4 OF 2011 MAUKA PLAN AND RULES
801 SOUTH STREET
HONOLULU, HAWAII

TOWER - TYPICAL ENLARGED PLUMBING PLAN, 2ND FLOOR

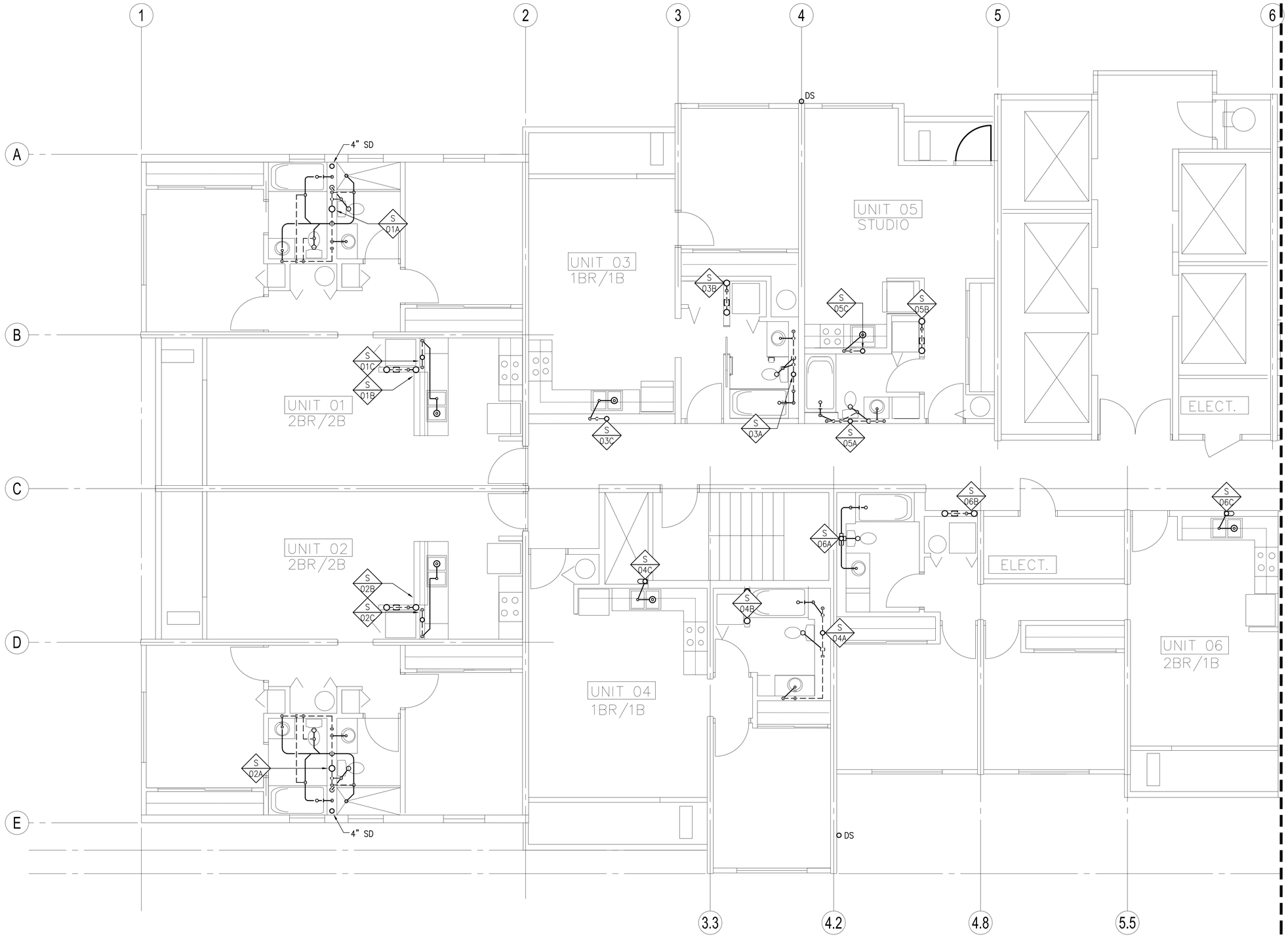

1 / P2.7 **TOWER - TYPICAL ENLARGED PLUMBING PLAN**
SCALE: 1/4" = 1'-0" 3RD FLR

NOTE:
WATER PIPING OMITTED FROM DRAWING FOR CLARITY. SEE 1/P2.9 FOR TYPICAL UNIT WATER PIPING.

SCALE: 1/4" = 1'

NORTH

REVISIONS

NO.	DATE

THIS PROJECT WAS PREPARED BY ME OR UNDER MY SUPERVISION AND CONSTRUCTION OF THIS PROJECT WILL BE UNDER MY SUPERVISION.

ROSS S. OKUDA
LICENSED PROFESSIONAL ENGINEER
No. 9377-M
HAWAII, U.S.A.

Expiration Date: 4/30/2014

KAKAAKO WORKFORCE HOUSING PER
SUBCHAPTER 4 OF 2011 MAUKA PLAN AND RULES

801 SOUTH STREET
HONOLULU, HAWAII

TOWER - TYPICAL ENLARGED PLUMBING PLAN, 3RD FLOOR

KAZU YATO, AIA & ASSOCIATES, INC.
2222 KALAKAUA AVENUE
HONOLULU, HI 96822
TEL: (808) 945-2040
FAX: (808) 945-2041

DATE	DATE	WEI	RSO	FILE
	DRAWN	CHECK		

SHEET

P2.7

MATCHLINE: SEE 1/P2.7 FOR CONT.

7 8 9 10 11 12 13

A B C D E

UNIT 07
2BR/1.5B

UNIT 08
1BR/1B

UNIT 09
STUDIO

UNIT 10
1BR/1B

UNIT 11
1BR/1B

UNIT 12
1BR/1B

UNIT 13
2BR/2B

UNIT 14
2BR/2B

DS

4" SD

S 07A, S 07B, S 07C, S 07D
S 08A, S 08B, S 08C
S 09A, S 09B, S 09C
S 10A, S 10B, S 10C
S 11A, S 11B, S 11C
S 12A, S 12B, S 12C
S 13A, S 13B, S 13C
S 14A, S 14B, S 14C

MATCHLINE: SEE 1/P2.7 FOR CONT.

6.2 7.2 8.2 9.2 9.8 10.7

1 / P2.8 **TOWER - TYPICAL ENLARGED PLUMBING PLAN**
SCALE: 1/4" = 1'-0" 3RD FLR

NOTE:
WATER PIPING OMITTED FROM DRAWING FOR CLARITY. SEE 1/P2.10 FOR TYPICAL UNIT WATER PIPING.

0 2' 4' 6' 8' 10' 12'
SCALE: 1/4" = 1'

NORTH

NO.	DATE	REVISIONS

ROSS S. OKUDA
LICENSED PROFESSIONAL ENGINEER
No. 9377-M
HAWAII, U.S.A.
Expiration Date: 4/30/2014

THIS PROJECT WAS PREPARED BY ME OR UNDER MY SUPERVISION AND CONSTRUCTION OF THIS PROJECT WILL BE UNDER MY SUPERVISION.

KAKAAKO WORKFORCE HOUSING PER SUBCHAPTER 4 OF 2011 MAUKA PLAN AND RULES
801 SOUTH STREET
HONOLULU, HAWAII

TOWER - TYPICAL ENLARGED PLUMBING PLAN, 3RD FLOOR

KAZU YATO, AIA & ASSOCIATES, INC.
2222 KALAKAUA AVENUE
HONOLULU, HI 96822
TEL: (808) 945-0040
FAX: (808) 945-0041

DATE	DRAWN	CHECK	FILE
DATE	MEI	RSO	

SHEET
P2.8

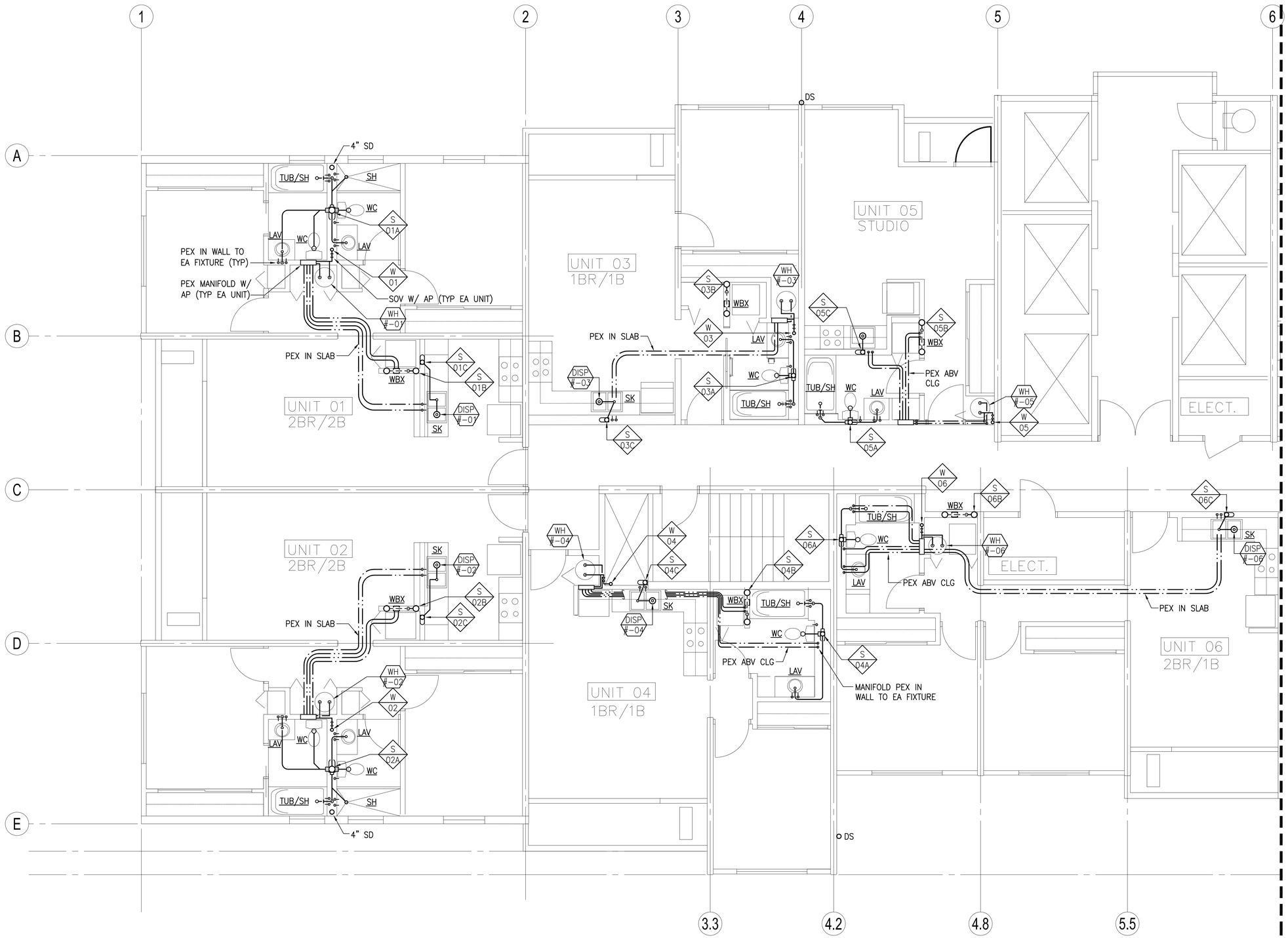

1 / P2.9 **TOWER - TYPICAL ENLARGED PLUMBING PLAN**
SCALE: 1/4" = 1'-0" 4TH – 45TH FLR

0 2' 4' 6' 8' 10' 12'
SCALE: 1/4" = 1'

NORTH

REVISIONS

NO.	DATE

THIS PROJECT WAS PREPARED BY ME OR UNDER MY SUPERVISION AND CONSTRUCTION OF THIS PROJECT WILL BE UNDER MY SUPERVISION.

ROSS S. OKUDA
LICENSED PROFESSIONAL ENGINEER
No. 9377-M
HAWAII, U.S.A.
Expiration Date: 4/30/2014

KAKAAKO WORKFORCE HOUSING PER SUBCHAPTER 4 OF 2011 MAUKA PLAN AND RULES
801 SOUTH STREET
HONOLULU, HAWAII

TOWER - TYPICAL ENLARGED PLUMBING PLAN, 4TH - 46TH FLOOR

KAZU YATO, AIA & ASSOCIATES, INC.
2222 KALAKAUA AVENUE
HONOLULU, HI 96822
TEL: (808) 945-0049
FAX: (808) 945-0041

DATE	DRAWN	CHECK	FILE
DATE	MEI	RSO	

SHEET

P2.9

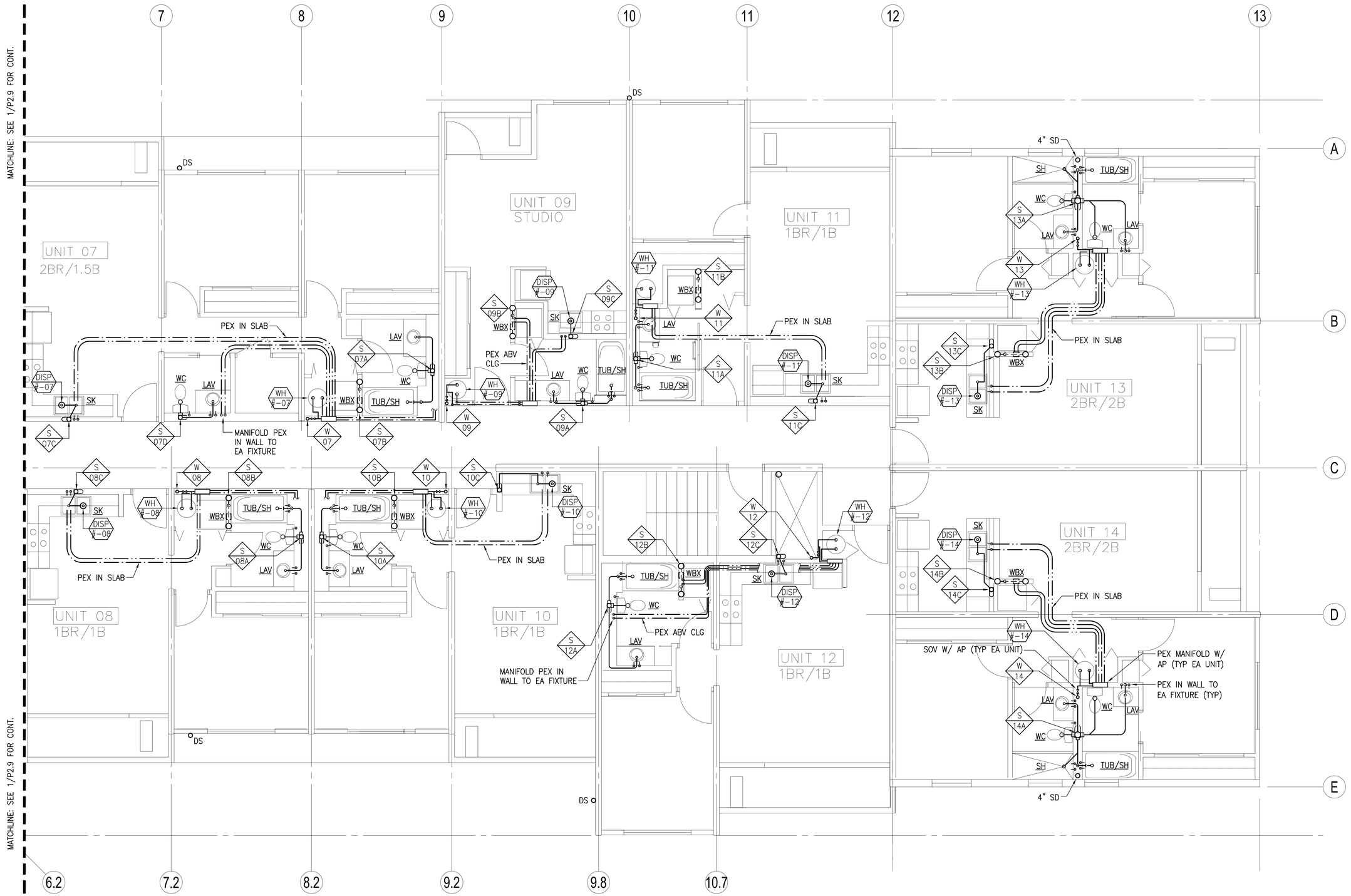

1 P2.10 **TOWER - TYPICAL ENLARGED PLUMBING PLAN**
SCALE: 1/4" = 1'-0" 4TH – 45TH FLR

0 2' 4' 6' 8' 10' 12'
SCALE: 1/4" = 1'

NORTH

NO.	DATE	REVISIONS

ROSS S. OKUDA
LICENSED PROFESSIONAL ENGINEER
No. 9377-M
HAWAII, U.S.A.
Expiration Date: 4/30/2014

THIS PROJECT WAS PREPARED BY ME OR UNDER MY SUPERVISION AND CONSTRUCTION OF THIS PROJECT WILL BE UNDER MY SUPERVISION.

KAKAAKO WORKFORCE HOUSING PER SUBCHAPTER 4 OF 2011 MAUKA PLAN AND RULES
801 SOUTH STREET
HONOLULU, HAWAII

TOWER - TYPICAL ENLARGED PLUMBING PLAN, 4TH - 46TH FLOOR

KAZU YATO, AIA & ASSOCIATES, INC.
2222 ROOSEVELT TERRACE
HONOLULU, HI 96822
TEL: (808) 945-2040
FAX: (808) 945-2041

DATE	DRAWN	CHECK	FILE
DATE	MEI	RSO	

SHEET
P2.10

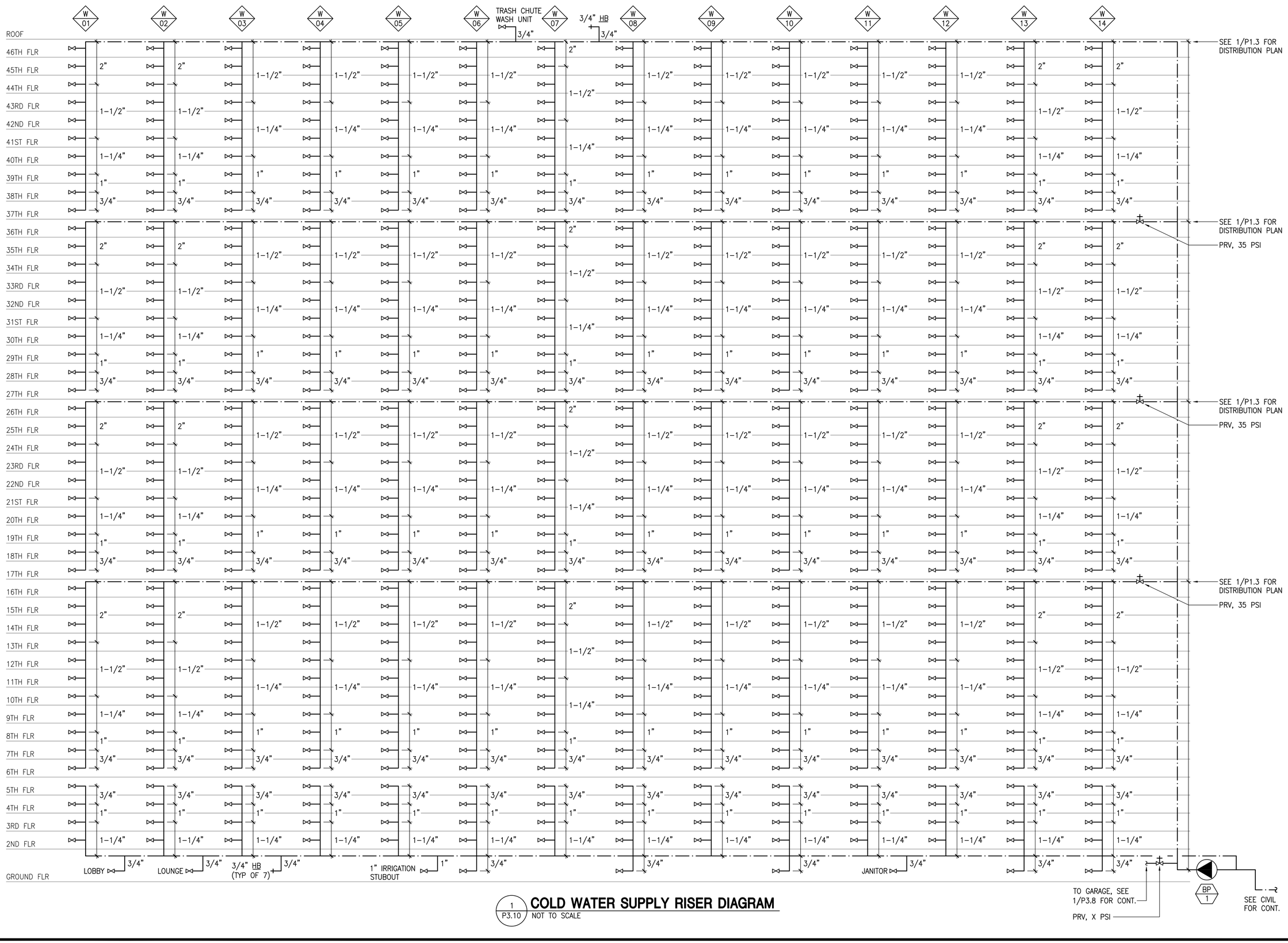

1 / P3.10 **COLD WATER SUPPLY RISER DIAGRAM**
NOT TO SCALE

NO.	DATE	REVISIONS

ROSS S. OKUDA
LICENSED PROFESSIONAL ENGINEER
No. 9377-A
HAWAII, U.S.A.
Expiration Date: 4/30/2014

THIS PROJECT WAS PREPARED BY ME OR UNDER MY SUPERVISION AND CONSTRUCTION OF THIS PROJECT WILL BE UNDER MY SUPERVISION.

KAKAAKO WORKFORCE HOUSING PER
SUBCHAPTER 4 OF 2011 MAUKA PLAN AND RULES
801 SOUTH STREET
HONOLULU, HAWAII
COLD WATER RISER DIAGRAMS

KAZU YATO, AIA & ASSOCIATES,INC.
2222 KALAKAUA AVENUE
HONOLULU, HI 96822
TEL: (808) 945-0049
FAX: (808) 945-0041

DATE	DATE	DRAWN	MEI	CHECK	RSO	FILE

SHEET
P3.10

DOMESTIC BOOSTER PUMP SCHEDULE

UNIT NO.	MANUFACTURER AND MODEL OR APPROVED EQUAL	SERVICE	TYPE	HEADER		PUMPS 1, 2, & 3 (TYP)					ELECTRICAL			OPR WT (LBS)	REMARKS
				SUCT	DISCH	MFR AND MODEL	GPM	TDH	RPM	HP	V	ø	Hz		
BP 1	TIGERFLOW TVMV-40GF-C-S6-VFD	DOMESTIC BOOSTER	PACKAGED TRIPLEX BOOSTER	6"	6"	GRUNDFOS CR64-4-2	250	420	3,600	40	460	3	60	2,800	PACKAGED SKID MOUNTED TRIPLEX BOOSTER ASSEMBLY COMPLETE WITH VALVES, STAINLESS STEEL SUCTION & DISCHARGE HEADER, 1-PT POWER CONN, VARIABLE FREQUENCY DRIVES, AND CONTROL PANEL

WATER HEATER SCHEDULE

UNIT NO.	MANUFACTURER AND MODEL OR APPROVED EQUAL	AREA SERVED	QTY	STORAGE CAPACITY (GAL)	RECOVERY @ 80°F RISE (GPH)	ELECTRICAL				HEIGHT (IN)	DIAMETER (IN)	OPR WT (LBS)	REMARKS
						V	ø	Hz	kW				
EWH #-X	BRADFORD WHITE M-2-50T6DS	TYP 2-BATH UNITS	183	50	29	208	3	60	5.5	57-1/2	20	533	PROVIDE WATER HEATER COMPLETE WITH HEAT TRAPS, SHUTOFF VALVES, VACUUM BREAKER, T&P VALVE, AND PVC DRAIN PAN
EWH #-X	BRADFORD WHITE M-2-40S6DS	TYP 1.5-BATH UNITS	45	40	29	208	3	60	5.5	46-7/8	20	431	PROVIDE WATER HEATER COMPLETE WITH HEAT TRAPS, SHUTOFF VALVES, VACUUM BREAKER, T&P VALVE, AND PVC DRAIN PAN
EWH #-X	BRADFORD WHITE M-2-30R6DS	TYP 1-BATH UNITS	407	30	29	208	3	60	5.5	46-7/8	18	331	PROVIDE WATER HEATER COMPLETE WITH HEAT TRAPS, SHUTOFF VALVES, VACUUM BREAKER, T&P VALVE, AND PVC DRAIN PAN

UNIT LEGEND: # = FLOOR DESIGNATION (1-46)
X = UNIT DESIGNATION (01-14)

FOOD WASTE DISPOSER SCHEDULE

UNIT NO.	MANUFACTURER AND MODEL OR APPROVED EQUAL	LOCATION	QTY	RPM	ELECTRICAL					OPR WT (LBS)	REMARKS
					V	ø	Hz	HP	A		
DISP #-X	INSINKERATOR BADGER 5	TYP UNIT KITCHEN	635	1725	120	1	60	0.5	6.9	14	PROVIDE WALL MOUNTED ON-OFF SWITCH

UNIT LEGEND: # = FLOOR DESIGNATION (1-46)
X = UNIT DESIGNATION (01-14)

INSTANTANEOUS WATER HEATER SCHEDULE

UNIT NO.	MANUFACTURER AND MODEL OR APPROVED EQUAL	AREA SERVED	TEMP RISE @ 1.0 GPM	ELECTRICAL					OPR WT (LBS)	REMARKS
				V	ø	Hz	kW	A		
EWH 1	EEMAX SP8208	LOUNGE	57°	208	1	60	8.3	40	4	MOUNT BELOW SINK IN CABINET
EWH 2	EEMAX SP8208	RECREATION	57°	208	1	60	8.3	40	4	MOUNT BELOW SINK IN CABINET

SUMP PUMP SCHEDULE

UNIT NO.	MANUFACTURER AND MODEL OR APPROVED EQUAL	AREA SERVED	GPM	TDH	RPM	ELECTRICAL				REMARKS
						V	ø	Hz	HP	
SP 1	HYDROMATIC W-A1	TOWER ELEVATOR PIT	30	15	1550	115	1	60	1/3	PACKAGED SUBMERSIBLE SUMP PUMP WITH CORD AND FLOAT SWITCH
SP 2	HYDROMATIC W-A1	TOWER ELEVATOR PIT	30	15	1550	115	1	60	1/3	PACKAGED SUBMERSIBLE SUMP PUMP WITH CORD AND FLOAT SWITCH
SP 3	HYDROMATIC W-A1	GARAGE ELEVATOR PIT	30	15	1550	115	1	60	1/3	PACKAGED SUBMERSIBLE SUMP PUMP WITH CORD AND FLOAT SWITCH

OIL INTERCEPTOR SCHEDULE

UNIT NO.	MANUFACTURER AND MODEL OR APPROVED EQUAL	AREA SERVED	CAPACITY (GAL)	INLET/OUTLET SIZE	DIMENSIONS			REMARKS
					L	W	H	
OI 1	JENSEN PRECAST HJ500SO	GARAGE	500	4"	7'-5"	4'-11"	5'-0"	PROVIDE MANHOLE EXTENSIONS AS REQUIRED TO LEVEL WITH FINISH GRADE

FUEL STORAGE TANK SCHEDULE

UNIT NO.	MANUFACTURER AND MODEL OR APPROVED EQUAL	SERVICE	CAPACITY (GAL)	DIMENSIONS			SHP WT (LBS)	REMARKS
				L	W	H		
FT 1	CONVAULT	GENERATOR FUEL STORAGE	1000	11'-0"	5'-8"	4'-4"	18,000	ABOVE GROUND CONCRETE FUEL STORAGE TANK. PROVIDE REMOTE FILL STATION, LEVEL SENSORS, LEAK DETECTOR, AND ALARM PANEL.

REVISIONS

NO.	DATE

ROSS S. OKUDA
LICENSED PROFESSIONAL ENGINEER
No. 9377-H
HAWAII, U.S.A.
Expiration Date: 4/30/2014

THIS PROJECT WAS PREPARED BY ME OR UNDER MY SUPERVISION AND CONSTRUCTION OF THIS PROJECT WILL BE UNDER MY SUPERVISION.

KAKAAKO WORKFORCE HOUSING PER SUBCHAPTER 4 OF 2011 MAUKA PLAN AND RULES
801 SOUTH STREET
HONOLULU, HAWAII

PLUMBING EQUIPMENT SCHEDULES

KAZU YATO, AIA & ASSOCIATES, INC.
2222 ROUNDTOP TERRACE
HONOLULU, HI 96822
TEL: (808) 945-2040
FAX: (808) 945-2041

DATE	DRAWN	CHECK	FILE
DATE	MEI	RSO	

SHEET

P4.1

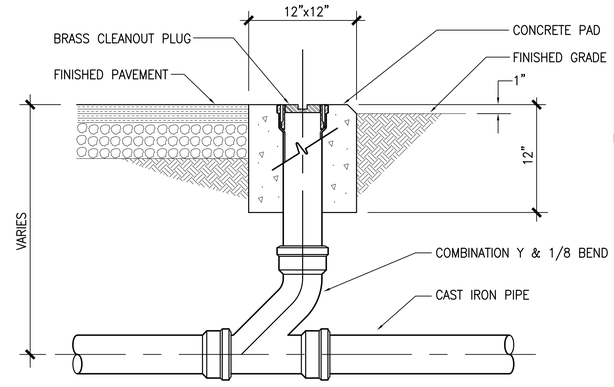

1 P5.1 **CLEANOUT TO GRADE DETAIL**
NOT TO SCALE

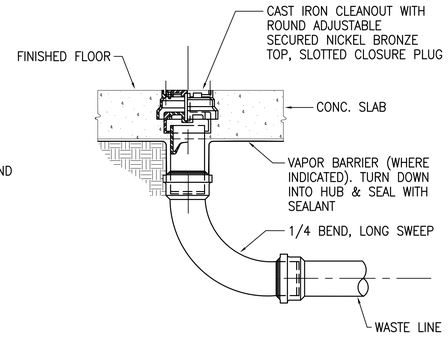

2 P5.1 **FLOOR CLEANOUT DETAIL**
NOT TO SCALE

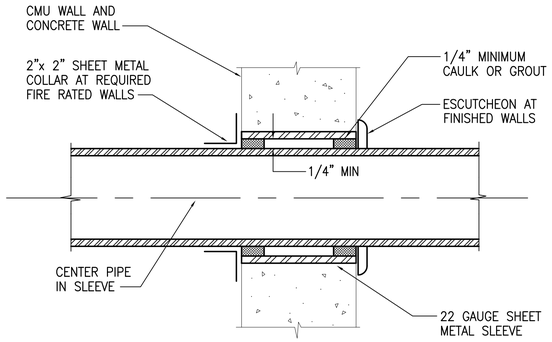

3 P5.1 **PIPE THRU INTERIOR CONCRETE WALL DETAIL**
NOT TO SCALE

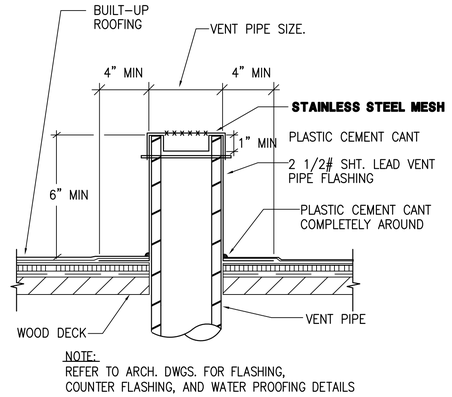

4 P5.1 **VENT THRU ROOF DETAIL**
NOT TO SCALE

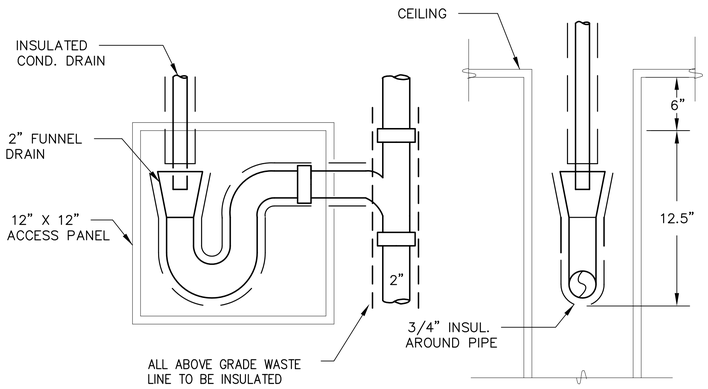

5 P5.1 **FUNNEL DRAIN DETAIL**
NOT TO SCALE

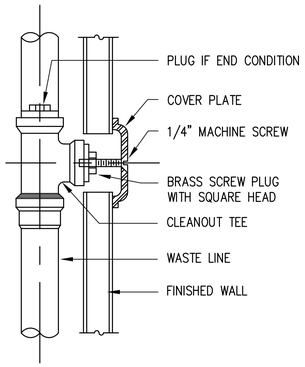

6 P5.1 **WALL CLEANOUT DETAIL**
NOT TO SCALE

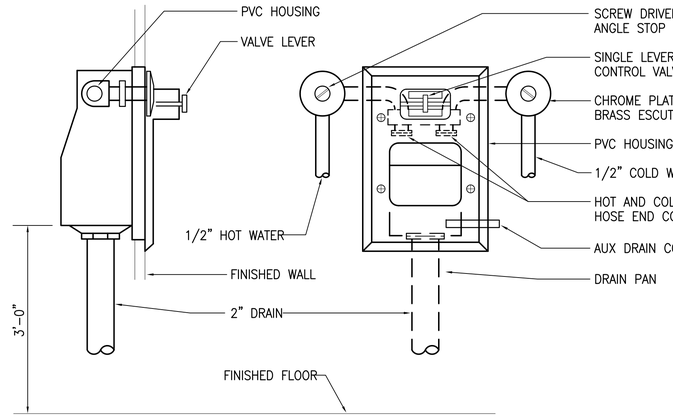

7 P5.1 **CLOTHES WASHER VALVE BOX DETAIL**
NOT TO SCALE

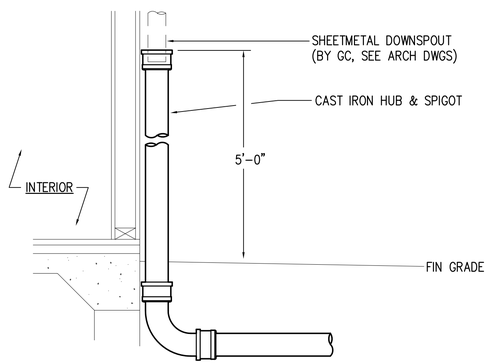

9 P5.1 **DOWNSPOUT CONNECTION DETAIL**
NOT TO SCALE

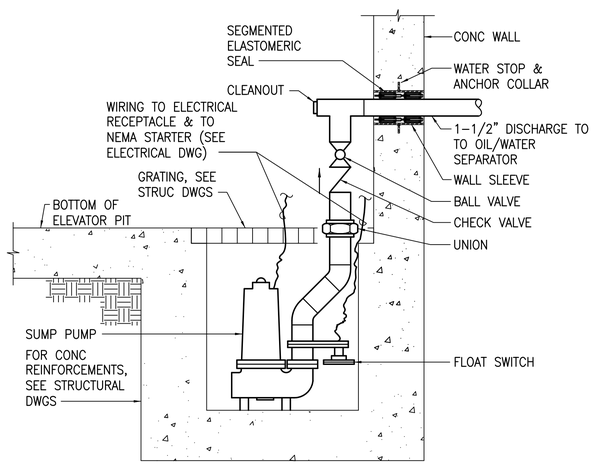

10 P5.1 **SUMP PUMP DETAIL**
NOT TO SCALE

REVISIONS

NO.	DATE



Expiration Date: 4/30/2014

THIS PROJECT WAS PREPARED BY ME OR UNDER MY SUPERVISION AND CONSTRUCTION OF THIS PROJECT WILL BE UNDER MY SUPERVISION.



KAKAAKO WORKFORCE HOUSING PER
SUBCHAPTER 4 OF 2011 MAUKA PLAN AND RULES
801 SOUTH STREET
HONOLULU, HAWAII

PLUMBING DETAILS

KAZU YATO, AIA & ASSOCIATES, INC.
2333 KAPIOLANI BOULEVARD
HONOLULU, HI 96822
TEL: (808) 945-0040
FAX: (808) 945-0041

DATE	DRAWN	CHECK	FILE
DATE	MEI	RSO	

SHEET

P5.1

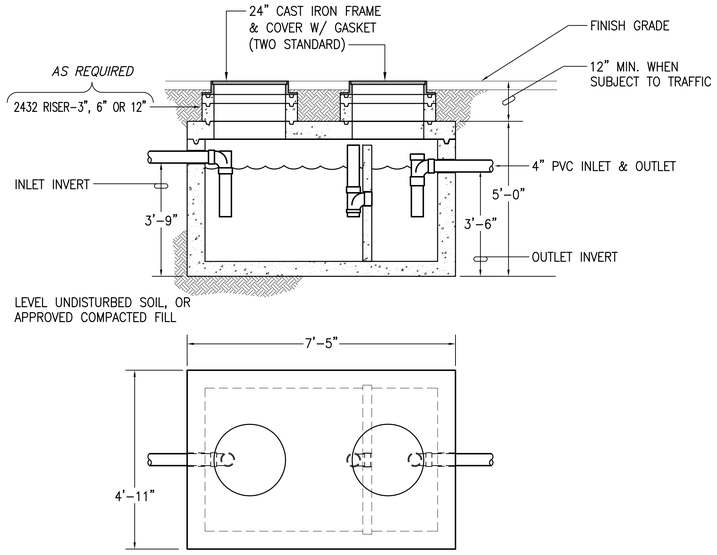

NOTES:

1. TANK DESIGNED FOR H–20 TRAFFIC WHEEL LOAD WITH 1' TO 6' EARTH COVER AND WATER TABLE AT 1' BELOW GRADE.
2. SUITABLE NATIVE SOIL OR GRANULAR SUB–BASE SHALL BE COMPACTED AND LEVELED TO HANDLE ANTICIPATED LOADS.
3. INTERIOR AND EXTERIOR CONCRETE SURFACES SHALL BE COATED WITH AN APPROVED BITUMINOUS MATERIAL.

1 / P5.2 **SAND/OIL INTERCEPTOR DETAIL**
NOT TO SCALE

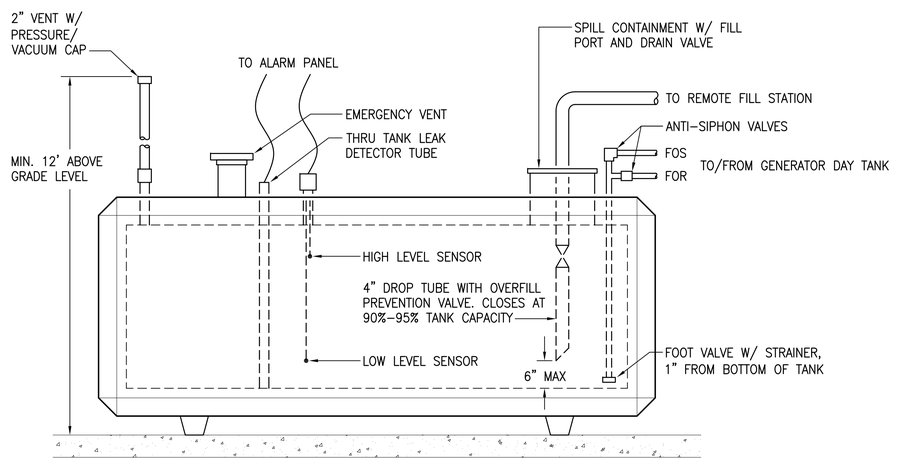

1 / P5.2 **GENERATOR FUEL STORAGE TANK DETAIL**
NOT TO SCALE

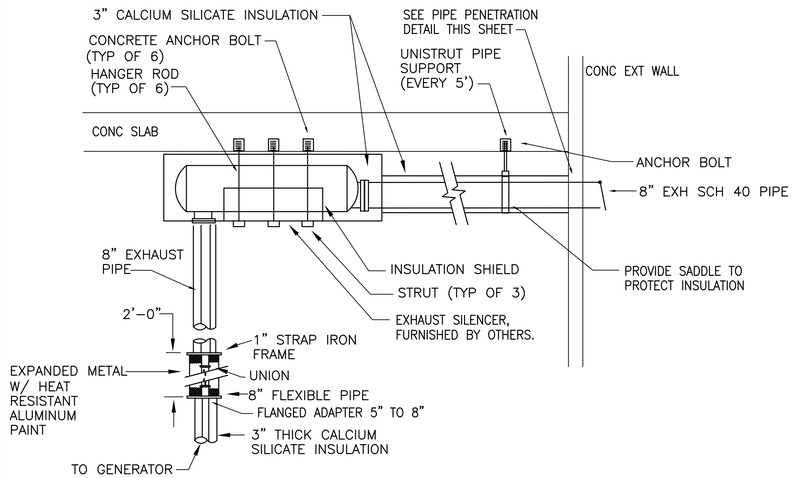

8 / P5.2 **GENERATOR EXHAUST DETAIL**
NOT TO SCALE

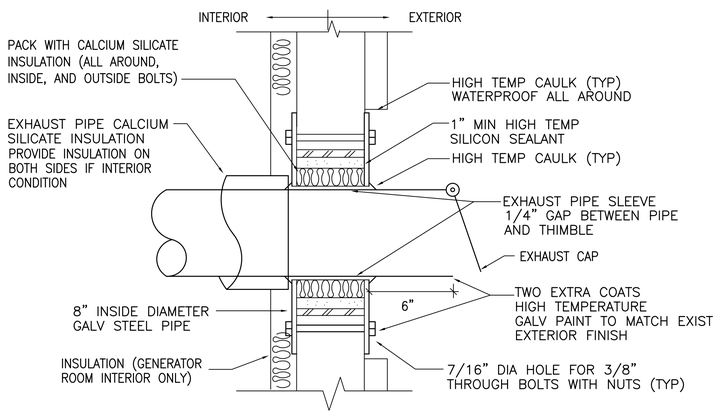

9 / P5.2 **EXHAUST THIMBLE DETAIL**
NOT TO SCALE

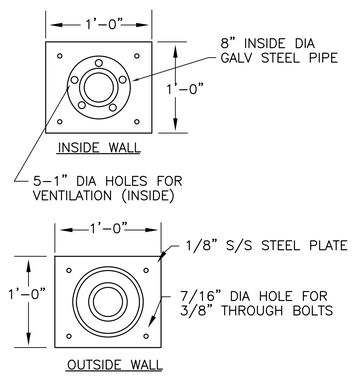

REVISIONS

NO.	DATE

ROSS S. OKUDA
LICENSED PROFESSIONAL ENGINEER
No. 9377-H
HAWAII, U.S.A.
Expiration Date: 4/30/2014

THIS PROJECT WAS PREPARED BY ME OR UNDER MY SUPERVISION AND CONSTRUCTION OF THIS PROJECT WILL BE UNDER MY SUPERVISION.

KAZU YATO, AIA & ASSOCIATES, INC.
2222 ROUNDTOP TERRACE
HONOLULU, HI 96822
TEL: (808) 945-2040
FAX: (808) 945-2041

DATE	DATE	MEI	RSO	FILE
		DRAWN	CHECK	

KAKAAKO WORKFORCE HOUSING PER
SUBCHAPTER 4 OF 2011 MAUKA PLAN AND RULES
801 SOUTH STREET
HONOLULU, HAWAII

PLUMBING DETAILS

SHEET
P5.2

AUTOMATIC FIRE SPRINKLER SYSTEM NOTES:

1. PROVIDE COMPLETE FIRE SPRINKLER COVERAGE IN ACCORDANCE WITH NFPA 13, CURRENT EDITION, AND THE FOLLOWING CRITERIA:
   - A. CLASSIFICATION OF OCCUPANCY:
     DWELLING UNIT, MULTIPURPOSE ROOMS AND OFFICE SHALL BE LIGHT HAZARD. TRASH, MECHANICAL ROOMS, ELECTRICAL ROOMS, ELEVATOR MACHINE ROOM, AND JANITOR ROOM SHALL BE ORDINARY HAZARD GROUP 1.
   - B. DESIGN DENSITY:
     DWELLING UNITS AND OFFICES SHALL BE 0.10 GPM/SF.
     TRASH, MECHANICAL ROOM, ELECTRICAL ROOM, PARKING AREA, AND JANITOR ROOM SHALL BE 0.15 GPM/SF.
   - C. DESIGN METHOD:
     DWELLING UNITS SHALL BE ROOM DESIGN METHOD.
     TRASH, MECHANICAL ROOM, ELECTRICAL ROOM, PARKING AREA, AND JANITOR ROOM SHALL BE AREA DENSITY METHOD.
   - D. DESIGN AREA:
     DWELLING UNITS SHALL BE BASED ON THE MOST REMOTE APARTMENT UNIT.
     TRASH, MECHANICAL ROOM, ELECTRICAL ROOM, PARKING AREA, AND JANITOR ROOM SHALL BE 1,500 SF.
   - E. INSIDE HOSE STREAM ALLOWANCE:
     DWELLING UNITS AND OFFICES SHALL BE 100 GPM.
     TRASH, MECHANICAL ROOM, ELECTRICAL ROOM, PARKING AREA, AND JANITOR ROOM SHALL BE 250 GPM.
   - F. DURATION OF SUPPLY:
     DWELLING UNITS AND OFFICES SHALL BE 30 MINUTES.
     TRASH, MECHANICAL ROOM, ELECTRICAL ROOM, PARKING AREA, AND JANITOR ROOM SHALL BE 60 MINUTES.
   - G. AVAILABLE WATER SUPPLY AT HYDRANT M-05316 ON KAWAIHAO ST.:
     FLOW: 4,000 GPM STATIC: 75 PSI RESIDUAL: 36 PSI
2. THESE FIRE SPRINKLER PLANS ARE PRELIMINARY PLANS WHICH ARE SUBMITTED FOR THE CONDITIONAL APPROVAL OF THE FIRE DEPARTMENT AND THE DEPARTMENT OF DESIGN & CONSTRUCTION. SIX (6) SETS OF COMPLETE WORKING PLANS (SHOP DRAWINGS), HYDRAULIC CALCULATIONS PREPARED IN ACCORDANCE WITH NFPA 13, AND REVIEWED BY A REGISTERED ENGINEER SHALL BE SUBMITTED TO THE FIRE DEPARTMENT, DEPARTMENT OF DESIGN & CONSTRUCTION, AND HAWAII INSURANCE RATING BUREAU FOR APPROVAL BEFORE INSTALLATION.
3. THESE PLANS WERE PREPARED FOR PRICING AND GENERAL CONFORMANCE REQUIREMENTS ONLY; THE CONTRACTOR IS RESPONSIBLE FOR THE ACTUAL DESIGN AND LAYOUT. THE LOCATION OF PIPING, SPRINKLERS, AND ACCESSORIES, AND QUANTITY OF FIRE SPRINKLERS ARE APPROXIMATE. CONTRACTOR SHALL ALSO VERIFY THE ROUTING OF PIPING AND LOCATION OF ACCESSORIES PRIOR TO INSTALLATION. ALL DEVIATIONS FROM THE PRELIMINARY PLANS SHALL BE CLEALY INDICATED ON THE COMPLETE WORKING PLANS FOR THE APPROVAL BY THE ENGINEER PRIOR TO INSTALLATION.
4. HANGERS FOR FIRE SPRINKLER PIPING SHALL BE IN ACCORDANCE TO NFPA 13.
5. THE FOLLOWING ARE THE REQUIREMENTS FOR ELEVATOR INSPECTION BUREAU:
   - A. A HEAT DETECTOR IN THE ELEVATOR MACHINE ROOM SHALL REMOVE ALL ELECTRICAL POWER TO THE ELEVATORS AND WILL OPEN A FLOW CONTROL VALVE ALLOWING WATER INTO THE SPRINKLER SYSTEM IN THE MACHINE ROOM. THE SPRINKLER SYSTEM IN THE MACHINE ROOM WILL BE EQUIPPED WITH A FUSIBLE LINK TYPE OF HEAD WITH A RATING HIGHER THAN THAT OF THE HEAT DETECTOR.
   - B. A HEAT DETECTOR IN THE ELEVATOR SHAFT WILL REMOVE THE MAIN POWER TO THE AFFECTED ELEVATOR ONLY AND WILL OPEN A FLOW CONTROL VALVE TO ALLOW WATER TO CHARGE THE SPRINKLER SYSTEM. THE HEADS FOR THE SPRINKLER SYSTEM LOCATED IN THE HOISTWAY SHALL BE FUSIBLE LINK TYPE OF HEAD WITH A RATING HIGHER THAN THAT OF THE HEAT DETECTOR.
   - C. SPRINKLER PIPES INSTALLED AT THE TOP OF THE SHAFT SHALL NOT INTERFERE WITH CLEARANCE.
   - D. SPRINKLER PIPES AND SPRINKLER HEAD LOCATION SHALL NOT OBSTRUCT UNDER CAR CLEARANCE AND WORKING AREA.
6. FIRE SAFETY DURING CONSTRUCTION, ALTERATION OR DEMOLITION SHALL BE IN ACCORDANCE WITH ARTICLE 87, UFC 1997.
7. FIRESTOP ALL PIPE AND CONDUIT PENETRATIONS THROUGH FIRE RATED WALLS.
8. ALL DEVICES AND EQUIPMENT SHALL BE UL LISTED AND FM APPROVED.
9. ALL SPRINKLERS SHALL BE APPROVED QUICK RESPONSE TYPE. EXCEPT ELEVATOR SPACES SHALL BE STANDARD RESPONSE TYPE.
10. PIPE AND FITTINGS SHALL COMPLY WITH NFPA 13, EXCEPT THAT ALL PIPING SHALL BE STEEL. PROVIDE HOT DIPPED GALVANIZED PIPE AND FITTINGS ON ALL EXTERIOR PIPING INCLUDING THE RISER.
11. PIPING SHALL BE PROVIDED WITH EARTHQUAKE PROTECTION IN ACCORDANCE WITH NFPA 13.
12. PROVIDE INSPECTION AND HYDROSTATIC TESTS IN ACCORDANCE WITH NFPA 13 CHAPTER 8. PRIOR TO HYDROSTATIC TESTS THE CONTRACTOR SHALL PERFORM AN AIR PRESSURE TEST TO LOCATE POTENTIAL LEAKAGE POINTS. INSPECTION AND TESTS SHALL BE CERTIFIED IN ACCORDANCE WITH HONOLULU FIRE DEPARTMENT REQUIREMENTS. CONTRACTOR SHALL TAG SYSTEM AND SUBMIT TEST REPORT IN ACCORDANCE TO HFD REQUIREMENTS.
13. SPECIAL INSPECTIONS FOR AUTOMATIC FIRE SPRINKLER SYSTEM SHALL BE PROVIDED IN ACCORDANCE WITH HONOLULU BUILDING CODE AMENDMENTS TO SECTION 1701.5.14.
14. SPARE SPRINKLERS SHALL BE PROVIDED IN ACCORDANCE WITH THE 1997 UFC SECTION 1003.1.1 AS AMENDED. FURNISH LOCKABLE CABINET AND INSTALL INSIDE OF BUILDING. VERIFY WITH OWNER THE LOCATION OF SPARE SPRINKLER HEAD CABINET SHOWN ON PLANS.
15. TWO SETS (2) OF COMPLETE WORKING PLANS AND HYDRAULIC CALCULATIONS STAMPED AND SIGNED BY A HAWAII LICENSED MECHANICAL ENGINEER SHALL BE SUBMITTED, AS APPLICABLE, TO THE FIRE PROTECTION SPECIAL INSPECTOR (FPSI) FOR CODE COMPLIANCE REVIEW. ONE (1) SET WITH THE FPSI APPROVAL STAMP SHALL BE SUBMITTED TO THE DPP BUILDING DIVISION ALONG WITH THE FPSI FINAL REPORT/LETTER PRIOR TO CLOSING OF THE BUILING PERMIT.

FIRE SPRINKLER GENERAL NOTES:

1. THE ENTIRE INSTALLATION SHALL COMPLY WITH ALL APPLICABLE REQUIREMENTS OF THE BUILDING CODE OF THE CITY AND COUNTY OF HONOLULU, STATE DEPARTMENT OF HEALTH REGULATIONS, UNIFORM PLUMBING CODE, UNIFORM FIRE CODE, NATIONAL ELECTRICAL CODE, HAWAII STATE MODEL ENERGY CODE, AND ALL OTHER AGENCIES HAVING JURISDICTION.
2. THE DRAWINGS AND SPECIFICATIONS ARE INTENDED TO COVER THE COMPLETE INSTALLATION OF SYSTEMS TO FUNCTION AS DESCRIBED AND SPECIFIED. THE OMISSION OF REFERENCE TO ANY NECESSARY ITEM OF LABOR OR MATERIAL SHALL NOT RELIEVE THE CONTRACTOR FROM PROVIDING SUCH LABOR AND MATERIAL.
3. ALL EQUIPMENT SHALL BE CAPABLE OF FITTING INTO THE SPACES ALLOCATED WHILE MEETING THE MANUFACTURER'S RECOMMENDED ACCESS REQUIREMENTS. REVIEW ALL SPACES WHERE EQUIPMENT IS TO BE INSTALLED PRIOR TO ORDERING OF EQUIPMENT AND NOTIFY THE ENGINEER OF ANY INADEQUATE CLEARANCES OR CONDITIONS THAT WILL PREVENT THE PROPER INSTALLATION, MAINTENANCE, AND OPERATION OF THE EQUIPMENT.
4. OBTAIN APPROVAL FROM THE ARCHITECT BEFORE MAKING ANY PENETRATIONS THROUGH STRUCTURAL MEMBERS, WALLS, AND SLABS.
5. ALL FIRE SPRINKLER CONTROL VALVES AND WATER FLOW SWITCHES MUST BE ELECTRICALLY MONITORED IN ACCORDANCE WITH 1997 UBC SECTION 904.3.1. VALVE MONITORING, WATER FLOW, AND TROUBLE SIGNAL SHALL BE MONITORED ON THE ISLAND OF OAHU.
6. DRAWINGS FILES WILL NOT BE AVAILABLE TO CONTRACTORS FOR SHOP DRAWINGS OR ANY OTHER PURPOSE.

FIRE SPRINKLER LEGEND

SYMBOL	ABBRV.	DESCRIPTION
	AFF	ABOVE FINISHED FLOOR
	CLG	CEILING
⊗	FE	FIRE EXTINGUISHER
	FEC	FIRE EXTINGUISHER CABINET
	FDC	FIRE DEPARTMENT CONNECTION
	FHC	FIRE HOSE CABINET
	FLR	FLOOR
	FP	FIRE PUMP
	FS, SPK	FIRE SPRINKLER
	HEGV	HOSE-END GATE VALVE
—⋈—	OS&Y GV	OUTSIDE STEM & YOKE GATE VALVE
—◎—		PENDANT TYPE SPRINKLER HEAD
	POC	POINT OF CONNECTION
	PRV	PRESSURE REDUCING VALVE
▷—		SIDEWALL SPRINKLER HEAD
—⋈—		SOLENOID VALVE
	TYP	TYPICAL
—○—		UPRIGHT TYPE SPRINKLER HEAD
	WSP	WET STAND PIPE

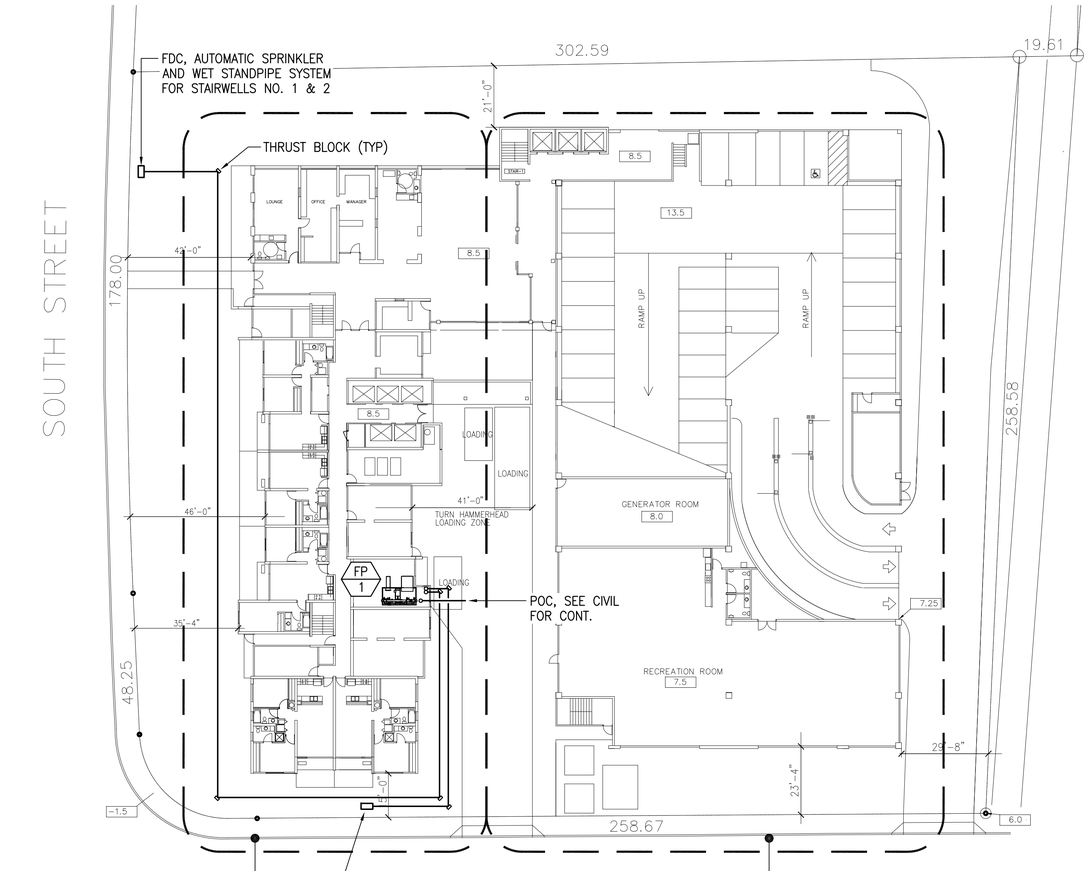

1 / FS0.1 **FIRE SPRINKLER SITE PLAN** NOT TO SCALE

NORTH

ENERGY CODE COMPLIANCE

CITY AND COUNTY OF HONOLULU
REVISED ORDINANCE CHAPTER 32
HONOLULU COUNTY CODE 1990, AS AMENDED

TO THE BEST OF MY KNOWLEDGE, THIS PROJECT'S DESIGN SUBSTANTIALLY CONFORMS TO THE BUILDING ENERGY CONSERVATION CODE FOR:

✓ MECHANICAL COMPONENT SYSTEMS

SIGNATURE: R.S. Okuda
NAME: ROSS S. OKUDA
TITLE: PRESIDENT
PE #: 9377-M

ROSS S. OKUDA LICENSED PROFESSIONAL ENGINEER No. 9377-M HAWAII, U.S.A.
EXP. 4-30-2014

HYDRAULIC CALCULATIONS (FP-1)

PIPING AND FITTING LOSSES: 550 FT x 4' LOSS/100'	= 22.0 FT
ELEVATION LOSSES:	= 400.0 FT
METER LOSS: 3 PSI	= 6.9 FT
BACKFLOW PREVENTER & STRAINER LOSS: 10 PSI MAX	= 23.1 FT
INTERNAL PUMP STATION LOSSES: 5 PSI	= 11.5 FT
PRESSURE REQUIRED AT TOP: 100 PSI	= 230.7 FT
TOTAL PRESSURE REQUIRED:	= 694.2 FT
RESIDUAL STREET PRESSURE AT 750 GPM: 68 PSI	= 156.9 FT
PUMP HEAD REQUIRED:	= 537.3 FT
SAFETY FACTOR: 10%	= 53.7 FT
TOTAL:	= 591.0 FT
SAY:	= 600.0 FT

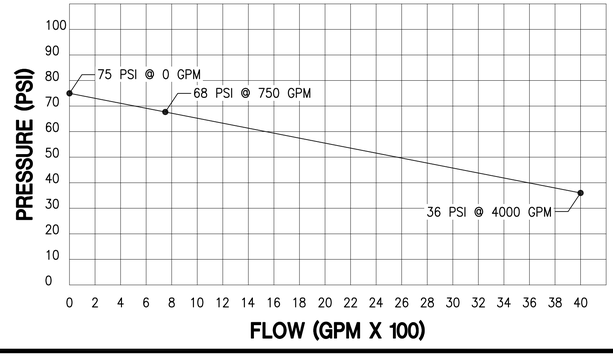

REVISIONS | NO. | DATE

ROSS S. OKUDA LICENSED PROFESSIONAL ENGINEER No. 9377-M HAWAII, U.S.A.
Expiration Date: 4/30/2014

THIS PROJECT WAS PREPARED BY ME OR UNDER MY SUPERVISION AND CONSTRUCTION OF THIS PROJECT WILL BE UNDER MY SUPERVISION.

KAKAAKO WORKFORCE HOUSING PER SUBCHAPTER 4 OF 2011 MAUKA PLAN AND RULES
801 SOUTH STREET
HONOLULU, HAWAII

FIRE SPRINKLER NOTES, LEGEND, CALCS, SITE PLAN

KAZU YATO, AIA & ASSOCIATES, INC.
2333 KAPIOLANI BLVD. #1702
HONOLULU, HI 96826
TEL: (808) 945-0040
FAX: (808) 945-0041

DATE	DRAWN	CHECK	FILE
DATE	MEI	RSO	

SHEET
FS0.1

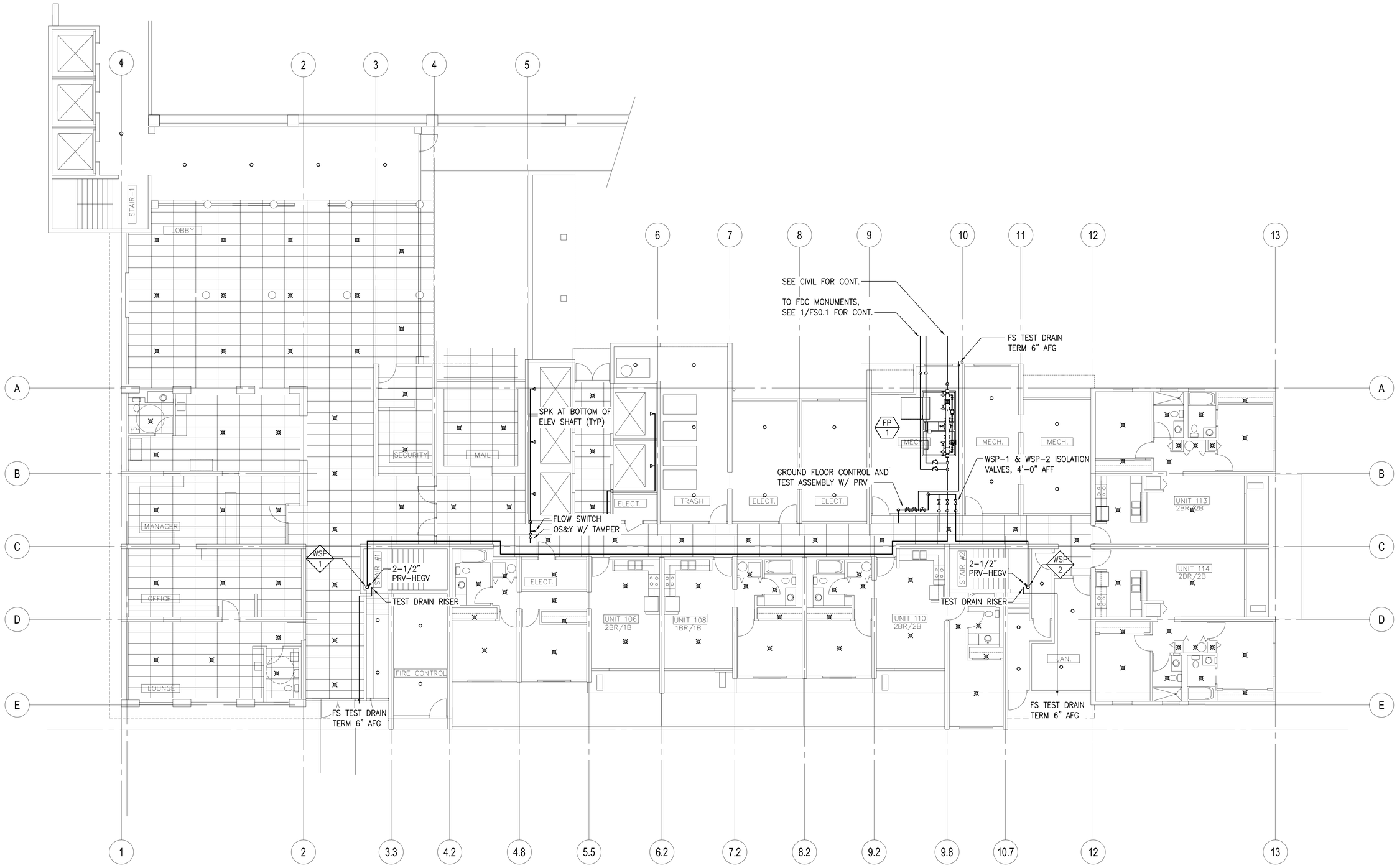

1 / FS1.1 **TOWER - GROUND FLOOR FIRE SPRINKLER PLAN**
SCALE: 1/8" = 1'-0"

0 8' 16' 24'
SCALE: 1/8"=1'-0"

NORTH

REVISIONS

NO.	DATE

ROSS S. OKUDA
LICENSED PROFESSIONAL ENGINEER
No. 9377-M
HAWAII, U.S.A.
Expiration Date: 4/30/2014

THIS PROJECT WAS PREPARED BY ME OR UNDER MY SUPERVISION AND CONSTRUCTION OF THIS PROJECT WILL BE UNDER MY SUPERVISION.

KAKAAKO WORKFORCE HOUSING PER SUBCHAPTER 4 OF 2011 MAUKA PLAN AND RULES
801 SOUTH STREET
HONOLULU, HAWAII

TOWER - GROUND FLOOR FIRE SPRINKLER PLAN

KAZU YATO, AIA & ASSOCIATES, INC.
2452 SEASTEP TERRACE
HONOLULU, HI 96822
TEL: (808) 945-0940
FAX: (808) 945-0941

DATE	DATE	DRAWN	CHECK	FILE
		WEI	KSO	

SHEET

FS1.1

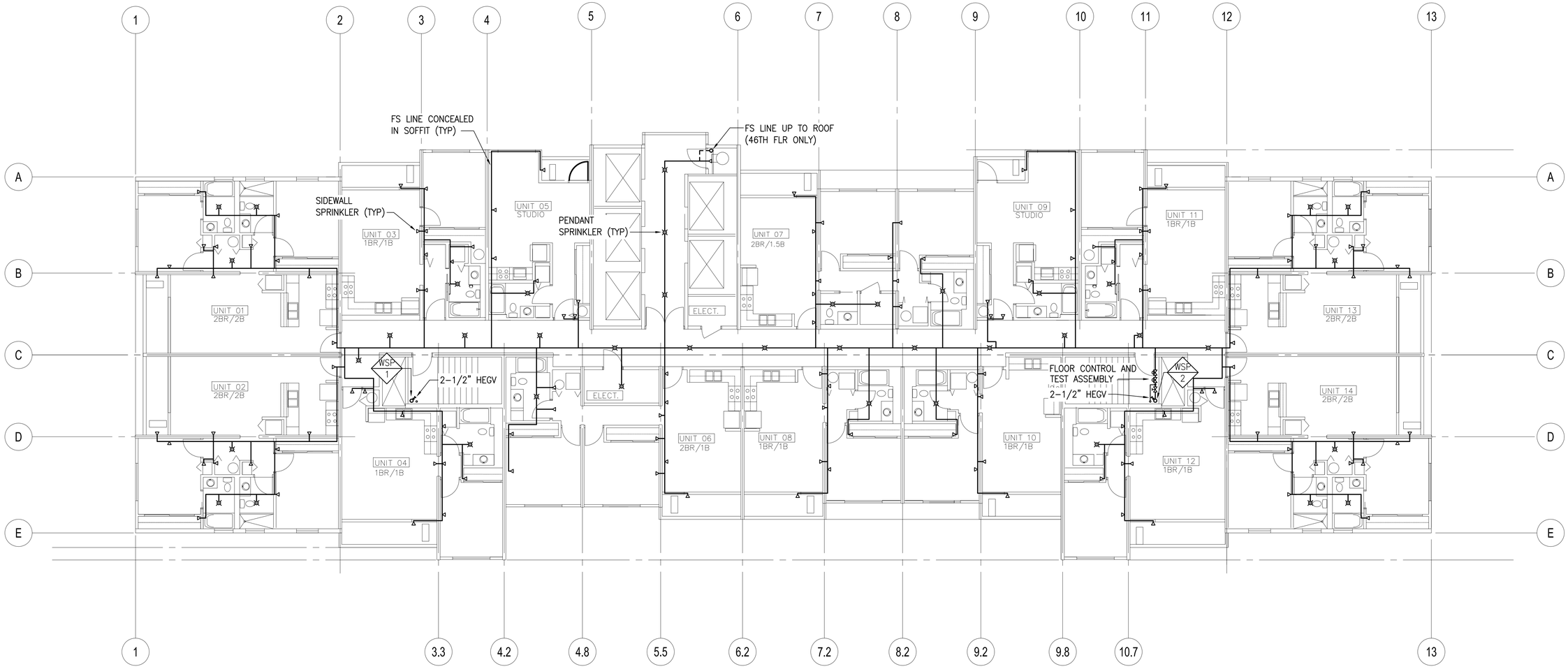

1 / FS1.2 **TOWER - TYPICAL FIRE SPRINKLER PLAN**

SCALE: 1/8" = 1'-0" 2ND – 46TH FLR

0 8' 16' 24'

SCALE: 1/8"=1'-0"

NORTH

NO.	DATE	REVISIONS

ROSS S. OKUDA LICENSED PROFESSIONAL ENGINEER No. 9377-M HAWAII, U.S.A.

Expiration Date: 4/30/2014

THIS PROJECT WAS PREPARED BY ME OR UNDER MY SUPERVISION AND CONSTRUCTION OF THIS PROJECT WILL BE UNDER MY SUPERVISION.

KAKAAKO WORKFORCE HOUSING PER SUBCHAPTER 4 OF 2011 MAUKA PLAN AND RULES

801 SOUTH STREET
HONOLULU, HAWAII

TOWER - TYPICAL FIRE SPRINKLER PLAN, 2ND - 46TH FLOOR

KAZU YATO, AIA & ASSOCIATES, INC.
2053 KOHAITOP TERRACE
HONOLULU HI 96822
TEL: (808) 945-0040
FAX: (808) 945-0041

DATE	DATE	DRAWN	MEI	CHECK	KSO	FILE

SHEET

FS1.2

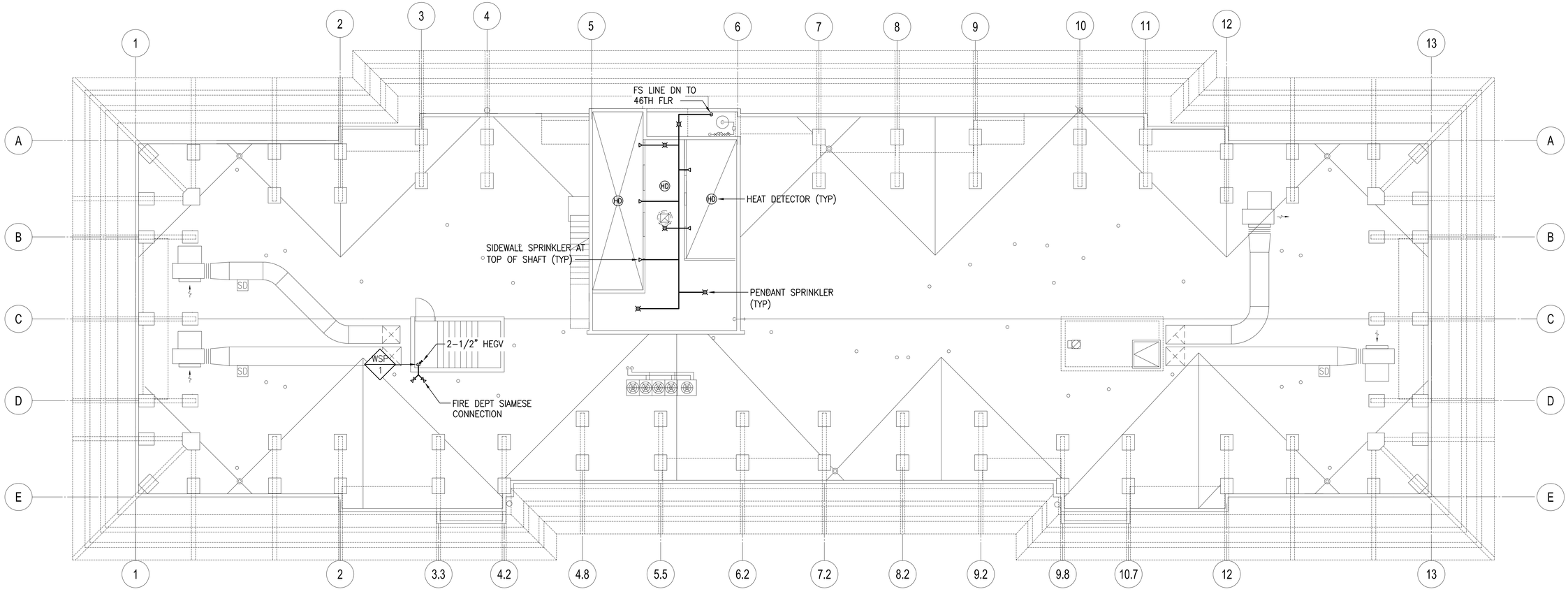

1 FS1.3 **TOWER - FIRE SPRINKLER ROOF PLAN**

SCALE: 1/8" = 1'-0" 2ND – 46TH FLR

0 8' 16' 24'

SCALE: 1/8"=1'-0"

NORTH

REVISIONS

NO.	DATE

ROSS S. OKUDA
LICENSED PROFESSIONAL ENGINEER
No. 9377-M
HAWAII, U.S.A.
Expiration Date: 4/30/2014

THIS PROJECT WAS PREPARED BY ME OR UNDER MY SUPERVISION AND CONSTRUCTION OF THIS PROJECT WILL BE UNDER MY SUPERVISION.

KAKAAKO WORKFORCE HOUSING PER
SUBCHAPTER 4 OF 2011 MAUKA PLAN AND RULES
801 SOUTH STREET
HONOLULU, HAWAII

TOWER - ROOF FIRE SPRINKLER PLAN

KAZU YATO, AIA & ASSOCIATES, INC.
2033 ROUNDTOP TERRACE
HONOLULU, HI 96822
TEL: (808) 945-0040
FAX: (808) 945-0041

DATE	DATE
DRAWN	MEI
CHECK	RSD
FILE	

SHEET

FS1.3

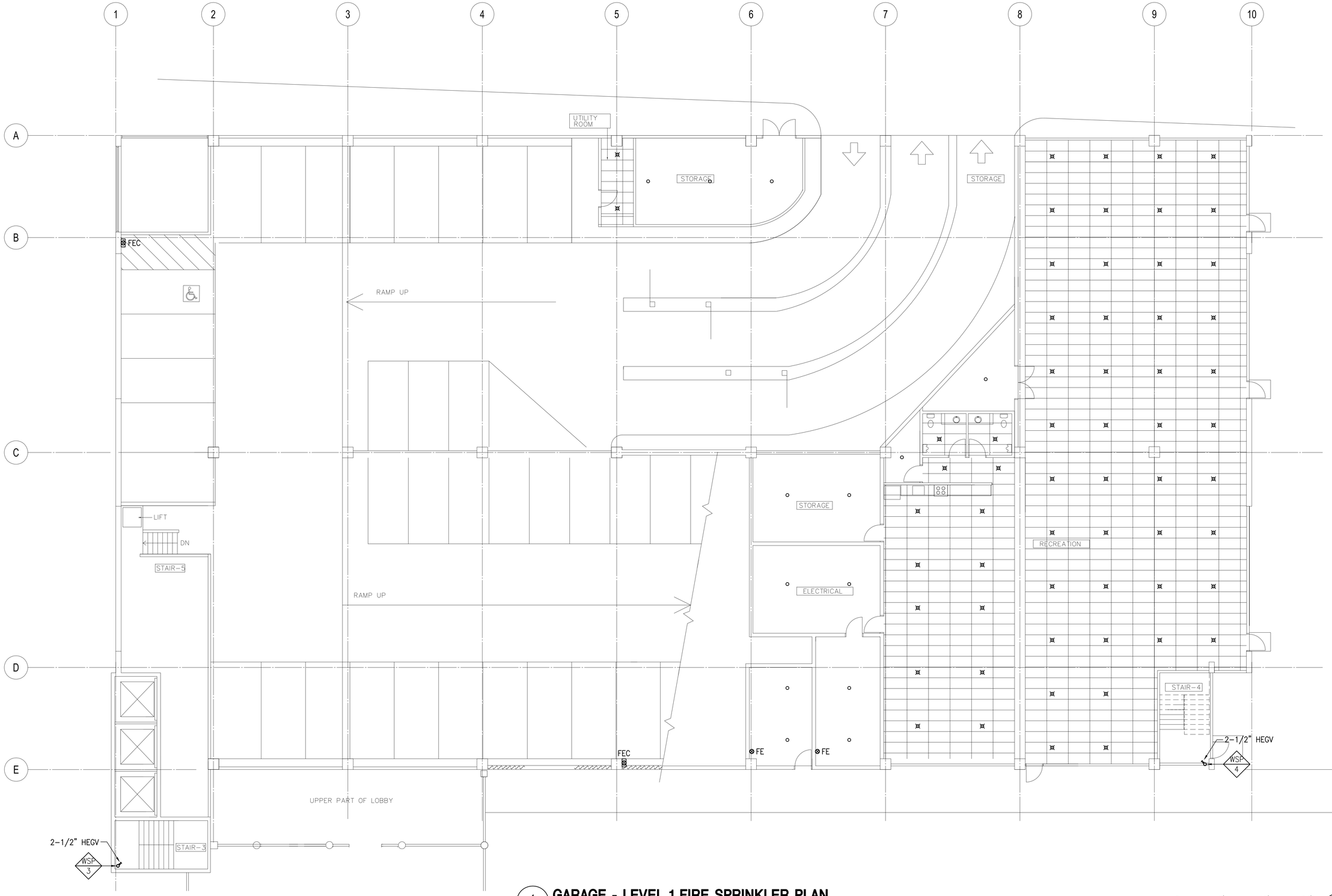

1 FS1.4 **GARAGE - LEVEL 1 FIRE SPRINKLER PLAN**
SCALE: 1/8" = 1'-0"

0 8' 16' 24'
SCALE: 1/8"=1'-0"

NORTH

NO.	DATE	REVISIONS

ROSS S. OKUDA
LICENSED PROFESSIONAL ENGINEER
No. 9377-M
HAWAII, U.S.A.
Expiration Date: 4/30/2014

THIS PROJECT WAS PREPARED BY ME OR UNDER MY SUPERVISION AND CONSTRUCTION OF THIS PROJECT WILL BE UNDER MY SUPERVISION.

KAKAAKO WORKFORCE HOUSING PER
SUBCHAPTER 4 OF 2011 MAUKA PLAN AND RULES
801 SOUTH STREET
HONOLULU, HAWAII

GARAGE - LEVEL 1 FIRE SPRINKLER PLAN

KAZU YATO, AIA & ASSOCIATES, INC.
2222 ROUNDTOP TERRACE
HONOLULU, HI 96822
TEL: (808) 945-2040
FAX: (808) 945-2041

DATE	DATE
DRAWN	MEI
CHECK	RSO
FILE	

SHEET

FS1.4

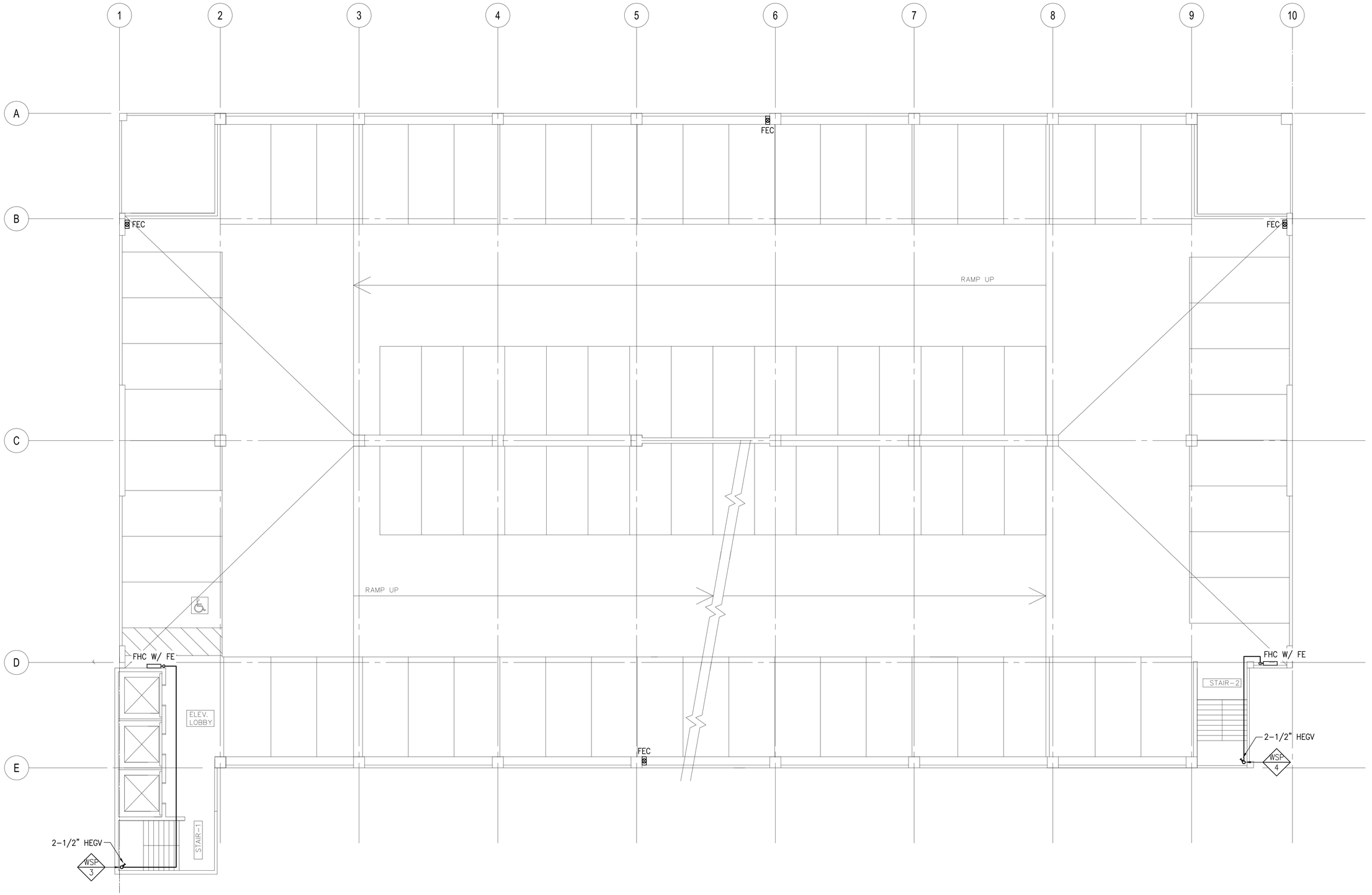

1 FS1.5 **GARAGE - TYPICAL FIRE SPRINKLER PLAN**
SCALE: 1/8" = 1'-0" LEVELS 2 – 9

0 8' 16' 24'
SCALE: 1/8"=1'-0"

NORTH

NO.	DATE	REVISIONS

ROSS S. OKUDA LICENSED PROFESSIONAL ENGINEER No. 9377-M HAWAII, U.S.A.
Expiration Date: 4/30/2014

THIS PROJECT WAS PREPARED BY ME OR UNDER MY SUPERVISION AND CONSTRUCTION OF THIS PROJECT WILL BE UNDER MY SUPERVISION.

KAKAAKO WORKFORCE HOUSING PER
SUBCHAPTER 4 OF 2011 MAUKA PLAN AND RULES
801 SOUTH STREET
HONOLULU, HAWAII

GARAGE - TYPICAL FIRE SPRINKLER PLAN, LEVELS 2 - 9

KAZU YATO, AIA & ASSOCIATES,INC.
2222 KALAKAUA AVENUE
HONOLULU, HI 96822
TEL: (808) 945-2040
FAX: (808) 945-2041

DATE	DRAWN	CHECK	FILE
DATE	MEI	RSO	

SHEET

FS1.5

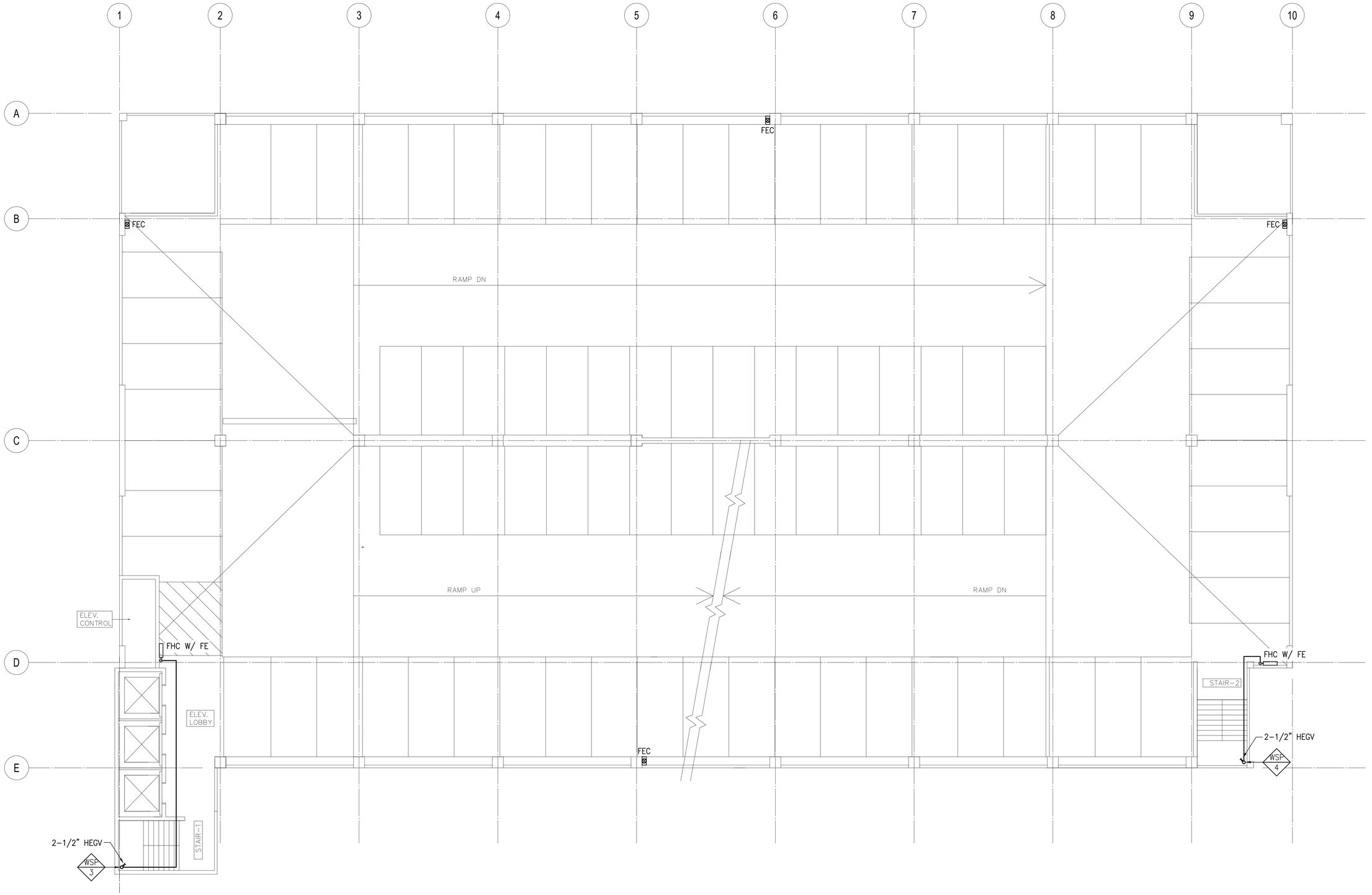

1 FS1.6 **GARAGE - LEVEL 10 FIRE SPRINKLER PLAN**
SCALE: 1/8" = 1'-0"

0 8' 16' 24'
SCALE: 1/8"=1'-0"

NORTH

REVISIONS

NO.	DATE

ROSS S. OKUDA
LICENSED PROFESSIONAL ENGINEER
No. 9377-M
HAWAII, U.S.A.
Expiration Date: 4/30/2014

THIS PROJECT WAS PREPARED BY ME OR UNDER MY SUPERVISION AND CONSTRUCTION OF THIS PROJECT WILL BE UNDER MY SUPERVISION.

KAKAAKO WORKFORCE HOUSING PER
SUBCHAPTER 4 OF 2011 MAUKA PLAN AND RULES
801 SOUTH STREET
HONOLULU, HAWAII

GARAGE - LEVEL 10 FIRE SPRINKLER PLAN

KAZU YATO, AIA & ASSOCIATES, INC.
2033 ROUNDTOP TERRACE
HONOLULU, HI 96822
TEL: (808) 945-0040
FAX: (808) 945-0041

DATE	DATE
DRAWN	MEI
CHECK	RSD
FILE	

SHEET

FS1.6

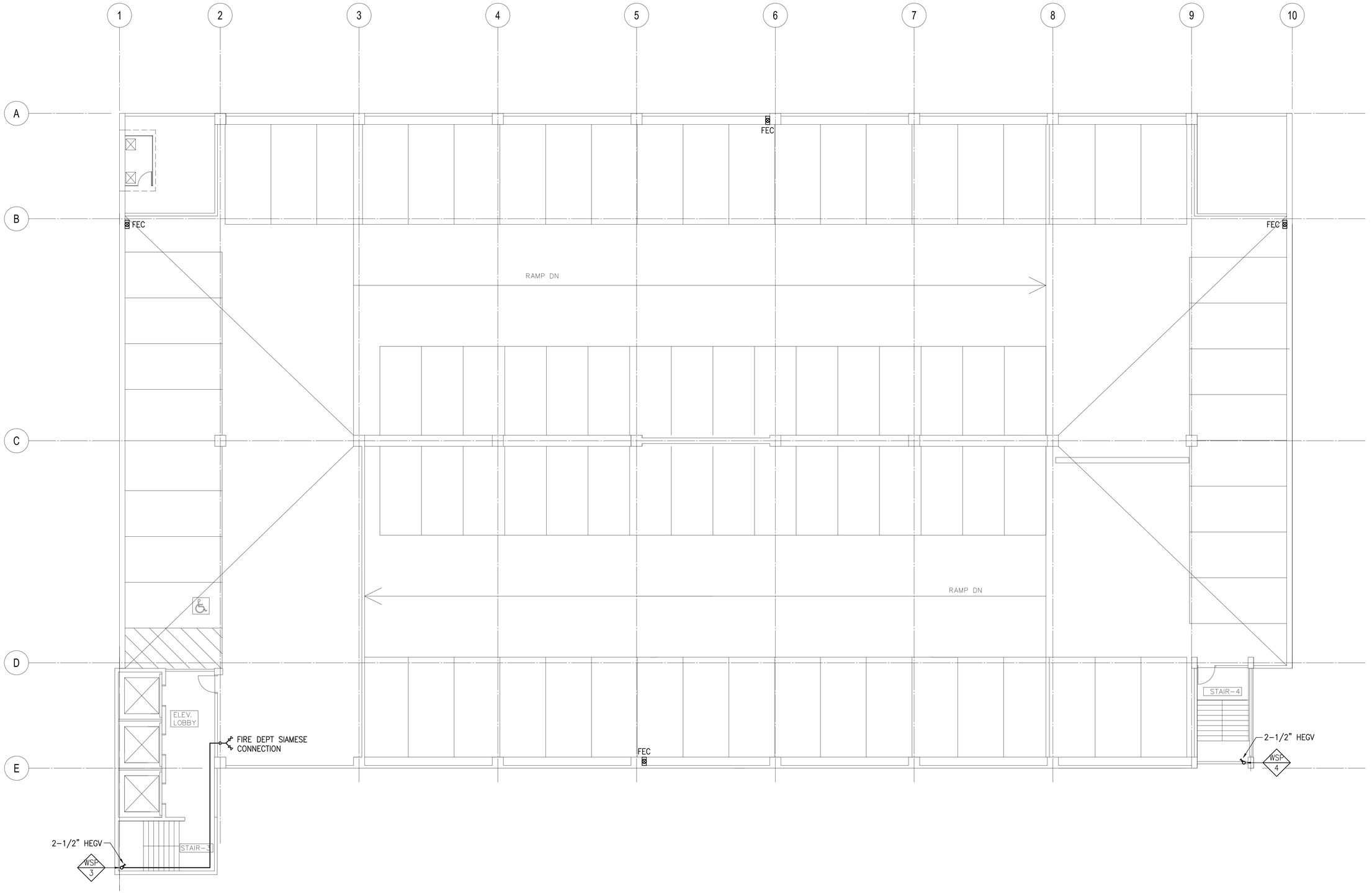

1 FS1.7 **GARAGE - LEVEL 11 FIRE SPRINKLER PLAN**
SCALE: 1/8" = 1'-0"

0 8' 16' 24'
SCALE: 1/8"=1'-0"

NORTH

NO.	DATE	REVISIONS

ROSS S. OKUDA
LICENSED PROFESSIONAL ENGINEER
No. 9377-M
HAWAII, U.S.A.
Expiration Date: 4/30/2014

THIS PROJECT WAS PREPARED BY ME OR UNDER MY SUPERVISION AND CONSTRUCTION OF THIS PROJECT WILL BE UNDER MY SUPERVISION.

KAKAAKO WORKFORCE HOUSING PER
SUBCHAPTER 4 OF 2011 MAUKA PLAN AND RULES

801 SOUTH STREET
HONOLULU, HAWAII

GARAGE - LEVEL 11 FIRE SPRINKLER PLAN

KAZU YATO, AIA & ASSOCIATES,INC.
2222 KALAKAUA AVENUE
HONOLULU, HI 96822
TEL: (808) 945-2040
FAX: (808) 945-2041

DATE	DATE	DRAWN	MEI	CHECK	RSO	FILE

SHEET

FS1.7

ELECTRIC FIRE PUMP SCHEDULE

UNIT NO.	MANUFACTURER AND MODEL OR APPROVED EQUAL	SERVICE	TYPE	SUCT	DISCH	MAIN PUMP					JOCKEY PUMP				ELECTRICAL			OPR WT (LBS)	REMARKS
						MFR AND MODEL	GPM	TDH	RPM	HP	MFR AND MODEL	GPM	TDH	HP	V	ø	Hz		
FP 1	TIGERFLOW	FIRE SPRINKLER SYSTEM	PACKAGED SYSTEM, HORIZ SPLIT CASE	6"	6"	AURORA 4-491-12	750	600	3,500	200	AURORA PVM4-140D	10	615	5	460	3	60	3,000	PACKAGED SKID MOUNTED FIRE PUMP ASSEMBLY COMPLETE WITH VALVES, SUCTION & DISCHARGE, 1-PT POWER CONN, AND CONTROL PANELS

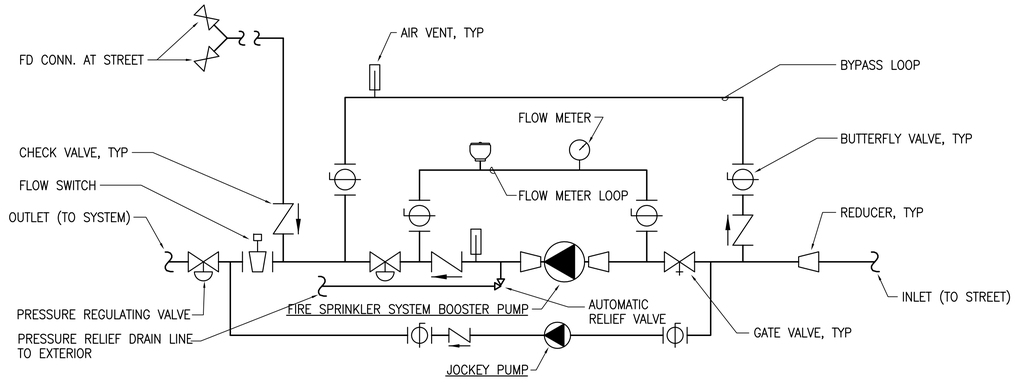

1 FS3.1 **FIRE PUMP SCHEMATIC DETAIL**
NOT TO SCALE

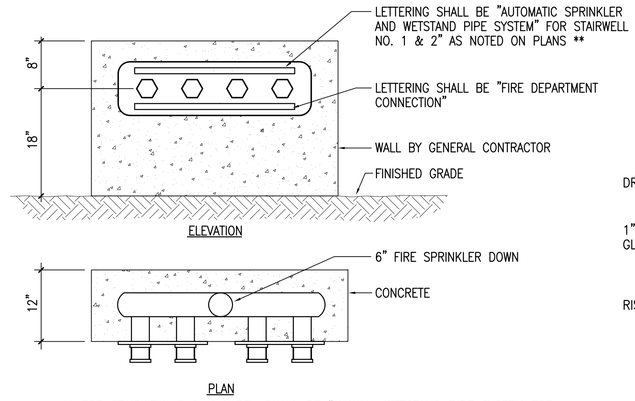

** FOR STAIRWELL 3 & 4 LABEL SHALL BE "MANUAL WETSTAND PIPE SYSTEM FOR STAIRWELL NO. 3 & 4"

2 FS3.1 **FIRE DEPARTMENT CONNECTION DETAIL**
NOT TO SCALE

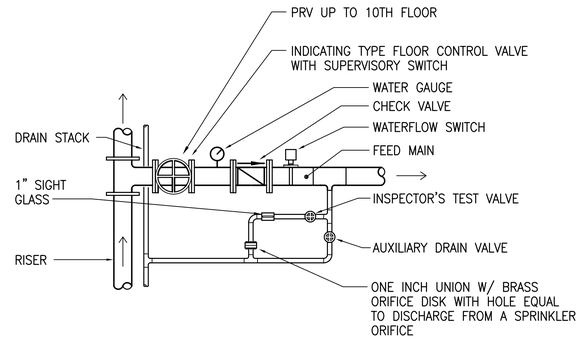

3 FS3.1 **FLOOR CONTROL VALVE ASSEMBLY DETAIL**
NOT TO SCALE

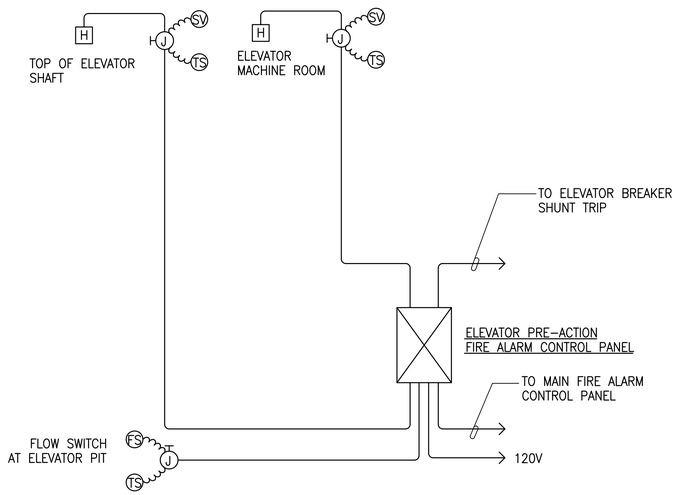

FIRE SPRINKLER CONTROL SYSTEM NOTES:

1. THE FIRE SPRINKLER CONTROL SYSTEM SHALL BE DESIGNED AND INSTALLED IN ACCORDANCE WITH NFPA 72, 1996, SECTION 3-8.14.
2. DEVICES ARE SHOWN IN SUGGESTED LOCATIONS. FINAL QUANTITY AND LAYOUT SHALL BE IN ACCORDANCE WITH APPLICABLE CODES, MANUFACTURER'S RECOMMENDATIONS, AND EQUIPMENT LISTINGS.
3. ALL NEW ALARM CONDUIT SHALL BE 3/4" MINIMUM.
4. ALL INITIATING DEVICES CIRCUITS SHALL BE CLASS A (STYLE D) SUPERVISED. THE RETURN LOOP (HOME RUN) OF EACH CIRCUIT SHALL BE ROUTED IN A SEPARATE RACEWAY FROM THE OUTGOING PORTION OF THE LOOP.

4 FS3.1 **ELEVATOR PRE-ACTION SCHEMATIC**
NOT TO SCALE

FIRE SPRINKLER CONTROL PANEL SEQUENCE OF OPERATION

	SYSTEM INPUT / SYSTEM OUTPUT	A ANNUCIATE ALARM ZONE AT PANEL	B ANNUNCIATE TROUBLE AT PANEL	C ALARM SIGNAL TO BUILDING FA	D TROUBLE SIGNAL TO BUILDING FA	E DISCONNECT ELEVATOR POWER PRIOR TO SOLENOID ACTIVATION	F ACTIVATE SOLENOID	G DISCONNECT ELEVATOR POWER
1	ELEVATOR MACH. RM HEAT DETECTOR	X		X		X	X	
2	TOP OF ELEVATOR SHAFT	X		X		X	X	
3	COMMON TROUBLE/TAMPER SWITCH		X		X			
4	FLOW SWITCH AT ELEVATOR PIT	X		X				X

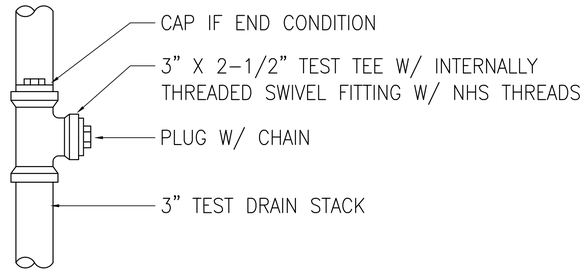

5 FS3.1 **PRV HEGV TEST TEE DETAIL**
NOT TO SCALE

REVISIONS | NO. | DATE

ROSS S. OKUDA LICENSED PROFESSIONAL ENGINEER No. 9377-M HAWAII, U.S.A.
Expiration Date: 4/30/2014

THIS PROJECT WAS PREPARED BY ME OR UNDER MY SUPERVISION AND CONSTRUCTION OF THIS PROJECT WILL BE UNDER MY SUPERVISION.

KAKAAKO WORKFORCE HOUSING PER
SUBCHAPTER 4 OF 2011 MAUKA PLAN AND RULES
801 SOUTH STREET
HONOLULU, HAWAII

FIRE SPRINKLER DETAILS, EQUIPMENT SCHEDULE

KAZU YATO, AIA & ASSOCIATES, INC.
2222 ROUND TOP TERRACE
HONOLULU, HI 96822
TEL: (808) 945-2040
FAX: (808) 945-2041

DATE | DATE | DRAWN | MEI | CHECK | RSD | FILE

SHEET

FS3.1

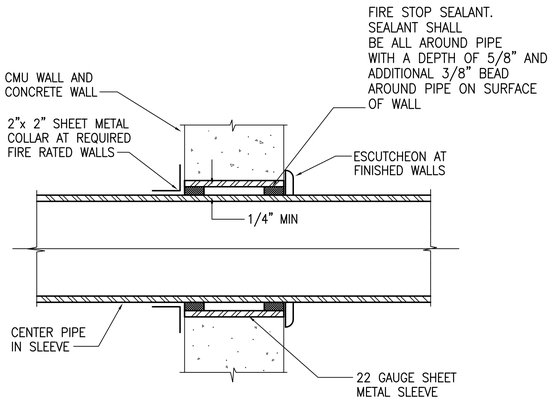

1 FS3.2 PIPE PENETRATION DETAIL

NOT TO SCALE

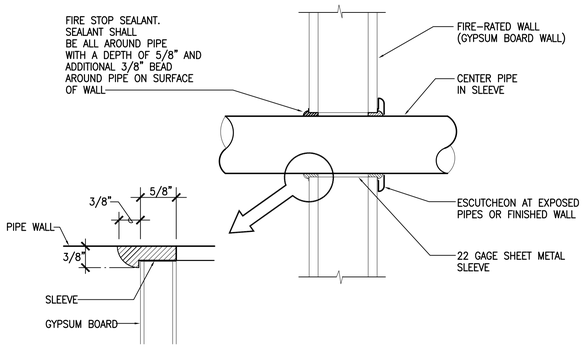

NOTE: APPLICABLE TO ALL INTERIOR GYP BD WALLS WITHIN UNITS AND BETWEEN UNITS.

2 FS3.2 FIRE SPRINKLER PIPE PENETRATION DETAIL

NTS

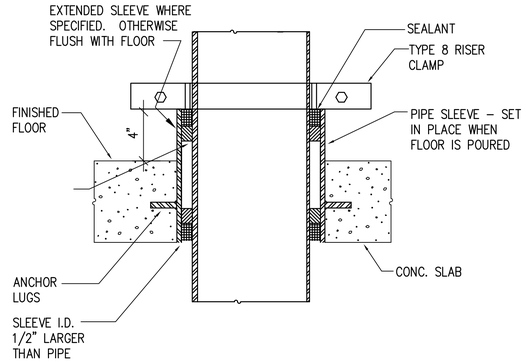

3 FS3.2 PIPE THRU FLOOR DETAIL

NOT TO SCALE

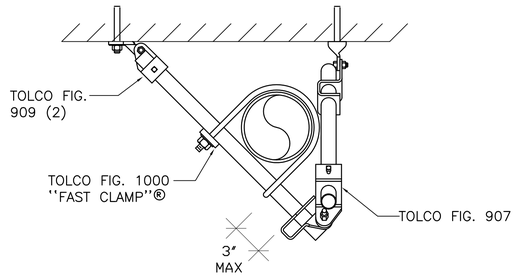

4 FS3.2 4-WAY SWAY BRACE DETAIL

NOT TO SCALE LAT/LONG EARTHQUAKE BRACE

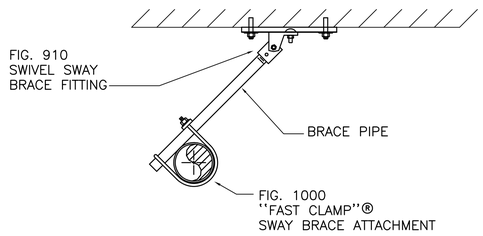

5 FS3.2 LATERAL SWAY BRACE DETAIL

NOT TO SCALE LATERAL EARTHQUAKE BRACE

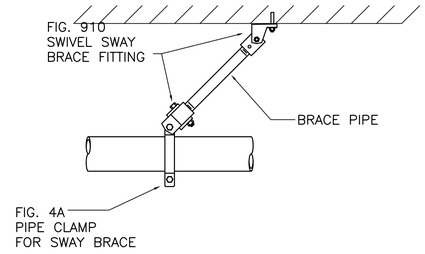

6 FS3.2 LONGITUDINAL SWAY BRACE DETAIL

NOT TO SCALE LONGITUDINAL EARTHQUAKE BRACE

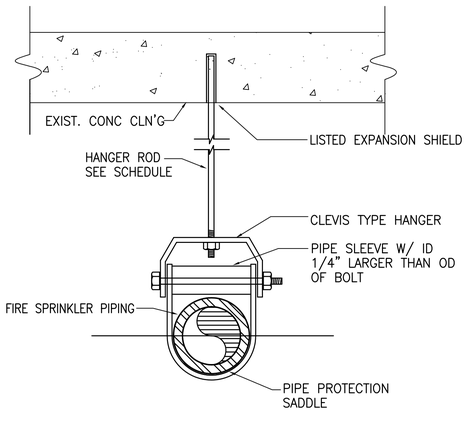

PIPE SIZE	NOMINAL ROD DIAMETER
	A
3/4" – 4"	3/8"
5" – 8"	1/2"
10" – 12"	5/8"

7 FS3.2 FIRE SPRINKLER PIPE SUPPORT DETAIL

NOT TO SCALE

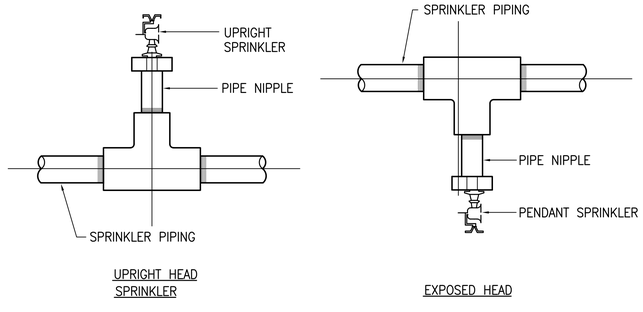

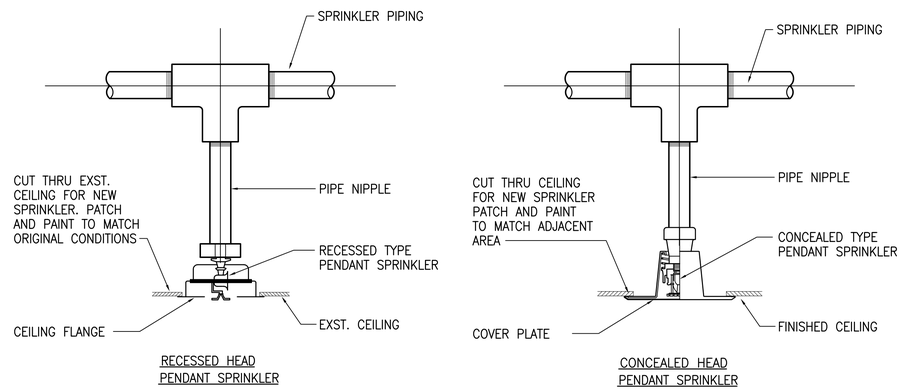

8 FS3.2 TYPCIAL SPRINKLER DETAILS

NOT TO SCALE

REVISIONS

NO.	DATE

THIS PROJECT WAS PREPARED BY ME OR UNDER MY SUPERVISION AND CONSTRUCTION OF THIS PROJECT WILL BE UNDER MY SUPERVISION.

ROSS S. OKUDA
LICENSED PROFESSIONAL ENGINEER
No. 9377-M
HAWAII, U.S.A.

Expiration Date: 4/30/2014

KAKAAKO WORKFORCE HOUSING PER
SUBCHAPTER 4 OF 2011 MAUKA PLAN AND RULES

801 SOUTH STREET
HONOLULU, HAWAII

FIRE SPRINKLER DETAILS

KAZU YATO, AIA & ASSOCIATES, INC.
2452 KEWAITTP TERRACE
HONOLULU, HI 96822
TEL: (808) 945-0040
FAX: (808) 945-0041

DATE	DATE	DRAWN	MEI	CHECK	KSO	FILE

SHEET

FS3.2

MECHANICAL NOTES:

1. CONFORM TO ALL REQUIREMENTS OF THE BUILDING, PLUMBING, AND ELECTRICAL CODES OF THE CITY AND COUNTY OF HONOLULU, STATE OF HAWAII HEALTH REGULATIONS, FIRE DEPARTMENT REGULATIONS, MANUFACTURER'S RECOMMENDATIONS AND OTHER APPLICABLE REGULATIONS.
2. EXAMINE ALL PROJECT PLANS AND BECOME FAMILIAR WITH ALL EXISTING CONDITIONS AND THE EXTENT OF REMOVAL, RELOCATION AND/OR NEW WORK PRIOR TO BIDDING. NOTIFY AND COORDINATE WITH THE ENGINEER FOR ANY MAJOR DEVIATIONS OR DISCREPANCIES DISCOVERED IN THE PLANS AND SPECIFICATIONS DUE TO UNFORESEEN OR VARYING FIELD CONDITIONS.
3. INSTALLATION SHALL BE GUARANTEED TO BE FREE FROM DEFECTS FOR ONE YEAR FROM FINAL DATE OF ACCEPTANCE OF THE PROJECT AS A WHOLE.
4. CONTRACTOR SHALL VERIFY ALL FIELD CONDITIONS PRIOR TO BID AND CONSTRUCTION.
5. THE DRAWINGS AND SPECIFICATIONS ARE INTENDED TO COVER THE COMPLETE INSTALLATION OF SYSTEMS TO FUNCTION AS DESCRIBED AND SPECIFIED. THE OMISSION OF REFERENCE TO ANY NECESSARY ITEM OF LABOR OR MATERIAL SHALL NOT RELIEVE THE CONTRACTOR FROM PROVIDING SUCH LABOR AND MATERIAL AT NO ADDITIONAL COST TO THE OWNER.
6. PAY FOR ALL PERMITS AND APPLICATIONS.
7. CAULK ALL PENETRATIONS WATERTIGHT. PROVIDE ALL CUTTING, PATCHING, AND RESTORING OF EXISTING SURFACES TO MATCH ORIGINAL SURFACE FINISHES. SPOT PAINT TO MATCH EXISTING SURFACES/COLOR.
8. PREPARE SIX (6) SETS OF SHOP DRAWINGS SUBMITTED TO THE ENGINEER FOR APPROVAL PRIOR TO THE START OF WORK. NO REPRODUCTIONS OF ANY KIND OF THE CONTRACT DOCUMENTS SHALL BE ACCEPTABLE AS SHOP DRAWINGS. PROVIDE ONE SET OF REPRODUCIBLE AS-BUILT DRAWINGS SHOWING THE ACTUAL INSTALLED CONDITIONS AND SUBMIT TO THE OWNERS UPON COMPLETION OF WORK.
9. ALL EQUIPMENT AND FIXTURES SHALL BE CAPABLE OF FITTING INTO THE SPACES ALLOTTED WHILE MEETING THE MANUFACTURER'S RECOMMENDED ACCESS REQUIREMENTS. REVIEW ALL SPACES WHERE EQUIPMENT AND FIXTURES ARE TO BE INSTALLED PRIOR TO ORDERING OF ITEMS AND NOTIFY THE ARCHITECT/ENGINEER OF ANY INADEQUATE CLEARANCES OR CONDITIONS THAT WILL PREVENT THE PROPER INSTALLATION, MAINTENANCE, AND OPERATION OF THE EQUIPMENT AND FIXTURES.
10. DRAWINGS ARE DIAGRAMMATIC IN NATURE AND DO NOT SHOW EVERY EXACT DETAIL OF PIPING AND DUCTWORK. PROVIDE OFFSETS AS NECESSARY TO AVOID LOCAL OBSTRUCTIONS OR INTERFERENCES WITH OTHER TRADES. REVIEW ALL PIPING AND DUCT RUNS PRIOR TO FABRICATION AND IMMEDIATELY NOTIFY THE ARCHITECT/ENGINEER OF ANY INTERFERENCES AND/OR LACK OF ADEQUATE CLEARANCES.
11. SHOULD PROJECT CONDITIONS REQUIRE REARRANGEMENT OF WORK, MARK SUCH CHANGES ON THE AS-BUILT DRAWINGS. IF THESE CHANGES REQUIRE ALTERNATE METHODS TO THOSE APPROVED BY THE CONTRACT DOCUMENTS, SUBMIT SHOP DRAWINGS SHOWING THE PROPOSED ALTERNATE METHODS TO THE ARCHITECT/ENGINEER FOR REVIEW/APPROVAL PRIOR TO PROCEEDING WITH WORK.
12. COORDINATE ALL WORK WITH THE BUILDING SUPERVISOR. SCHEDULE OFF-HOUR WORK WHEN REQUIRED TO MINIMIZE DISRUPTIONS.
13. COORDINATE ALL SWITCH, THERMOSTAT, FIRE EXTINGUISHER, ETC. LOCATIONS WITH USER/ENGINEER PRIOR TO INSTALLATION TO AVOID INTERFERENCES WITH PAINTING, BULLETIN BOARDS, FURNITURE, ETC. ANY ITEM NOT PROPERLY COORDINATED SHALL BE RELOCATED AT NO ADDITIONAL COST TO THE OWNER.
14. ALL DUCT DIMENSIONS SHOWN ARE NET DIMENSIONS.
15. PROVIDE DUCTWORK TRANSITION FITTINGS AT AIR DEVICE CONNECTIONS AS REQUIRED.
16. PROVIDE OPPOSED BLADE VOLUME DAMPERS AND STAINLESS STEEL BIRDSCREENS FOR ALL OUTSIDE AIR DUCTS.
17. ALL SWITCHES, TIMECLOCKS, THERMOSTATS, AND CONTROL ITEMS SHALL BE ADA ACCESSIBLE AND SHALL BE MOUNTED AT 44" ABOVE THE FINISHED FLOOR PER ADAAG REQUIREMENTS OR ACCORDING TO OWNER'S INSTRUCTIONS.
18. PROVIDE REBALANCING DURING ONE YEAR GUARANTEE PERIOD TO SATISFY USER'S REQUIREMENTS. CONTRACTOR SHALL PROVIDE TEST AND BALANCING REPORTS.
19. COORDINATE ALL WORK WITH OTHER TRADES TO AVOID INTERFERENCES AND DELAYS.
20. REPAIR ANY DAMAGE TO EXISTING CONSTRUCTION RESULTING FROM THE INSTALLATION OF MECHANICAL ITEMS. THE AREAS REPAIRED SHALL MATCH THE ADJACENT SURFACES IN COLOR AND TEXTURE.
21. SEISMICALLY BRACE ALL EQUIPMENT, PIPING, AND DUCTWORK IN ACCORDANCE WITH CURRENT BUILDING CODES AND THEIR RESPECTIVE SEISMIC ZONE LOCATIONS.
22. PROVIDE DIELECTRIC UNIONS OR SEPARATIONS AT ALL DISSIMILAR METALS. PROVIDE UNIONS AFTER ALL SHUTOFF VALVES.
23. PROVIDE ACCESS PANELS FOR ALL ITEMS UNDER THIS SECTION REQUIRING SERVICING, INSPECTION, MAINTENANCE, AND ADJUSTMENT.
24. PROVIDE ESCUTCHEON PLATES AT ALL EXPOSED WALL PENETRATIONS IN FINISHED AREAS, EXTERIOR WALL, ETC.
25. ALL PENETRATIONS THRU EXISTING WALLS, FOUNDATIONS, AND FLOOR SLABS SHALL BE IN TOTAL COMPLIANCE WITH ARCHITECTURAL/STRUCTURAL PROCEDURES AND DRAWINGS.
26. ALL PENETRATIONS THRU RATED WALLS AND CEILINGS SHALL BE EQUIPPED WITH APPROVED FIRE STOPPING AND OR FIRE AND SMOKE DAMPERS.
27. DRAWING FILES WILL NOT BE AVAILABLE TO CONTRACTORS FOR SHOP DRAWINGS OR ANY OTHER PURPOSE.
28. PROVIDE ISOLATION VALVES ON PIPING BRANCH LINES AND VOLUME DAMPERS ON DUCTWORK BRANCH LINES WHETHER SHOWN ON THE DRAWINGS OR NOT.
29. PATCH AND PAINT ALL EXPOSED MATERIAL TO MATCH ADJACENT SURFACES OR AS INDICATED.

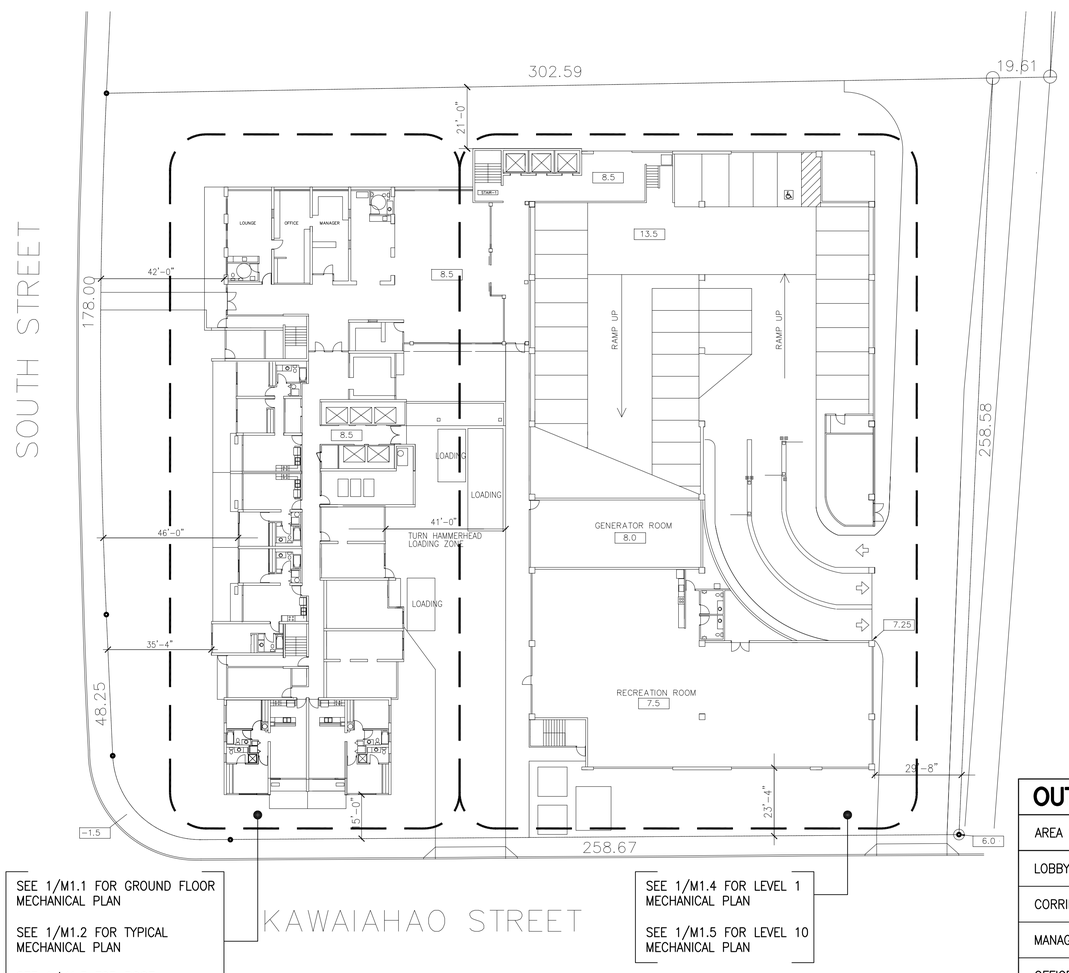

SEE 1/M1.1 FOR GROUND FLOOR MECHANICAL PLAN

SEE 1/M1.2 FOR TYPICAL MECHANICAL PLAN

SEE 1/M1.3 FOR ROOF MECHANICAL PLAN

SEE 1/M1.4 FOR LEVEL 1 MECHANICAL PLAN

SEE 1/M1.5 FOR LEVEL 10 MECHANICAL PLAN

1 / M0.1 **MECHANICAL SITE PLAN**
NOT TO SCALE

NORTH

MECHANICAL LEGEND

SYMBOL	ABBRV	DESCRIPTION
	ACCU	AIR COOLED CONDENSING UNIT
AP	AP	ACCESS PANEL
	CD	CONDENSATE DRAIN
	CFM	CUBIC FEET PER MINUTE
ø	DIA	DIAMETER
	DN	DOWN
	DT	DUCT
	EAL	EXHAUST AIR LOUVER
	EAR	EXHAUST AIR REGISTER
	EF	EXHAUST FAN
	EXH	EXHAUST
	FCU	FAN COIL UNIT
	OA	OUTSIDE AIR
	OAL	OUTSIDE AIR LOUVER
	OAR	OUTSIDE AIR REGISTER
	OBVD	OPPOSED BLADE VOLUME DAMPER
	PRV	POWER ROOF VENTILATOR
	RAR	RETURN AIR REGISTER
RL	RL	REFRIGERANT LIQUID LINE
RS	RS	REFRIGERANT SUCTION LINE
	SAD	SUPPLY AIR DIFFUSER
	SAR	SUPPLY AIR REGISTER
SD	SD	DUCT SMOKE DETECTOR
	SF	SUPPLY FAN
	SPF	STAIRWELL PRESSURIZATION FAN
	TR GR	TRANSFER GRILLE
T	TSTAT	THERMOSTAT
	TYP	TYPICAL

ENERGY CODE COMPLIANCE

CITY AND COUNTY OF HONOLULU
REVISED ORDINANCE CHAPTER 32
HONOLULU COUNTY CODE 1990, AS AMENDED

TO THE BEST OF MY KNOWLEDGE, THIS PROJECT'S DESIGN SUBSTANTIALLY CONFORMS TO THE BUILDING ENERGY CONSERVATION CODE FOR:

✓ MECHANICAL COMPONENT SYSTEMS

SIGNATURE: R.C. Okuda
NAME: ROSS S. OKUDA
TITLE: PRESIDENT
PE #: 9377-M

ROSS S. OKUDA LICENSED PROFESSIONAL ENGINEER No. 9377-M HAWAII, U.S.A.
EXP. 4-30-2014

OUTSIDE AIR CALCS

AREA SERVED	OCCUPANCY	CFM PER PERSON	NO. OF PEOPLE	AREA OUTDOOR AIR RATE	AREA (SF)	OA REQUIRED (CFM)
LOBBY	LOBBY	5	15	0.06	2,239	209
CORRIDOR	CORRIDOR	0	0	0.06	600	36
MANAGER	OFFICE SPACE	5	4	0.06	360	42
OFFICE	OFFICE SPACE	5	4	0.06	382	43
LOUNGE	BREAK ROOM	5	10	0.06	383	73
SECURITY	OFFICE SPACE	5	2	0.06	393	21
MAIL	STORAGE	0	0	0.12	187	32
RECREATION	MULTI-USE ASSEMBLY	5	200	0.06	6,017	1,361

REVISIONS | NO. | DATE

ROSS S. OKUDA LICENSED PROFESSIONAL ENGINEER No. 9377-M HAWAII, U.S.A.
Expiration Date: 4/30/2014

THIS PROJECT WAS PREPARED BY ME OR UNDER MY SUPERVISION AND CONSTRUCTION OF THIS PROJECT WILL BE UNDER MY SUPERVISION.

KAKAAKO WORKFORCE HOUSING PER SUBCHAPTER 4 OF 2011 MAUKA PLAN AND RULES
801 SOUTH STREET
HONOLULU, HAWAII

MECHANICAL NOTES, LEGEND, CALCS, SITE PLAN

KAZU YATO, AIA & ASSOCIATES, INC.
2323 ROUNDTOP TERRACE
HONOLULU, HI 96822
TEL: (808) 945-0040
FAX: (808) 945-0041

DATE	DRAWN	CHECK	FILE
DATE	MEI	RSO	

SHEET
M0.1

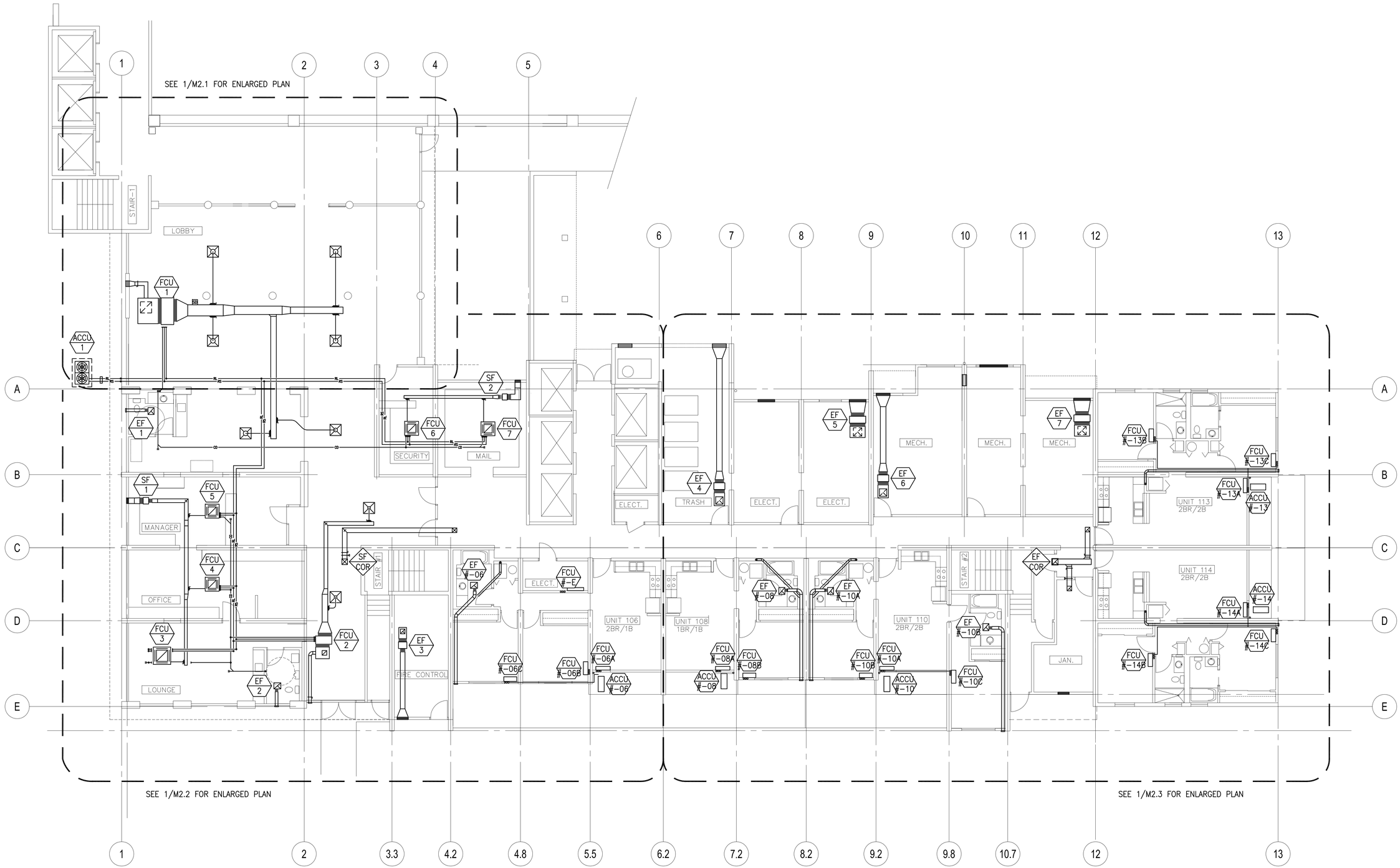

1 / M1.1 **TOWER - GROUND FLOOR MECHANICAL PLAN**
SCALE: 1/8" = 1'-0"

0 8' 16' 24'
SCALE: 1/8"=1'-0"

NORTH

REVISIONS

NO.	DATE

ROSS S. OKUDA
LICENSED PROFESSIONAL ENGINEER
No. 9377-M
HAWAII, U.S.A.
Expiration Date: 4/30/2014

THIS PROJECT WAS PREPARED BY ME OR UNDER MY SUPERVISION AND CONSTRUCTION OF THIS PROJECT WILL BE UNDER MY SUPERVISION.

KAKAAKO WORKFORCE HOUSING PER
SUBCHAPTER 4 OF 2011 MAUKA PLAN AND RULES
801 SOUTH STREET
HONOLULU, HAWAII

TOWER - GROUND FLOOR MECHANICAL PLAN

KAZU YATO, AIA & ASSOCIATES, INC.
2033 ROUNDTOP TERRACE
HONOLULU, HI 96822
TEL: (808) 945-0040
FAX: (808) 945-0041

DATE	DATE
DRAWN	MEI
CHECK	RSO
FILE	

SHEET

M1.1

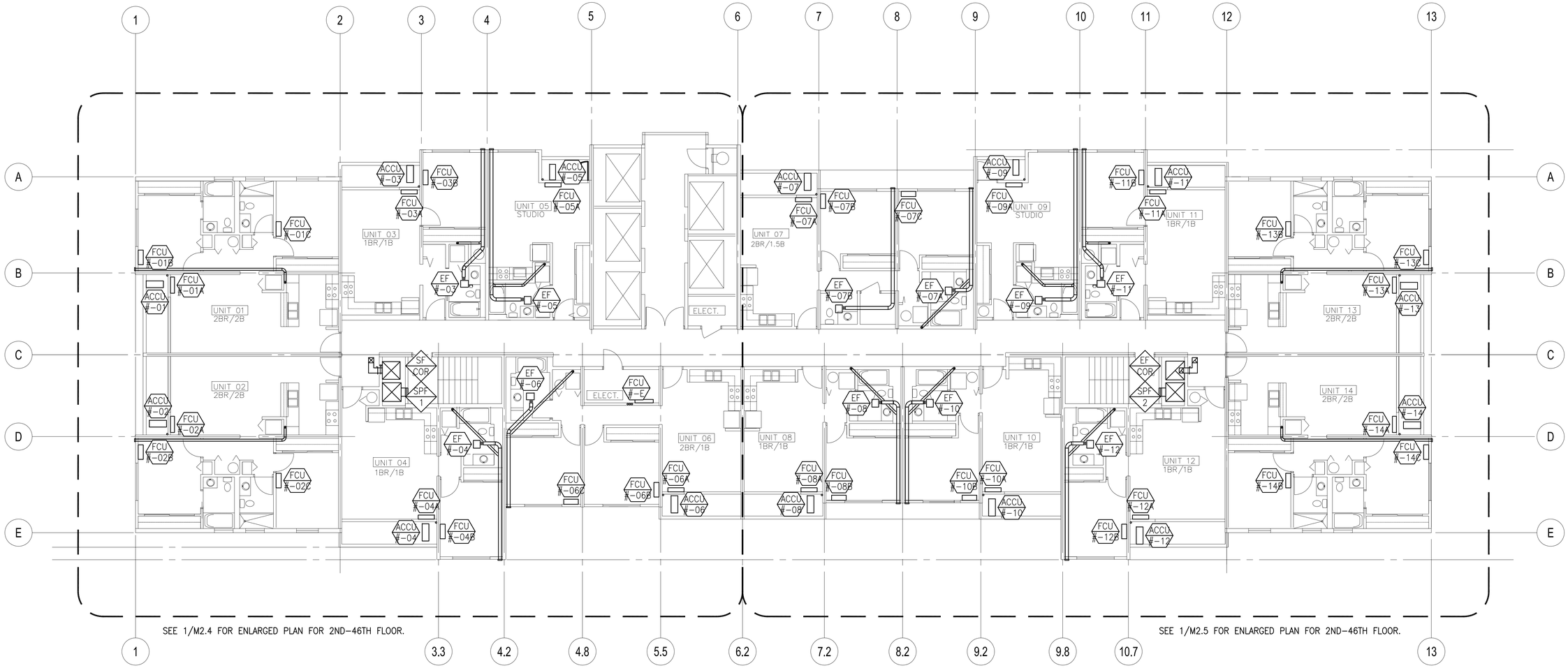

1 / M1.2 **TOWER - TYPICAL MECHANICAL PLAN**

SCALE: 1/8" = 1'-0" 2ND – 46TH FLR

0 8' 16' 24'

SCALE: 1/8"=1'-0"

NORTH

NO.	DATE	REVISIONS

ROSS S. OKUDA
LICENSED PROFESSIONAL ENGINEER
No. 9377-M
HAWAII, U.S.A.

Expiration Date: 4/30/2014

THIS PROJECT WAS PREPARED BY ME OR UNDER MY SUPERVISION AND CONSTRUCTION OF THIS PROJECT WILL BE UNDER MY SUPERVISION.

KAKAAKO WORKFORCE HOUSING PER SUBCHAPTER 4 OF 2011 MAUKA PLAN AND RULES

801 SOUTH STREET
HONOLULU, HAWAII

TOWER - TYPICAL MECHANICAL PLAN, 2ND - 46TH FLOOR

KAZU YATO, AIA & ASSOCIATES, INC.
2053 KOMOHANA STREET
HONOLULU, HI 96819
TEL: (808) 945-0040
FAX: (808) 945-0041

DATE	DATE	DRAWN	MEI	CHECK	KSO	FILE

SHEET

M1.2

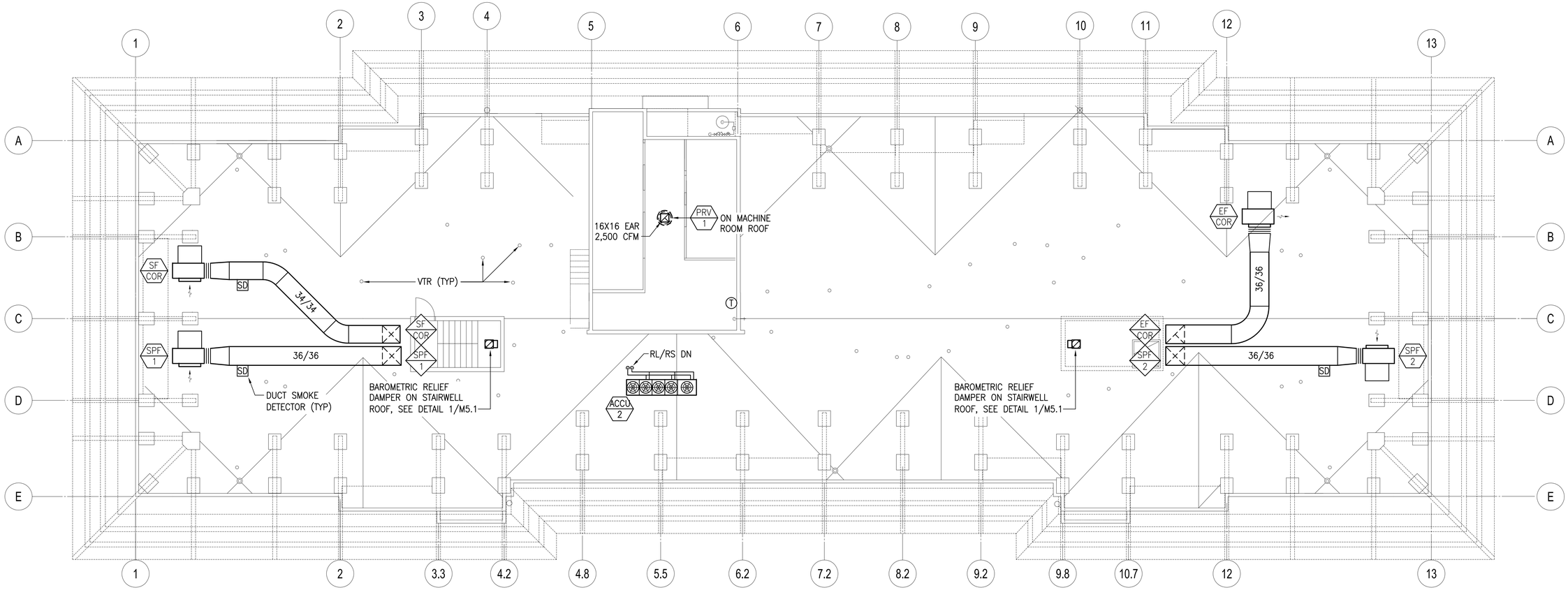

1 / M1.3 **TOWER - MECHANICAL ROOF PLAN**
SCALE: 1/8" = 1'-0"

0 8' 16' 24'
SCALE: 1/8"=1'-0"

NORTH

REVISIONS

NO.	DATE

ROSS S. OKUDA
LICENSED PROFESSIONAL ENGINEER
No. 9377-M
HAWAII, U.S.A.
Expiration Date: 4/30/2014

THIS PROJECT WAS PREPARED BY ME OR UNDER MY SUPERVISION AND CONSTRUCTION OF THIS PROJECT WILL BE UNDER MY SUPERVISION.

KAKAAKO WORKFORCE HOUSING PER
SUBCHAPTER 4 OF 2011 MAUKA PLAN AND RULES
801 SOUTH STREET
HONOLULU, HAWAII

TOWER - MECHANICAL ROOF PLAN

KAZU YATO, AIA & ASSOCIATES, INC.
2033 ROUNDTOP TERRACE
HONOLULU, HI 96822
TEL: (808) 945-0040
FAX: (808) 945-0041

DATE
DATE
DRAWN MEI
CHECK RSD
FILE

SHEET
M1.3

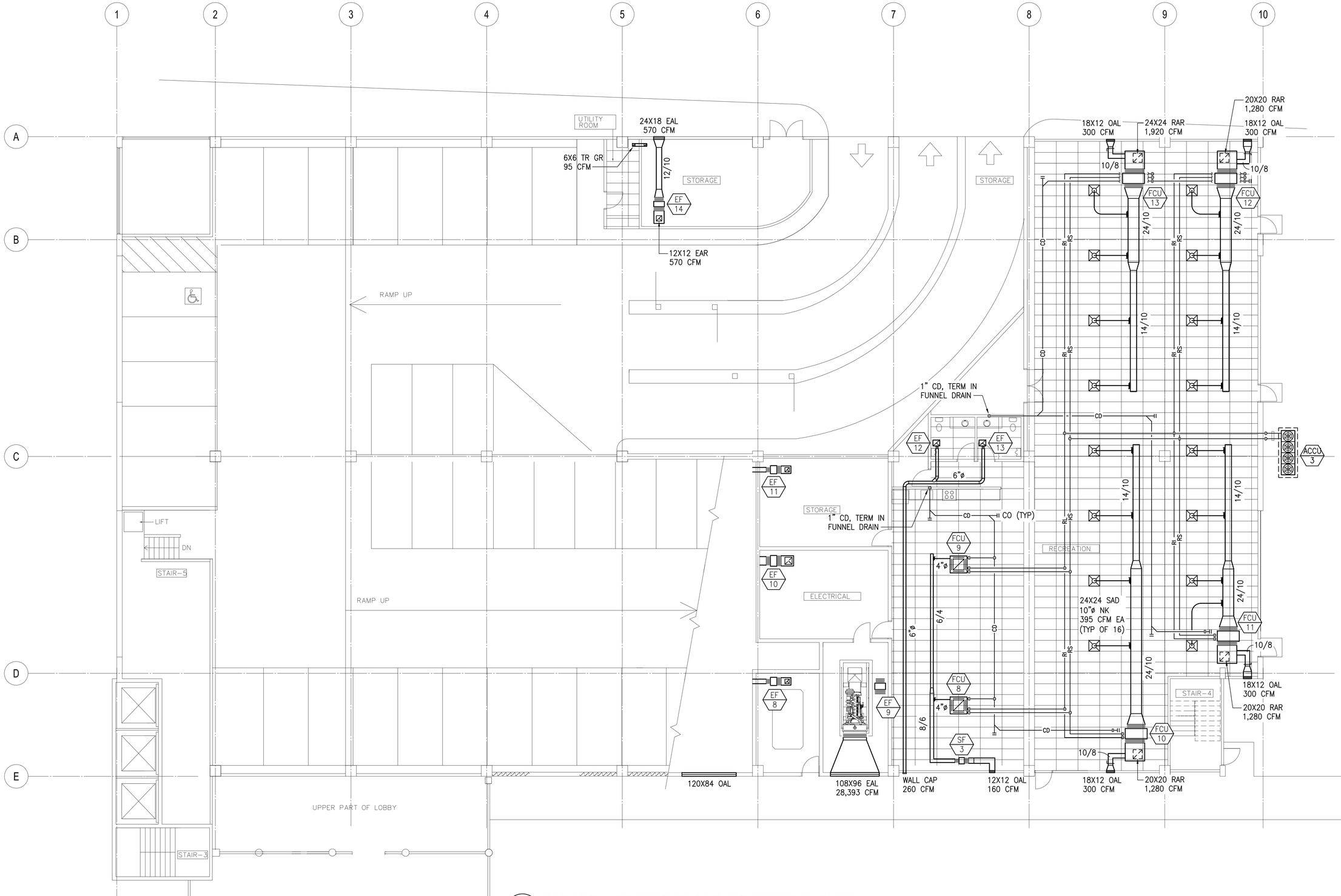

1 / M1.4 **GARAGE - GROUND FLOOR MECHANICAL PLAN**
SCALE: 1/8" = 1'-0"

0 8' 16' 24'
SCALE: 1/8"=1'-0"

NORTH

NO.	DATE	REVISIONS

ROSS S. OKUDA
LICENSED PROFESSIONAL ENGINEER
No. 9377-M
HAWAII, U.S.A.
Expiration Date: 4/30/2014

THIS PROJECT WAS PREPARED BY ME OR UNDER MY SUPERVISION AND CONSTRUCTION OF THIS PROJECT WILL BE UNDER MY SUPERVISION.

KAKAAKO WORKFORCE HOUSING PER
SUBCHAPTER 4 OF 2011 MAUKA PLAN AND RULES
801 SOUTH STREET
HONOLULU, HAWAII

GARAGE - GROUND FLOOR MECHANICAL PLAN

KAZU YATO, AIA & ASSOCIATES, INC.
2452 KEWAITTP TERRACE
HONOLULU, HI 96822
TEL: (808) 945-0040
FAX: (808) 945-0041

DATE	DATE	DRAWN	MEI	CHECK	RSO	FILE

SHEET
M1.4

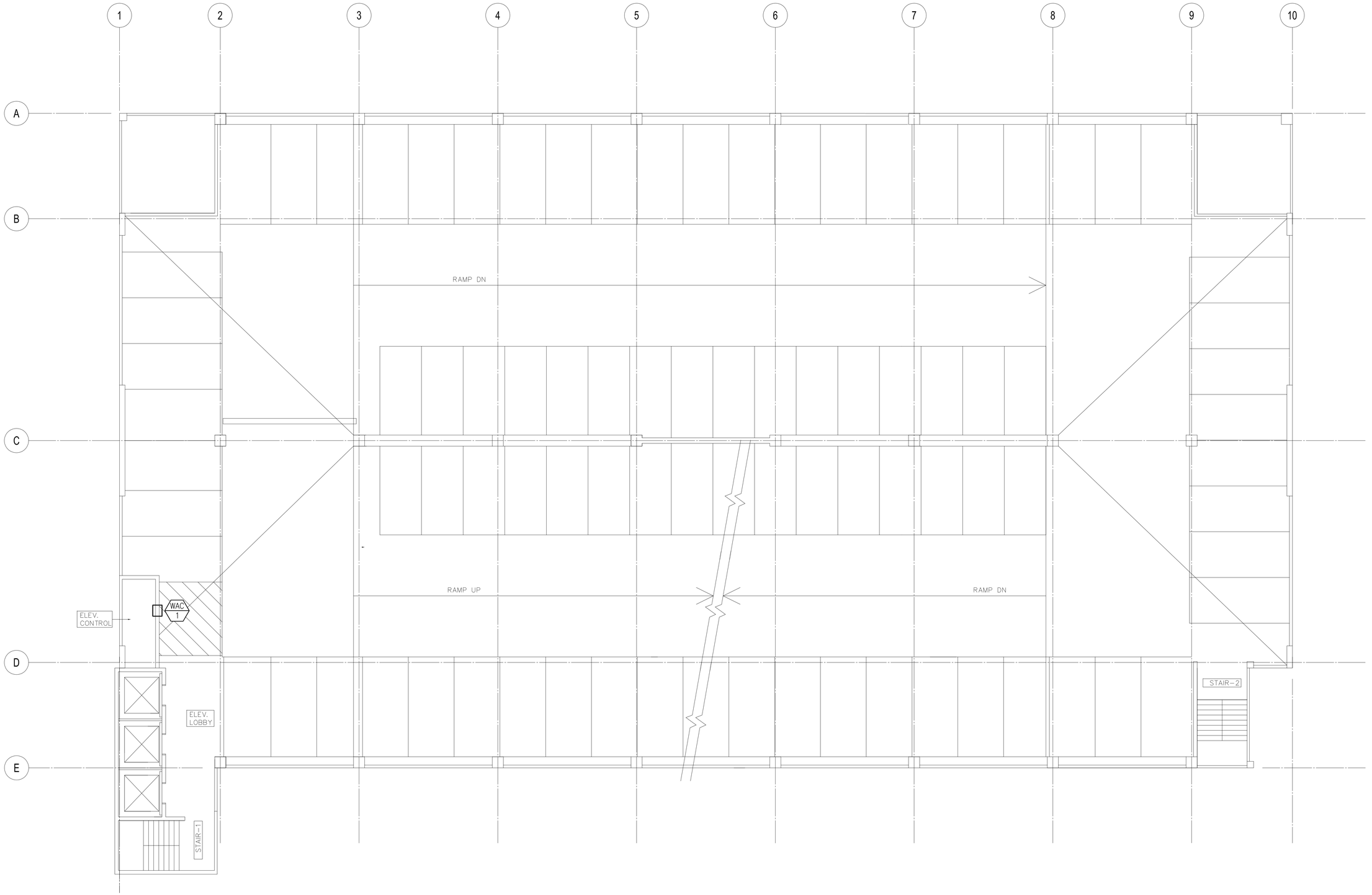

1 / M1.5 **GARAGE - LEVEL 10 MECHANICAL PLAN**
SCALE: 1/8" = 1'-0"

0 8' 16' 24'
SCALE: 1/8"=1'-0"

NORTH

NO.	DATE	REVISIONS

ROSS S. OKUDA
LICENSED PROFESSIONAL ENGINEER
No. 9377-M
HAWAII, U.S.A.
Expiration Date: 4/30/2014

THIS PROJECT WAS PREPARED BY ME OR UNDER MY SUPERVISION AND CONSTRUCTION OF THIS PROJECT WILL BE UNDER MY SUPERVISION.

KAZU YATO, AIA & ASSOCIATES, INC.
2053 KOHAITOP STORAGE
HONOLULU HI 96822
TEL: (808) 945-0040
FAX: (808) 945-0041

KAKAAKO WORKFORCE HOUSING PER
SUBCHAPTER 4 OF 2011 MAUKA PLAN AND RULES
801 SOUTH STREET
HONOLULU, HAWAII

GARAGE - LEVEL 10 MECHANICAL PLAN

DATE	DATE	DRAWN	CHECK	FILE
		MEI	KSO	

SHEET

M1.5

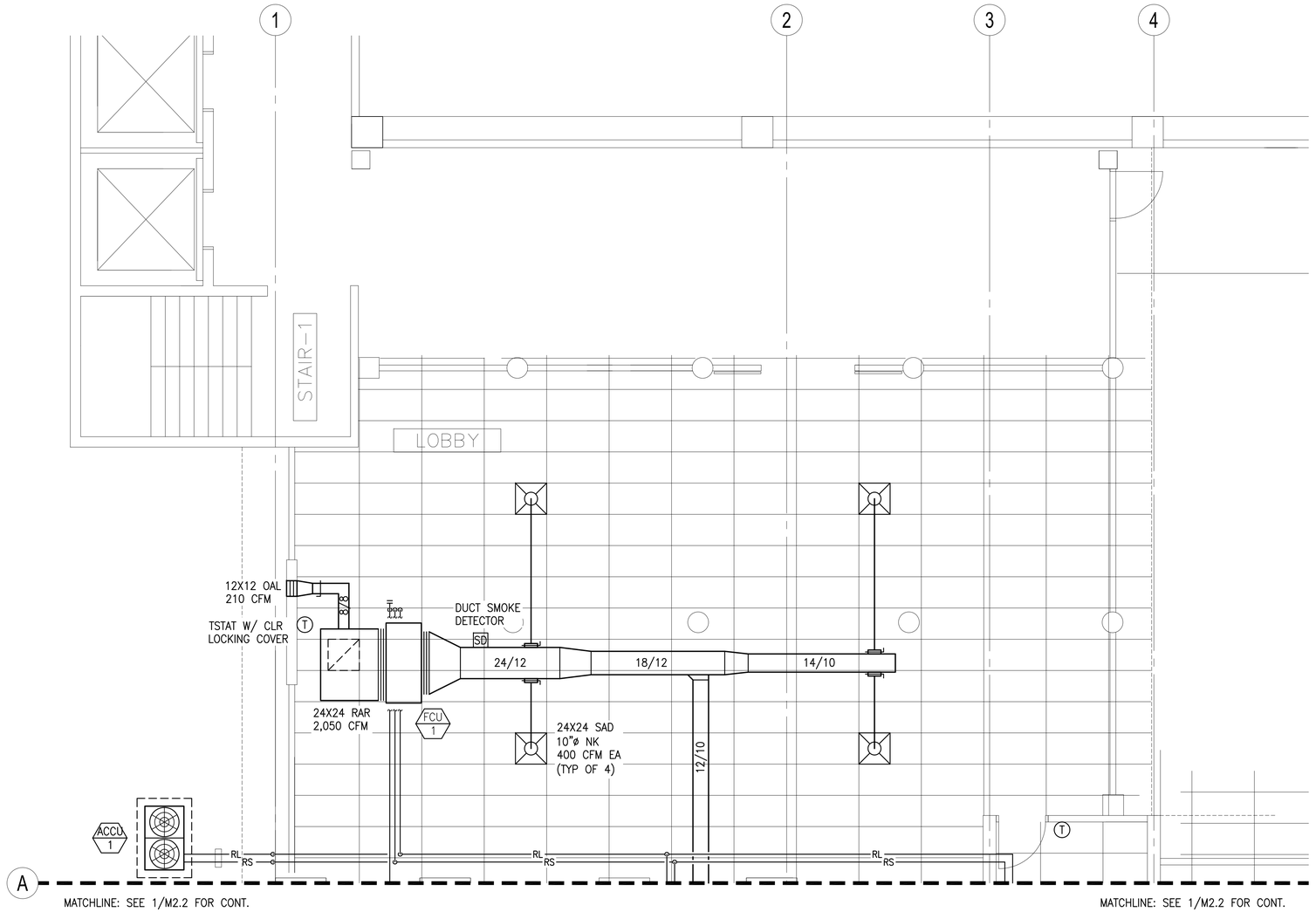

1 / M2.1 **TOWER - ENLARGED MECHANICAL PLAN**
SCALE: 1/4" = 1'-0" GROUND FLOOR

0 2' 4' 6' 8' 10' 12'
SCALE: 1/4" = 1'

NORTH

NO.	DATE	REVISIONS

ROSS S. OKUDA
LICENSED PROFESSIONAL ENGINEER
No. 9377-M
HAWAII, U.S.A.
Expiration Date: 4/30/2014

THIS PROJECT WAS PREPARED BY ME OR UNDER MY SUPERVISION AND CONSTRUCTION OF THIS PROJECT WILL BE UNDER MY SUPERVISION.

KAKAAKO WORKFORCE HOUSING PER
SUBCHAPTER 4 OF 2011 MAUKA PLAN AND RULES
801 SOUTH STREET
HONOLULU, HAWAII

TOWER - ENLARGED MECHANICAL PLAN, GROUND FLOOR

KAZU YATO, AIA & ASSOCIATES,INC.
2222 KALAKAUA AVENUE
HONOLULU, HI 96822
TEL: (808) 945-2040
FAX: (808) 945-2041

DATE	DRAWN	CHECK	FILE
DATE	MEI	RSO	

SHEET
M2.1

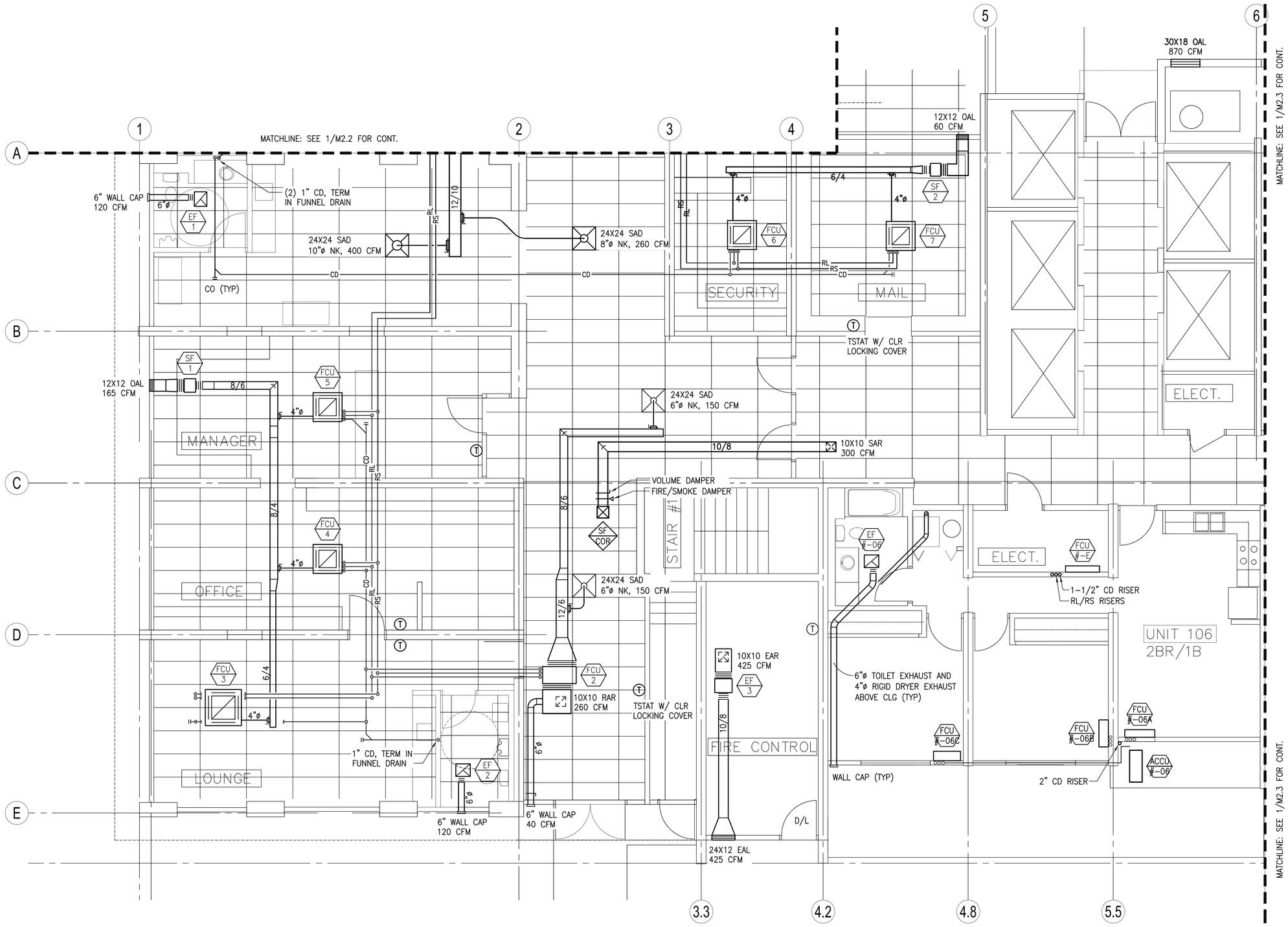

1 M2.2 **TOWER - ENLARGED MECHANICAL PLAN**
SCALE: 1/4" = 1'-0" GROUND FLOOR

0 2' 4' 6' 8' 10' 12'
SCALE: 1/4" = 1'

NORTH

REVISIONS

NO.	DATE

ROSS S. OKUDA
LICENSED PROFESSIONAL ENGINEER
No. 9377-M
HAWAII, U.S.A.
Expiration Date: 4/30/2014

THIS PROJECT WAS PREPARED BY ME OR UNDER MY SUPERVISION AND CONSTRUCTION OF THIS PROJECT WILL BE UNDER MY SUPERVISION.

KAKAAKO WORKFORCE HOUSING PER
SUBCHAPTER 4 OF 2011 MAUKA PLAN AND RULES
801 SOUTH STREET
HONOLULU, HAWAII

TOWER - ENLARGED MECHANICAL PLAN, GROUND FLOOR

KAZU YATO, AIA & ASSOCIATES, INC.
2033 ROUNDTOP TERRACE
HONOLULU, HI 96822
TEL: (808) 945-0040
FAX: (808) 945-0041

DATE
DATE
DRAWN
MEI
CHECK
RSO
FILE

SHEET
M2.2

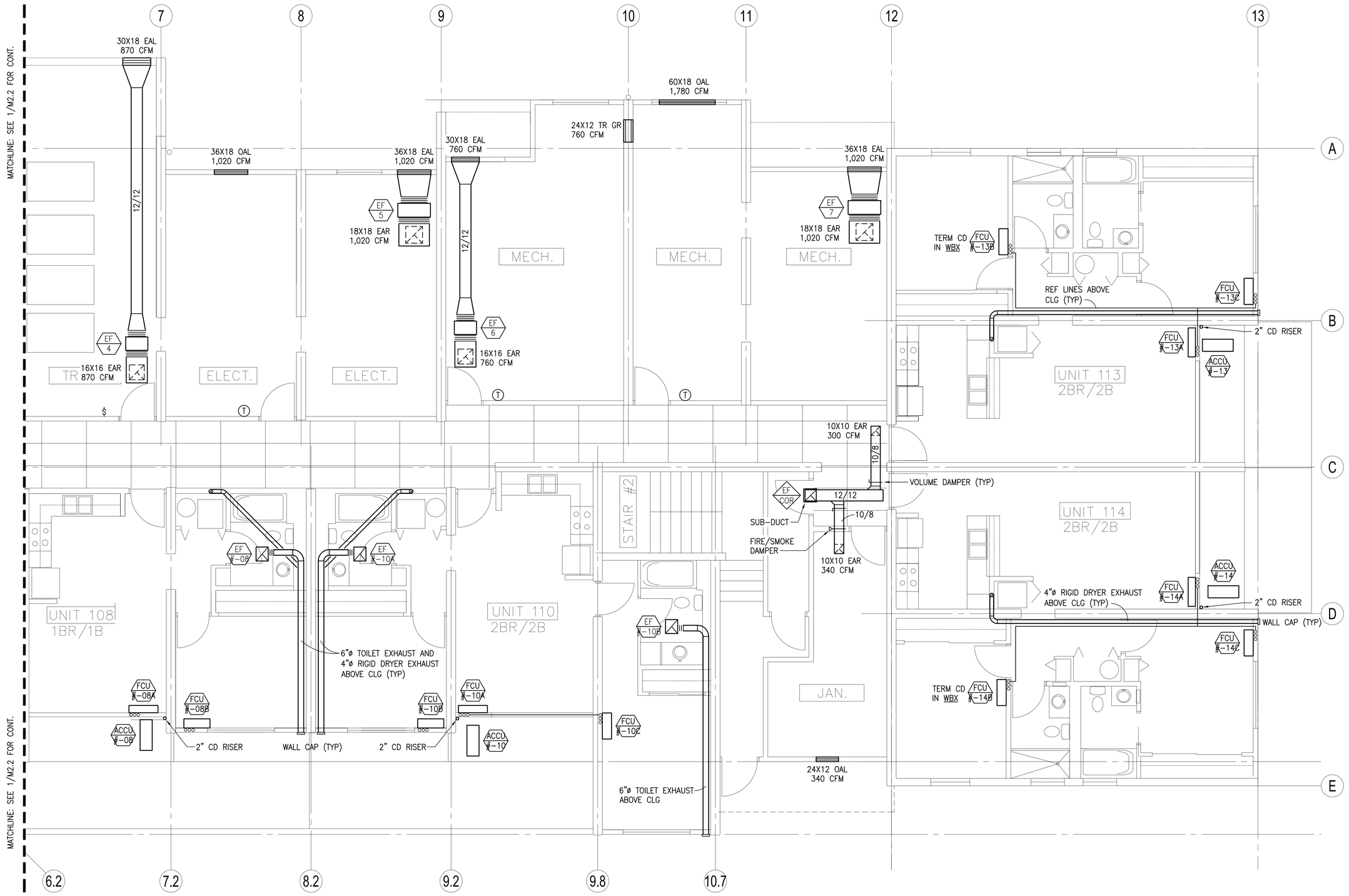

1 M2.3 **TOWER - ENLARGED MECHANICAL PLAN**
SCALE: 1/4" = 1'-0"
GROUND FLOOR

0 2' 4' 6' 8' 10' 12'
SCALE: 1/4" = 1'

NORTH

REVISIONS

NO.	DATE

ROSS S. OKUDA
LICENSED PROFESSIONAL ENGINEER
No. 9377-M
HAWAII, U.S.A.
Expiration Date: 4/30/2014

THIS PROJECT WAS PREPARED BY ME OR UNDER MY SUPERVISION AND CONSTRUCTION OF THIS PROJECT WILL BE UNDER MY SUPERVISION.

KAKAAKO WORKFORCE HOUSING PER
SUBCHAPTER 4 OF 2011 MAUKA PLAN AND RULES
801 SOUTH STREET
HONOLULU, HAWAII

TOWER - ENLARGED MECHANICAL PLAN, GROUND FLOOR

KAZU YATO, AIA & ASSOCIATES, INC.
2033 ROUNDTOP TERRACE
HONOLULU, HI 96822
TEL: (808) 945-0040
FAX: (808) 945-0041

DATE
DATE
DRAWN
MEI
CHECK
RSD
FILE

SHEET
M2.3

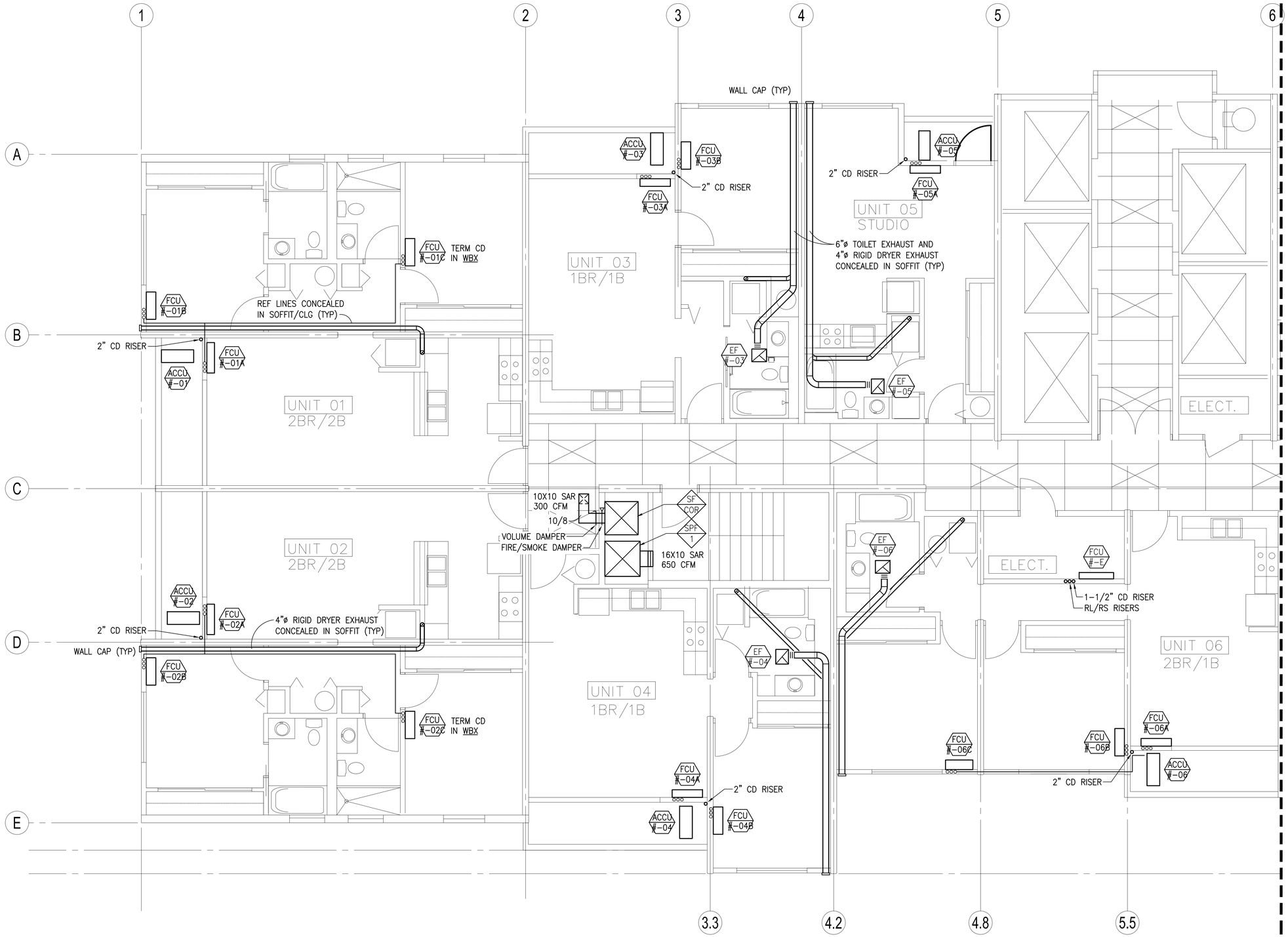

1 / M2.4 **TOWER - TYPICAL ENLARGED MECHANICAL PLAN**
SCALE: 1/4" = 1'-0" 2ND – 46TH FLR

NO.	DATE	REVISIONS

S. OKUDA
LICENSED PROFESSIONAL ENGINEER
No. 9377-M
HAWAII, U.S.A.
Expiration Date: 4/30/2014

THIS PROJECT WAS PREPARED BY ME OR UNDER MY SUPERVISION AND CONSTRUCTION OF THIS PROJECT WILL BE UNDER MY SUPERVISION.

KAZU YATO, AIA & ASSOCIATES, INC.
2222 KALAKAUA AVENUE
HONOLULU, HI 96822
TEL: (808) 945-0049
FAX: (808) 945-0041

KAKAAKO WORKFORCE HOUSING PER SUBCHAPTER 4 OF 2011 MAUKA PLAN AND RULES
801 SOUTH STREET
HONOLULU, HAWAII

TOWER - TYP ENLARGED MECHANICAL PLAN, 2ND - 46TH FLOOR

DATE	DATE	MEI	RSO	FILE
	DRAWN	CHECK		

SHEET

M2.4

MATCHLINE: SEE 1/M2.4 FOR CONT.

7 8 9 10 11 12 13

A B C D E

UNIT 07
2BR/1.5B

UNIT 08
1BR/1B

UNIT 09
STUDIO

UNIT 10
1BR/1B

UNIT 11
1BR/1B

UNIT 12
1BR/1B

UNIT 13
2BR/2B

UNIT 14
2BR/2B

ACCU #-07
FCU #-07A
FCU #-07B
FCU #-07C
2" CD RISER
6"ø TOILET EXHAUST CONCEALED IN SOFFIT
EF #-07A
EF #-07B

ACCU #-08
FCU #-08A
FCU #-08B
2" CD RISER
EF #-08

ACCU #-09
FCU #-09A
2" CD RISER
6"ø TOILET EXHAUST AND 4"ø RIGID DRYER EXHAUST CONCEALED IN SOFFIT (TYP)
EF #-09

ACCU #-10
FCU #-10A
FCU #-10B
2" CD RISER
EF #-10

WALL CAP (TYP)
ACCU #-11
FCU #-11A
FCU #-11B
2" CD RISER
EF #-11

EF #-12
ACCU #-12
FCU #-12A
FCU #-12B
2" CD RISER

EF COR 2
EF SPF 2
10X10 EAR 300 CFM
10/8
VOLUME DAMPER SUB-DUCT
16X10 SAR 650 CFM

ACCU #-13
FCU #-13A
FCU #-13B
FCU #-13C
TERM CD IN WBX
REF LINES CONCEALED IN SOFFIT/CLG (TYP)
2" CD RISER

ACCU #-14
FCU #-14A
FCU #-14B
FCU #-14C
4"ø RIGID DRYER EXHAUST CONCEALED IN SOFFIT (TYP)
2" CD RISER
WALL CAP (TYP)
TERM CD IN WBX

MATCHLINE: SEE 1/M2.4 FOR CONT.

6.2 7.2 8.2 9.2 9.8 10.7

1 / M2.5 **TOWER - TYPICAL ENLARGED MECHANICAL PLAN**
SCALE: 1/4" = 1'-0" 2ND – 46TH FLR

0 2' 4' 6' 8' 10' 12'
SCALE: 1/4" = 1'

NORTH

REVISIONS

NO.	DATE

ROSS S. OKUDA
LICENSED PROFESSIONAL ENGINEER
No. 9377-M
HAWAII, U.S.A.

Expiration Date: 4/30/2014

THIS PROJECT WAS PREPARED BY ME OR UNDER MY SUPERVISION AND CONSTRUCTION OF THIS PROJECT WILL BE UNDER MY SUPERVISION.

KAKAAKO WORKFORCE HOUSING PER
SUBCHAPTER 4 OF 2011 MAUKA PLAN AND RULES
801 SOUTH STREET
HONOLULU, HAWAII

TOWER - TYP ENLARGED MECHANICAL PLAN, 2ND - 46TH FLOOR

KAZU YATO, AIA & ASSOCIATES, INC.
2833 KEALAKEKUA TERRACE
HONOLULU, HI 96822
TEL: (808) 945-0049
FAX: (808) 945-0941

DATE	DATE	MEI	KSO	FILE
	DRAWN	CHECK		

SHEET

M2.5

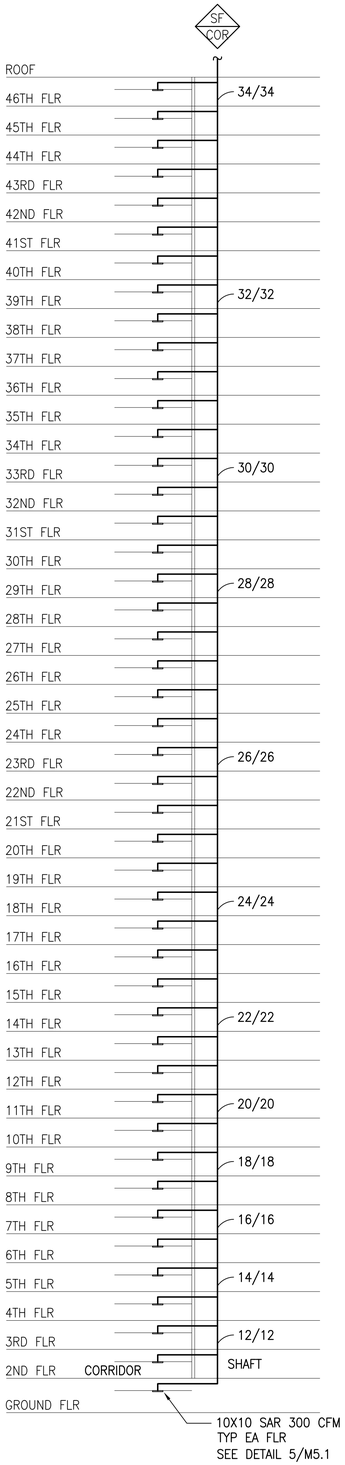

1 M3.1 **CORRIDOR SUPPLY RISER DIAGRAM**
NOT TO SCALE

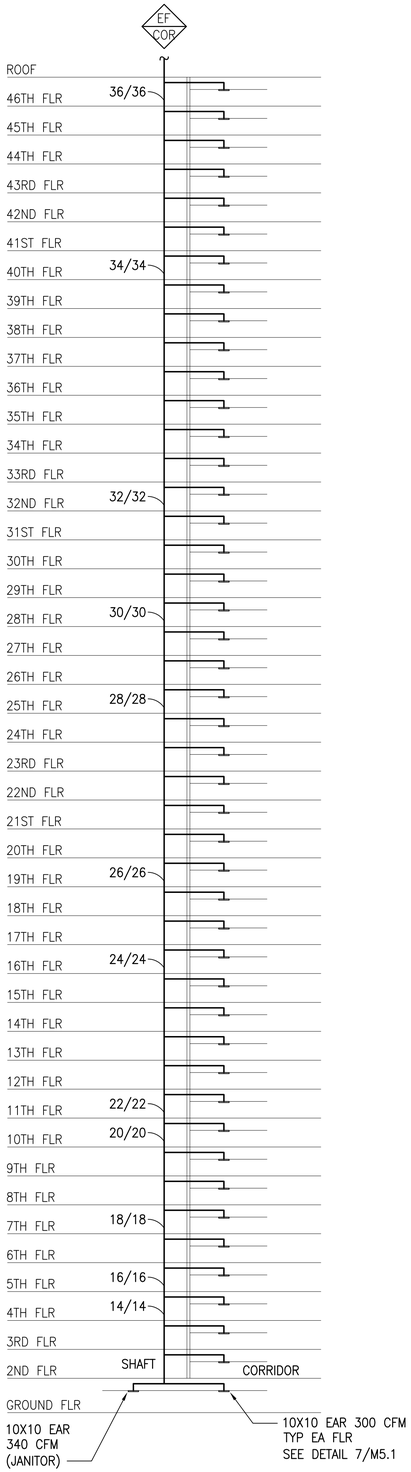

2 M3.1 **CORRIDOR EXHAUST RISER DIAGRAM**
NOT TO SCALE

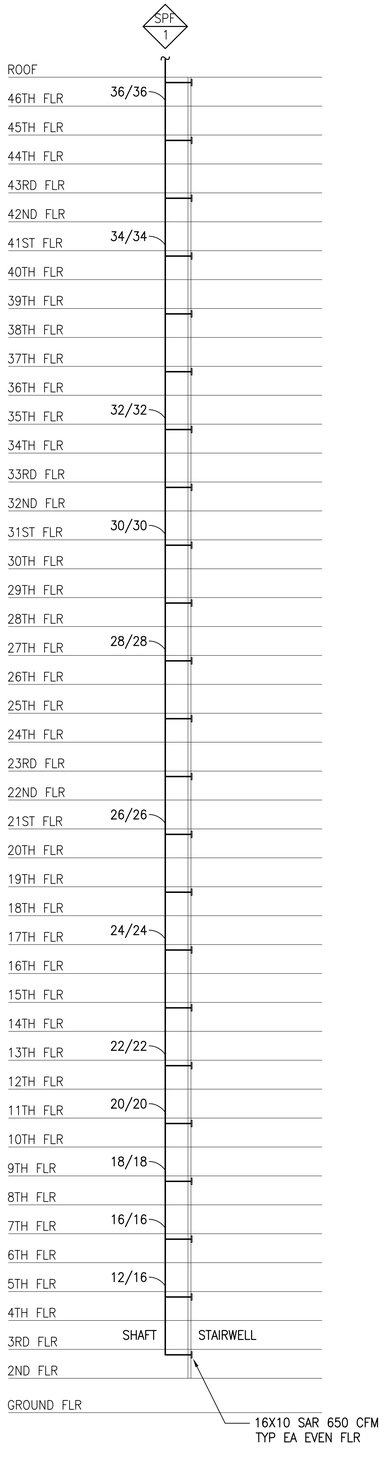

3 M3.1 **STAIRWELL 1 PRESSURIZATION RISER DIAGRAM**
NOT TO SCALE

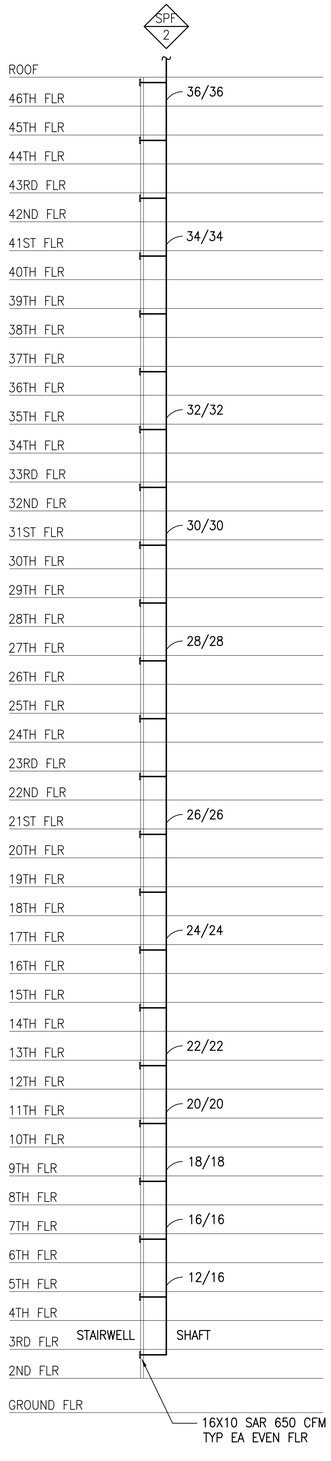

4 M3.1 **STAIRWELL 2 PRESSURIZATION RISER DIAGRAM**
NOT TO SCALE

NO.	DATE	REVISIONS

ROSS S. OKUDA
LICENSED PROFESSIONAL ENGINEER
No. 9377-M
HAWAII, U.S.A.
Expiration Date: 4/30/2014

THIS PROJECT WAS PREPARED BY ME OR UNDER MY SUPERVISION AND CONSTRUCTION OF THIS PROJECT WILL BE UNDER MY SUPERVISION.

KAKAAKO WORKFORCE HOUSING PER
SUBCHAPTER 4 OF 2011 MAUKA PLAN AND RULES
801 SOUTH STREET
HONOLULU, HAWAII

MECHANICAL SHAFT DIAGRAMS

KAZU YATO, AIA & ASSOCIATES, INC.
2833 KAHANTOP TERRACE
HONOLULU, HI 96822
TEL: (808) 945-0049
FAX: (808) 945-0941

DATE	DATE	MEI	CHECK	FILE
	DRAWN		RSO	

SHEET

M3.1

FAN SCHEDULE

UNIT NO.	MANUFACTURER AND MODEL OR APPROVED EQUAL	QTY	AREA SERVED	TYPE	CFM	ESP (IN WG)	FAN RPM	ELECTRICAL				OPR WT (LBS)	dbA	REMARKS
								V	ø	Hz	HP/W			
EF COR	GREENHECK SWB-336-50	1	TYPICAL FLOOR CORRIDOR EXHAUST	CENTRIFUGAL UTILITY FAN	14,140	1.0	590	460	3	60	5 HP	1,306	71	PROVIDE WITH STARTER AND DISCONNECT, FACTORY CORROSION RESISTANT COATING, FACTORY EQUIPMENT SUPPORTS, RESTRAINED SPRING ISOLATION MOUNTS, WEATHERHOOD, AND DISCHARGE GUARD WITH STAINLESS STEEL BIRDSCREEN. FAN SHALL OPERATE CONTINUOUSLY.
SF COR	GREENHECK SWB-336-50	1	TYPICAL FLOOR CORRIDOR SUPPLY	CENTRIFUGAL UTILITY FAN	13,800	1.0	582	460	3	60	5 HP	1,306	69	PROVIDE WITH STARTER AND DISCONNECT, FACTORY CORROSION RESISTANT COATING, FACTORY EQUIPMENT SUPPORTS, RESTRAINED SPRING ISOLATION MOUNTS, WEATHERHOOD, AND INLET GUARD WITH STAINLESS STEEL BIRDSCREEN. FAN SHALL OPERATE CONTINUOUSLY.
SPF 1	GREENHECK SWB-336-50	1	STAIRWELL 1 PRESSURIZATION	CENTRIFUGAL UTILITY FAN	14,950	1.0	609	460	3	60	5 HP	1,306	70	PROVIDE WITH STARTER AND DISCONNECT, FACTORY CORROSION RESISTANT COATING, FACTORY EQUIPMENT SUPPORTS, RESTRAINED SPRING ISOLATION MOUNTS, WEATHERHOOD, AND INLET GUARD WITH STAINLESS STEEL BIRDSCREEN. INTERLOCK WITH FIRE ALARM SYSTEM.
SPF 2	GREENHECK SWB-336-50	1	STAIRWELL 2 PRESSURIZATION	CENTRIFUGAL UTILITY FAN	14,950	1.0	609	460	3	60	5 HP	1,306	70	PROVIDE WITH STARTER AND DISCONNECT, FACTORY CORROSION RESISTANT COATING, FACTORY EQUIPMENT SUPPORTS, RESTRAINED SPRING ISOLATION MOUNTS, WEATHERHOOD, AND INLET GUARD WITH STAINLESS STEEL BIRDSCREEN. INTERLOCK WITH FIRE ALARM SYSTEM.
PRV 1	GREENHECK G-163-B	1	ELEVATOR MACHINE ROOM	ROOF MOUNTED DOWNBLAST EXHAUST	2,500	0.1	898	230	1	60	1/2 HP	67	61	PROVIDE WITH STARTER AND DISCONNECT, FAN SPEED CONTROLLER, INTEGRAL VIBRATION ISOLATION, FACTORY ROOF CURB, AND STAINLESS STEEL BIRDSCREEN. INTERLOCK WITH THERMOSTATIC SWITCH.
EF #-XX	GREENHECK SP-B70	635	TYPICAL UNIT BATHROOMS	CEILING CABINET	50	0.25	619	115	1	60	45W	25	36	PROVIDE WITH BACKDRAFT DAMPER, ISOLATION MOUNTS, & SOLID STATE FAN SPEED CONTROLLER MOUNTED ON UNIT. INTERLOCK WITH LIGHT SWITCH.
EF 1	GREENHECK SP-B150	1	LOBBY RESTROOM	CEILING CABINET	120	0.25	829	115	1	60	129W	26	33	PROVIDE WITH BACKDRAFT DAMPER, ISOLATION MOUNTS, & SOLID STATE FAN SPEED CONTROLLER MOUNTED ON UNIT. INTERLOCK WITH LIGHT SWITCH.
EF 2	GREENHECK SP-B150	1	LOUNGE RESTROOM	CEILING CABINET	120	0.25	829	115	1	60	129W	26	33	PROVIDE WITH BACKDRAFT DAMPER, ISOLATION MOUNTS, & SOLID STATE FAN SPEED CONTROLLER MOUNTED ON UNIT. INTERLOCK WITH LIGHT SWITCH.
EF 3	GREENHECK CSP-A710	1	FIRE CONTROL	CEILING CABINET	425	0.25	844	115	1	60	325W	52	25	PROVIDE WITH BACKDRAFT DAMPER, ISOLATION MOUNTS, DISCONNECT, & SOLID STATE FAN SPEED CONTROLLER MOUNTED ON UNIT. INTERLOCK WITH THERMOSTATIC SWITCH.
EF 4	GREENHECK CSP-A1050	1	TRASH ROOM	CEILING CABINET	870	0.25	983	115	1	60	455W	75	34	PROVIDE WITH BACKDRAFT DAMPER, ISOLATION MOUNTS, DISCONNECT, & SOLID STATE FAN SPEED CONTROLLER MOUNTED ON UNIT. PROVIDE WALL MOUNTED ON-OFF SWITCH.
EF 5	GREENHECK CSP-A1750	1	ELECTRICAL ROOMS	CEILING CABINET	1,020	0.15	760	115	1	60	550W	84	26	PROVIDE WITH BACKDRAFT DAMPER, ISOLATION MOUNTS, DISCONNECT, & SOLID STATE FAN SPEED CONTROLLER MOUNTED ON UNIT. INTERLOCK WITH THERMOSTATIC SWITCH.
EF 6	GREENHECK CSP-A1050	1	MECHANICAL ROOM	CEILING CABINET	760	0.25	899	115	1	60	455W	75	30	PROVIDE WITH BACKDRAFT DAMPER, ISOLATION MOUNTS, DISCONNECT, & SOLID STATE FAN SPEED CONTROLLER MOUNTED ON UNIT. INTERLOCK WITH THERMOSTATIC SWITCH.
EF 7	GREENHECK CSP-A1750	1	MECHANICAL ROOMS	CEILING CABINET	1,020	0.15	760	115	1	60	550W	84	26	PROVIDE WITH BACKDRAFT DAMPER, ISOLATION MOUNTS, DISCONNECT, & SOLID STATE FAN SPEED CONTROLLER MOUNTED ON UNIT. INTERLOCK WITH THERMOSTATIC SWITCH.
EF 8	GREENHECK CSP-A710	1	FUEL TANK ROOM	CEILING CABINET	430	0.25	848	115	1	60	325W	52	25	PROVIDE WITH BACKDRAFT DAMPER, ISOLATION MOUNTS, DISCONNECT, & SOLID STATE FAN SPEED CONTROLLER MOUNTED ON UNIT. INTERLOCK WITH THERMOSTATIC SWITCH.
EF 9	GREENHECK CSP-A900	1	GENERATOR ROOM	CEILING CABINET	600	0.25	789	115	1	60	328W	75	29	PROVIDE WITH BACKDRAFT DAMPER, ISOLATION MOUNTS, DISCONNECT, & SOLID STATE FAN SPEED CONTROLLER MOUNTED ON UNIT. INTERLOCK WITH THERMOSTATIC SWITCH.
EF 10	GREENHECK CSP-A1050	1	ELECTRICAL ROOM	CEILING CABINET	775	0.25	910	115	1	60	455W	75	31	PROVIDE WITH BACKDRAFT DAMPER, ISOLATION MOUNTS, DISCONNECT, & SOLID STATE FAN SPEED CONTROLLER MOUNTED ON UNIT. INTERLOCK WITH THERMOSTATIC SWITCH.
EF 11	GREENHECK CSP-A710	1	STORAGE	CEILING CABINET	390	0.25	812	115	1	60	325W	52	23	PROVIDE WITH BACKDRAFT DAMPER, ISOLATION MOUNTS, DISCONNECT, & SOLID STATE FAN SPEED CONTROLLER MOUNTED ON UNIT. INTERLOCK WITH THERMOSTATIC SWITCH.
EF 12	GREENHECK SP-B150	1	RECREATION RESTROOM 1	CEILING CABINET	130	0.25	894	115	1	60	129W	26	37	PROVIDE WITH BACKDRAFT DAMPER, ISOLATION MOUNTS, & SOLID STATE FAN SPEED CONTROLLER MOUNTED ON UNIT. INTERLOCK WITH LIGHT SWITCH.
EF 13	GREENHECK SP-B150	1	RECREATION RESTROOM 2	CEILING CABINET	130	0.25	894	115	1	60	129W	26	37	PROVIDE WITH BACKDRAFT DAMPER, ISOLATION MOUNTS, & SOLID STATE FAN SPEED CONTROLLER MOUNTED ON UNIT. INTERLOCK WITH LIGHT SWITCH.
EF 14	GREENHECK CSP-A700	1	UTILITY, STORAGE	CEILING CABINET	570	0.25	869	115	1	60	350W	50	27	PROVIDE WITH BACKDRAFT DAMPER, ISOLATION MOUNTS, DISCONNECT, & SOLID STATE FAN SPEED CONTROLLER MOUNTED ON UNIT. INTERLOCK WITH THERMOSTATIC SWITCH.
SF 1	GREENHECK CSP-A250	1	LOUNGE, OFFICE, MANAGER	CEILING CABINET	165	0.25	807	115	1	60	83W	39	33	PROVIDE WITH BACKDRAFT DAMPER, ISOLATION MOUNTS, & SOLID STATE FAN SPEED CONTROLLER MOUNTED ON UNIT. INTERLOCK WITH FCU-5
SF 2	GREENHECK CSP-A110	1	SECURITY, MAIL	CEILING CABINET	60	0.25	768	115	1	60	51W	32	21	PROVIDE WITH BACKDRAFT DAMPER, ISOLATION MOUNTS, & SOLID STATE FAN SPEED CONTROLLER MOUNTED ON UNIT. INTERLOCK WITH FCU-6
SF 5	GREENHECK CSP-A290	1	RECREATION	CEILING CABINET	200	0.25	850	115	1	60	80W	39	33	PROVIDE WITH BACKDRAFT DAMPER, ISOLATION MOUNTS, & SOLID STATE FAN SPEED CONTROLLER MOUNTED ON UNIT. INTERLOCK WITH FCU-9

UNIT LEGEND: # = FLOOR DESIGNATION (1-46)
X = UNIT DESIGNATION (01-14)

REVISIONS | NO. | DATE

ROSS S. OKUDA LICENSED PROFESSIONAL ENGINEER No. 9377-M HAWAII, U.S.A.

Expiration Date: 4/30/2014

THIS PROJECT WAS PREPARED BY ME OR UNDER MY SUPERVISION AND CONSTRUCTION OF THIS PROJECT WILL BE UNDER MY SUPERVISION.

KAKAAKO WORKFORCE HOUSING PER
SUBCHAPTER 4 OF 2011 MAUKA PLAN AND RULES
801 SOUTH STREET
HONOLULU, HAWAII

MECHANICAL EQUIPMENT SCHEDULES

KAZU YATO, AIA & ASSOCIATES, INC.
2833 ROBERTS TERRACE
HONOLULU, HI 96822
TEL: (808) 945-2040
FAX: (808) 945-2041

DATE | DRAWN: MEI | CHECK: RSO | FILE

SHEET

M4.1

VRF SPLIT-SYSTEM AIR CONDITIONING UNIT SCHEDULE (TOWER GROUND FLOOR)

INDOOR UNITS

UNIT NO.	MANUFACTURER AND MODEL OR APPROVED EQUAL	AREA SERVED	TYPE	MAX SUPPLY AIR, CFM	OUTSIDE AIR, CFM	TOTAL CAPACITY (BTUH)	ENT AIR TEMP		ELECTRICAL					REFRIG LINES*		COND DRAIN	MAX SOUND LEVEL (dBA)	OPR WT (LBS)	REMARKS
							db (°F)	wb (°F)	V	ø	Hz	MCA	MOCP	LIQ	GAS				
FCU 1	LG URNU763B8A2	LOBBY	DUCTED	2,260	210	76,400	80	67	208/230	1	60	6.47	15	3/8"	3/4"	1"	50	192	PROVIDE WITH DISCONNECT, ISOLATION MOUNTS, & INTEGRAL CONDENSATE PUMP
FCU 2	LG ARNU096BHA2	CORRIDOR	DUCTED	300	40	9,600	80	67	208/230	1	60	1.32	15	1/4"	1/2"	1"	35	57	PROVIDE WITH DISCONNECT, ISOLATION MOUNTS, & INTEGRAL CONDENSATE PUMP
FCU 3	LG ARNU243TPA2	LOUNGE	4-WAY CASSETTE	600	75	24,200	80	67	208/230	1	60	0.22	15	3/8"	5/8"	1"	36	46	PROVIDE WITH DISCONNECT, ISOLATION MOUNTS, & INTEGRAL CONDENSATE PUMP
FCU 4	LG ARNU093TRA2	OFFICE	4-WAY CASSETTE	283	45	9,600	80	67	208/230	1	60	0.25	15	1/4"	1/2"	1"	30	31	PROVIDE WITH DISCONNECT, ISOLATION MOUNTS, & INTEGRAL CONDENSATE PUMP
FCU 5	LG ARNU093TRA2	MANAGER	4-WAY CASSETTE	283	45	9,600	80	67	208/230	1	60	0.25	15	1/4"	1/2"	1"	30	31	PROVIDE WITH DISCONNECT, ISOLATION MOUNTS, & INTEGRAL CONDENSATE PUMP
FCU 6	LG ARNU053TRA2	SECURITY	4-WAY CASSETTE	265	25	5,500	80	67	208/230	1	60	0.25	15	1/4"	1/2"	1"	29	29	PROVIDE WITH DISCONNECT, ISOLATION MOUNTS, & INTEGRAL CONDENSATE PUMP
FCU 7	LG ARNU073TRA2	MAIL	4-WAY CASSETTE	265	35	7,500	80	67	208/230	1	60	0.25	15	1/4"	1/2"	1"	29	29	PROVIDE WITH DISCONNECT, ISOLATION MOUNTS, & INTEGRAL CONDENSATE PUMP

*CONTRACTOR SHALL CONFIRM REFRIGERANT PIPE SIZES WITH MANUFACTURER PRIOR TO PROCUREMENT.

OUTDOOR UNIT

UNIT NO.	MANUFACTURER AND MODEL OR APPROVED EQUAL	LOCATION	TYPE	REFRIG	NOMINAL CAPACITY (TONS)	TOTAL CAPACITY (BTUH)	AMBIENT AIR TEMP (°F)	ELECTRICAL					OPR WT (LBS)	REMARKS
								V	ø	Hz	MCA	MOCP		
ACCU 1	LG ARUN144BT3	GROUND LEVEL	VARIABLE REFRIG FLOW	R-410a	12	144,000	95	208	3	60	49.9	70	617	"INVERTER" DRIVEN COMPRESSOR; PROVIDE NEOPRENE ISOLATORS, INTEGRAL STARTER AND DISCONNECT, FACTORY APPLIED CORROSION INHIBITOR COATING ON CONDENSER COIL AND CASING.

VRF SPLIT-SYSTEM AIR CONDITIONING UNIT SCHEDULE (TYPICAL FLOOR ELECTRICAL ROOMS)

INDOOR UNITS

UNIT NO.	MANUFACTURER AND MODEL OR APPROVED EQUAL	QTY	AREA SERVED	TYPE	MAX SUPPLY AIR, CFM	OUTSIDE AIR, CFM	TOTAL CAPACITY (BTUH)	ENT AIR TEMP		ELECTRICAL					REFRIG LINES*		COND DRAIN	MAX SOUND LEVEL (dBA)	OPR WT (LBS)	REMARKS
								db (°F)	wb (°F)	V	ø	Hz	MCA	MOCP	LIQ	GAS				
FCU 4-E	LG ARNU073SEA2	46	TYPICAL FLOOR ELECTRICAL ROOM	WALL MOUNTED	198	0	7,500	80	67	208/230	1	60	0.29	15	1/4"	1/2"	5/8"	37	20	PROVIDE WITH DISCONNECT.

*CONTRACTOR SHALL CONFIRM REFRIGERANT PIPE SIZES WITH MANUFACTURER PRIOR TO PROCUREMENT.

OUTDOOR UNIT

UNIT NO.	MANUFACTURER AND MODEL OR APPROVED EQUAL	LOCATION	TYPE	REFRIG	NOMINAL CAPACITY (TONS)	TOTAL CAPACITY (BTUH)	AMBIENT AIR TEMP (°F)	ELECTRICAL					OPR WT (LBS)	REMARKS
								V	ø	Hz	MCA	MOCP		
ACCU 2	LG ARUN360DT3	TOWER ROOF	VARIABLE REFRIG FLOW	R-410a	30	360,000	95	460	3	60	27.6/27.6/14.9	40/40/25	1,606	"INVERTER" DRIVEN COMPRESSOR; PROVIDE NEOPRENE ISOLATORS, INTEGRAL STARTER AND DISCONNECT, FACTORY APPLIED CORROSION INHIBITOR COATING ON CONDENSER COIL AND CASING.

UNIT LEGEND: # = FLOOR DESIGNATION (1-46)

VRF SPLIT-SYSTEM AIR CONDITIONING UNIT SCHEDULE (RECREATION ROOM)

INDOOR UNITS

UNIT NO.	MANUFACTURER AND MODEL OR APPROVED EQUAL	AREA SERVED	TYPE	MAX SUPPLY AIR, CFM	OUTSIDE AIR, CFM	TOTAL CAPACITY (BTUH)	ENT AIR TEMP		ELECTRICAL					REFRIG LINES*		COND DRAIN	MAX SOUND LEVEL (dBA)	OPR WT (LBS)	REMARKS
							db (°F)	wb (°F)	V	ø	Hz	MCA	MOCP	LIQ	GAS				
FCU 8	LG ARNU243TPA2	RECREATION	4-WAY CASSETTE	600	80	24,200	80	67	208/230	1	60	0.22	15	3/8"	5/8"	1"	36	46	PROVIDE WITH DISCONNECT, ISOLATION MOUNTS, & INTEGRAL CONDENSATE PUMP
FCU 9	LG ARNU243TPA2	RECREATION	4-WAY CASSETTE	600	80	24,200	80	67	208/230	1	60	0.22	15	3/8"	5/8"	1"	36	46	PROVIDE WITH DISCONNECT, ISOLATION MOUNTS, & INTEGRAL CONDENSATE PUMP
FCU 10	LG ARNU483BRA2	RECREATION	DUCTED	1,582	300	48,100	80	67	208/230	1	60	3.45	15	3/8"	5/8"	1"	44	117	PROVIDE WITH DISCONNECT, ISOLATION MOUNTS, & INTEGRAL CONDENSATE PUMP
FCU 11	LG ARNU483BRA2	RECREATION	DUCTED	1,582	300	48,100	80	67	208/230	1	60	3.45	15	3/8"	5/8"	1"	44	117	PROVIDE WITH DISCONNECT, ISOLATION MOUNTS, & INTEGRAL CONDENSATE PUMP
FCU 12	LG ARNU483BRA2	RECREATION	DUCTED	1,582	300	48,100	80	67	208/230	1	60	3.45	15	3/8"	5/8"	1"	44	117	PROVIDE WITH DISCONNECT, ISOLATION MOUNTS, & INTEGRAL CONDENSATE PUMP
FCU 13	LG ARNU483BRA2	RECREATION	DUCTED	1,582	300	48,100	80	67	208/230	1	60	3.45	15	3/8"	5/8"	1"	44	117	PROVIDE WITH DISCONNECT, ISOLATION MOUNTS, & INTEGRAL CONDENSATE PUMP

*CONTRACTOR SHALL CONFIRM REFRIGERANT PIPE SIZES WITH MANUFACTURER PRIOR TO PROCUREMENT.

OUTDOOR UNIT

UNIT NO.	MANUFACTURER AND MODEL OR APPROVED EQUAL	LOCATION	TYPE	REFRIG	NOMINAL CAPACITY (TONS)	TOTAL CAPACITY (BTUH)	AMBIENT AIR TEMP (°F)	ELECTRICAL					OPR WT (LBS)	REMARKS
								V	ø	Hz	MCA	MOCP		
ACCU 3	LG ARUN264DT3	GROUND LEVEL	VARIABLE REFRIG FLOW	R-410a	22	264,000	95	460	3	60	27.6/25.2	40/35	1,188	"INVERTER" DRIVEN COMPRESSOR; PROVIDE NEOPRENE ISOLATORS, INTEGRAL STARTER AND DISCONNECT, FACTORY APPLIED CORROSION INHIBITOR COATING ON CONDENSER COIL AND CASING.

REVISIONS

NO.	DATE

ROSS S. OKUDA
LICENSED PROFESSIONAL ENGINEER
No. 9377-M
HAWAII, U.S.A.
Expiration Date: 4/30/2014

THIS PROJECT WAS PREPARED BY ME OR UNDER MY SUPERVISION AND CONSTRUCTION OF THIS PROJECT WILL BE UNDER MY SUPERVISION.

KAKAAKO WORKFORCE HOUSING PER SUBCHAPTER 4 OF 2011 MAUKA PLAN AND RULES
801 SOUTH STREET
HONOLULU, HAWAII
MECHANICAL EQUIPMENT SCHEDULES

KAZU YATO, AIA & ASSOCIATES, INC.
2222 KALAKAUA AVENUE
HONOLULU, HI 96815
TEL: (808) 945-2040
FAX: (808) 945-2041

DATE	DATE	MEI	RSO
	DRAWN	CHECK	FILE

SHEET

M4.2

DX SPLIT-SYSTEM AIR CONDITIONING UNIT SCHEDULE (UNITS 05 & 09)

INDOOR UNIT

UNIT NO.	MANUFACTURER AND MODEL OR APPROVED EQUAL	AREA SERVED	TYPE	MAX SUPPLY AIR, CFM	TOTAL CAPACITY (BTUH)	ENT AIR TEMP db (°F)	ENT AIR TEMP wb (°F)	REFRIG LINES* LIQ	REFRIG LINES* GAS	COND DRAIN	MAX SOUND LEVEL (dBA)	OPR WT (LBS)	REMARKS
FCU #-X	MIDEA MS9AI-12HRDN1-M	LIVING ROOM	WALL MOUNTED	430	12,000	80	67	1/4"	1/2"	1"	40	30	

*CONTRACTOR SHALL CONFIRM REFRIGERANT PIPE SIZES WITH MANUFACTURER PRIOR TO PROCUREMENT.

OUTDOOR UNIT

UNIT NO.	MANUFACTURER AND MODEL OR APPROVED EQUAL	LOCATION	TYPE	REFRIG	TOTAL CAPACITY (BTUH)	AMBIENT AIR TEMP (°F)	ELECTRICAL V	ELECTRICAL ø	ELECTRICAL Hz	REMARKS
ACCU #-X	MIDEA M2OC-12HRDN1-M	LANAI	DX SPLIT SINGLE-ZONE	R-410a	12,000	95	230	3	60	PROVIDE NEOPRENE ISOLATION MOUNTS, DISCONNECT SWITCH, WIRING AND PIPING TO INDOOR UNITS.

UNIT LEGEND: # = FLOOR DESIGNATION (1-46)
X = UNIT DESIGNATION (01-14)

DX SPLIT-SYSTEM AIR CONDITIONING UNIT SCHEDULE (UNITS 03, 04, 08, 10, 11, & 12)

INDOOR UNITS

UNIT NO.	MANUFACTURER AND MODEL OR APPROVED EQUAL	AREA SERVED	TYPE	MAX SUPPLY AIR, CFM	TOTAL CAPACITY (BTUH)	ENT AIR TEMP db (°F)	ENT AIR TEMP wb (°F)	REFRIG LINES* LIQ	REFRIG LINES* GAS	COND DRAIN	MAX SOUND LEVEL (dBA)	OPR WT (LBS)	REMARKS
FCU #-X	MIDEA MS9AI-12HRDN1-M	LIVING ROOM	WALL MOUNTED	430	12,000	80	67	1/4"	1/2"	1"	40	30	
FCU #-X	MIDEA MS9AI-09HRDN1-M	BEDROOM	WALL MOUNTED	412	9,000	80	67	1/4"	1/2"	1"	40	30	

*CONTRACTOR SHALL CONFIRM REFRIGERANT PIPE SIZES WITH MANUFACTURER PRIOR TO PROCUREMENT.

OUTDOOR UNIT

UNIT NO.	MANUFACTURER AND MODEL OR APPROVED EQUAL	LOCATION	TYPE	REFRIG	TOTAL CAPACITY (BTUH)	AMBIENT AIR TEMP (°F)	ELECTRICAL V	ELECTRICAL ø	ELECTRICAL Hz	REMARKS
ACCU #-X	MIDEA M2OC-18HRDN1-M	LANAI	DX SPLIT MULTI-ZONE	R-410a	18,000	95	230	3	60	PROVIDE NEOPRENE ISOLATION MOUNTS, DISCONNECT SWITCH, WIRING AND PIPING TO INDOOR UNITS.

UNIT LEGEND: # = FLOOR DESIGNATION (1-46)
X = UNIT DESIGNATION (01-14)

DX SPLIT-SYSTEM AIR CONDITIONING UNIT SCHEDULE (UNITS 01, 02, 06, 07, 13, & 14)

INDOOR UNITS

UNIT NO.	MANUFACTURER AND MODEL OR APPROVED EQUAL	AREA SERVED	TYPE	MAX SUPPLY AIR, CFM	TOTAL CAPACITY (BTUH)	ENT AIR TEMP db (°F)	ENT AIR TEMP wb (°F)	REFRIG LINES* LIQ	REFRIG LINES* GAS	COND DRAIN	MAX SOUND LEVEL (dBA)	OPR WT (LBS)	REMARKS
FCU #-X	MIDEA MS9AI-12HRDN1-M	LIVING ROOM	WALL MOUNTED	430	12,000	80	67	1/4"	1/2"	1"	40	30	
FCU #-X	MIDEA MS9AI-09HRDN1-M	BEDROOM	WALL MOUNTED	412	9,000	80	67	1/4"	1/2"	1"	40	30	
FCU #-X	MIDEA MS9AI-09HRDN1-M	BEDROOM	WALL MOUNTED	412	9,000	80	67	1/4"	1/2"	1"	40	30	

*CONTRACTOR SHALL CONFIRM REFRIGERANT PIPE SIZES WITH MANUFACTURER PRIOR TO PROCUREMENT.

OUTDOOR UNIT

UNIT NO.	MANUFACTURER AND MODEL OR APPROVED EQUAL	LOCATION	TYPE	REFRIG	TOTAL CAPACITY (BTUH)	AMBIENT AIR TEMP (°F)	ELECTRICAL V	ELECTRICAL ø	ELECTRICAL Hz	REMARKS
ACCU #-X	MIDEA M2OC-27HRDN1-M	LANAI	DX SPLIT MULTI-ZONE	R-410a	27,000	95	230	3	60	PROVIDE NEOPRENE ISOLATION MOUNTS, DISCONNECT SWITCH, WIRING AND PIPING TO INDOOR UNITS.

UNIT LEGEND: # = FLOOR DESIGNATION (1-46)
X = UNIT DESIGNATION (01-14)

WALL AIR CONDITIONER SCHEDULE

UNIT NO.	MANUFACTURER AND MODEL OR APPROVED EQUAL	QTY	AREA SERVED	TYPE	MAX SUPPLY AIR, CFM	TOTAL CAPACITY (BTUH)	ELECTRICAL V	ELECTRICAL ø	ELECTRICAL Hz	ELECTRICAL A	OPR WT (LBS)	dbA	REMARKS
WAC 1	LG LT143CNR	1	GARAGE ELEVATOR CONTROL ROOM	THRU WALL AIR CONDITIONER	310	13,000	230	1	60	7.5	87	53	

REVISIONS

NO.	DATE



Expiration Date: 4/30/2014

THIS PROJECT WAS PREPARED BY ME OR UNDER MY SUPERVISION AND CONSTRUCTION OF THIS PROJECT WILL BE UNDER MY SUPERVISION.

KAKAAKO WORKFORCE HOUSING PER SUBCHAPTER 4 OF 2011 MAUKA PLAN AND RULES

801 SOUTH STREET
HONOLULU, HAWAII

MECHANICAL EQUIPMENT SCHEDULES

KAZU YATO, AIA & ASSOCIATES, INC.
2222 KALAKAUA AVENUE
HONOLULU, HI 96822
TEL: (808) 945-0049
FAX: (808) 945-0041

DATE	DRAWN	CHECK	FILE
DATE	MEI	RSOJ	

SHEET

M4.3

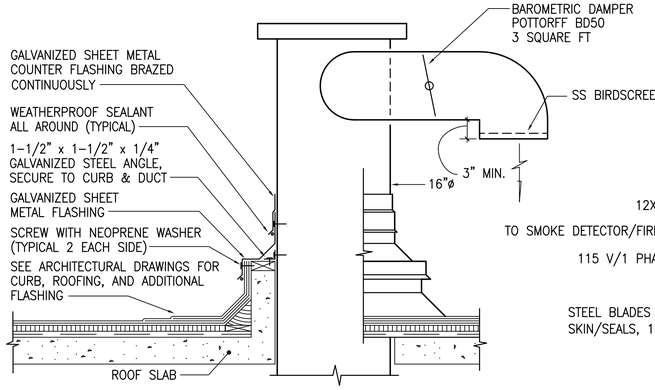

NOTE:
STAIRWAY PRESSURIZATION FANS SHALL BE ACTIVATED BY A SMOKE DETECTOR INSTALLED OUTSIDE THE STAIR ENCLOSURE WITHIN 5 FEET OF THE ENCLOSURE DOOR AND ALSO BY THE ACTIVATION OF THE AUTOMATIC SPRINKLER SYSTEM IN ACCORDANCE WITH UBC. A BAROMETRIC DAMPER RELIEF OPENING AT THE TOP OF THE STAIRWAY SHALL MAINTAIN A MINIMUM POSTIVE PRESSURE OF 0.15 INCH WATER COLUMN IN THE SHAFT RELATIVE TO THE ATMOSPHERIC PRESSURE WITH ALL DOORS CLOSED WHILE DISCHARGING A MINIMUM OF 2,500 CFM THROUGH THE RELIEF OPENING IN ACCORDANCE WITH UBC SECTION 1005.3.3.7

1 / M5.1 BAROMETRIC DAMPER DETAIL
NOT TO SCALE

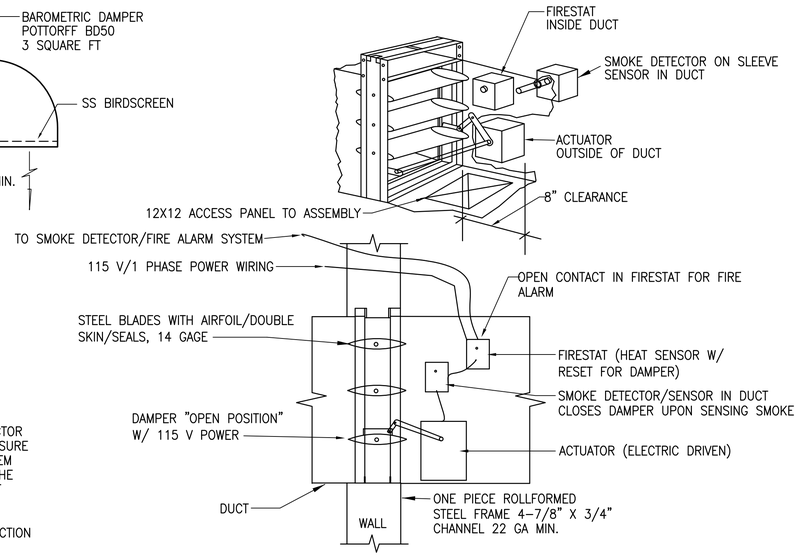

2 / M5.1 FIRE/SMOKE DAMPER DETAIL
NOT TO SCALE FIRESTAT/ACTUATOR TYPE

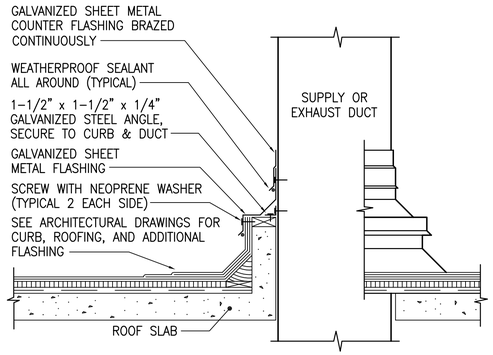

3 / M5.1 DUCT ROOF PENETRATION DETAIL
NOT TO SCALE

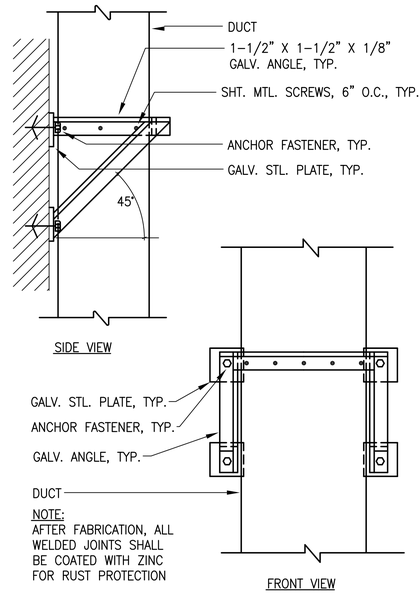

4 / M5.1 VERTICAL DUCT SUPPORT DETAIL
NOT TO SCALE

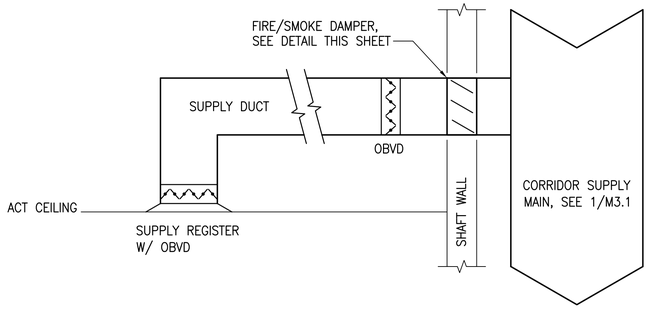

5 / M5.1 CORRIDOR SUPPLY DETAIL
NOT TO SCALE

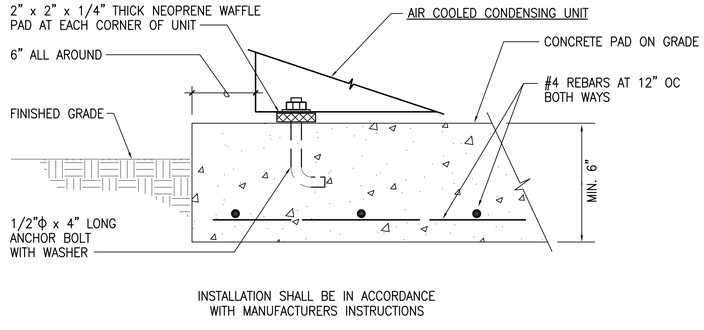

INSTALLATION SHALL BE IN ACCORDANCE WITH MANUFACTURERS INSTRUCTIONS

6 / M5.1 ACCU MOUNTING DETAIL
NOT TO SCALE

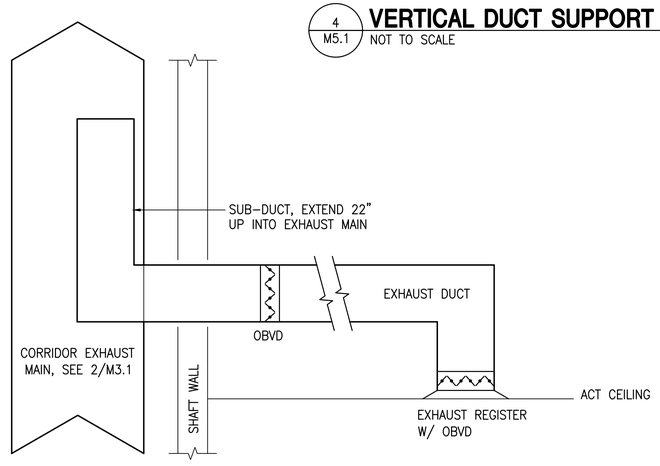

7 / M5.1 CORRIDOR EXHAUST DETAIL
NOT TO SCALE

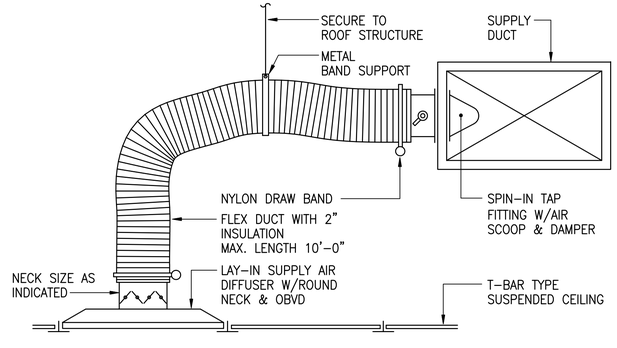

8 / M5.1 SUPPLY DIFFUSER DETAIL
NOT TO SCALE

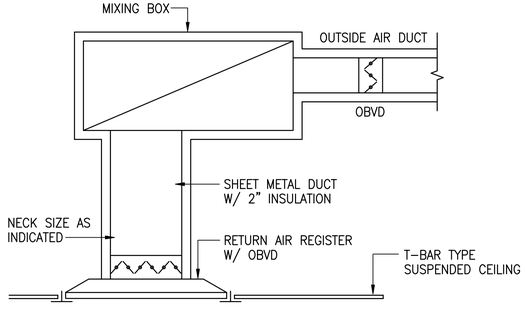

9 / M5.1 RETURN REGISTER DETAIL
NOT TO SCALE

REVISIONS | NO. | DATE

ROSS S. OKUDA
LICENSED PROFESSIONAL ENGINEER
No. 9377-M
HAWAII, U.S.A.
Expiration Date: 4/30/2014

THIS PROJECT WAS PREPARED BY ME OR UNDER MY SUPERVISION AND CONSTRUCTION OF THIS PROJECT WILL BE UNDER MY SUPERVISION.

KAKAAKO WORKFORCE HOUSING
SUBCHAPTER 4 OF 2011 MAUKA PLAN AND RULES
801 SOUTH STREET
HONOLULU, HAWAII
MECHANICAL DETAILS

KAZU YATO, AIA & ASSOCIATES, INC.
2623 KOAHITI TERRACE
HONOLULU, HI 96822
TEL: (808) 945-2040
FAX: (808) 945-2041

DATE | DATE | DRAWN: WEI | CHECK: KSD | FILE

SHEET

M5.1

ELECTRICAL SYMBOL LIST / MOUNTING HEIGHT SCHEDULE

MOUNTING HEIGHT FROM FLOOR TO TOP	MOUNTING HEIGHT FROM FLOOR TO ℄	(SPECIAL MOUNTING HEIGHTS INDICATED ON PLAN) SYMBOL	DESCRIPTION
		(1)	FLUORESCENT LUMINAIRE, CEILING MOUNTED (NUMERAL IN CIRCLE CORRESPONDS TO LUMINAIRE SCHEDULE)
		(1)	FLUORESCENT LUMINAIRE, CEILING MOUNTED CONNECTED TO GENERATOR POWER (NUMERAL IN CIRCLE CORRESPONDS TO LUMINAIRE SCHEDULE)
	7'–6"	(1)	FLUORESCENT LUMINAIRE, WALL MOUNTED (NUMERAL IN CIRCLE CORRESPONDS TO LUMINAIRE SCHEDULE)
			FLUORESCENT LUMINAIRE, SERVED THRU ADJOINING LUMINAIRE
		(1)	LUMINAIRE, CEILING MOUNTED (NUMERAL IN CIRCLE CORRESPONDS TO LUMINAIRE SCHEDULE)
		(1)H	LUMINAIRE, WALL MOUNTED (NUMERAL IN CIRCLE CORRESPONDS TO LUMINAIRE SCHEDULE)
	7'–6"		EMERGENCY LUMINAIRE, WALL MOUNTED
	7'–6"	H	ILLUMINATED EXIT SIGN, WALL MOUNTED, DIRECTIONAL ARROWS AS INDICATED
			ILLUMINATED EXIT SIGN, CEILING MOUNTED, DIRECTIONAL ARROWS AS INDICATED
			POLE LIGHT ASSEMBLY, SINGLE LUMINAIRE PER POLE
			EXISTING STREET LIGHT POLE
	48"	$^{a}	LIGHT SWITCH, FLUSH WALL MOUNTED, 1P20A, 120/277V, 1HP MAX. (LETTER INDICATES LUMINAIRES CONTROLLED)
	48"	$2	DOUBLE POLE SINGLE THROW SWITCH, 20A, 120/277V
	48"	$3	THREE WAY SWITCH, 20A, 120/277V
		$M	MANUAL MOTOR STARTER WITH THERMAL OVERLOAD (SINGLE POLE) 1HP MAX.
	18"		RECEPTACLE, DUPLEX, GROUNDING TYPE, 125V, NEMA TYPE 5–15R
	18"		RECEPTACLE, DUPLEX, HALF SWITCHED GROUNDING TYPE, 125V, NEMA TYPE 5–15R
	18"		RECEPTACLE, DUPLEX, FLUSH MOUNTED, GROUNDING TYPE, 125V NEMA TYPE 5–20R
	18"		RECEPTACLE, DUPLEX, GFCI TYPE, 125V, NEMA TYPE 5–20R
	18"		RECEPTACLE, SINGLE, SPECIAL PURPOSE, 125V, NEMA CONFIGURATION AS NOTED
	18"		RECEPTACLE, SINGLE, SPECIAL PURPOSE, 250V–1ø, NEMA CONFIGURATION AS NOTED
6"			RANGE RECEPTACLE, 50A, NEMA 14–50R
		J	JUNCTION BOX, LARGE, WALL MOUNTED
		J	JUNCTION BOX, LARGE, HORIZONTALLY MOUNTED
		J	JUNCTION BOX, HORIZONTALLY MOUNTED
	18"	J	JUNCTION BOX, WALL MOUNTED
5'–0"		T	TIME SWITCH
			EQUIPMENT TERMINATION WITH FLEXIBLE CONDUIT WHIP
3'–6"			MAGNETIC MOTOR STARTER, FURNISHED BY MECHANICAL CONTRACTOR & INSTALLED BY ELECTRICAL CONTRACTOR
5'–0"			NON–FUSED DISCONNECT SWITCH, 3P30A UNLESS OTHERWISE NOTED, VOLTAGE TO MATCH CIRCUITING
5'–0"			ENCLOSED CIRCUIT BREAKER
		T	TRANSFORMER, PAD OR FLOOR MOUNTED
6'–0"			PANELBOARD
			ELECTRICAL EQUIPMENT
6'–0"			TELEPHONE CABINET
6'–0"			TELEPHONE/SIGNAL BACKBOARD
6'–0"			SIGNAL CABINET FOR SYSTEM NOTED
	18"		TELEPHONE OUTLET BOX, WALL MOUNTED WITH 1 GANG DEVICE PLATE
	18"	V	TV OUTLET, WALL MOUNTED, WITH 1 GANG DEVICE PLATE
	48"	K	CARD ACCESS READER
			CCTV CAMERA OUTLET BOX
	48"	IC	INTERCOM OUTLET BOX
		M	MOTION DETECTOR

MOUNTING HEIGHT FROM FLOOR TO TOP	MOUNTING HEIGHT FROM FLOOR TO ℄	(SPECIAL MOUNTING HEIGHTS INDICATED ON PLAN) SYMBOL	DESCRIPTION
			FIRE ALARM ANNUNCIATOR
5'–0"			FIRE PROTECTION EQUIPMENT CABINET, TYPE AS INDICATED
	48"	FH	FIRE ALARM MANUAL PULL STATION
	7'–6"	FH	FIRE ALARM AUDIO ONLY SIGNALLING DEVICE
	6'–10"	FH	FIRE ALARM AUDIO/VISUAL (75 CANDELA) SIGNALLING DEVICE, SEMI – FLUSH MOUNTED
	6'–10"	FH	FIRE ALARM VISUAL (15 CANDELA) SIGNALLING DEVICE, SEMI – FLUSH MOUNTED
		S	SMOKE DETECTOR, CEILING MOUNTED
		SD	SELF CONTAINED SMOKE DETECTOR, CEILING MOUNTED, 120V, UNLESS OTHERWISE NOTED
	7'–4"	SDH	SELF CONTAINED SMOKE DETECTOR, WALL MOUNTED, 120V, UNLESS OTHERWISE NOTED
		H	HEAT DETECTOR, CEILING MOUNTED
		TS	FIRE SPRINKLER TAMPER SWITCH CONNECTION
		FS	FIRE SPRINKLER WATERFLOW ALARM SWITCH CONNECTION
		FD	FIRE/SMOKE DAMPER WITH INTEGRAL SMOKE DETECTOR (FURNISHED BY MECHANICAL CONTRACTOR, INSTALLED BY ELECTRICAL CONTRACTOR)
	12"	DH	MAGNETIC DOOR HOLDER
	48"	FH	FIREMAN'S PHONE JACK
		A–1,3	HOMERUN ARROW TO PANELBOARD. LETTER INDICATES PANELBOARD, NUMBERS INDICATES CIRCUITS.
			INTERIOR WORK: CONCEALED CONDUIT IN FINISHED FLOOR OR BELOW GRADE (NO HASHMARKS INDICATE 2 CURRENT CARRYING CONDUCTORS AND 1 GROUND CONDUCTOR WITHIN, ALL OTHERS SIMILAR). EXTERIOR WORK: CONCRETE ENCASED UNDERGROUND DUCT LINE, SEE DUCT SECTION INDICATOR AND SCHEDULE.
			CONCEALED CONDUIT IN CEILING OR WALLS, (HASHMARKS INDICATE 3–WIRES WITHIN, ALL OTHERS SIMILAR).
			EXPOSED RACEWAY, PROVIDE STRAP 10'–0" ON CENTER MINIMUM
			LIQUID–TIGHT FLEXIBLE CONDUIT
		E	CONDUIT STUB, 3/4" MINIMUM CONDUIT UNLESS OTHERWISE NOTED
		F	FIRE ALARM RACEWAY, 3/4" MINIMUM CONDUIT, CONDUCTORS AS REQUIRED
		T	TELEPHONE SYSTEM RACEWAY, 3/4" MINIMUM CONDUIT WITH PULL STRING
		S	SECURITY SYSTEM RACEWAY, 3/4" UNLESS NOTED
		V	TV SYSTEM RACEWAY, 3/4" MINIMUM CONDUIT WITH PULL STRING
		A	DUCT SECTION INDICATOR
		1	NOTE INDICATOR
		1 / E2	DETAIL INDICATOR: TOP HALF DENOTES DETAIL NUMBER, BOTTOM HALF DENOTES SHEET NUMBER

GENERAL NOTES:

1. ALL WORK SHOWN ON ELECTRICAL DRAWINGS IS NEW UNLESS OTHERWISE NOTED.
2. CONTRACTOR TO VERIFY ALL EXISTING CONDITIONS AND DIMENSIONS IN THE FIELD PRIOR TO COMMENCEMENT OF NEW WORK.
3. CONTRACTOR SHALL PROVIDE ALL CIRCUITING IN CONFORMANCE WITH THE NEC AND LOCAL BUILDING CODES. ALL CIRCUITING SHALL CONSIST OF COPPER CONDUCTORS RUN IN METALLIC CONDUIT UNLESS OTHERWISE NOTED.
4. THE CONTRACTOR SHALL PROVIDE NECESSARY SEISMIC BRACING TO COMPLY WITH IBC 2006 AS AMENDED.
5. PROVIDE A SEPARATE INSULATED GREEN GROUND CONDUCTOR SIZED IN ACCORDANCE WITH NEC TABLE 250–122, IN ALL FEEDER.
6. VERIFY RATINGS OF ALL ELECTRICALLY OPERATED OR CONTROLLED EQUIPMENT PROVIDED BY THE OTHER TRADES. COORDINATE RATINGS OF OVERCURRENT EQUIPMENT, DEVICES, DISCONNECT SWITCHES, CONDUIT AND WIRING, TO MATCH THE ACTUAL EQUIPMENT SUPPLIED, AT NO ADDITIONAL COST TO THE OWNER.
7. ALL CONTROL DEVICES, CONTROL CONDUIT, CONTROL WIRING AND SEPARATELY ENCLOSED MOTOR STARTERS ARE PROVIDED UNDER APPLICABLE SPECIFICATION SECTIONS. ALL POWER TO ELECTRICALLY OPERATED EQUIPMENT PROVIDED UNDER DIVISION 16–ELECTRICAL SPECIFICATIONS.
8. COORDINATE CONDUIT STUB–UP LOCATIONS FOR ALL EQUIPMENT WITH THE RESPECTIVE EQUIPMENT SUPPLIER PRIOR TO ROUGH–IN WORK.
9. PROVIDE JUNCTION BOXES ON STRUCTURE AND FLEXIBLE CONDUIT WHIP AS REQUIRED FOR ALL RECESSED DOWNLIGHTS LUMINAIRE INSTALLATIONS IN GRID CEILINGS. RECESSED DOWNLIGHTS IN GYPBOARD CEILINGS DON'T REQUIRE A SEPARATE JUNCTION BOX.
10. REFER TO MECHANICAL AND FIRE PROTECTION DRAWINGS FOR MORE DESCRIPTION OF INTERDISCIPLINE ELECTRICAL POWER REQUIREMENTS.

ABBR.	DESCRIPTION
+42"	DENOTES 42" ABOVE FINISHED FLOOR OR GRADE
A.F.F.	ABOVE FINISHED FLOOR
ATS	AUTOMATIC TRANSFER SWITCH
CL	CURFEW LIGHT CIRCUIT
DN	DENOTES DOWN TO FLOOR BELOW
E	EMERGENCY CIRCUIT
EHH	ELECTRICAL HANDHOLE
FH	FIRE HYDRANT
GFCI	GROUND FAULT CIRCUIT INTERRUPTER
GND	GROUND
HECo	HAWAIIAN ELECTRIC COMPANY
HHG	HANDHOLE GROUP
HT	HAWAIIAN TELCOM
HP	HORSEPOWER
KVA	KILOVOLT–AMPERE
KW	KILOWATT
NL	NIGHT LIGHT CIRCUIT
UP	DENOTES UP TO FLOOR ABOVE
WP	WEATHERPROOF

REVISIONS
NO. . DATE . .

GLENN T. KARAMATSU LICENSED PROFESSIONAL ENGINEER No. 4368–E HAWAII, U.S.A.
Expiration Date: 4/30/2014

THIS PROJECT WAS PREPARED BY ME OR UNDER MY SUPERVISION AND CONSTRUCTION OF THIS PROJECT WILL BE UNDER MY SUPERVISION.

KAKAAKO WORKFORCE HOUSING PER SUBCHAPTER 4 OF 2011 MAUKA PLAN AND RULES
801 SOUTH STREET HONOLULU, HAWAII
ELECTRICAL SYMBOL LIST AND GENERAL NOTES

KAZU YATO, AIA & ASSOCIATES, INC.
2033 ROUNDTOP TERRACE HONOLULU, HI 96822
TEL: (808) 945–0040 FAX: (808) 955–0022

DATE | DRAWN MC | CHECK GK | FILE

SHEET
E0.1

11/5/12–8:47 Y:\001\001.528\001.528 E0.1.001.dwg

GENERAL ELECTRIC NOTES

1. ELECTRICAL WORK SHALL BE NEW UNLESS OTHERWISE NOTED.
2. NOT ALL EXISTING ELECTRICAL WORK INDICATED FOR CLARITY.
3. "WIRING" INDICATES INSULATED CONDUCTORS IN CONDUIT.
4. THE LOCATIONS OF THE VARIOUS EXISTING ELECTRICAL WORK SHOWN ON THE CONTRACT DRAWINGS WERE DETERMINED BASED ON THE BEST AVAILABLE INFORMATION. THEREFORE, NO ASSURANCE IS PROVIDED THAT THE ACTUAL LOCATIONS WILL BE PRECISELY AS SHOWN ON THE CONTRACT DRAWINGS. THE CONTRACTOR SHALL VERIFY THE LOCATIONS, ROUTINGS, AND CIRCUITING OF THE FACILITIES AND ALTER HIS WORK ACCORDINGLY. THE CONTRACTOR SHALL BE HELD RESPONSIBLE FOR ANY DAMAGES TO THE FACILITIES.
5. IN PERFORMING ALL WORK, THE CONTRACTOR SHALL EXERCISE DUE CARE AND CAUTION NECESSARY TO AVOID ANY DAMAGE TO AND IMPAIRMENT IN THE USE OF ANY EXISTING FACILITIES. ANY DAMAGE INFLICTED ON EXISTING FACILITIES RESULTING FROM THE CONTRACTOR'S OPERATIONS SHALL BE IMMEDIATELY REPAIRED OR RESTORED AS DIRECTED BY THE ENGINEER AT THE CONTRACTOR'S EXPENSE.
6. ALL DIMENSIONS NOMINAL. VERIFY EXACT DIMENSIONS & EQUIPMENT REQUIREMENTS WITH THE SUCCESSFUL SUPPLIER.

HAWAIIAN TELCOM GENERAL CONSTRUCTION/DESIGN NOTES

1. THE CONTRACTOR SHALL PROCURE AND PAY FOR ALL LICENSES AND PERMITS AND SHALL GIVE ALL NOTICES NECESSARY AND INCIDENT TO THE DUE AND LAWFUL PROSECUTION OF THE WORK.
2. THE CONTRACTOR SHALL OBTAIN AN EXCAVATION PERMIT AND TONING REQUEST FROM HAWAIIAN TELCOM'S EXCAVATION PERMIT SECTION, LOCATED AT ALAKEA STREET, TWO WEEKS PRIOR TO THE START OF CONSTRUCTION. HOURS OF BUSINESS ARE 7:00 A.M. TO 10:45 A.M. AND 11:30 A.M. TO 2:45 P.M., MONDAY THROUGH FRIDAY, EXCEPT HOLIDAYS.
3. PRIOR TO THE EXCAVATION OF THE DUCTLINE, THE CONTRACTOR SHALL REQUEST HAWAIIAN TELCOM TO LOCATE EXISTING DUCTLINE WHEREVER REQUIRED. FOR UNDERGROUND CABLE LOCATING AND MARKING, FIVE (5) WORKING DAYS ADVANCE NOTICE IS REQUIRED. THREE (3) WORKING DAYS ADVANCE NOTICE IS REQUIRED FOR ANY INSPECTION BY A DESIGNATED REPRESENTATIVE.
4. THE LOCATIONS OF EXISTING UTILITIES ARE APPROXIMATE ONLY. THE CONTRACTOR SHALL EXERCISE EXTREME CAUTION AND SHALL MAINTAIN PROPER CLEARANCES WHENEVER CONSTRUCTION CROSSES OR IS IN CLOSE PROXIMITY OF HAWAIIAN TELCOM FACILITIES. THE CONTRACTOR SHALL VERIFY THEIR LOCATIONS AND SHALL BE LIABLE FOR ANY DAMAGES TO HAWAIIAN TELCOM FACILITIES. ANY DAMAGES SHALL BE REPORTED IMMEDIATELY TO HAWAIIAN TELCOM'S REPAIR SECTION AT #611 (24 HOURS) OR TO THE EXCAVATION PERMIT SECTION AT 840-1444 (NORMAL WORKING HOURS, MONDAY THROUGH FRIDAY, EXCEPT HOLIDAYS). AS A RESULT OF HIS OPERATIONS, ADJUSTMENTS TO THE NEW DUCTLINE ALIGNMENT, IF REQUIRED, SHALL BE MADE TO PROVIDE THE REQUIRED CLEARANCES.
5. THE CONTRACTOR SHALL TAKE NECESSARY PRECAUTION NOT TO DAMAGE EXISTING CABLES OR DUCTS. A HAWAIIAN TELCOM INSPECTOR OR DESIGNATED REPRESENTATIVE IS REQUIRED TO BE AT ANY JOB SITE WHENEVER THERE WILL BE A BREAKAGE INTO OR ENTRY INTO ANY STRUCTURE THAT CONTAIN HAWAIIAN TELCOM FACILITIES. TEMPORARY CABLE AND DUCT SUPPORTS SHALL BE PROVIDED WHEREVER NECESSARY.

HAWAIIAN TELCOM GENERAL CONSTRUCTION/DESIGN NOTES

(CONTINUATION)

6. THE CONTRACTOR SHALL NOTIFY HAWAIIAN TELCOM'S INSPECTOR OR DESIGNATED REPRESENTATIVE A MINIMUM OF 72 HOURS PRIOR TO EXCAVATION, BRACING, OR BACKFILLING OF HAWAIIAN TELCOM'S STRUCTURES OR FACILITIES.
7. ALL APPLICABLE CONSTRUCTION WORK SHALL BE DONE IN ACCORDANCE WITH THE "HAWAIIAN TELCOM STANDARD SPECIFICATIONS FOR PLACING UNDERGROUND TELEPHONE SYSTEMS" DATED JANUARY 2007. ALL SUBSEQUENT AMENDMENTS AND ADDITIONS, AND ALL OTHER PERTINENT STANDARDS FOR TELEPHONE CONSTRUCTION. CONTRACTOR SHALL FAMILIARIZE HIS PERSONNEL BY OBTAINING APPLICABLE SPECIFICATIONS.
8. WHEN EXCAVATION IS ADJACENT TO OR BENEATH HAWAIIAN TELCOM'S EXISTING STRUCTURES OR FACILITIES, THE CONTRACTOR SHALL:
   a) SHEET AND/OR BRACE THE EXCAVATION TO PREVENT SLIDES, CAVE-INS, OR SETTLEMENTS TO ENSURE NO MOVEMENT TO HAWAIIAN TELCOM'S STRUCTURES OR FACILITIES.
   b) PROTECT EXISTING STRUCTURES AND/OR FACILITIES WITH BEAMS, STRUTS, OR UNDERPINNING WHILE EXCAVATING BENEATH THEM TO ENSURE NO MOVEMENT TO HAWAIIAN TELCOM'S STRUCTURES OR FACILITIES.
9. THE CONTRACTOR SHALL BRACE ALL POLES OR LIGHT STANDARDS NEAR THE NEW DUCTLINE OR HANDHOLE DURING HIS OPERATIONS.
10. THE CONTRACTOR SHALL SAW-CUT A.C. PAVEMENT AND CONCRETE GUTTER WHEREVER NEW MANHOLES, HANDHOLES, OR DUCTLINES ARE TO BE PLACED AND SHALL RESTORE TO EXISTING CONDITION OR BETTER.
11. THE CONTRACTOR SHALL COMPLY WITH THE POLICY ADOPTED BY THE DEPARTMENT OF PUBLIC WORKS, CITY AND COUNTY OF HONOLULU, CONCERNING THE REPLACEMENT OF CONCRETE SIDEWALKS AFTER EXCAVATION WORK.
12. THE UNDERGROUND PIPES, CABLES, OR DUCTLINES KNOWN TO EXIST BY THE ENGINEER FROM HIS SEARCH OF RECORDS ARE INDICATED ON THE PLANS. THE CONTRACTOR SHALL VERIFY THE LOCATIONS AND DEPTHS OF THE FACILITIES AND EXERCISE PROPER CARE IN EXCAVATING IN THE AREA. WHEREVER CONNECTIONS OF NEW UTILITIES TO EXISTING UTILITIES ARE SHOWN ON THE PLANS, THE CONTRACTOR SHALL EXPOSE THE EXISTING LINES AT THE PROPOSED CONNECTIONS TO VERIFY THEIR LOCATIONS AND DEPTHS PRIOR TO EXCAVATION FOR THE NEW LINES.
13. WHEREVER CONNECTIONS TO EXISTING UTILITIES ARE SHOWN ON THE PLANS, THE CONTRACTOR SHALL EXPOSE THE EXISTING LINES PRIOR TO EXCAVATION OF THE MAIN TRENCHES TO VERIFY THEIR LOCATIONS AND DEPTHS.
14. THE CONTRACTOR, AT HIS OWN EXPENSE, SHALL KEEP THE PROJECT AND SURROUNDING AREA FREE FROM DUST NUISANCE. THE COST FOR SUPPLEMENTARY MEASURES, WHICH WILL BE REQUIRED BY THE CITY AND COUNTY, SHALL BE BORNE BY THE CONTRACTOR.
15. THE CONTRACTOR SHALL PUMP ALL HANDHOLES DRY DURING FINAL INSPECTION.
16. THE CONTRACTOR SHALL NOTIFY THE HAWAIIAN TELCOM INSPECTOR 24 HOURS PRIOR TO THE POURING OF CONCRETE OR BACKFILLING.
17. WHEN CONNECTING TO HANDHOLE WALLS, ALL EXISTING REINFORCING BARS SHALL BE LEFT INTACT. DUCTS SHALL BE ADJUSTED IN THE FIELD IN ORDER TO CLEAR REINFORCING.
18. THE CONTRACTOR SHALL BE RESPONSIBLE FOR LAYING OUT ALL REQUIRED LINES AND GRADES AND SHALL PRESERVE ALL BENCH MARKS AND WORKING POINTS NECESSARY TO LAYOUT THE WORK CORRECTLY. THE NEW DUCTLINE SHALL BE ADJUSTED BY THE CONTRACTOR TO SUIT THE EXISTING CONDITIONS AND THE DETAILS AS DESCRIBED IN THE PLANS.
19. MINIMUM CONCRETE STRENGTH SHALL BE:
   a) FOR DUCTLINE 2500 PSI AT 28 DAYS
   b) FOR HANDHOLE 3000 PSI AT 28 DAYS OR AS SPECIFIED IN DESIGN NOTES
20. BENDS IN THE DUCT ALIGNMENT, DUE TO CHANGES IN GRADE SHALL HAVE A MINIMUM RADIUS OF 25 FEET. ALL 90-DEGREE C-BENDS AT A POLE OR AT THE BUILDING FLOOR SLAB PENETRATION, SHALL HAVE A BEND RADIUS OF TEN TIMES THE DIAMETER OF THE DUCT OR GREATER.
21. AFTER DUCTLINE HAS BEEN COMPLETED, A MANDREL WITH A SQUARE FRONT NOT LESS THAN 12" LONG AND HAVING A DIAMETER OF 1/4" LESS THAN THE INSIDE DIAMETER OF THE DUCT, SHALL BE PULLED THROUGH EACH DUCT AFTER WHICH A BRUSH WITH STIFF BRISTLES SHALL BE PULLED THROUGH TO MAKE CERTAIN THAT NO PARTICLES OF EARTH, SAND, OR GRAVEL HAVE BEEN LEFT INSIDE. DUCTS SHALL BE COMPLETELY DRY AND CLEAN.
22. ALL DUCTS AND CONDUITS SHALL HAVE AN 1800# POLYESTER MULE-TAPE (NEPTCO, WP1800P, HAWAIIAN TELCOM MATERIAL CODE NO. 571154) INSTALLED THROUGHOUT ITS ENTIRE LENGTH. ALL DUCTS SHALL BE CAPPED TO PREVENT ENTRY OF FOREIGN MATERIAL DURING CONSTRUCTION AND AT THE COMPLETION OF INSTALLATION.
23. ALL PULLBOXES INSTALLED IN NON-SIDEWALK AREAS WILL REQUIRE A 10" CONCRETE COLLAR, 5" THICK AROUND THE ENTIRE COVER FEATHERED TO FINISHED GRADE.

OCEANIC TIME WARNER CABLE GENERAL CONTRACTOR'S NOTES:

1. THE CONTRACTOR SHALL PROCURE AND PAY FOR ALL LICENSES AND PERMITS AND SHALL GIVE ALL NOTICES NECESSARY AND INCIDENT TO THE DUE AND LAWFULL PROSECUTION OF THE WORK.
2. THE LOCATIONS OF EXISTING UTILITIES ARE APPROXIMATE ONLY. THE CONTRACTOR SHALL VERIFY THEIR LOCATIONS AND SHALL BE RESPONSIBLE FOR ANY DAMAGES TO THESE UTILITIES AS A RESULT OF HIS OPERATIONS. ADJUSTMENTS TO THE NEW DUCTLINE ALIGNMENT, IF REQUIRED, SHALL BE MADE TO PROVIDE THE REQUIRED CLEARANCES.
3. THE CONTRACTOR SHALL SAW-CUT A.C. PAVEMENT, CONCRETE GUTTER, AND CONCRETE SIDEWALK WHEREVER NEW MANHOLES, HANDHOLES, PULLBOXES OR DUCTLINES ARE TO BE PLACED AND SHALL RESTORE TO EXISTING CONDITION OR BETTER.
4. THE CONTRACTOR, AT HIS OWN EXPENSE, SHALL KEEP THE PROJECT AND SURROUNDING AREA FREE FROM DUST NUISANCE. THE COST FOR SUPPLEMENTARY MEASURES, WHICH WILL BE REQUIRED BY THE CITY AND COUNTY, SHALL BE BORNE BY THE CONTRACTOR.
5. PRIOR TO THE EXCAVATION OF THE DUCTLINE, THE CONTRACTOR SHALL REQUEST THAT OCEANIC CABLE COMPANY TO LOCATE EXISTING DUCTLINE WHEREVER REQUIRED.
6. THE CONTRACTOR SHALL TAKE NECESSARY PRECAUTION NOT TO DAMAGE EXISTING CABLES OR DUCTS. ANY WORK INVOLVING EXISTING CABLES OR DUCTS SHALL BE DONE IN THE PRESENCE OF THE OCEANIC CABLE COMPANY INSPECTOR OR HIS REPRESENTATIVE.
7. THE CONTRACTOR SHALL NOTIFY THE OCEANIC CABLE COMPANY INSPECTOR 48 HOURS PRIOR TO THE POURING OF CONCRETE OR BACKFILLING.
8. WHEREVER CONNECTIONS TO EXISTING UTILITIES ARE SHOWN ON THE PLANS, THE CONTRACTOR SHALL EXPOSE THE EXISTING LINES PRIOR TO EXCAVATION OF THE MAIN TRENCHES TO VERIFY THEIR LOCATIONS AND DEPTHS.
9. CONTRACTOR SHALL PROVIDE ALL MATERIALS AND FURNISH ALL LABOR AND EQUIPMENT NECESSARY TO INSTALL THE DUCTLINE IN PLACE COMPLETE.
10. THE CONTRACTOR SHALL BE RESPONSIBLE FOR LAYING OUT ALL REQUIRED LINES AND GRADES AND SHALL PRESERVE ALL BENCH MARKS AND WORKING POINTS NECESSARY TO LAY OUT THE WORK CORRECTLY. THE NEW DUCTLINE SHALL BE ADJUSTED BY THE CONTRACTOR TO SUIT THE EXISTING CONDITIONS AND THE DETAILS AS DESCRIBED IN THE PLANS.
11. THE CONTRACTOR, AT HIS OWN EXPENSE, SHALL KEEP THE PROJECT AREA FREE FROM DUST NUISANCE. THE WORK SHALL BE IN CONFORMANCE WITH THE AIR POLLUTION CONTROL STANDARDS AND REGULATIONS OF THE STATE OF HAWAII, DEPARTMENT OF HEALTH.
12. THE LOCATION OF CATV FACILITIES SHOWN ON PLANS ARE FROM EXISTING RECORDS WITH VARYING DEGREES OF ACCURACY AS TO ITS ACTUAL FIXED LOCATION. THE CONTRACTOR SHALL USE EXTREME CAUTION WHEN WORKING IN CLOSE PROXIMITY OF CATV FACILITIES.
13. THE CONTRACTOR SHALL OBTAIN EXCAVATION PERMIT CLEARANCE FROM OCEANIC'S ENGINEERING SECTION LOCATED AT 200 AKAMAINUI ST., MILILANI TECH PARK.
14. FOR ANY FIELD ASSISTANCE OR VERIFICATION OF CATV FACILITIES, THE CONTRACTOR SHALL CALL THE TECHNICAL OPERATIONS CENTER AT 625-8378.
15. ANY WORK REQUIRED TO RELOCATE CATV FACILITIES SHALL BE DONE BY OCEANIC CABLE AND THE CONTRACTOR SHALL BE RESPONSIBLE FOR ALL COORDINATION REQUIREMENTS AND ASSOCIATED COSTS.
16. ANY DAMAGE TO OCEANIC'S FACILITIES SHALL BE REPORTED TO OCI'S REPAIR DISPATCH DEPARTMENT AT 625-8437.
17. THE CONTRACTOR SHALL TUNNEL UNDER EXISTING CONCRETE CURB AND GUTTER AS NECESSARY TO EXTEND CONDUIT INTO EXISTING CATV PULLBOX AND INTO THE PROPOSED POWER SUPPLY PULLBOX.
18. ALL EXISTING IMPROVEMENTS THAT ARE DISTURBED DURING THE CONSTRUCTION PHASE SHALL BE RESTORED TO ITS ORIGINAL OR BETTER CONDITION AT NO COST TO THE CITY IN ACCORDANCE WITH CITY'S STANDARDS.
19. AT LOCATIONS WHERE EXISTING CATV PULLBOX REPLACEMENT IS PROPOSED, THE CONTRACTOR SHALL TAKE ALL NECESSARY PRECAUTION NOT TO DAMAGE THE EXISTING CABLES IN THE PULLBOX. ALL DAMAGES TO EXISTING CABLES SHALL BE REPAIRED BY OCEANIC CABLE AND PAID FOR BY THE CONTRACTOR.
20. COORDINATE ALL PENETRATION OF TELEPHONE PULLBOXES WITH GTE HAWAIIAN TEL INSPECTOR.
21. SMOOTH FINISH INSIDE WALL OF EXISTING PULLBOXES AND HANDHOLES TO ITS ORIGINAL CONDITION OR BETTER.
22. THE CONTRACTOR SHALL INSTALL NEPTCO WP1800 MULETAPE OR APPROVED EQUAL IN ALL DUCTLINES, LEAVE MULETAPE IN PLACE FOR FUTURE USE AS A PULL OR FISH LINE, UNLESS OTHERWISE NOTED. REFERENCE GTE MATERIAL CODE NO. 571154. ALL DUCTS SHALL BE CAPPED TO PREVENT ENTRY OF FOREIGN MATERIAL DURING CONSTRUCTION AND AT COMPLETION OF INSTALLATION.

OCEANIC TIME WARNER CABLE GENERAL CONTRACTOR'S NOTES:

(CONTINUATION)

23. THE CONTRACTOR SHALL PLACE POLY CORD THROUGH OUT PROJECT, AND SECURE IN MANHOLES, HANDHOLES, AND PULLBOXES.
24. PENETRATION INTO PULLBOXES IF NECESSARY TO BE FROM FACTORY INSTALLED OPENING OR FROM BRICKS POSITION. PENETRATION FROM PULLBOX WALLS IS NOT ACCEPTABLE.
25. A MINIMUM OF (2) PRECAST SECTIONS MUST BE USED ON ALL 2 x 4 OR 2 x 6 PULLBOXES.
26. TWO MINIMUM LAYERS OF BRICKS TO BE USED SHALL ALWAYS BE AT LEAST ONE LAYER LOWER THAN THE LOWEST DUCT ENTERING THE PULLBOX. AT NO TIME HOWEVER, SHALL THERE BE LESS THAN TWO LAYERS OF BRICKS ON EACH INSTALLATION.
27. AT NO TIME SHALL CEMENT MORTAR, WOOD, OR ANY OTHER MATERIAL BE USED BETWEEN PRECAST SECTIONS. LEVELING OR RAISING OF BOXES TO GRADE MUST BE DONE AT BRICKWORK SECTION USING CEMENT MORTAR. THE PERMANENT INSTALLATION OF WOODEN WEDGES TO ACCOMPLISH THIS PURPOSE WILL NOT BE ACCEPTED.
28. CONCRETE PRECAST BASE MAY BE USED AS AN ALTERNATIVE TO BRICKS.
29. TRENCHING TO BE BY HAND DIGGING NEAR AND ACROSS EXISTING UTILITY LINES.
30. MINIMUM CLEARANCE BETWEEN STREET LIGHT STAND AND FIRE HYDRANTS SHALL BE THREE FEET.
31. UNDERGROUND UTILITIES SHOWN HEREON IS FOR INFORMATION ONLY. NO GUARANTEE IS MADE ON THE ACCURACY OR COMPLETENESS OF SAID INSTALLATION.
32. FOR UNDERGROUND CABLE LOCATING AND MARKING, FIVE WORKING DAYS ADVANCE NOTICE IS REQUIRED. THREE WORKING DAYS ADVANCE NOTICE IS REQUIRED FOR ANY INSPECTION BY A DESIGNATE REPRESENTATIVE. CONTRACTOR SHALL TAKE NECESSARY PRECAUTION NOT TO DAMAGE ANY EXISTING CABLES OR DUCTS. OCEANIC'S INSPECTOR OR DESIGNATED REPRESENTATIVE IS REQUIRED TO BE AT ANY JOB SITE WHENEVER THERE WILL BE A BREAKAGE INTO OR ENTRY INTO ANY STRUCTURE THAT CONTAIN OCEANIC'S FACILITIES.
33. CONCRETE STRENGTH SHALL BE 3000 PSI IN 28 DAYS.
34. BENDS IN THE DUCT ALIGNMENT, DUE TO CHANGES IN GRADE SHALL HAVE A MINIMUM RADIUS OF 20-FEET. ALL 90-DEGREE C-BENDS AT A POLE OR AT THE BUILDING FLOOR SLAB PENETRATION, SHALL HAVE A BEND RADIUS OF TEN TIMES THE DIAMETER OF THE DUCT OR GREATER.
35. AFTER DUCTLINE HAS BEEN COMPLETED, A MANDREL WITH A SQUARE FRONT NOT LESS THAN 12-INCH LONG AND HAVING A DIAMETER OF 1/4-INCH LESS THAN THE INSIDE DIAMETER OF DUCT, SHALL BE PULLED THROUGH EACH DUCT AFTER WHICH A BRUSH WITH STIFF BRISTLES SHALL BE PULLED THROUGH TO MAKE CERTAIN THAT NO PARTICLES OF EARTH, SAND, OR GRAVEL HAVE BEEN LEFT INSIDE. DUCTS SHALL BE COMPLETELY DRY AND CLEAN.
36. METALLIC ENTRANCE CONDUITS SHALL BE GROUNDED.
37. ALL CONDUITS WITHIN A BUILDING SHALL:
   A) BE INSTALLED IN THE SHORTEST AND STRAIGHTEST POSSIBLE RUN.
   B) HAVE NO SECTION LONGER THAN 100-FEET NOR CONTAIN MORE THAN TWO 90-DEGREE BENDS. AN APPROVED SIZED JUNCTION BOX OR GUTTER BOX SHALL BE PLACED IF THIS IS EXCEEDED.
   C) ALL BENDS SHALL BE LONG SWEEP-RADIUS BENDS BUT THE INSIDE RADIUS OF THE BEND MUST NEVER BE LESS THAN TEN TIMES THE DIAMETER OF THE CONDUIT.
38. ALL CONSTRUCTION MUST BE INSPECTED AND APPROVED BY OCEANIC PRIOR TO THE INSTALLATION OF ANY OF ITS FACILITIES AND THE ENERGIZING OF ITS SYSTEM.
39. CONTRACTOR AND/OR CUSTOMER SHALL PROVIDE OCEANIC WITH SUFFICIENT INSTALLATION TIME IN THEIR OCCUPANCY TIME TABLE.
40. INSTALL 4-MIL. THICK ORANGE COLOR WARNING TAPE 3-INCH WIDE, ENTIRE LENGTH OF TRENCH WHEN PLACING CATV CONDUITS. TAPE SHOULD READ "CAUTION BURIED CABLE LINE BELOW". MANUFACTURED BY HARRIS INDUSTRIES, INC., CATALOG NUMBER UT-43 OR EQUIVALENT TAPE. TAPE TO BE INSTALLED 12-INCHES BELOW GRADE.

REVISIONS

NO.	DATE	REVISIONS
.	.	.

GLENN T. KARAMATSU ★ LICENSED PROFESSIONAL ENGINEER No. 4368-E ★ HAWAII, U.S.A.
Expiration Date: 4/30/2014

THIS PROJECT WAS PREPARED BY ME OR UNDER MY SUPERVISION AND CONSTRUCTION OF THIS PROJECT WILL BE UNDER MY SUPERVISION.

KAKAAKO WORKFORCE HOUSING PER SUBCHAPTER 4 OF 2011 MAUKA PLAN AND RULES
801 SOUTH STREET HONOLULU, HAWAII
ELECTRICAL SITE NOTES

KAZU YATO, AIA & ASSOCIATES, INC.
2033 ROUNDTOP TERRACE HONOLULU, HI 96822
TEL: (808) 945-2040 FAX: (808) 955-3052

DATE	DRAWN	CHECK	FILE
	MC	GK	

SHEET

E0.2

11/5/12-8:47 Y:\001\001.528\001.528 E0.2.002.dwg

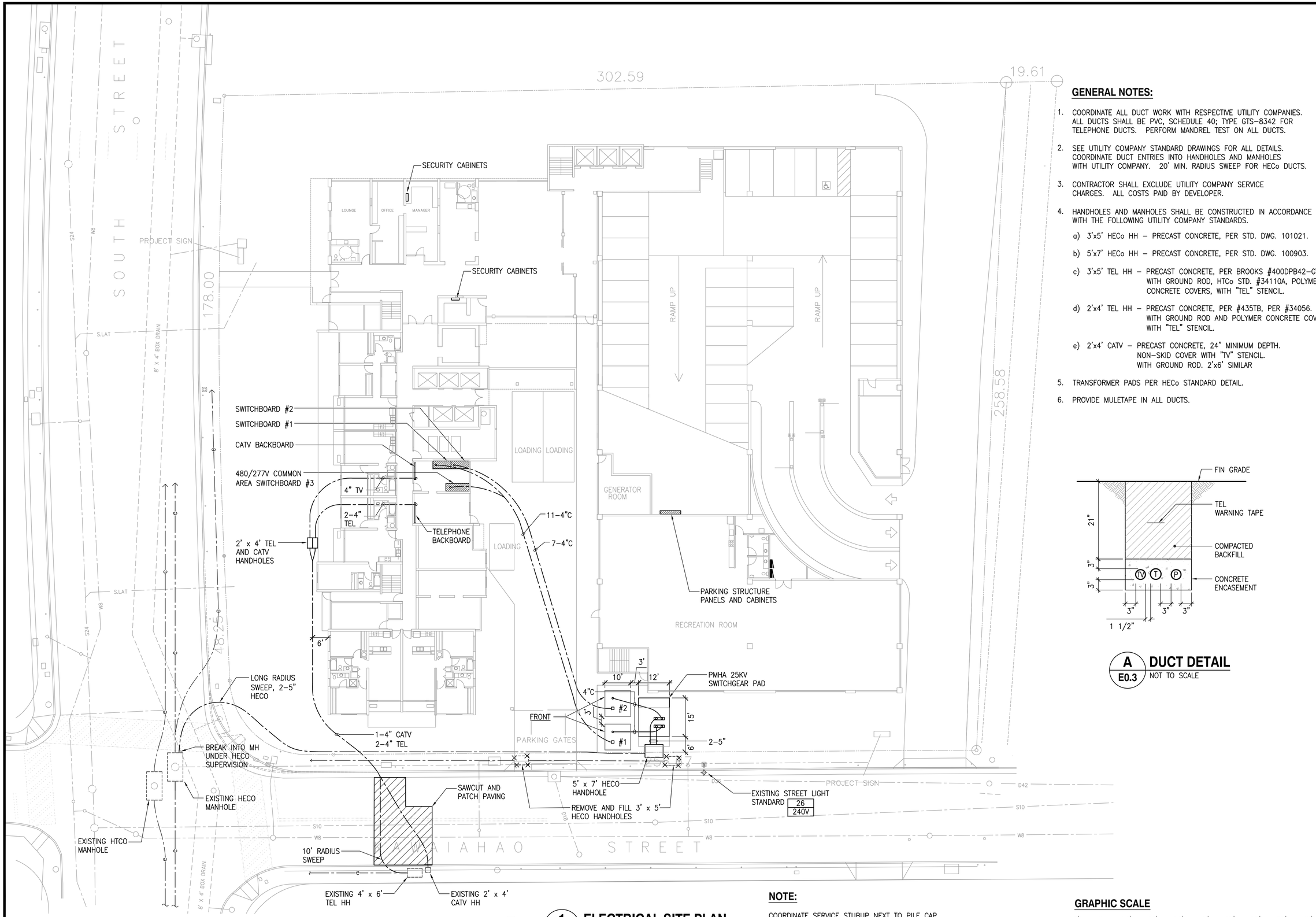

GENERAL NOTES:

1. COORDINATE ALL DUCT WORK WITH RESPECTIVE UTILITY COMPANIES. ALL DUCTS SHALL BE PVC, SCHEDULE 40; TYPE GTS-8342 FOR TELEPHONE DUCTS. PERFORM MANDREL TEST ON ALL DUCTS.
2. SEE UTILITY COMPANY STANDARD DRAWINGS FOR ALL DETAILS. COORDINATE DUCT ENTRIES INTO HANDHOLES AND MANHOLES WITH UTILITY COMPANY. 20' MIN. RADIUS SWEEP FOR HECo DUCTS.
3. CONTRACTOR SHALL EXCLUDE UTILITY COMPANY SERVICE CHARGES. ALL COSTS PAID BY DEVELOPER.
4. HANDHOLES AND MANHOLES SHALL BE CONSTRUCTED IN ACCORDANCE WITH THE FOLLOWING UTILITY COMPANY STANDARDS.
   a) 3'x5' HECo HH – PRECAST CONCRETE, PER STD. DWG. 101021.
   b) 5'x7' HECo HH – PRECAST CONCRETE, PER STD. DWG. 100903.
   c) 3'x5' TEL HH – PRECAST CONCRETE, PER BROOKS #400DPB42-GT6. WITH GROUND ROD, HTCo STD. #34110A, POLYMER CONCRETE COVERS, WITH "TEL" STENCIL.
   d) 2'x4' TEL HH – PRECAST CONCRETE, PER #435TB, PER #34056. WITH GROUND ROD AND POLYMER CONCRETE COVER, WITH "TEL" STENCIL.
   e) 2'x4' CATV – PRECAST CONCRETE, 24" MINIMUM DEPTH. NON-SKID COVER WITH "TV" STENCIL. WITH GROUND ROD. 2'x6' SIMILAR
5. TRANSFORMER PADS PER HECo STANDARD DETAIL.
6. PROVIDE MULETAPE IN ALL DUCTS.

A / E0.3 DUCT DETAIL
NOT TO SCALE

1 / E0.3 ELECTRICAL SITE PLAN
SCALE: 1/16" = 1'-0"

NOTE:

COORDINATE SERVICE STUBUP NEXT TO PILE CAP WITH STRUCTURAL. SEE SHEET S-1.1 AND S-3.2.

GRAPHIC SCALE

10' 0 10' 20' 30' 40' 50' 60' 70' 80'

1/16" = 1'-0"

REVISIONS

NO.	DATE	
.	.	.

GLENN T. KARAMATSU
LICENSED PROFESSIONAL ENGINEER
No. 4,368-E
HAWAII, U.S.A.
Expiration Date: 4/30/2014

THIS PROJECT WAS PREPARED BY ME OR UNDER MY SUPERVISION AND CONSTRUCTION OF THIS PROJECT WILL BE UNDER MY SUPERVISION.

KAKAAKO WORKFORCE HOUSING PER SUBCHAPTER 4 OF 2011 MAUKA PLAN AND RULES

801 SOUTH STREET
HONOLULU, HAWAII

ELECTRICAL SITE PLAN

KAZU YATO, AIA & ASSOCIATES, INC.
2033 ROUNDTOP TERRACE
HONOLULU, HI 96822
TEL: (808) 945-0040
FAX: (808) 955-0052

DATE	DRAWN	CHECK	FILE
	MC	GK	

SHEET

E0.3

11/5/12-8:47 Y:\001\001.528\001.528 E0.3.S01.dwg

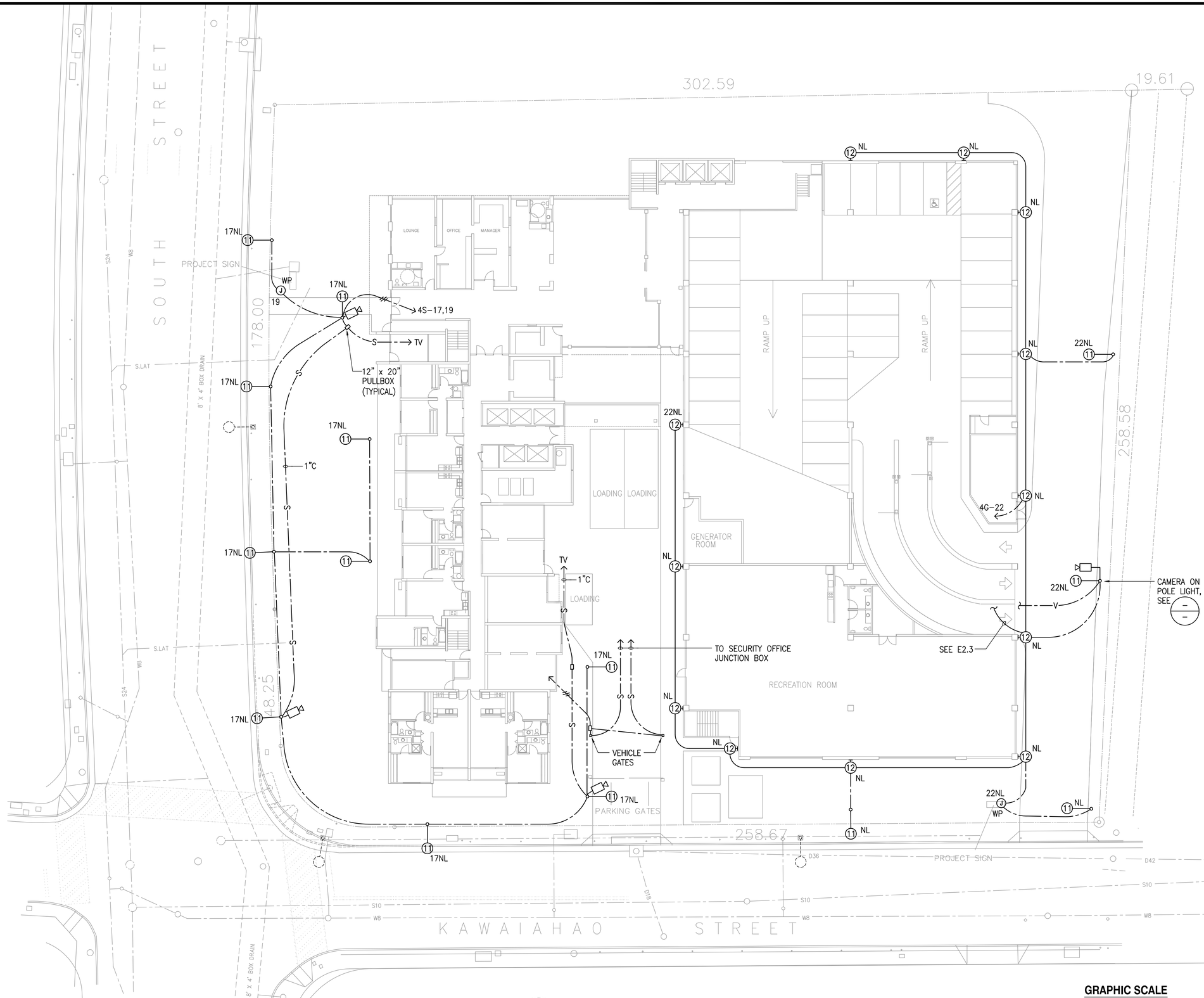

1 E0.4 **LIGHTING SITE PLAN**
SCALE: 1/16" = 1'-0"

GRAPHIC SCALE
10' 0 10' 20' 30' 40' 50' 60' 70' 80'
1/16" = 1'-0"

NO.	DATE	REVISIONS
.	.	.

GLENN T. KARAMATSU ★ LICENSED PROFESSIONAL ENGINEER No. 4368-E ★ HAWAII, U.S.A.
Expiration Date: 4/30/2014

THIS PROJECT WAS PREPARED BY ME OR UNDER MY SUPERVISION AND CONSTRUCTION OF THIS PROJECT WILL BE UNDER MY SUPERVISION.

KAKAAKO WORKFORCE HOUSING PER SUBCHAPTER 4 OF 2011 MAUKA PLAN AND RULES

801 SOUTH STREET
HONOLULU, HAWAII

LIGHTING SITE PLAN

KAZU YATO, AIA & ASSOCIATES, INC.
2033 ROUNDTOP TERRACE
HONOLULU, HI 96822
TEL: (808) 945-2040
FAX: (808) 955-3052

DATE	DRAWN	CHECK	FILE
	MC	GK	

SHEET
E0.4

11/5/12-8:46 Y:\001\001.528\001.528 E0.4.S02.dwg

NOTES:

1. DETAIL DOES NOT APPLY TO RESTORATION OF CONCRETE CURB AND GUTTER. SEE CIVIL PLANS FOR DETAILS.
2. PAVEMENT STRUCTURE SHALL BE EQUAL OR BETTER THAN EXISTING PAVEMENT IN THICKNESS AND QUALITY.
3. FOR GRASSED AREAS, PROVIDE 4" LAYER OF TOPSOIL OR MATCH EXISTING, WHICHEVER IS GREATER, AND RE-GRASS TO MATCH EXISTING.
4. CONTRACTOR SHALL COMPLY WITH CITY JOINTING POLICY DATED 4/6/09.

   HT NOTE:
5. ADHERE TO HAWAIIAN TELCOM STANDARD SPECIFICATIONS FOR PLACING TELEPHONE SYSTEMS DATED JANUARY 2007.

* REMOVE AND RECONSTRUCT AC PAVEMENT TO EDGE OF EXISTING GUTTER IF LESS THAN 2'-0" FROM EDGE OF TRENCH TO EDGE OF GUTTER

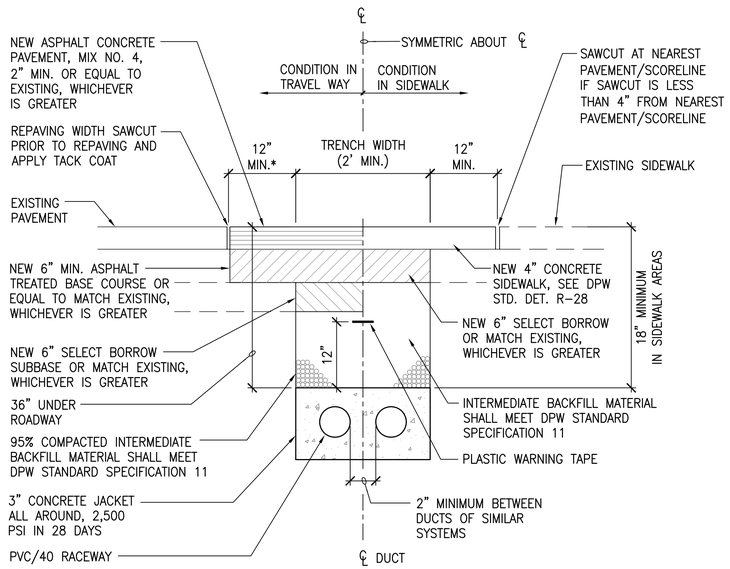

A E0.5 **PAVEMENT AND SIDEWALK REPAIR**
NOT TO SCALE

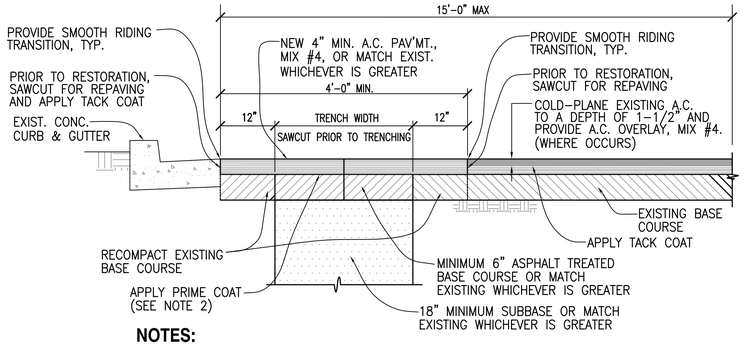

NOTES:

1. PAVEMENT STRUCTURE SHALL BE EQUAL TO OR BETTER THAN EXISTING IN THICKNESS AND QUALITY.
2. FOR ROAD GRADES 0% TO 7.99% PRIME COAT IS NOT REQUIRED.
3. ALL DISTURBED PAVEMENT MARKINGS SHALL BE REPLACED AND ALL REQUIRED UTILITY ADJUSTMENTS SUCH AS MANHOLE COVERS ETC. SHALL BE DONE BY THE PERMITTEE.
4. TRENCHES RUNNING LONGITUDINALLY TO THE TRAVEL WAY ON ROADWAYS WHERE THE PAVED TRAVEL WAY IS GREATER THAN 36 FEET SHALL BE COLD PLANED A MINIMUM OF TWO INCHES AND REPAVED TO THE ORIGINAL GRADE. THE PAVING SHALL BE A MINIMUM WIDTH OF ONE LANE NOT EXCEEDING 15 FEET IN WIDTH WITH A MINIMUM OF TWO FEET IN ADDED LENGTH TO EACH END OF THE LONGITUDINAL TRENCH. THE REPLACED PAVEMENT WITHIN THE TRENCH LIMITS, PLUS AN ADDITIONAL ONE FOOT ON EACH SIDE OF THE TRENCH (T-SECTION), SHALL HAVE A MINIMUM THICKNESS OF FOUR INCHES OF ASPHALT CONCRETE OR MATCH THE EXISTING PAVEMENT THICKNESS, WHICHEVER IS GREATER.

B E0.5 **A.C. PAVEMENT TRENCH RESTORATION DETAIL**
NOT TO SCALE

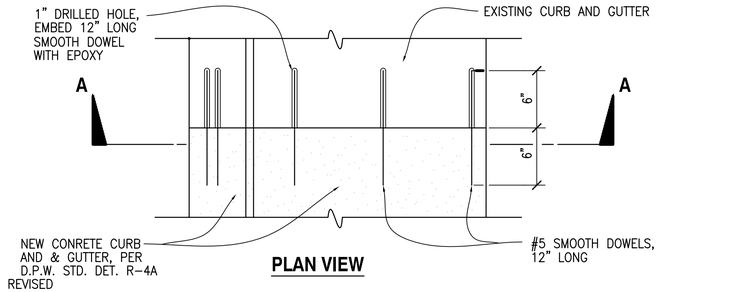

PLAN VIEW

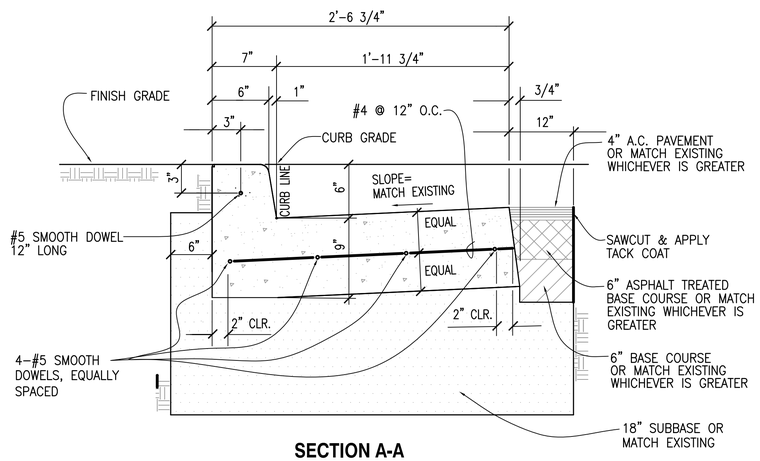

SECTION A-A

C E0.5 **CURB AND GUTTER RESTORATION DETAIL**
NOT TO SCALE

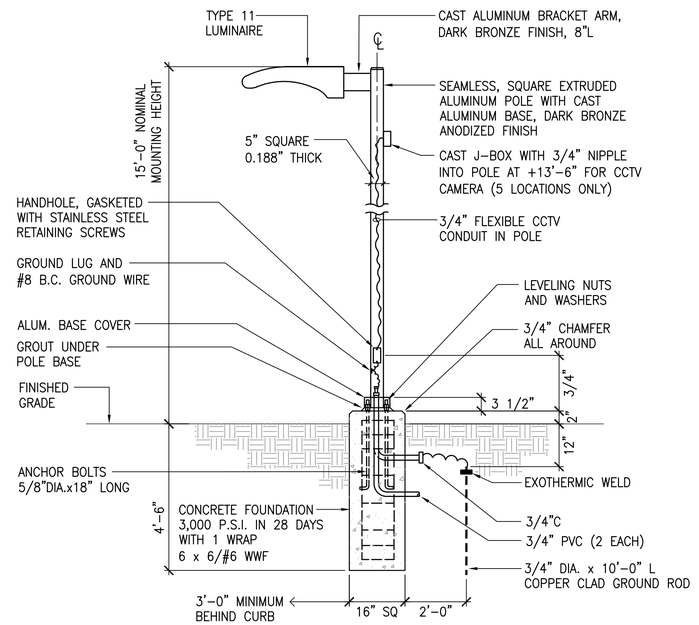

NOTE:

AREA LIGHT ASSEMBLY, INCLUDING POLE, LUMINAIRE AND FOUNDATION SHALL WITHSTAND WINDS UP TO 108MPH GUSTING WITHOUT PERMANENT DEFORMATION. (HAWAII)

D E0.5 **POLE LIGHT DETAIL**
NOT TO SCALE

REVISIONS
NO. . DATE . .

GLENN T. KARAMATSU ★ LICENSED PROFESSIONAL ENGINEER No. 4,368-E ★ HAWAII, U.S.A.
Expiration Date: 4/30/2014

THIS PROJECT WAS PREPARED BY ME OR UNDER MY SUPERVISION AND CONSTRUCTION OF THIS PROJECT WILL BE UNDER MY SUPERVISION.

KAKAAKO WORKFORCE HOUSING PER
SUBCHAPTER 4 OF 2011 MAUKA PLAN AND RULES
801 SOUTH STREET
HONOLULU, HAWAII
SITE ELECTRICAL DETAILS

KAZU YATO, AIA & ASSOCIATES, INC.
2033 ROUNDTOP TERRACE
HONOLULU, HI 96822
TEL: (808) 945-2040
FAX: (808) 955-3052

DATE | DRAWN: MC | CHECK: GK | FILE

SHEET
E0.5

11/5/12-8:46 Y:\001\001.528\001.528 E0.5 D05.dwg

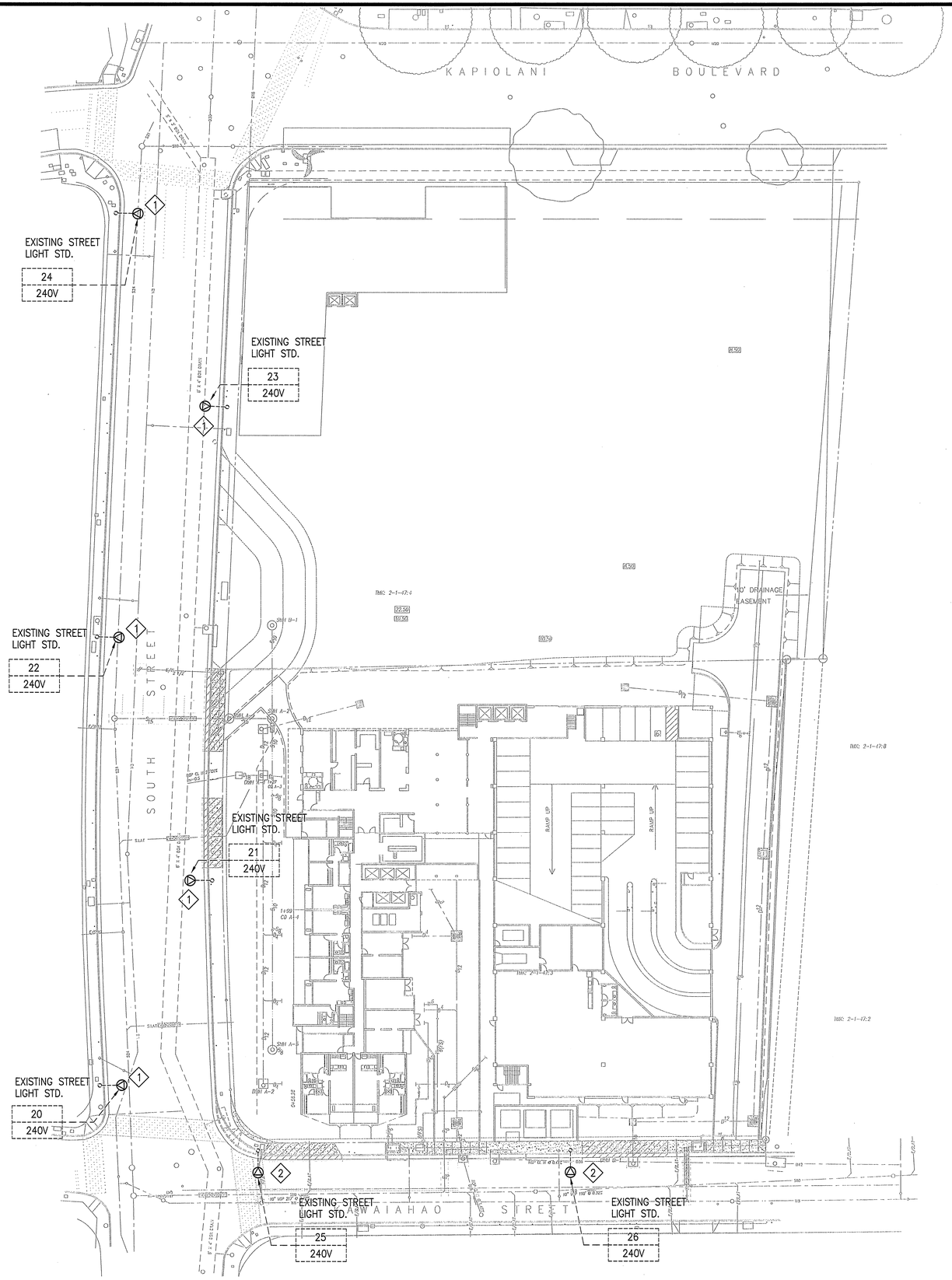

WORK NOTES:

1. REPLACE EXISTING COBRAHEAD DROP LENS STREET LIGHT LUMINAIRE WITH NEW FULL CUTOFF, 250W HPS LUMINAIRE WITH TWISTLOCK PHOTOCELL, 240V HPF BALLAST, GE M-250R2 #MRC2 25S-8H-2-GMC2, WITH LAMP.
2. SIMILAR TO 1 ABOVE EXCEPT WITH GMC3 DISTRIBUTION.

APPROVED:

7/25/2013

CHIEF, MECHANICAL/ELECTRICAL DIVISION
DEPARTMENT OF DESIGN AND CONSTRUCTION
CITY AND COUNTY OF HONOLULU
(FOR STREET LIGHT WORK ONLY)

DATE

7/27/13

CHIEF, TRAFFIC REVIEW BRANCH
DEPARTMENT OF PLANNING AND PERMITTING
CITY AND COUNTY OF HONOLULU

DATE

1 / E0.6 **STREET LIGHTING SITE PLAN**
SCALE: 1" = 30'

GRAPHIC SCALE

30' 15' 0' 30' 60' 90'

1" = 30'

REVISIONS

NO.	DATE	

GLENN T. KARAMATSU
LICENSED PROFESSIONAL ENGINEER
No. 4368-E
HAWAII, U.S.A.
Expiration Date: 4/30/2014

THIS PROJECT WAS PREPARED BY ME OR UNDER MY SUPERVISION AND CONSTRUCTION OF THIS PROJECT WILL BE UNDER MY SUPERVISION.

Glenn Karamatsu

KAKAAKO WORKFORCE HOUSING PER
SUBCHAPTER 4 OF 2011 MAUKA PLAN AND RULES
801 SOUTH STREET
HONOLULU, HAWAII
STREET LIGHTING SITE PLAN

KAZU YATO, AIA & ASSOCIATES, INC.
2033 ROUNDTOP TERRACE
HONOLULU, HI 96822
TEL: (808) 945-0040
FAX: (808) 955-0052

DATE	DRAWN	CHECK	FILE
JULY 2013	MC	GK	

SHEET

E0.6

7/24/13-8:13 Y:\001\001.528\001.528 E0.6.S03.dwg

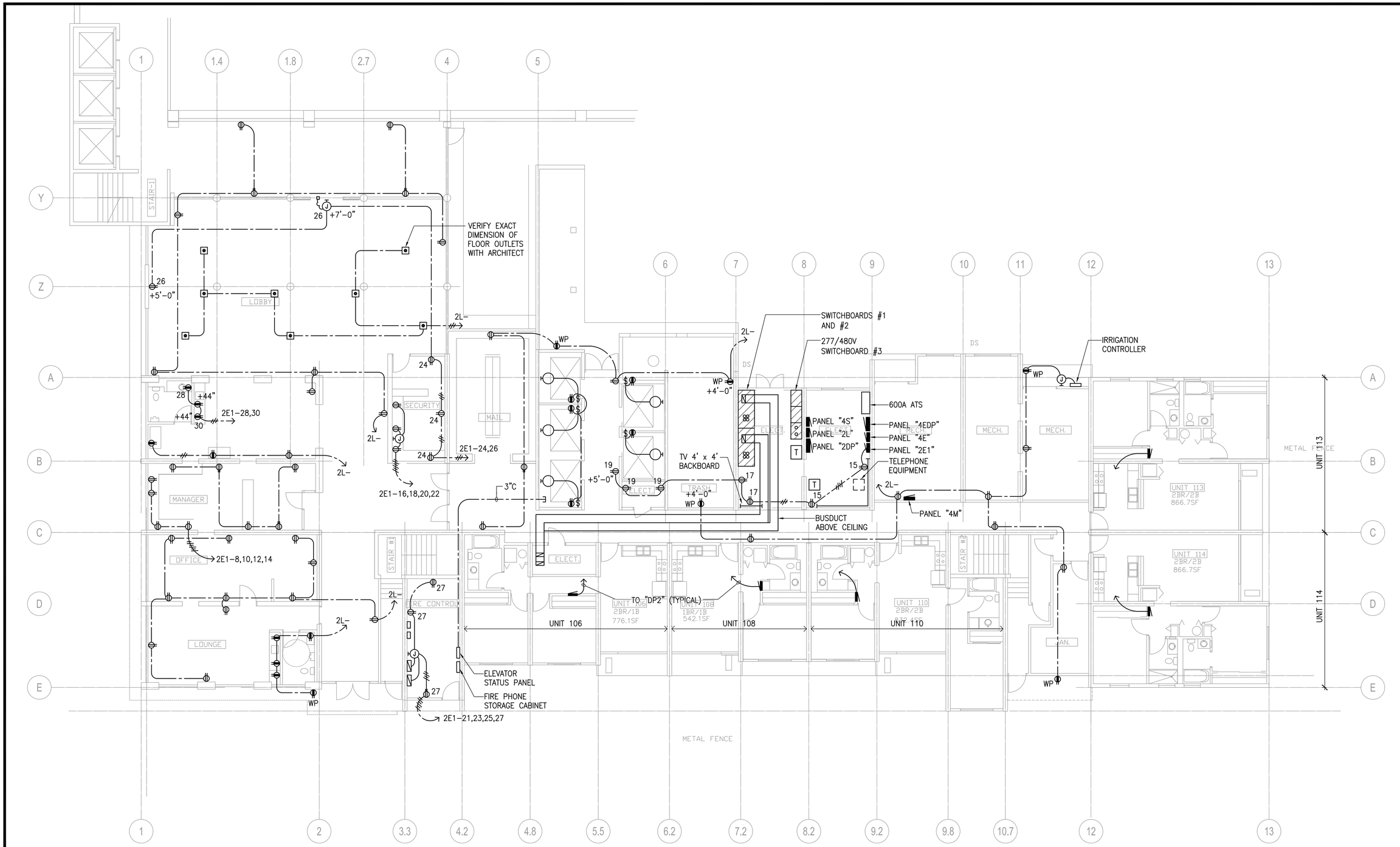

1 / E1.1 GROUND FLOOR POWER PLAN

SCALE: 1/8" = 1'-0"

GRAPHIC SCALE

5' 0 5' 10' 15' 20' 25' 30' 35' 40'

1/8" = 1'-0"

REVISIONS

NO.	DATE	
-	-	-

GLENN T. KARAMATSU LICENSED PROFESSIONAL ENGINEER No. 4368-E HAWAII, U.S.A.

Expiration Date: 4/30/2014

THIS PROJECT WAS PREPARED BY ME OR UNDER MY SUPERVISION AND CONSTRUCTION OF THIS PROJECT WILL BE UNDER MY SUPERVISION.

KAKAAKO WORKFORCE HOUSING PER SUBCHAPTER 4 OF 2011 MAUKA PLAN AND RULES

801 SOUTH STREET
HONOLULU, HAWAII

GROUND FLOOR POWER PLAN

KAZU YATO, AIA & ASSOCIATES, INC.

2033 ROUNDTOP TERRACE
HONOLULU, HI 96822

TEL: (808) 945-0040
FAX: (808) 955-0052

DATE	DRAWN	CHECK	FILE
	MC	GK	

SHEET

E1.1

11/5/12-8:46 Y:\001\001.528\001.528 E1.1.P01.dwg

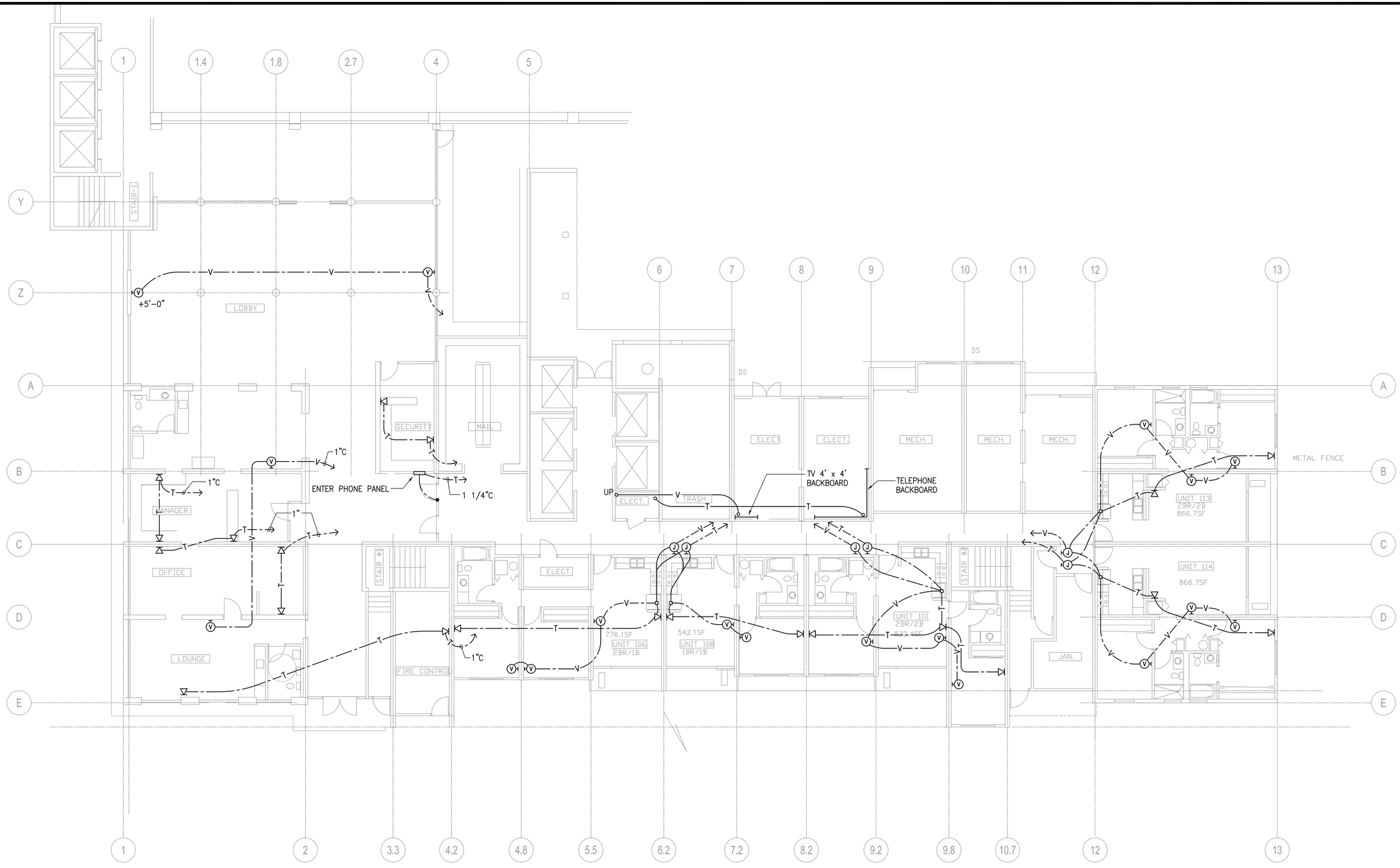

1 / E1.2 GROUND FLOOR TELECOMMUNICATIONS PLAN

SCALE: 1/8" = 1'-0"

GRAPHIC SCALE

5' 0 5' 10' 15' 20' 25' 30' 35' 40'

1/8" = 1'-0"

REVISIONS

NO.	DATE	
.	.	.

GLENN T. KARAMATSU
LICENSED PROFESSIONAL ENGINEER
No. 4368-E
HAWAII, U.S.A.
Expiration Date: 4/30/2014

THIS PROJECT WAS PREPARED BY ME OR UNDER MY SUPERVISION AND CONSTRUCTION OF THIS PROJECT WILL BE UNDER MY SUPERVISION.

KAKAAKO WORKFORCE HOUSING PER SUBCHAPTER 4 OF 2011 MAUKA PLAN AND RULES

801 SOUTH STREET
HONOLULU, HAWAII

GROUND FLOOR TELECOMMUNICATIONS PLAN

KAZU YATO, AIA & ASSOCIATES,INC.
2033 ROUNDTOP TERRACE
HONOLULU, HI 96822
TEL: (808) 945-2040
FAX: (808) 955-3052

DATE	DRAWN	CHECK	FILE
	WC	GK	

SHEET

E1.2

11/5/12-8:46 Y:\001\001.528\001.528 E1.2 TC01.dwg

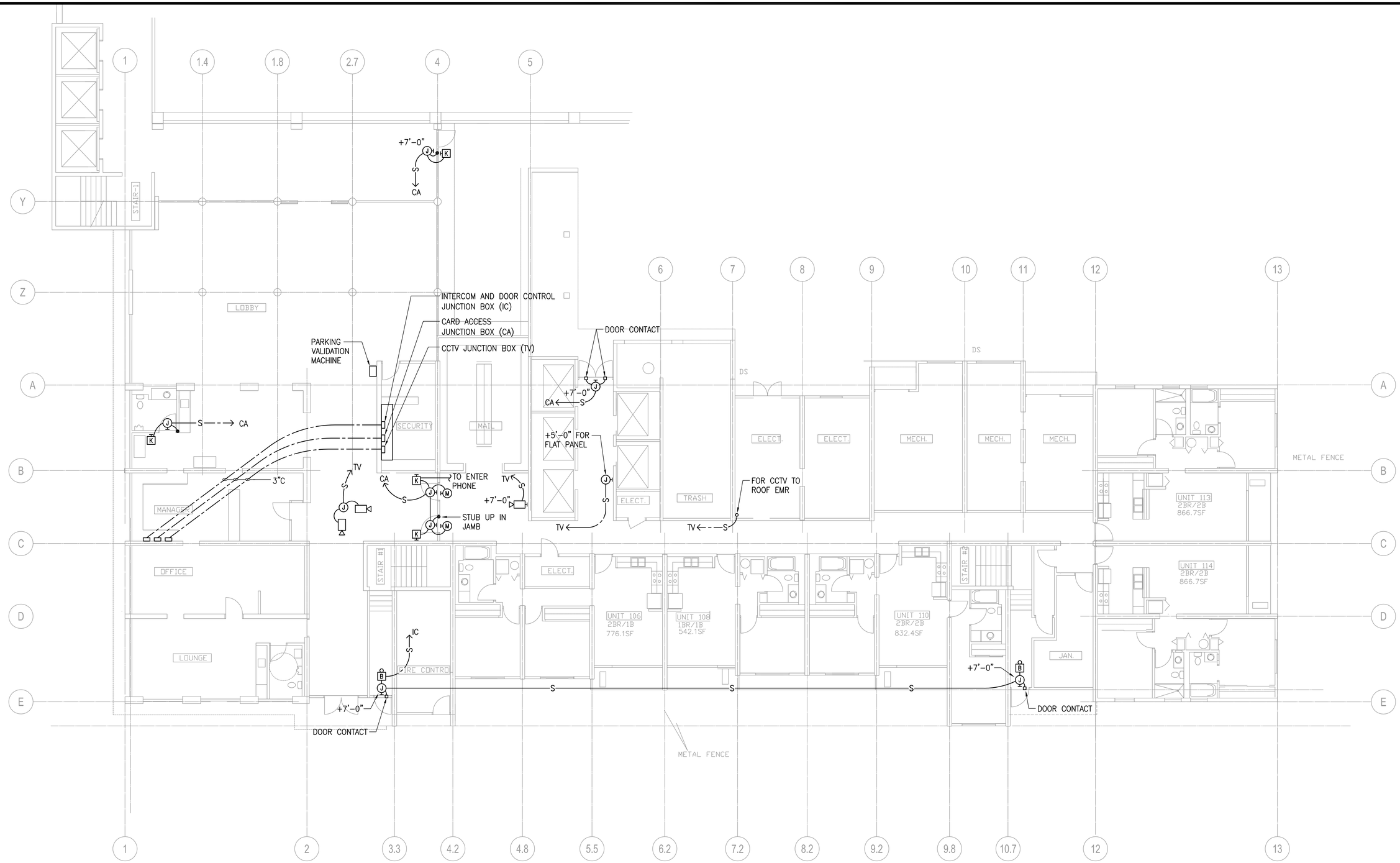

1 / E1.3 GROUND FLOOR SECURITY PLAN

SCALE: 1/8" = 1'-0"

GRAPHIC SCALE

5' 0 5' 10' 15' 20' 25' 30' 35' 40'

1/8" = 1'-0"

NO.	DATE	REVISIONS
.	.	.

GLENN T. KARAMATSU — LICENSED PROFESSIONAL ENGINEER — No. 4,368-E — HAWAII, U.S.A.

Expiration Date: 4/30/2014

THIS PROJECT WAS PREPARED BY ME OR UNDER MY SUPERVISION AND CONSTRUCTION OF THIS PROJECT WILL BE UNDER MY SUPERVISION.

KAKAAKO WORKFORCE HOUSING PER SUBCHAPTER 4 OF 2011 MAUKA PLAN AND RULES

801 SOUTH STREET
HONOLULU, HAWAII

GROUND FLOOR SECURITY PLAN

KAZU YATO, AIA & ASSOCIATES, INC.
2033 ROOKSTOP TERRACE
HONOLULU, HI 96822
TEL: (808) 945-0040
FAX: (808) 955-0002

DATE	DRAWN	CHECK	FILE
	MC	GK	

SHEET

E1.3

11/5/12-8:46 Y:\001\001.528\001.528 E1.3 SEC01.dwg

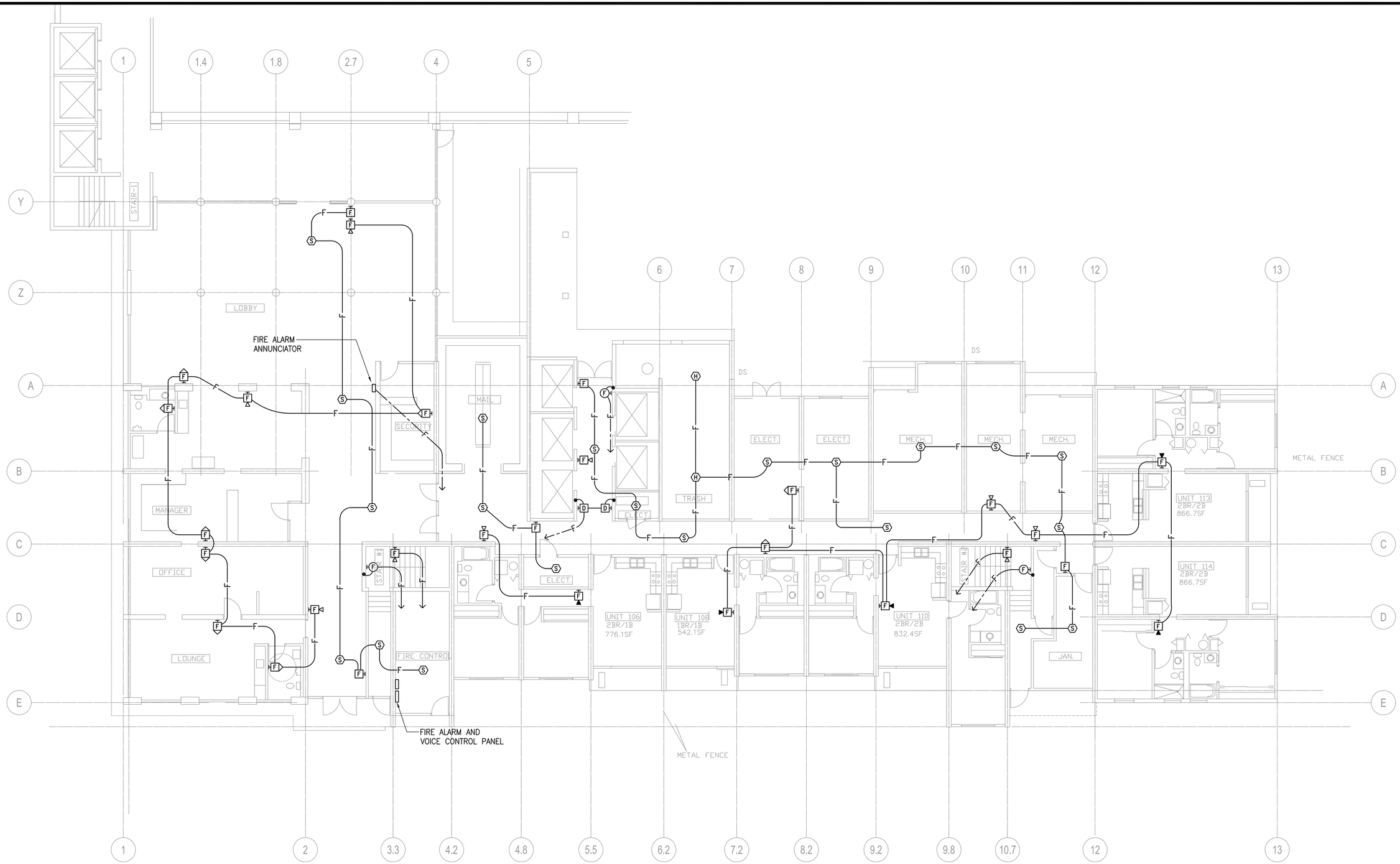

1 E1.4 GROUND FLOOR FIRE ALARM PLAN
SCALE: 1/8" = 1'-0"

GRAPHIC SCALE
5' 0 5' 10' 15' 20' 25' 30' 35' 40'
1/8" = 1'-0"

NO.	DATE	REVISIONS
.	.	.

GLENN T. KARAMATSU ★ LICENSED PROFESSIONAL ENGINEER No. 4368-E ★ HAWAII, U.S.A.
Expiration Date: 4/30/2014

THIS PROJECT WAS PREPARED BY ME OR UNDER MY SUPERVISION AND CONSTRUCTION OF THIS PROJECT WILL BE UNDER MY SUPERVISION.

KAKAAKO WORKFORCE HOUSING PER
SUBCHAPTER 4 OF 2011 MAUKA PLAN AND RULES
801 SOUTH STREET
HONOLULU, HAWAII
GROUND FLOOR FIRE ALARM PLAN

KAZU YATO, AIA & ASSOCIATES, INC.
2033 ROOKOOP TERRACE
HONOLULU, HI 96822
TEL: (808) 945-0040
FAX: (808) 955-0052

DATE	DRAWN	CHECK	FILE
	MC	GK	

SHEET
E1.4

11/5/12-8:45 Y:\001\001.528\001.528 E1.4 FA01.dwg

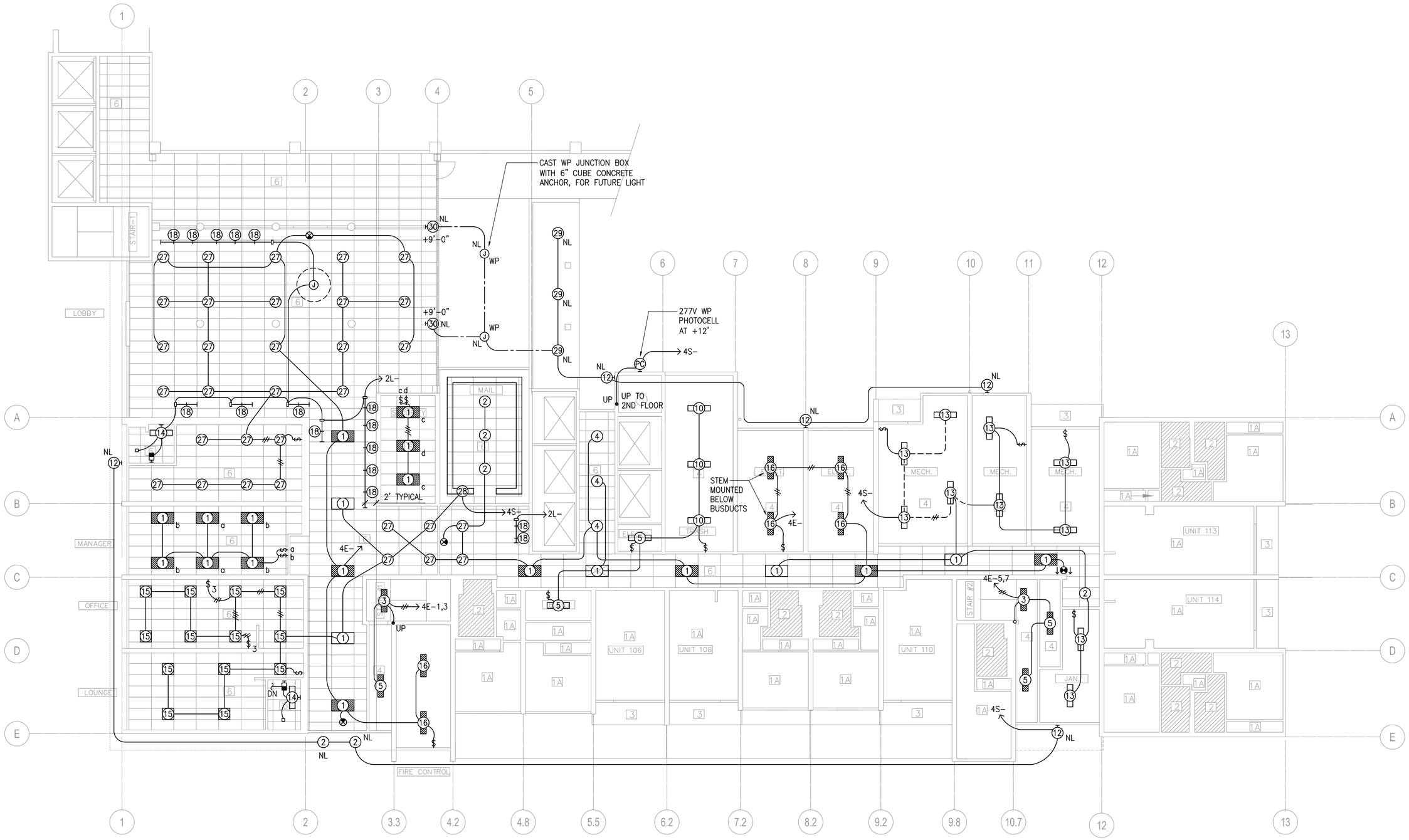

1 GROUND FLOOR LIGHTING PLAN
E1.5
SCALE: 1/8" = 1'-0"

GRAPHIC SCALE

5' 0 5' 10' 15' 20' 25' 30' 35' 40'

1/8" = 1'-0"

REVISIONS

NO.	DATE	
.	.	.

GLENN T. KARAMATSU
LICENSED PROFESSIONAL ENGINEER
No. 4368-E
HAWAII, U.S.A.
Expiration Date: 4/30/2014

THIS PROJECT WAS PREPARED BY ME OR UNDER MY SUPERVISION AND CONSTRUCTION OF THIS PROJECT WILL BE UNDER MY SUPERVISION.

KAKAAKO WORKFORCE HOUSING PER
SUBCHAPTER 4 OF 2011 MAUKA PLAN AND RULES

801 SOUTH STREET
HONOLULU, HAWAII

GROUND FLOOR LIGHTING PLAN

KAZU YATO, AIA & ASSOCIATES, INC.
2033 ROUNDTOP TERRACE
HONOLULU, HI 96822
TEL: (808) 945-0040
FAX: (808) 955-0052

DATE	DRAWN	CHECK	FILE
	MC	GK	

SHEET

E1.5

11/5/12-8:45 Y:\001\001.528\001.528 E1.5 L01.dwg

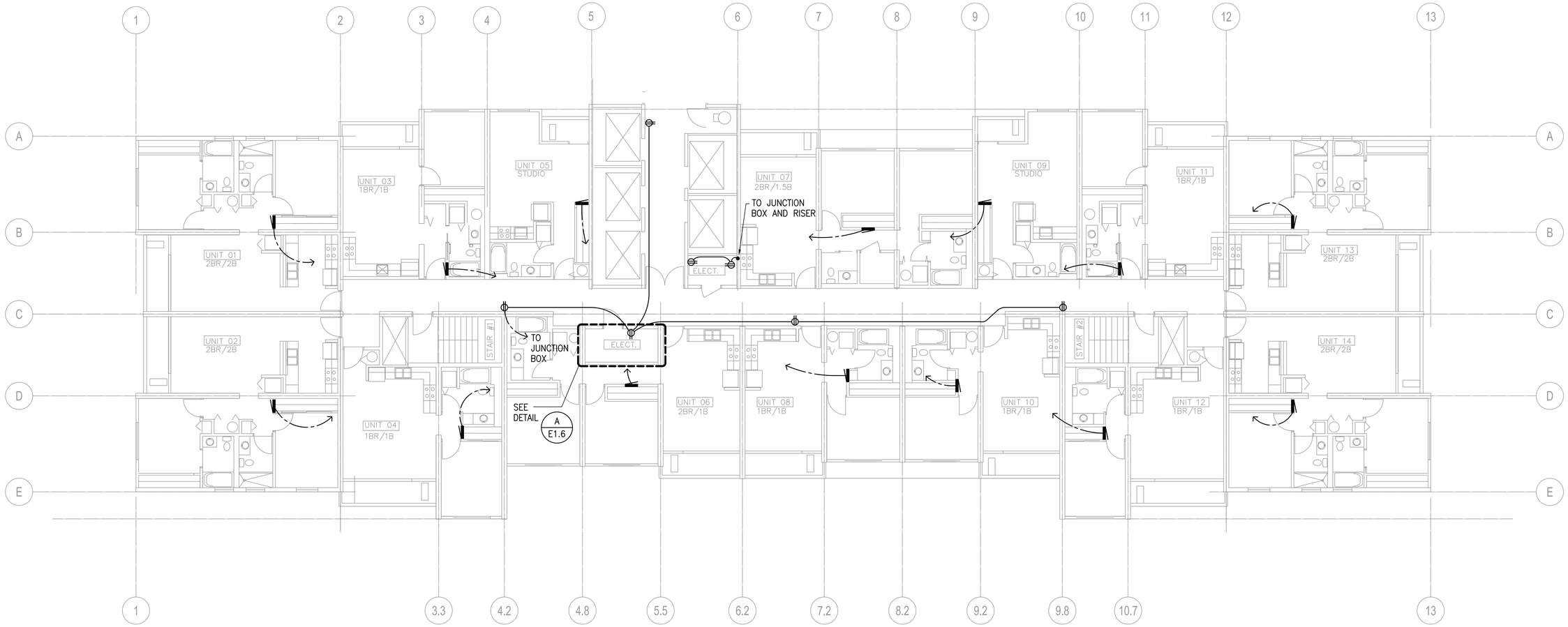

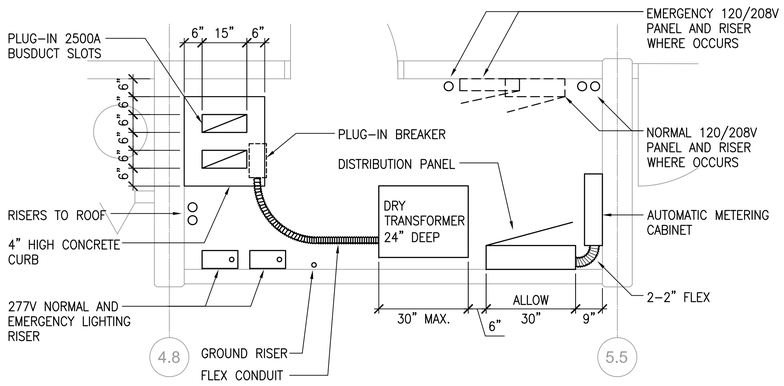

A E1.6 ENLARGED ELECTRIC ROOM
SCALE: 1/2" = 1'-0"

1 E1.6 2ND TO 8TH FLOOR POWER PLAN
SCALE: 1/8" = 1'-0"

GRAPHIC SCALE

5' 0 5' 10' 15' 20' 25' 30' 35' 40'
1/8" = 1'-0"

1' 0 1' 2' 3' 4' 5' 6' 7' 8' 9' 10'
1/2" = 1'-0"

NO.	DATE	REVISIONS
.	.	.

GLENN T. KARAMATSU
LICENSED PROFESSIONAL ENGINEER
No. 4368-E
HAWAII, U.S.A.
Expiration Date: 4/30/2014

THIS PROJECT WAS PREPARED BY ME OR UNDER MY SUPERVISION AND CONSTRUCTION OF THIS PROJECT WILL BE UNDER MY SUPERVISION.

KAKAAKO WORKFORCE HOUSING PER
SUBCHAPTER 4 OF 2011 MAUKA PLAN AND RULES

801 SOUTH STREET
HONOLULU, HAWAII

2ND TO 8TH FLOOR POWER PLAN

KAZU YATO, AIA & ASSOCIATES, INC.
2033 PRINCETON TERRACE
HONOLULU, HI 96822
TEL: (808) 945-0040
FAX: (808) 955-0022

DATE	DRAWN	CHECK	FILE
	MC	GK	

SHEET
E1.6

11/5/12-8:44 Y:\001\001.528\001.528 E1.6 P01.dwg

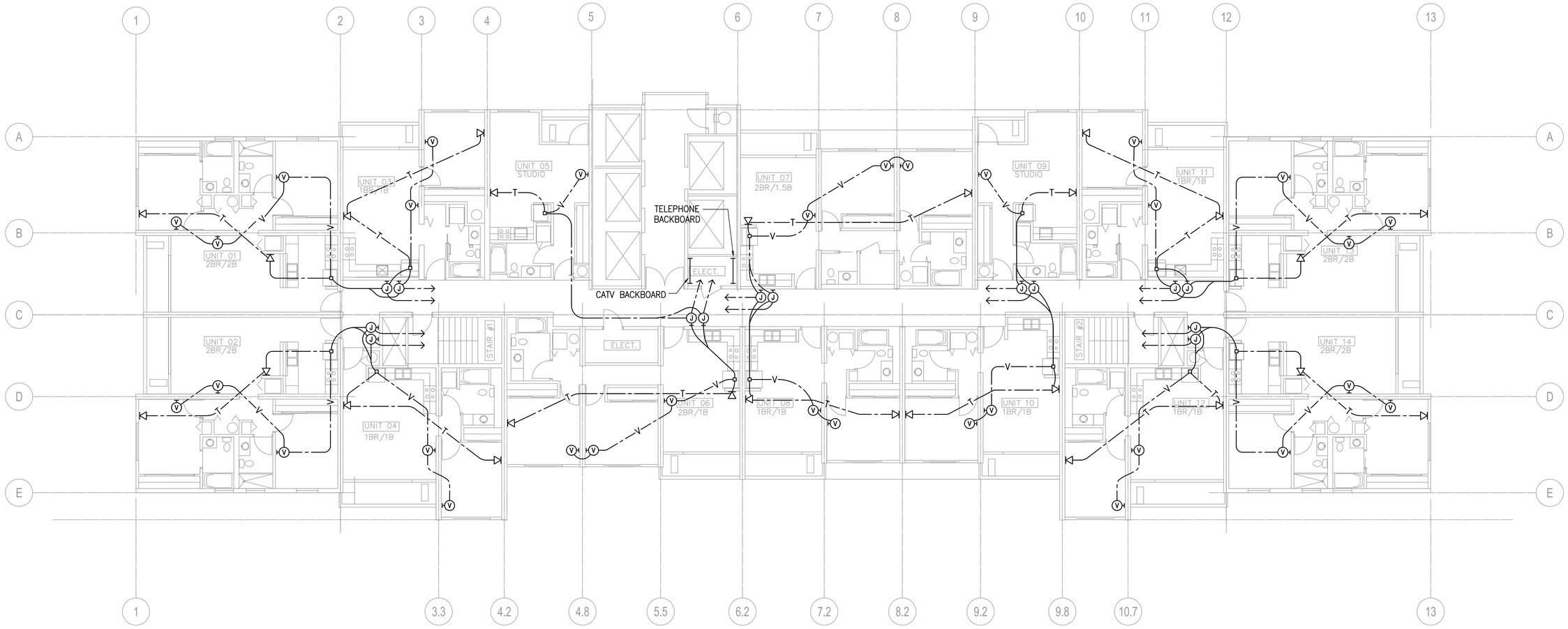

1 / E1.7 2ND TO 8TH FLOOR TELECOMMUNICATIONS PLAN

SCALE: 1/8" = 1'-0"

GRAPHIC SCALE

5' 0 5' 10' 15' 20' 25' 30' 35' 40'

1/8" = 1'-0"

REVISIONS

NO.	DATE	
.	.	.

GLENN T. KARAMATSU
LICENSED PROFESSIONAL ENGINEER
No. 4368-E
HAWAII, U.S.A.
Expiration Date: 4/30/2014

THIS PROJECT WAS PREPARED BY ME OR UNDER MY SUPERVISION AND CONSTRUCTION OF THIS PROJECT WILL BE UNDER MY SUPERVISION.

KAKAAKO WORKFORCE HOUSING PER
SUBCHAPTER 4 OF 2011 MAUKA PLAN AND RULES

801 SOUTH STREET
HONOLULU, HAWAII

2ND TO 8TH FLOOR TELECOMMUNICATIONS PLAN

KAZU YATO, AIA & ASSOCIATES, INC.
2033 ROUNDTOP TERRACE
HONOLULU, HI 96822
TEL: (808) 945-0040
FAX: (808) 955-0922

DATE	DRAWN	CHECK	FILE
	MC	GK	

SHEET

E1.7

11/5/12-8:44 Y:\001\001.528\001.528 E1.7.TC01.dwg

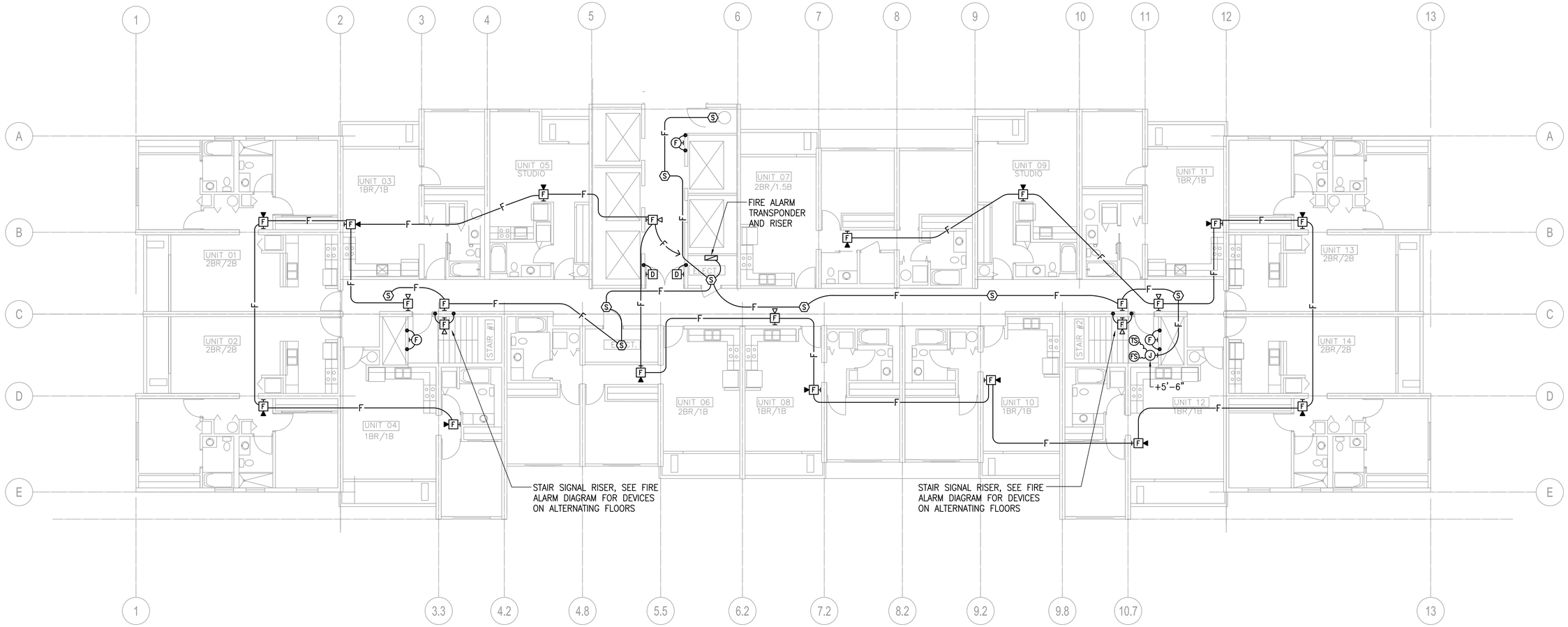

1 / E1.8 2ND TO 8TH FLOOR FIRE ALARM PLAN

SCALE: 1/8" = 1'-0"

GRAPHIC SCALE

5' 0 5' 10' 15' 20' 25' 30' 35' 40'

1/8" = 1'-0"

NO.	DATE	REVISIONS
.	.	.

GLENN T. KARAMATSU
LICENSED PROFESSIONAL ENGINEER
No. 4368-E
HAWAII, U.S.A.
Expiration Date: 4/30/2014

THIS PROJECT WAS PREPARED BY ME OR UNDER MY SUPERVISION AND CONSTRUCTION OF THIS PROJECT WILL BE UNDER MY SUPERVISION.

KAKAAKO WORKFORCE HOUSING PER SUBCHAPTER 4 OF 2011 MAUKA PLAN AND RULES

801 SOUTH STREET
HONOLULU, HAWAII

2ND TO 8TH FLOOR FIRE ALARM PLAN

KAZU YATO, AIA & ASSOCIATES, INC.
2033 ROUNDTOP TERRACE
HONOLULU, HI 96822
TEL: (808) 945-0040
FAX: (808) 955-0992

DATE	DRAWN	CHECK	FILE
	MC	GK	

SHEET

E1.8

11/5/12-8:44 Y:\001\001.528\001.528 E1.8 FA01.dwg

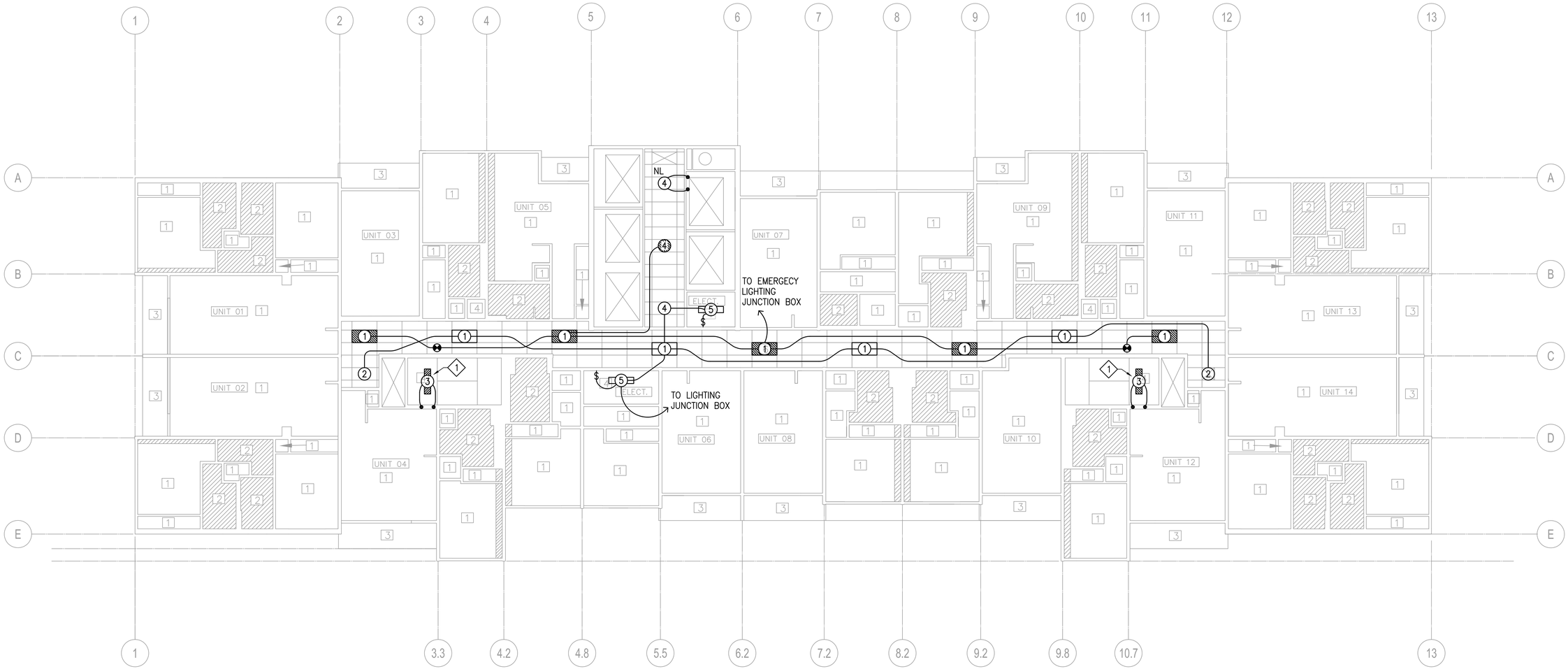

NOTE:

1 OCCUPANCY SENSOR ON THIS END OF LIGHT.

1 / E1.9 2ND TO 8TH FLOOR LIGHTING PLAN

SCALE: 1/8" = 1'-0"

GRAPHIC SCALE

5' 0 5' 10' 15' 20' 25' 30' 35' 40'

1/8" = 1'-0"

NO.	DATE	REVISIONS
.	.	.

GLENN T. KARAMATSU ★ LICENSED PROFESSIONAL ENGINEER No. 4368-E ★ HAWAII, U.S.A.

Expiration Date: 4/30/2014

THIS PROJECT WAS PREPARED BY ME OR UNDER MY SUPERVISION AND CONSTRUCTION OF THIS PROJECT WILL BE UNDER MY SUPERVISION.

KAKAAKO WORKFORCE HOUSING PER SUBCHAPTER 4 OF 2011 MAUKA PLAN AND RULES

801 SOUTH STREET
HONOLULU, HAWAII

2ND TO 8TH FLOOR LIGHTING PLAN

KAZU YATO, AIA & ASSOCIATES,INC.
2033 ROUNDTOP TERRACE
HONOLULU, HI 96822
TEL: (808) 946-0040
FAX: (808) 955-0002

DATE	DRAWN	CHECK	FILE
	MC	GK	

SHEET

E1.9

11/5/12-8:44 Y:\001\001.528\001.528 E1.9 L01.dwg

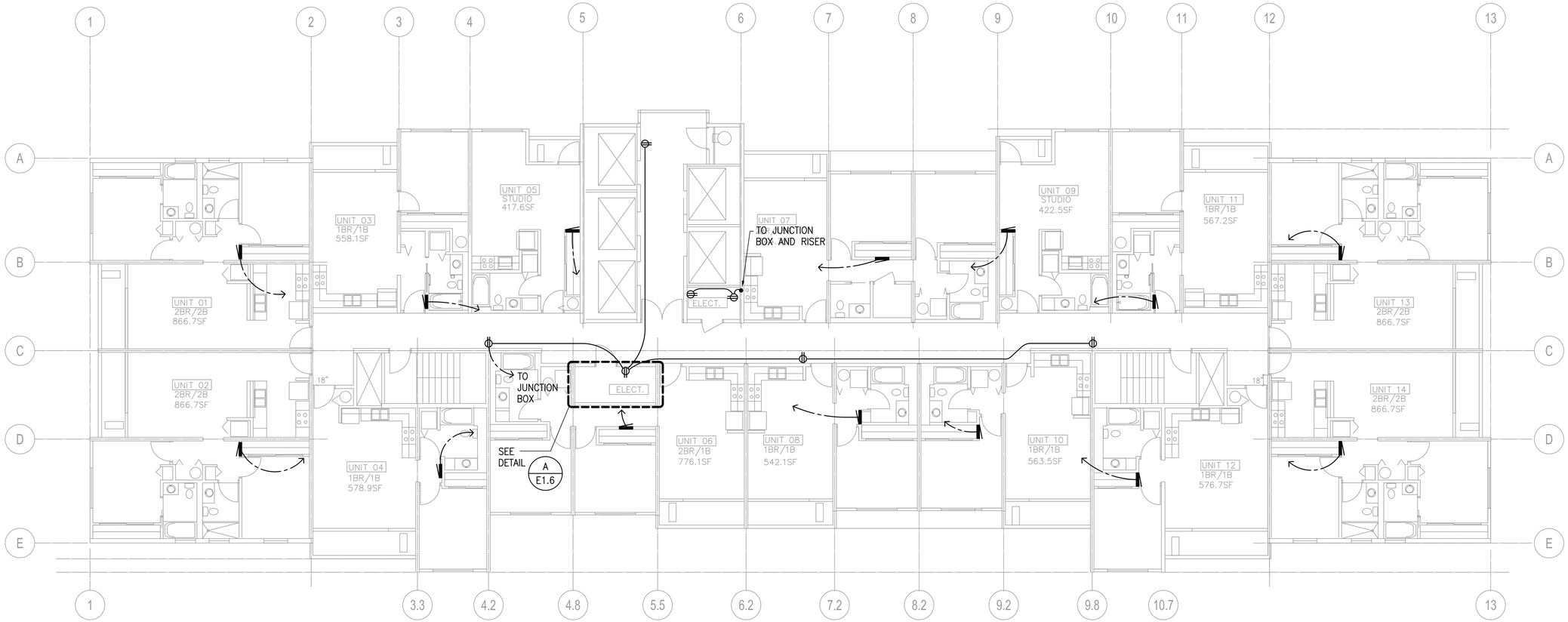

1 / E1.10 9TH TO 46TH FLOOR POWER PLAN

SCALE: 1/8" = 1'-0"

GRAPHIC SCALE

5' 0 5' 10' 15' 20' 25' 30' 35' 40'

1/8" = 1'-0"

11/5/12-8:43 Y:\001\001.528\001.528 E1.10-P02.dwg

REVISIONS

NO.	DATE	
.	.	.

GLENN T. KARAMATSU ★ LICENSED PROFESSIONAL ENGINEER No. 4368-E ★ HAWAII, U.S.A.

Expiration Date: 4/30/2014

THIS PROJECT WAS PREPARED BY ME OR UNDER MY SUPERVISION AND CONSTRUCTION OF THIS PROJECT WILL BE UNDER MY SUPERVISION.

KAKAAKO WORKFORCE HOUSING PER SUBCHAPTER 4 OF 2011 MAUKA PLAN AND RULES

801 SOUTH STREET
HONOLULU, HAWAII

9TH TO 46TH FLOOR POWER PLAN

KAZU YATO, AIA & ASSOCIATES, INC.
2033 ROUNDTOP TERRACE
HONOLULU, HI 96822
TEL: (808) 945-0040
FAX: (808) 955-0052

DATE	DRAWN	CHECK	FILE
	MC	GK	

SHEET

E1.10

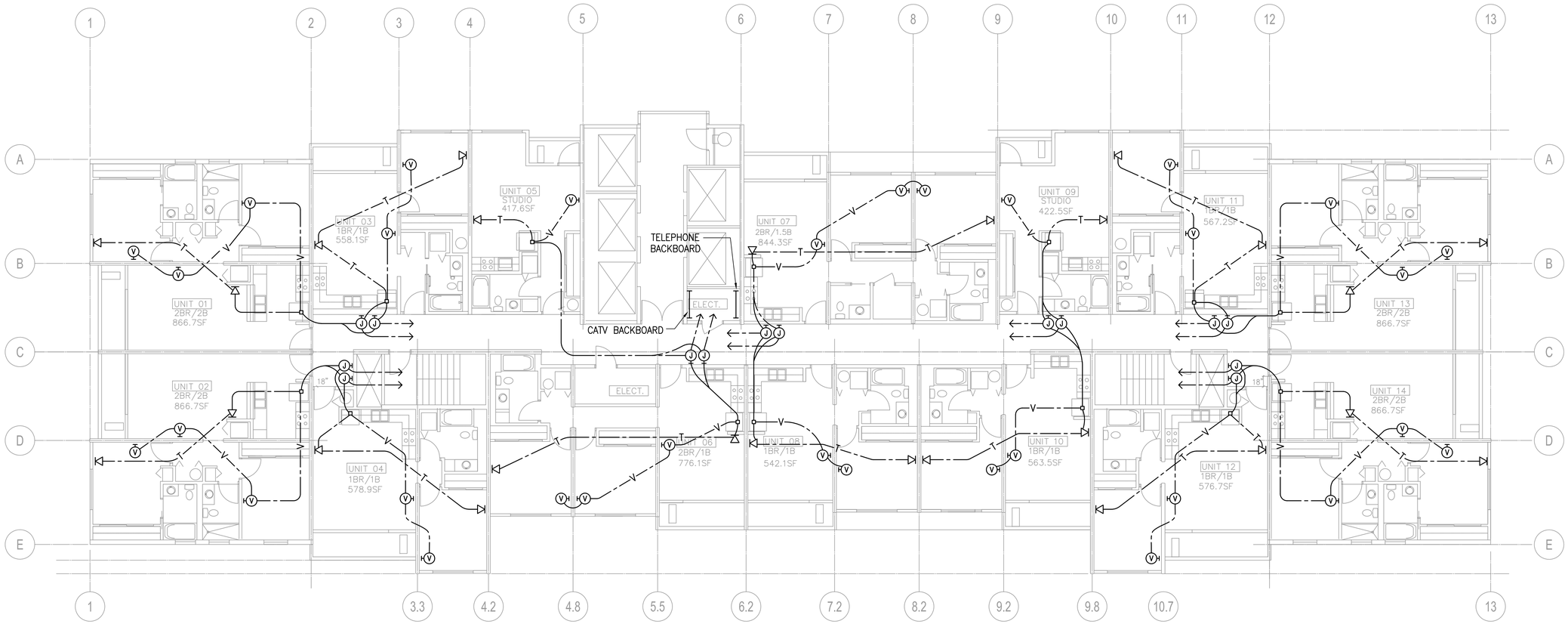

1 / E1.11 9TH TO 46TH FLOOR TELECOMMUNICATIONS PLAN

SCALE: 1/8" = 1'-0"

GRAPHIC SCALE

5' 0 5' 10' 15' 20' 25' 30' 35' 40'

1/8" = 1'-0"

NO.	DATE	REVISIONS
.	.	.

GLENN T. KARAMATSU ★ LICENSED PROFESSIONAL ENGINEER No. 4368-E ★ HAWAII, U.S.A.

Expiration Date: 4/30/2014

THIS PROJECT WAS PREPARED BY ME OR UNDER MY SUPERVISION AND CONSTRUCTION OF THIS PROJECT WILL BE UNDER MY SUPERVISION.

KAKAAKO WORKFORCE HOUSING PER SUBCHAPTER 4 OF 2011 MAUKA PLAN AND RULES

801 SOUTH STREET
HONOLULU, HAWAII

9TH TO 46TH FLOOR TELECOMMUNICATIONS PLAN

KAZU YATO, AIA & ASSOCIATES,INC.
2033 ROUNDTOP TERRACE
HONOLULU, HI 96822
TEL: (808) 945-0040
FAX: (808) 955-0052

DATE	DRAWN	CHECK	FILE
	WC	GK	

SHEET

E1.11

11/5/12-8:43 Y:\001\001.528\001.528 E1.11.TC02.dwg

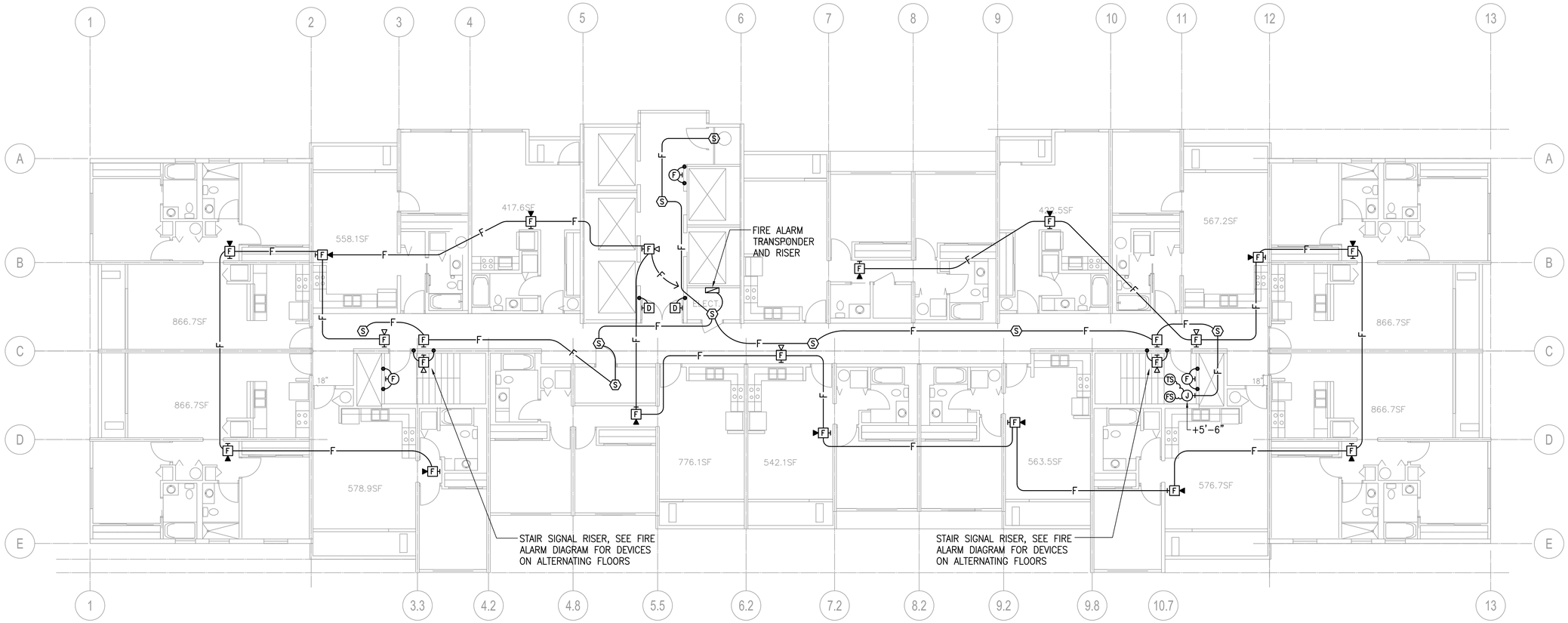

1/E1.12 9TH TO 46TH FLOOR FIRE ALARM PLAN

SCALE: 1/8" = 1'-0"

GRAPHIC SCALE

5' 0 5' 10' 15' 20' 25' 30' 35' 40'

1/8" = 1'-0"

REVISIONS

NO.	DATE	
.	.	.

GLENN T. KARAMATSU ★ LICENSED PROFESSIONAL ENGINEER No. 4368-E ★ HAWAII, U.S.A.

Expiration Date: 4/30/2014

THIS PROJECT WAS PREPARED BY ME OR UNDER MY SUPERVISION AND CONSTRUCTION OF THIS PROJECT WILL BE UNDER MY SUPERVISION.

KAKAAKO WORKFORCE HOUSING PER SUBCHAPTER 4 OF 2011 MAUKA PLAN AND RULES

801 SOUTH STREET
HONOLULU, HAWAII

9TH TO 46TH FLOOR FIRE ALARM PLAN

KAZU YATO, AIA & ASSOCIATES, INC.
2033 ROOFTOP TERRACE
HONOLULU, HI 96822
TEL: (808) 945-0040
FAX: (808) 955-0022

DATE	DRAWN	CHECK	FILE
	MC	GK	

SHEET

E1.12

11/5/12-8:43 Y:\001\001.528\001.528 E1.12.F02.dwg

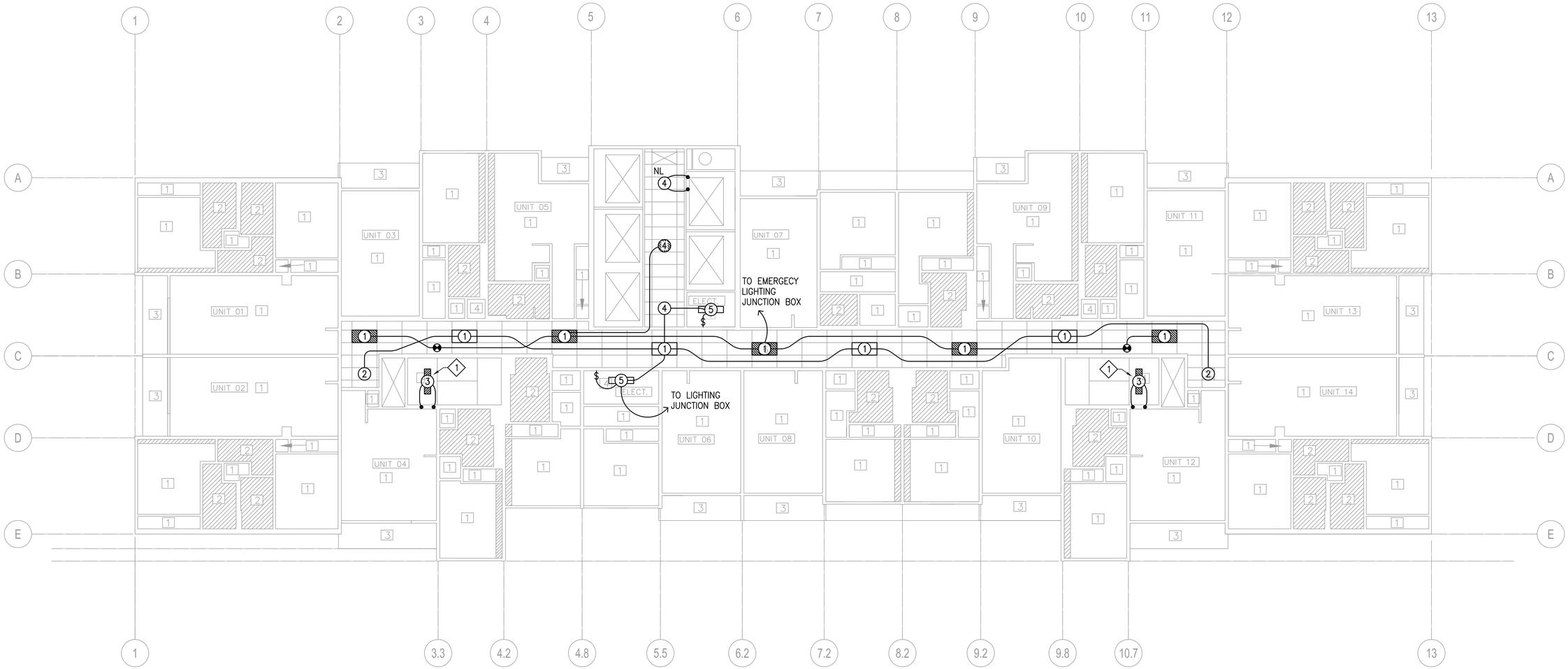

NOTE:

1 OCCUPANCY SENSOR ON THIS END OF LIGHT.

1 E1.13 9TH TO 46TH FLOOR LIGHTING PLAN

SCALE: 1/8" = 1'-0"

GRAPHIC SCALE

5' 0 5' 10' 15' 20' 25' 30' 35' 40'

1/8" = 1'-0"

NO.	DATE	REVISIONS
.	.	.

GLENN T. KARAMATSU
LICENSED PROFESSIONAL ENGINEER
No. 4368-E
HAWAII, U.S.A.
Expiration Date: 4/30/2014

THIS PROJECT WAS PREPARED BY ME OR UNDER MY SUPERVISION AND CONSTRUCTION OF THIS PROJECT WILL BE UNDER MY SUPERVISION.

KAKAAKO WORKFORCE HOUSING PER
SUBCHAPTER 4 OF 2011 MAUKA PLAN AND RULES

801 SOUTH STREET
HONOLULU, HAWAII

9TH TO 46TH FLOOR LIGHTING PLAN

KAZU YATO, AIA & ASSOCIATES,INC.
2033 ROUNDTOP TERRACE
HONOLULU, HI 96822
TEL: (808) 946-0040
FAX: (808) 955-0002

DATE	DRAWN	CHECK	FILE
	MC	GK	

SHEET

E1.13

11/5/12-8:43 Y:\001\001.528\001.528 E1.13.101.dwg

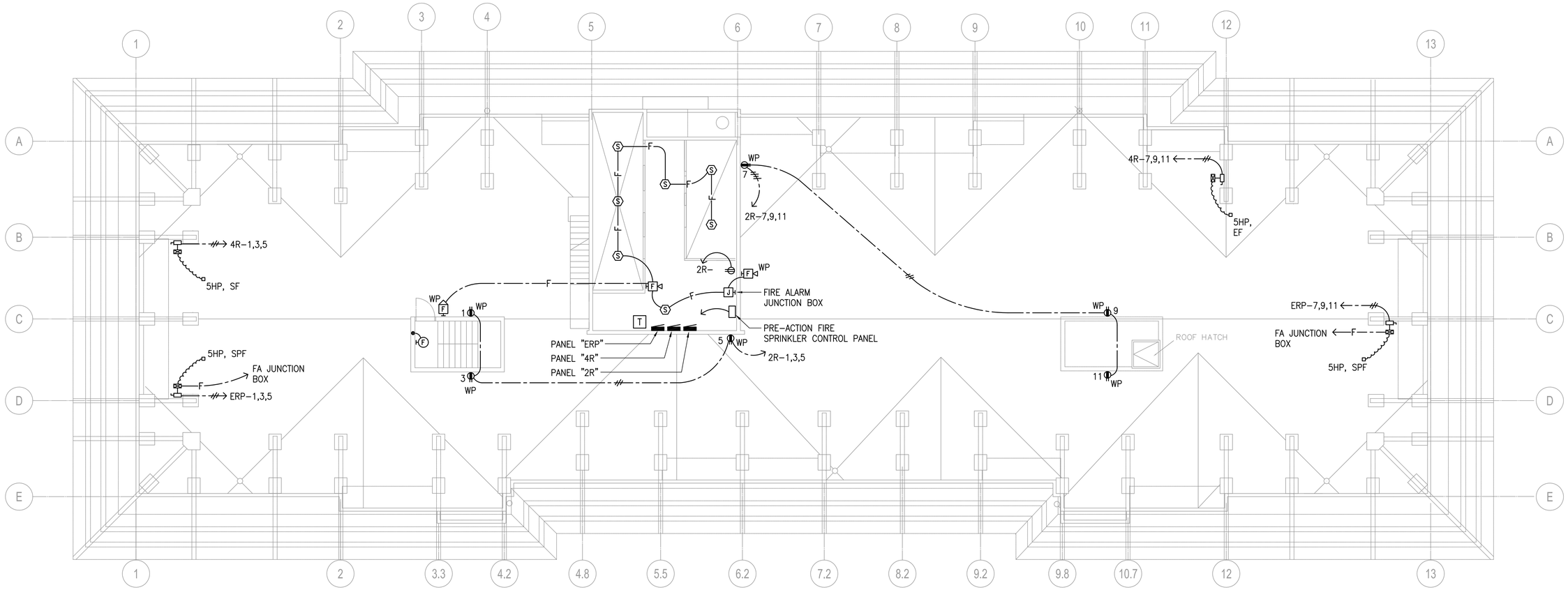

1 ROOF POWER AND SIGNAL PLAN
E1.14 SCALE: 1/8" = 1'-0"

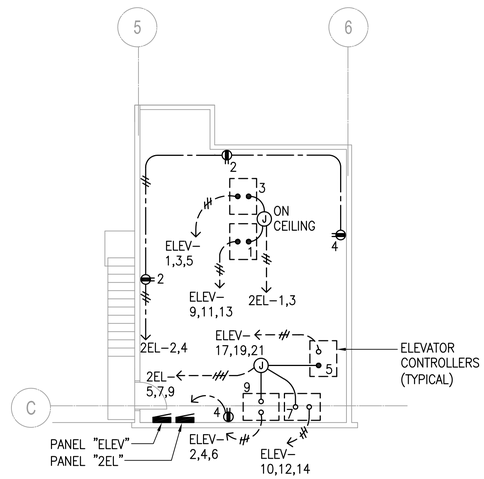

ELEVATOR MACHINE ROOM POWER PLAN
SCALE: 1/8" = 1'-0"

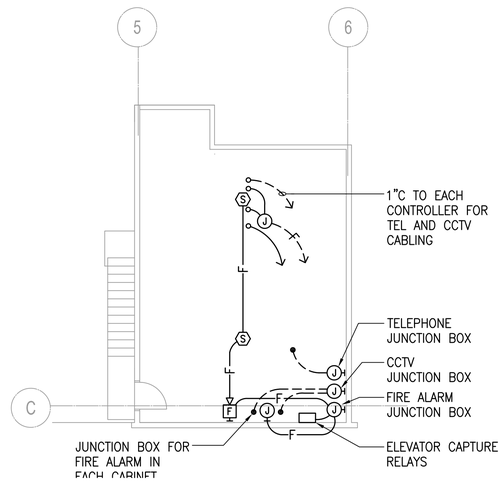

ELEVATOR MACHINE ROOM SIGNAL PLAN
SCALE: 1/8" = 1'-0"

GRAPHIC SCALE

5' 0 5' 10' 15' 20' 25' 30' 35' 40'

1/8" = 1'-0"

NO.	DATE	REVISIONS
.	.	.

GLENN T. KARAMATSU ★ LICENSED PROFESSIONAL ENGINEER No. 4368-E ★ HAWAII, U.S.A.
Expiration Date: 4/30/2014

THIS PROJECT WAS PREPARED BY ME OR UNDER MY SUPERVISION AND CONSTRUCTION OF THIS PROJECT WILL BE UNDER MY SUPERVISION.

KAKAAKO WORKFORCE HOUSING PER SUBCHAPTER 4 OF 2011 MAUKA PLAN AND RULES

801 SOUTH STREET
HONOLULU, HAWAII

ROOF POWER AND SIGNAL PLAN

KAZU YATO, AIA & ASSOCIATES, INC.
2033 ROUND TOP TERRACE
HONOLULU, HI 96822
TEL: (808) 945-0040
FAX: (808) 955-0052

DATE	DRAWN	CHECK	FILE
	MC	GK	

SHEET

E1.14

11/5/12-8:43 Y:\001\001.528\001.528 E1.14-P01.dwg

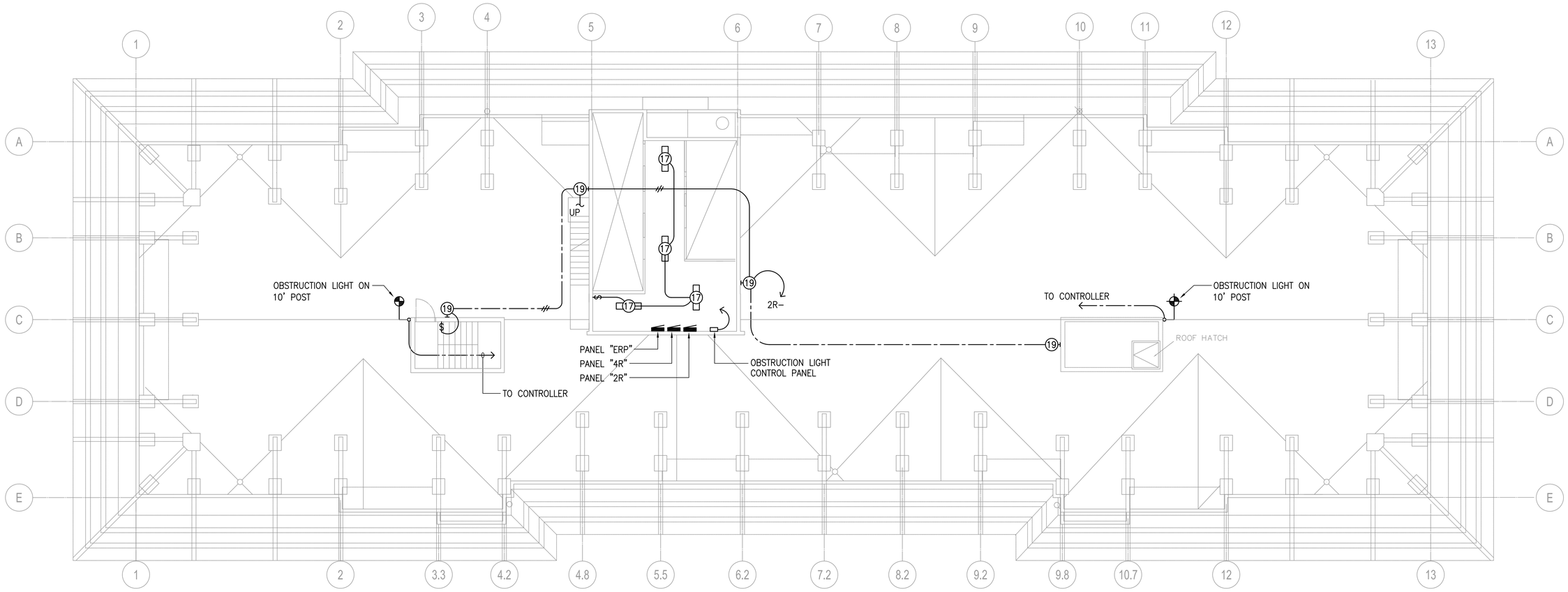

1 / E1.15 ROOF LIGHTING PLAN

SCALE: 1/8" = 1'–0"

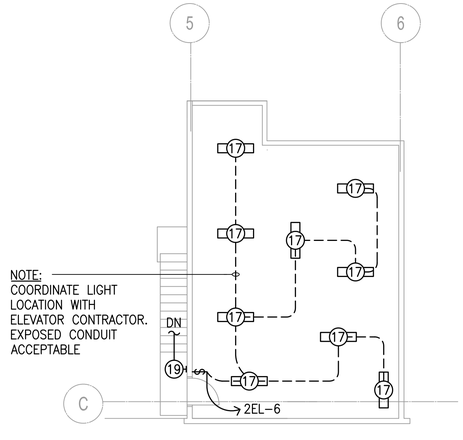

ELEVATOR MACHINE ROOM LIGHTING PLAN

SCALE: 1/8" = 1'–0"

GRAPHIC SCALE

5' 0 5' 10' 15' 20' 25' 30' 35' 40'

1/8" = 1'–0"

NO.	DATE	REVISIONS
.	.	.

GLENN T. KARAMATSU
LICENSED PROFESSIONAL ENGINEER
No. 4368–E
HAWAII, U.S.A.
Expiration Date: 4/30/2014

THIS PROJECT WAS PREPARED BY ME OR UNDER MY SUPERVISION AND CONSTRUCTION OF THIS PROJECT WILL BE UNDER MY SUPERVISION.

KAKAAKO WORKFORCE HOUSING PER
SUBCHAPTER 4 OF 2011 MAUKA PLAN AND RULES

801 SOUTH STREET
HONOLULU, HAWAII

ROOF LIGHTING PLAN

KAZU YATO, AIA & ASSOCIATES, INC.
2033 ROUNDTOP TERRACE
HONOLULU, HI 96822
TEL: (808) 945–0040
FAX: (808) 955–0052

DATE	DRAWN	CHECK	FILE
	MC	GK	

SHEET

E1.15

11/5/12–8:42 Y:\001\001.528\001.528 E1.15.L01.dwg

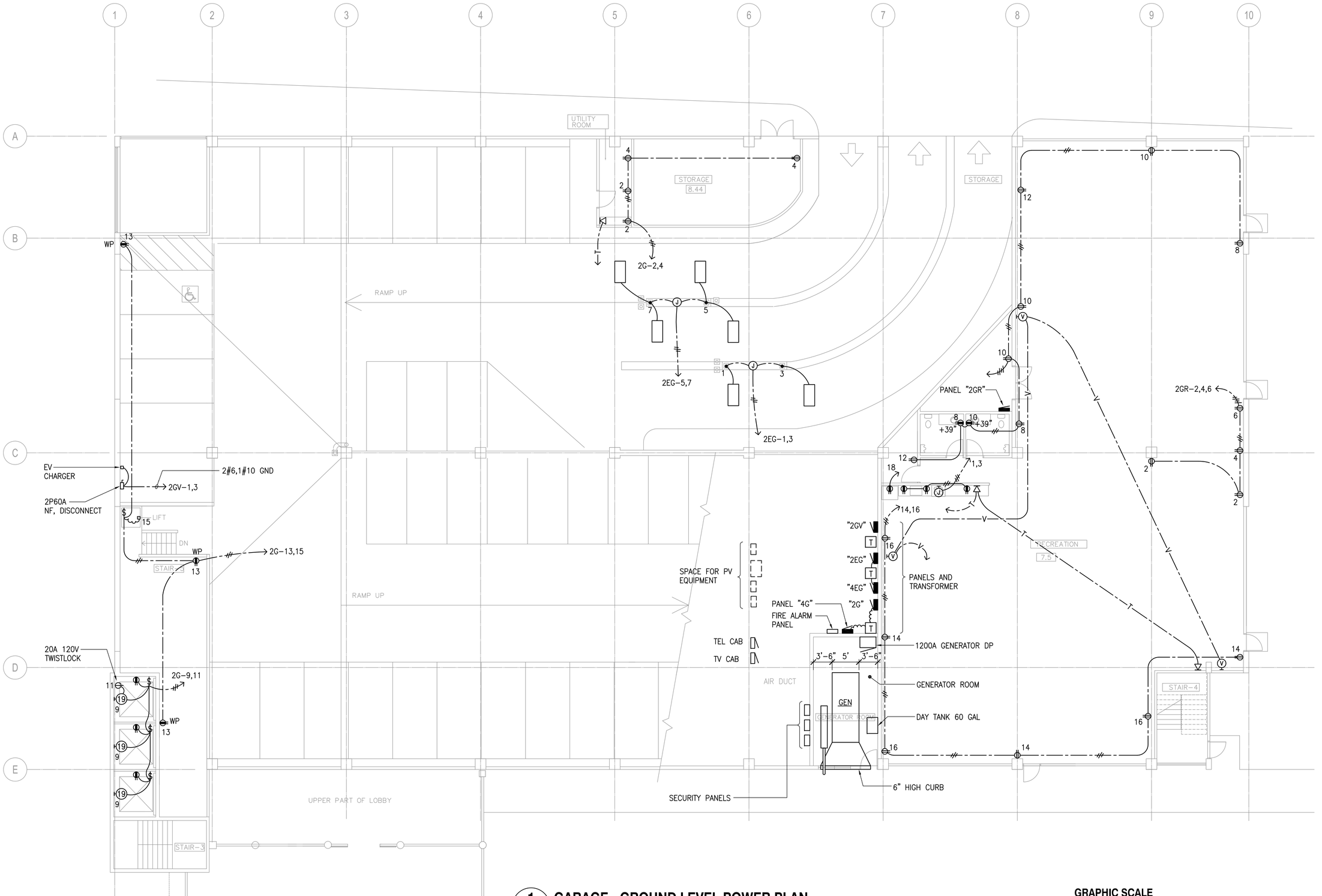

1 / E2.1 GARAGE - GROUND LEVEL POWER PLAN

SCALE: 1/8" = 1'-0"

GRAPHIC SCALE

5' 0 5' 10' 15' 20' 25' 30' 35' 40'

1/8" = 1'-0"

NO.	DATE	REVISIONS
.	.	.

GLENN T. KARAMATSU ★ LICENSED PROFESSIONAL ENGINEER No. 4368-E ★ HAWAII, U.S.A.
Expiration Date: 4/30/2014

THIS PROJECT WAS PREPARED BY ME OR UNDER MY SUPERVISION AND CONSTRUCTION OF THIS PROJECT WILL BE UNDER MY SUPERVISION.

KAKAAKO WORKFORCE HOUSING
SUBCHAPTER 4 OF 2011 MAUKA PLAN AND RULES PER

801 SOUTH STREET
HONOLULU, HAWAII

GARAGE - GROUND LEVEL POWER PLAN

KAZU YATO, AIA & ASSOCIATES,INC.
2033 ROUNDTOP TERRACE
HONOLULU, HI 96822
TEL: (808) 945-0040
FAX: (808) 955-0022

DATE	DRAWN	CHECK	FILE
	MC	GK	

SHEET

E2.1

11/5/12-8:42 Y:\001\001.528\001.528 E2.1.GP01.dwg

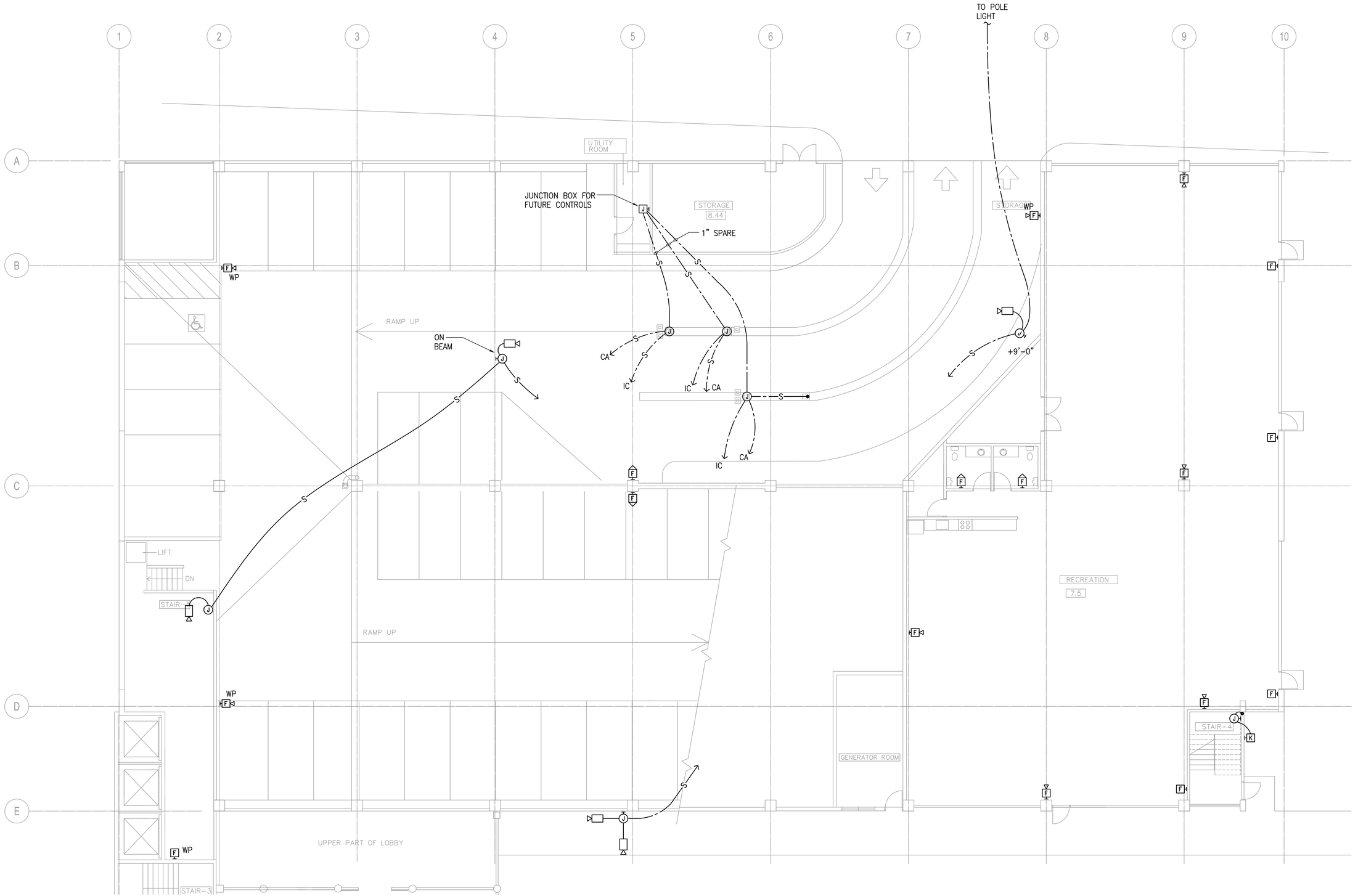

1 E2.2 GARAGE - GROUND LEVEL FIRE ALARM PLAN

SCALE: 1/8" = 1'-0"

GRAPHIC SCALE

5' 0 5' 10' 15' 20' 25' 30' 35' 40'

1/8" = 1'-0"

REVISIONS

NO.	DATE	
.	.	.

GLENN T. KARAMATSU — LICENSED PROFESSIONAL ENGINEER — No. 4368-E — HAWAII, U.S.A. — Expiration Date: 4/30/2014

THIS PROJECT WAS PREPARED BY ME OR UNDER MY SUPERVISION AND CONSTRUCTION OF THIS PROJECT WILL BE UNDER MY SUPERVISION.

KAKAAKO WORKFORCE HOUSING PER SUBCHAPTER 4 OF 2011 MAUKA PLAN AND RULES

801 SOUTH STREET
HONOLULU, HAWAII

GARAGE - GROUND LEVEL FIRE ALARM PLAN

KAZU YATO, AIA & ASSOCIATES, INC.
2033 ROOSEVELT TERRACE
HONOLULU, HI 96822
TEL: (808) 945-0040
FAX: (808) 955-0092

DATE	DRAWN	CHECK	FILE
	MC	GK	

SHEET

E2.2

11/5/12-8:42 Y:\001\001.528\001.528 E2.2.GF01.dwg

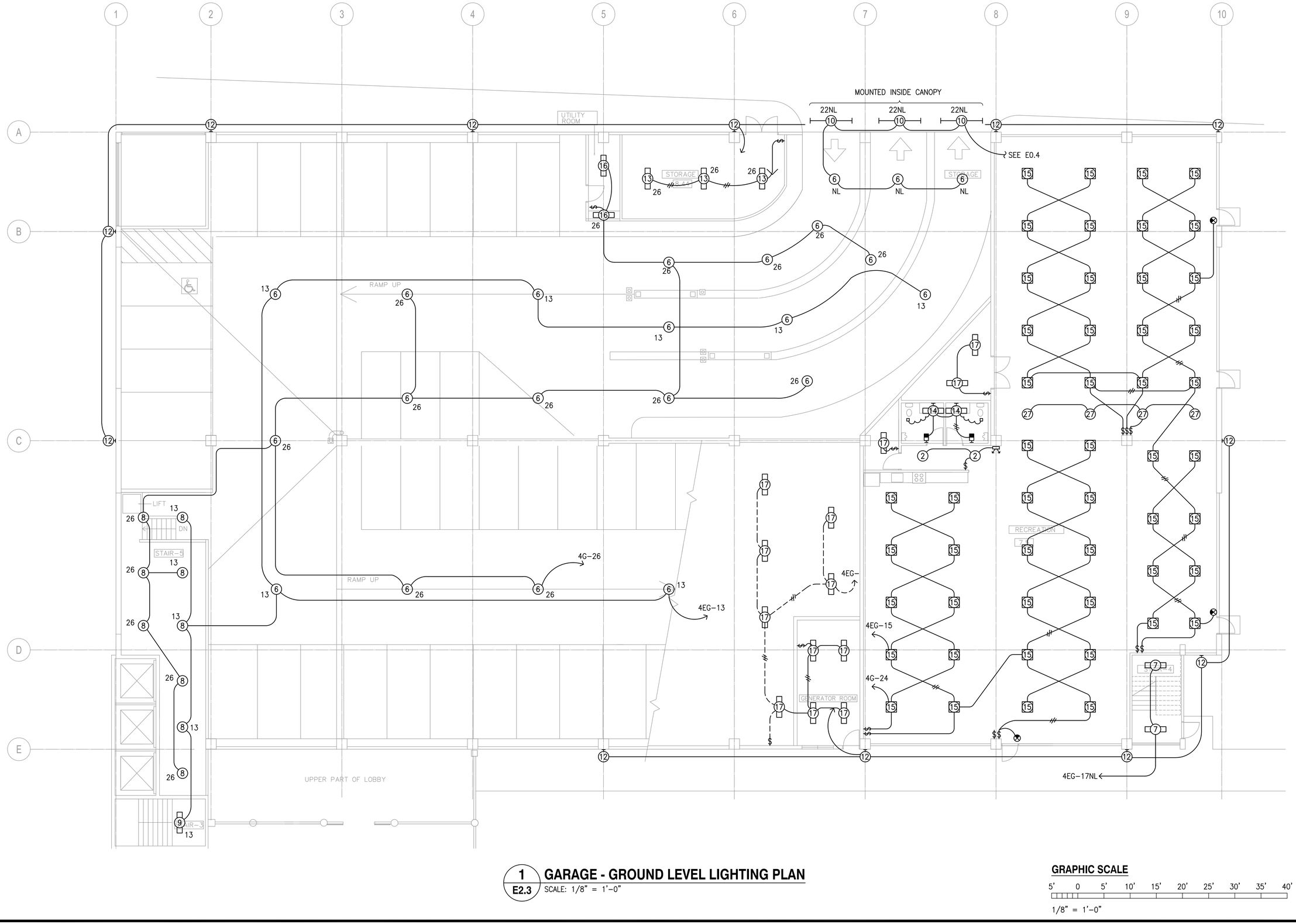

1 / E2.3 GARAGE - GROUND LEVEL LIGHTING PLAN
SCALE: 1/8" = 1'-0"

GRAPHIC SCALE
5' 0 5' 10' 15' 20' 25' 30' 35' 40'
1/8" = 1'-0"

REVISIONS

NO.	DATE	
.	.	.

GLENN T. KARAMATSU ★ LICENSED PROFESSIONAL ENGINEER No. 4368-E ★ HAWAII, U.S.A.
Expiration Date: 4/30/2014

THIS PROJECT WAS PREPARED BY ME OR UNDER MY SUPERVISION AND CONSTRUCTION OF THIS PROJECT WILL BE UNDER MY SUPERVISION.

KAKAAKO WORKFORCE HOUSING PER SUBCHAPTER 4 OF 2011 MAUKA PLAN AND RULES
801 SOUTH STREET
HONOLULU, HAWAII
GARAGE - GROUND LEVEL LIGHTING PLAN

KAZU YATO, AIA & ASSOCIATES, INC.
2033 KOHAITOP TERRACE
HONOLULU, HI 96822
TEL: (808) 945-0040
FAX: (808) 955-0092

DATE	DRAWN	CHECK	FILE
	MC	GK	

SHEET
E2.3

11/5/12--8:42 Y:\001\001.528\001.528 E2.3 GL01.dwg

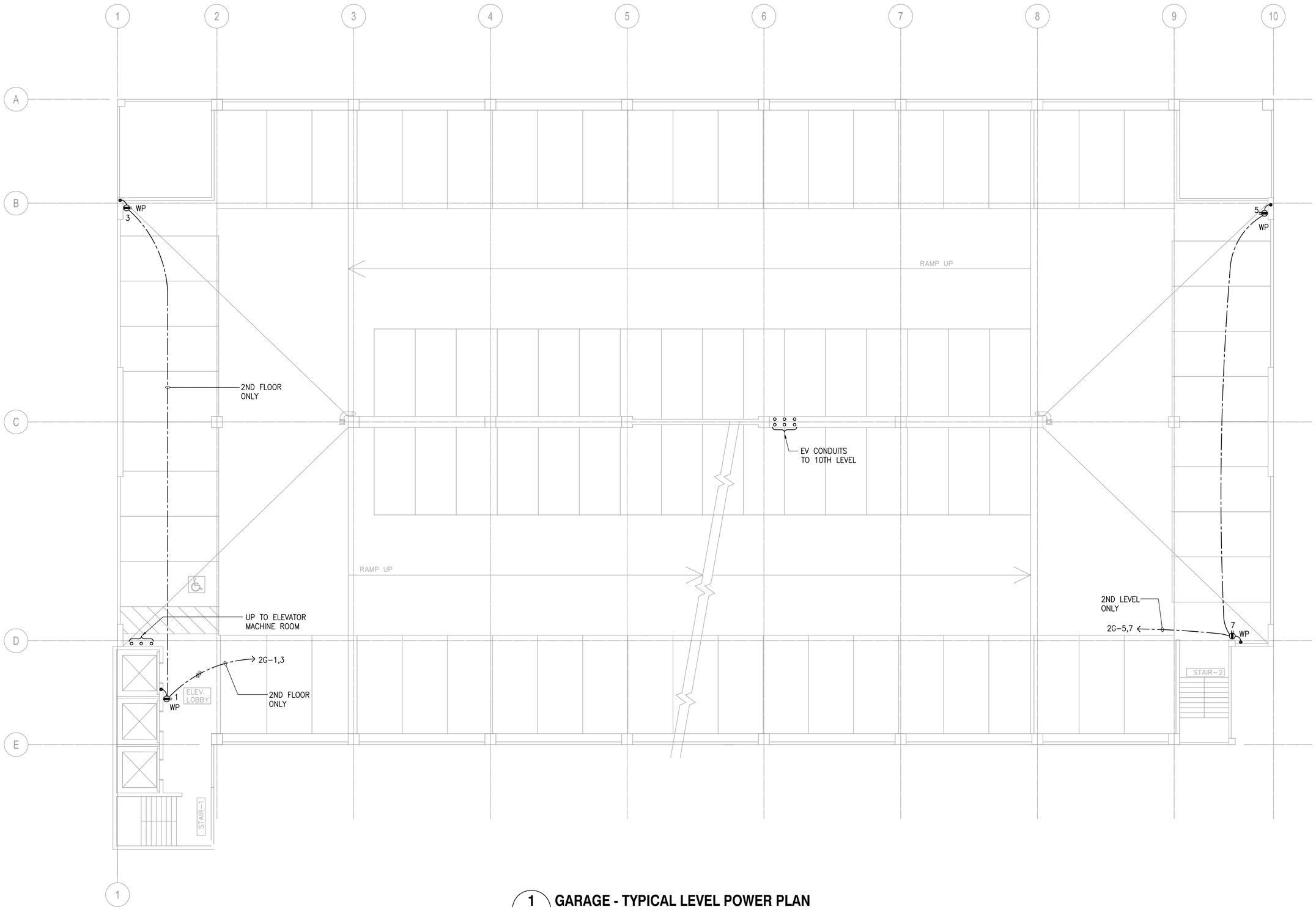

1 / E2.4 GARAGE - TYPICAL LEVEL POWER PLAN

SCALE: 1/8" = 1'-0"

GRAPHIC SCALE

5' 0 5' 10' 15' 20' 25' 30' 35' 40'

1/8" = 1'-0"

NO.	DATE	REVISIONS
.	.	.

GLENN T. KARAMATSU ★ LICENSED PROFESSIONAL ENGINEER No. 4368-E ★ HAWAII, U.S.A.
Expiration Date: 4/30/2014

THIS PROJECT WAS PREPARED BY ME OR UNDER MY SUPERVISION AND CONSTRUCTION OF THIS PROJECT WILL BE UNDER MY SUPERVISION.

KAKAAKO WORKFORCE HOUSING
SUBCHAPTER 4 OF 2011 MAUKA PLAN AND RULES PER
801 SOUTH STREET
HONOLULU, HAWAII
GARAGE - TYPICAL LEVEL POWER PLAN

KAZU YATO, AIA & ASSOCIATES,INC.
2033 ROUNDTOP TERRACE
HONOLULU, HI 96822
TEL: (808) 946-0040
FAX: (808) 955-0052

DATE	DRAWN	CHECK	FILE
	MC	GK	

SHEET

E2.4

11/5/12-8:41 Y:\001\001.528\001.528 E2.4 TP01.dwg

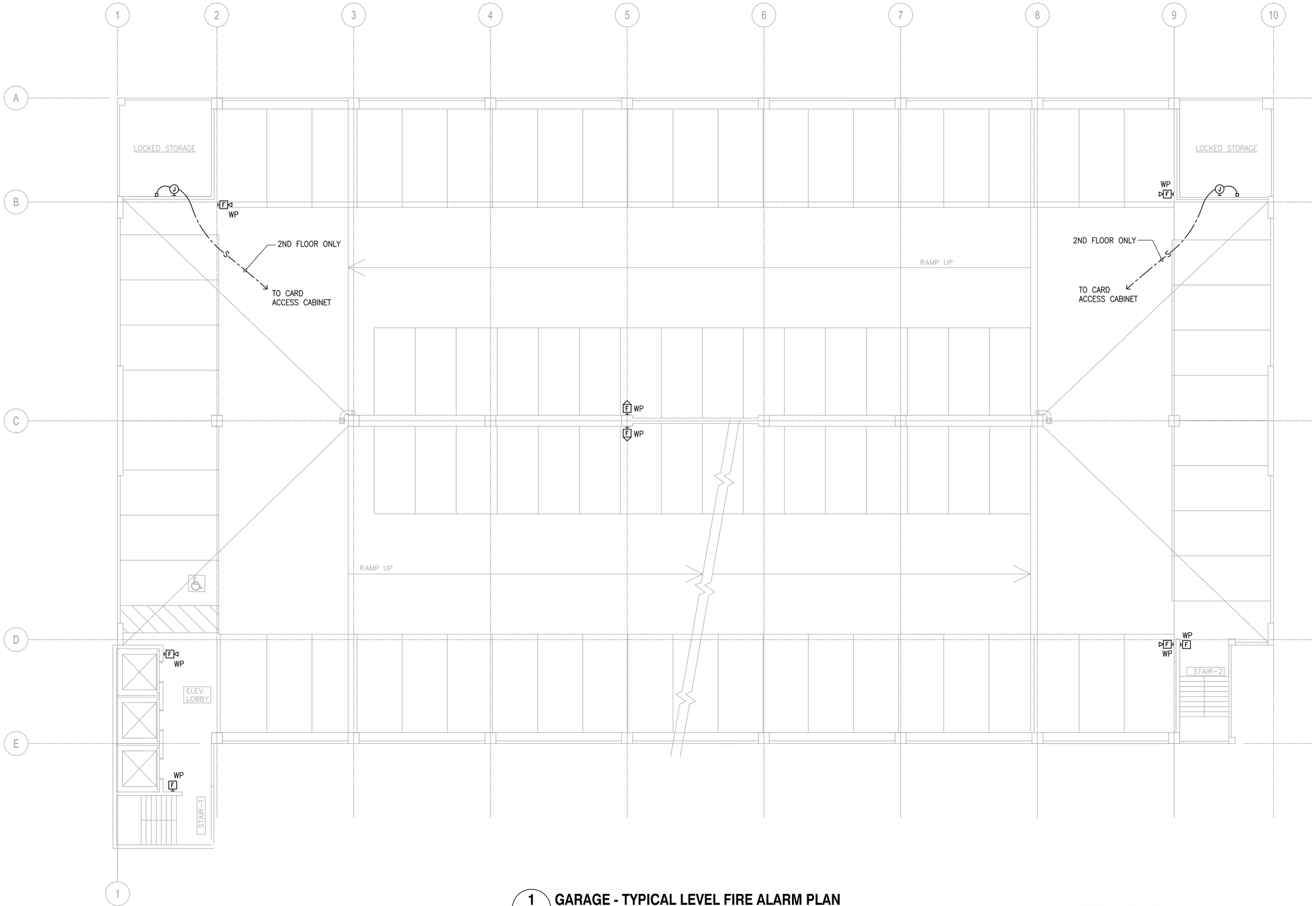

1 / E2.5 GARAGE - TYPICAL LEVEL FIRE ALARM PLAN

SCALE: 1/8" = 1'-0"

GRAPHIC SCALE

5' 0 5' 10' 15' 20' 25' 30' 35' 40'

1/8" = 1'-0"

NO.	DATE	REVISIONS
.	.	.

GLENN T. KARAMATSU
LICENSED PROFESSIONAL ENGINEER
No. 4,368-E
HAWAII, U.S.A.
Expiration Date: 4/30/2014

THIS PROJECT WAS PREPARED BY ME OR UNDER MY SUPERVISION AND CONSTRUCTION OF THIS PROJECT WILL BE UNDER MY SUPERVISION.

KAKAAKO WORKFORCE HOUSING
SUBCHAPTER 4 OF 2011 MAUKA PLAN AND RULES

801 SOUTH STREET
HONOLULU, HAWAII

GARAGE - TYPICAL LEVEL FIRE ALARM PLAN

KAZU YATO, AIA & ASSOCIATES,INC.
2033 ROUNDTOP TERRACE
HONOLULU, HI 96822
TEL: (808) 946-0040
FAX: (808) 955-0052

DATE	DRAWN	CHECK	FILE
	MC	GK	

SHEET

E2.5

11/5/12-8:41 Y:\001\001.528\001.528 E2.5 TF01.dwg

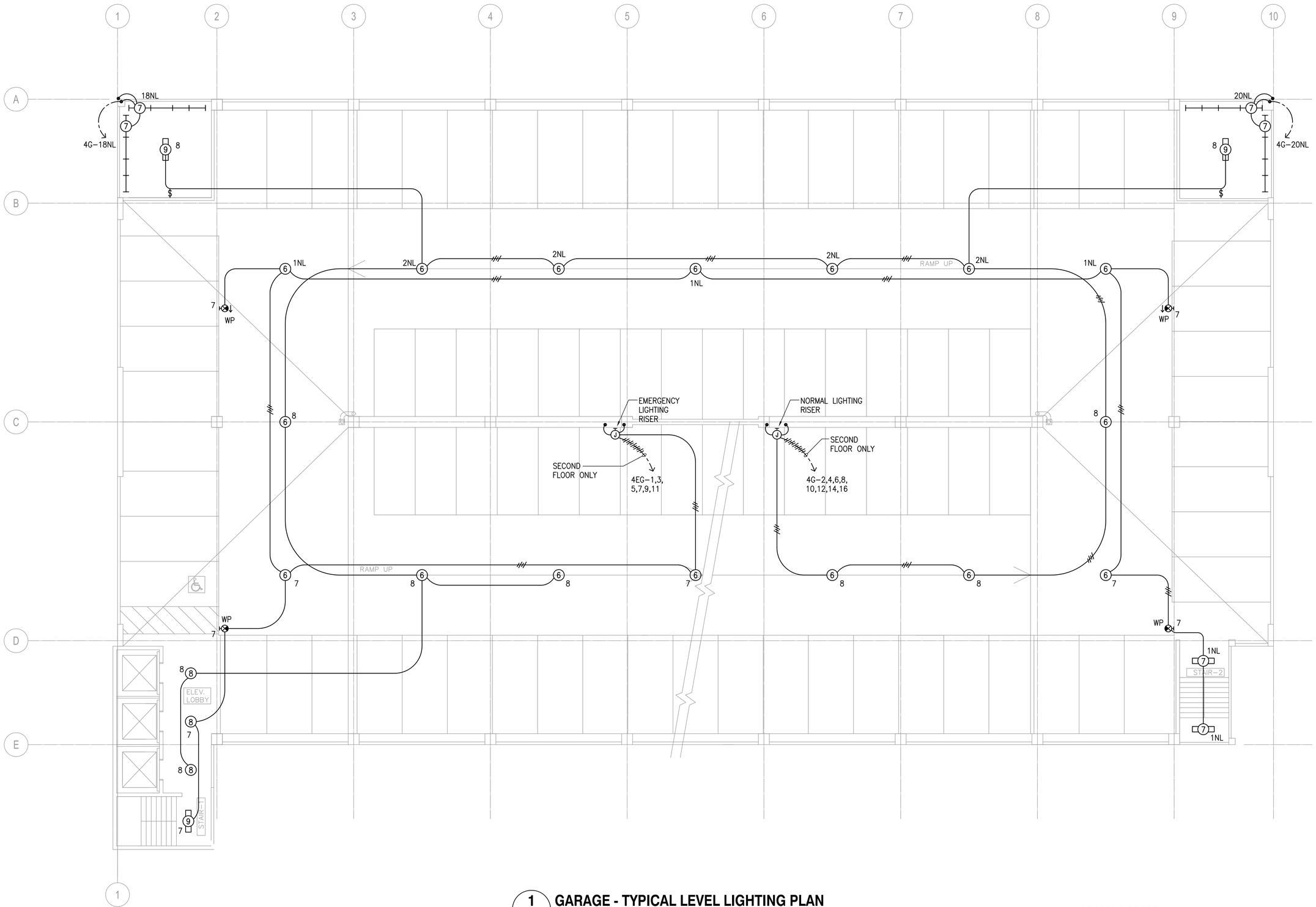

1 / E2.6 GARAGE - TYPICAL LEVEL LIGHTING PLAN

SCALE: 1/8" = 1'–0"

GRAPHIC SCALE

5' 0 5' 10' 15' 20' 25' 30' 35' 40'

1/8" = 1'–0"

NO.	DATE	REVISIONS
.	.	.

GLENN T. KARAMATSU ★ LICENSED PROFESSIONAL ENGINEER No. 4368–E ★ HAWAII, U.S.A.

Expiration Date: 4/30/2014

THIS PROJECT WAS PREPARED BY ME OR UNDER MY SUPERVISION AND CONSTRUCTION OF THIS PROJECT WILL BE UNDER MY SUPERVISION.

KAKAAKO WORKFORCE HOUSING PER SUBCHAPTER 4 OF 2011 MAUKA PLAN AND RULES

801 SOUTH STREET
HONOLULU, HAWAII

GARAGE - TYPICAL LEVEL LIGHTING PLAN

KAZU YATO, AIA & ASSOCIATES,INC.
2033 ROUNDTOP TERRACE
HONOLULU, HI 96822
TEL: (808) 945–0040
FAX: (808) 955–0022

DATE	DRAWN	CHECK	FILE
	MC	GK	

SHEET

E2.6

11/5/12–8:41 Y:\001\001.528\001.528 E2.6 TL01.dwg

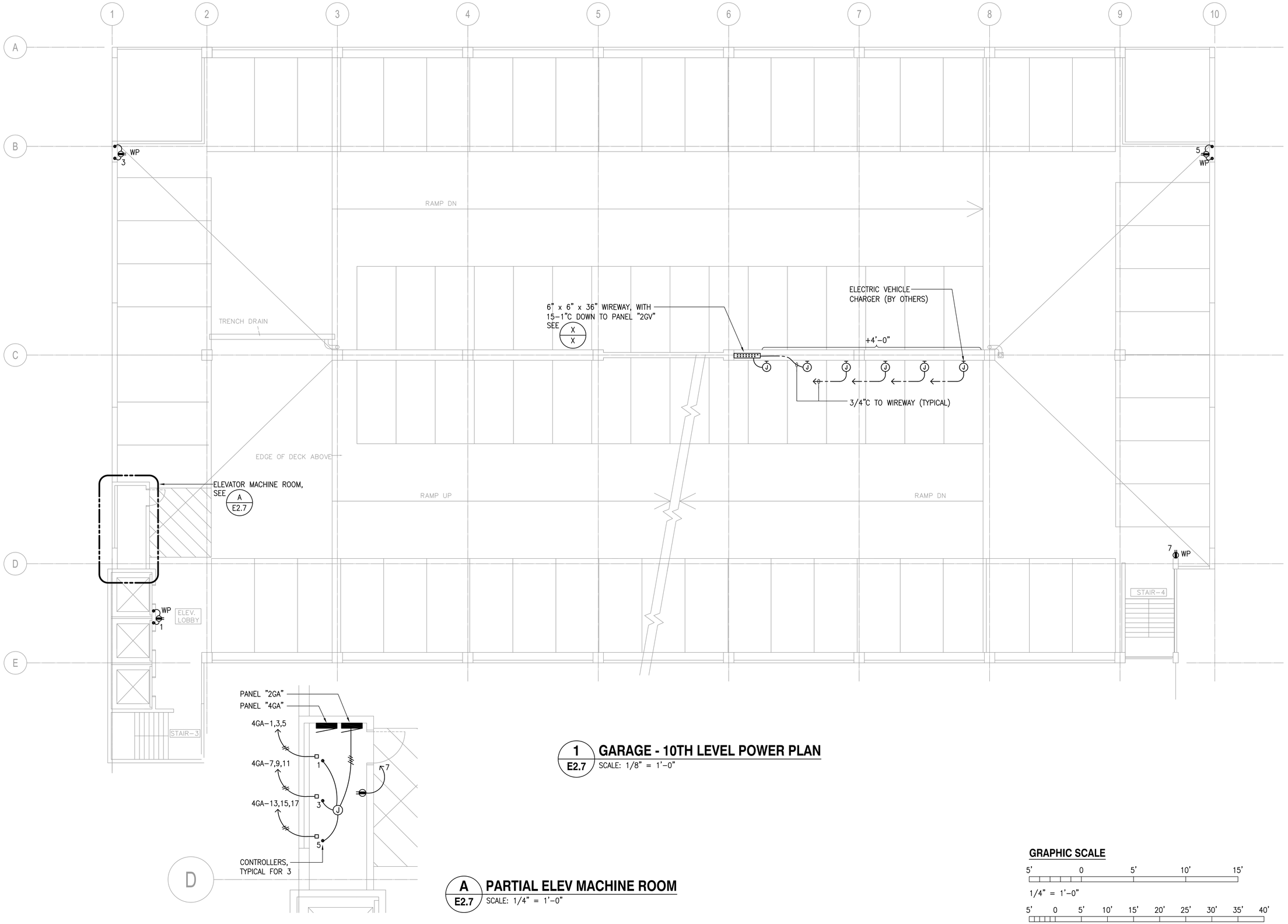

1/E2.7 GARAGE - 10TH LEVEL POWER PLAN

SCALE: 1/8" = 1'-0"

A/E2.7 PARTIAL ELEV MACHINE ROOM

SCALE: 1/4" = 1'-0"

GRAPHIC SCALE

5' 0 5' 10' 15'

1/4" = 1'-0"

5' 0 5' 10' 15' 20' 25' 30' 35' 40'

1/8" = 1'-0"

NO.	DATE	REVISIONS
.	.	.

GLENN T. KARAMATSU — LICENSED PROFESSIONAL ENGINEER — No. 4368-E — HAWAII, U.S.A.

Expiration Date: 4/30/2014

THIS PROJECT WAS PREPARED BY ME OR UNDER MY SUPERVISION AND CONSTRUCTION OF THIS PROJECT WILL BE UNDER MY SUPERVISION.

KAKAAKO WORKFORCE HOUSING PER
SUBCHAPTER 4 OF 2011 MAUKA PLAN AND RULES

801 SOUTH STREET
HONOLULU, HAWAII

GARAGE - 10TH LEVEL POWER PLAN

KAZU YATO, AIA & ASSOCIATES, INC.
2033 ROUNDTOP TERRACE
HONOLULU, HI 96822
TEL: (808) 945-0040
FAX: (808) 955-0992

DATE	DRAWN	CHECK	FILE
	MC	GK	

SHEET

E2.7

11/5/12-8:40 Y:\2001\001.528\001.528 E2.7.10THP01.dwg

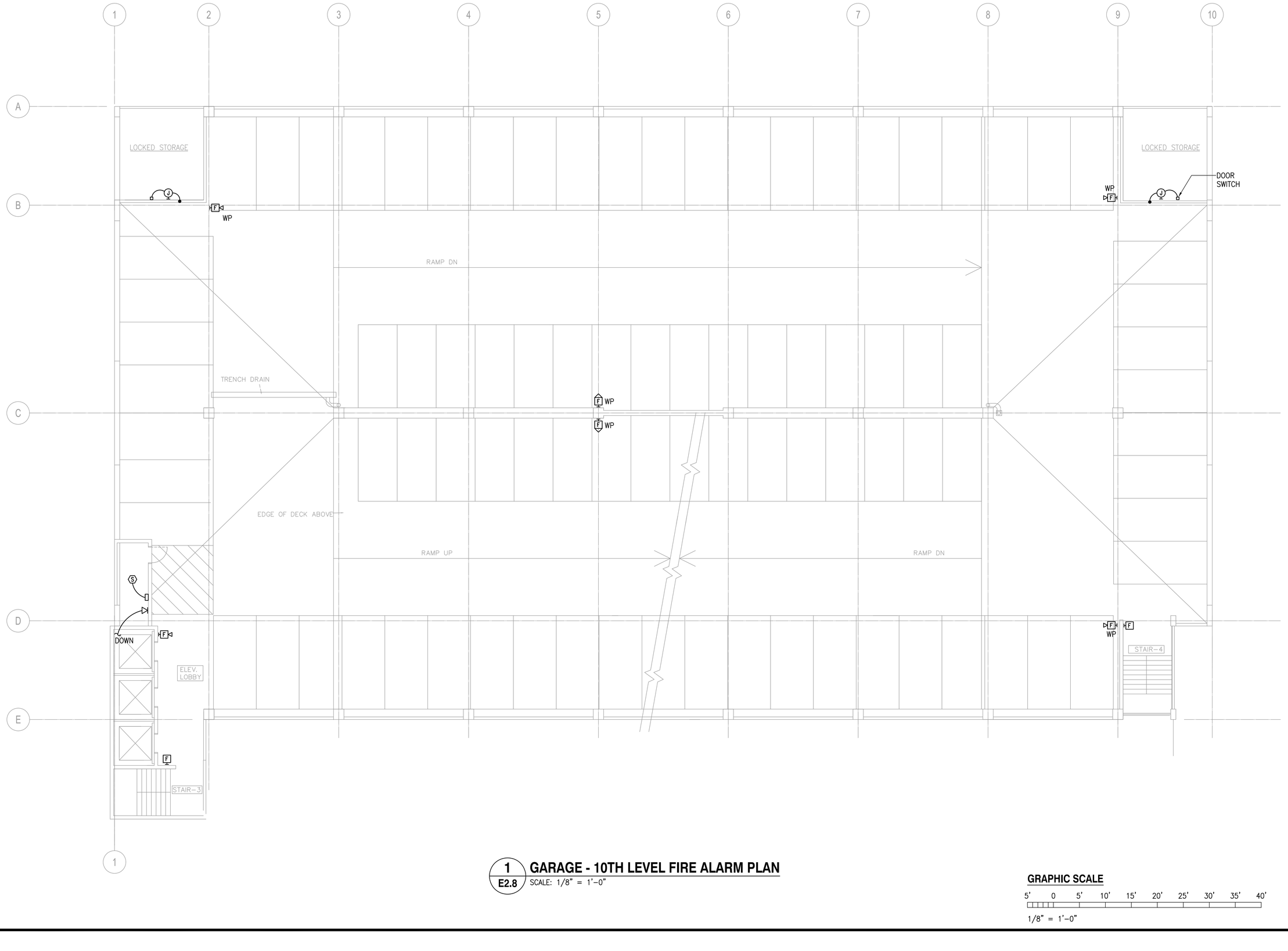

1 / E2.8 GARAGE - 10TH LEVEL FIRE ALARM PLAN

SCALE: 1/8" = 1'-0"

GRAPHIC SCALE

5' 0 5' 10' 15' 20' 25' 30' 35' 40'

1/8" = 1'-0"

REVISIONS

NO.	DATE	
.	.	.

GLENN T. KARAMATSU — LICENSED PROFESSIONAL ENGINEER — No. 4368-E — HAWAII, U.S.A.

Expiration Date: 4/30/2014

THIS PROJECT WAS PREPARED BY ME OR UNDER MY SUPERVISION AND CONSTRUCTION OF THIS PROJECT WILL BE UNDER MY SUPERVISION.

KAKAAKO WORKFORCE HOUSING PER SUBCHAPTER 4 OF 2011 MAUKA PLAN AND RULES

801 SOUTH STREET
HONOLULU, HAWAII

GARAGE - 10TH LEVEL FIRE ALARM PLAN

KAZU YATO, AIA & ASSOCIATES, INC.
2033 ROUNDTOP TERRACE
HONOLULU, HI 96822
TEL: (808) 946-0040
FAX: (808) 955-0002

DATE	DRAWN	CHECK	FILE
	MC	QK	

SHEET

E2.8

11/5/12-8:40 Y:\001\001.528\001.528 E2.8 10THF01.dwg

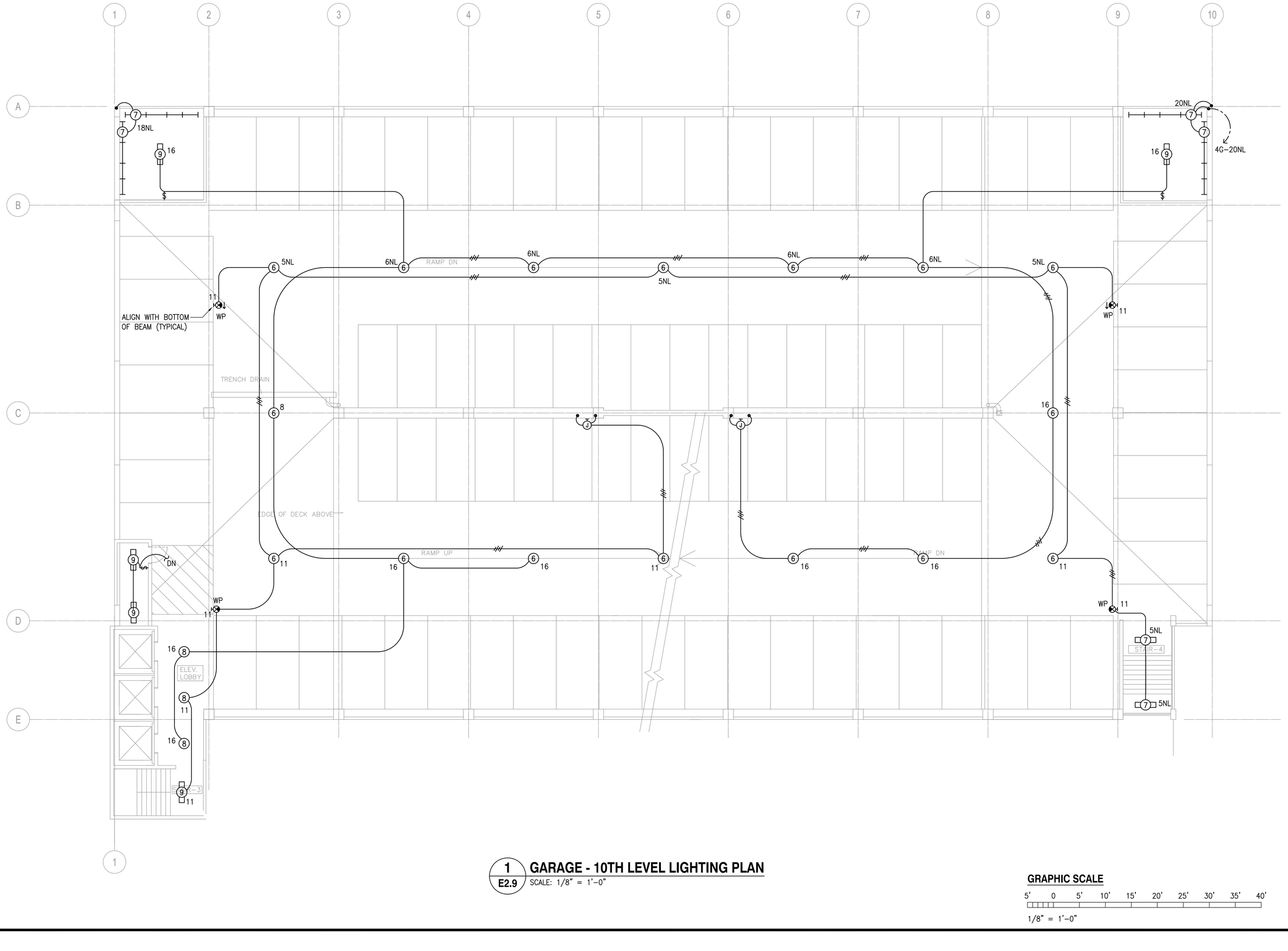

1 / E2.9 GARAGE - 10TH LEVEL LIGHTING PLAN

SCALE: 1/8" = 1'-0"

GRAPHIC SCALE

5' 0 5' 10' 15' 20' 25' 30' 35' 40'

1/8" = 1'-0"

REVISIONS

NO.	DATE	
.	.	.

GLENN T. KARAMATSU ★ LICENSED PROFESSIONAL ENGINEER No. 4368-E ★ HAWAII, U.S.A.

Expiration Date: 4/30/2014

THIS PROJECT WAS PREPARED BY ME OR UNDER MY SUPERVISION AND CONSTRUCTION OF THIS PROJECT WILL BE UNDER MY SUPERVISION.

KAKAAKO WORKFORCE HOUSING PER SUBCHAPTER 4 OF 2011 MAUKA PLAN AND RULES

801 SOUTH STREET
HONOLULU, HAWAII

GARAGE - 10TH LEVEL LIGHTING PLAN

KAZU YATO, AIA & ASSOCIATES, INC.
2033 ROUNDTOP TERRACE
HONOLULU, HI 96822
TEL: (808) 945-0040
FAX: (808) 955-0022

DATE	DRAWN	CHECK	FILE
	MC	GK	

SHEET

E2.9

11/5/12-8:40 Y:\001\001.528\001.528 E2.9.10THL01.dwg

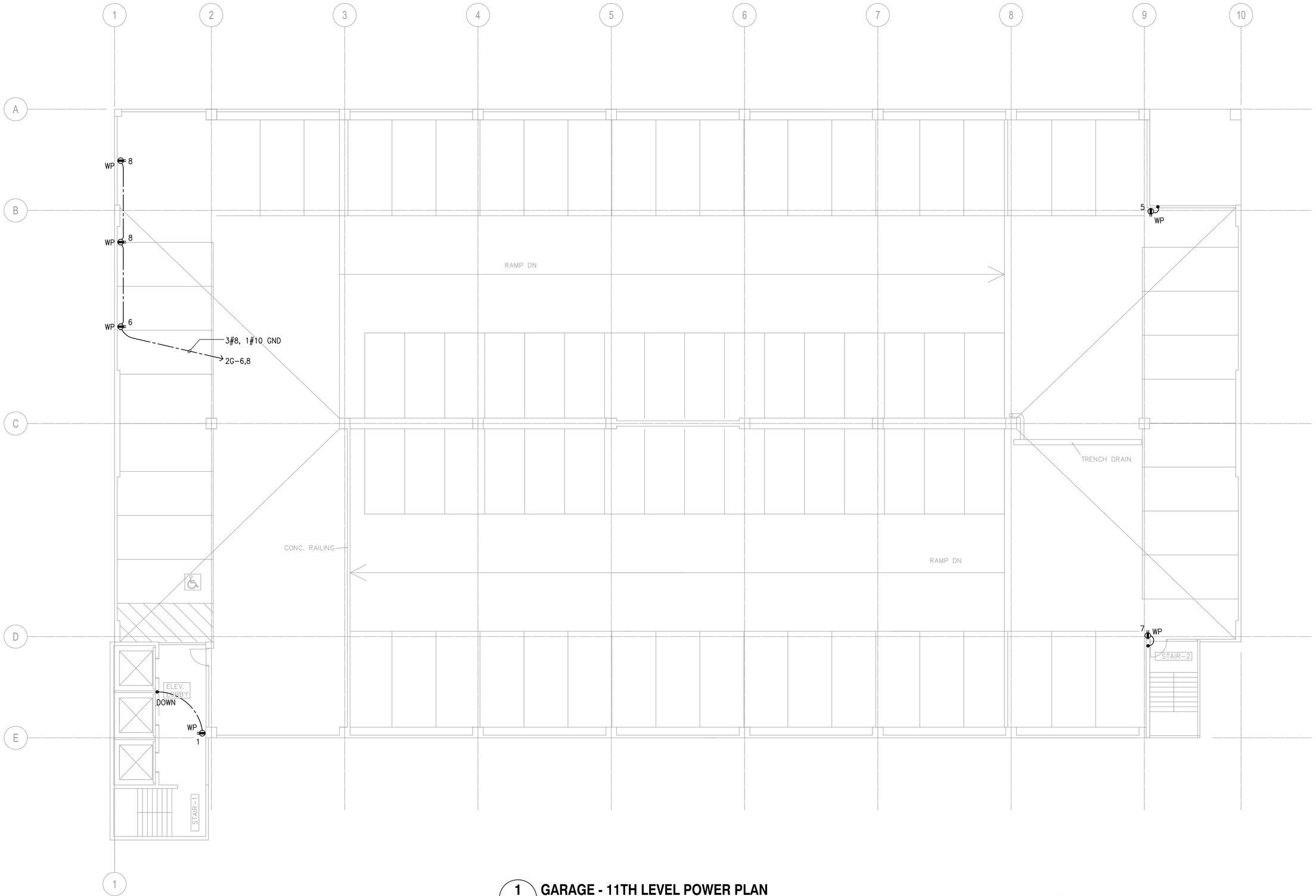

1 / E2.10 GARAGE - 11TH LEVEL POWER PLAN
SCALE: 1/8" = 1'-0"

GRAPHIC SCALE
5' 0 5' 10' 15' 20' 25' 30' 35' 40'
1/8" = 1'-0"

NO.	DATE	REVISIONS
.	.	.

GLENN T. KARAMATSU ★ LICENSED PROFESSIONAL ENGINEER No. 4368-E ★ HAWAII, U.S.A.
Expiration Date: 4/30/2014

THIS PROJECT WAS PREPARED BY ME OR UNDER MY SUPERVISION AND CONSTRUCTION OF THIS PROJECT WILL BE UNDER MY SUPERVISION.

KAKAAKO WORKFORCE HOUSING
SUBCHAPTER 4 OF 2011 MAUKA PLAN AND RULES PER

801 SOUTH STREET
HONOLULU, HAWAII

GARAGE - 11TH LEVEL POWER PLAN

KAZU YATO, AIA & ASSOCIATES, INC.
2033 ROUNDTOP TERRACE
HONOLULU, HI 96822
TEL: (808) 946-0040
FAX: (808) 955-0002

DATE	DRAWN	CHECK	FILE
	MC	GK	

SHEET
E2.10

11/5/12-8:39 Y:\001\001.528\001.528 E2.10.11THP01.dwg

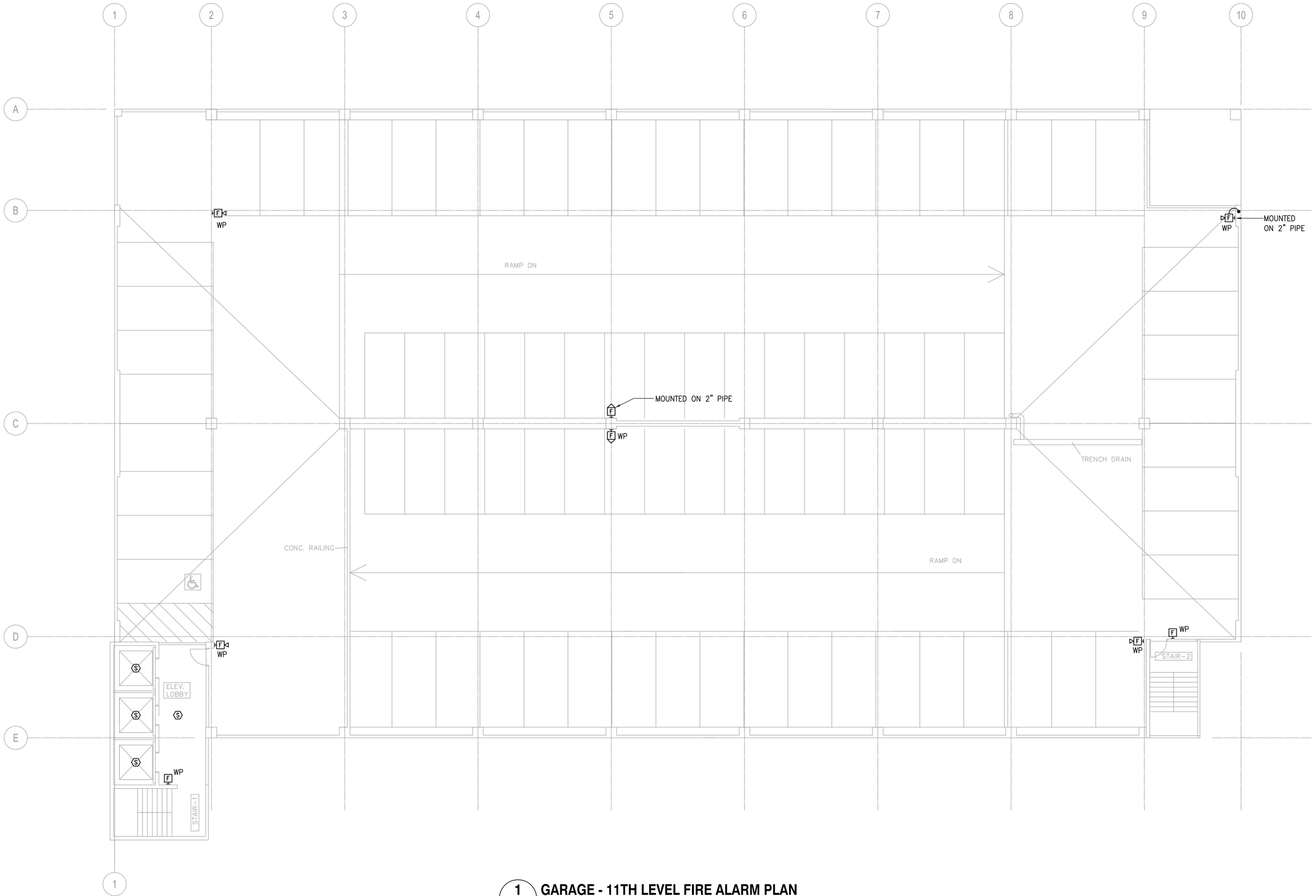

1 / E2.11 GARAGE - 11TH LEVEL FIRE ALARM PLAN

SCALE: 1/8" = 1'-0"

GRAPHIC SCALE

5' 0 5' 10' 15' 20' 25' 30' 35' 40'

1/8" = 1'-0"

NO.	DATE	REVISIONS
.	.	.

GLENN T. KARAMATSU ★ LICENSED PROFESSIONAL ENGINEER No. 4368-E ★ HAWAII, U.S.A.
Expiration Date: 4/30/2014

THIS PROJECT WAS PREPARED BY ME OR UNDER MY SUPERVISION AND CONSTRUCTION OF THIS PROJECT WILL BE UNDER MY SUPERVISION.

KAKAAKO WORKFORCE HOUSING
SUBCHAPTER 4 OF 2011 MAUKA PLAN AND RULES
801 SOUTH STREET
HONOLULU, HAWAII

GARAGE - 11TH LEVEL FIRE ALARM PLAN

KAZU YATO, AIA & ASSOCIATES, INC.
2033 ROUND TOP TERRACE
HONOLULU, HI 96822
TEL: (808) 946-2040
FAX: (808) 955-2002

DATE	DRAWN	CHECK	FILE
	MC	GK	

SHEET

E2.11

11/5/12-8:39 Y:\001\001.528\001.528 E2.11.11THF01.dwg

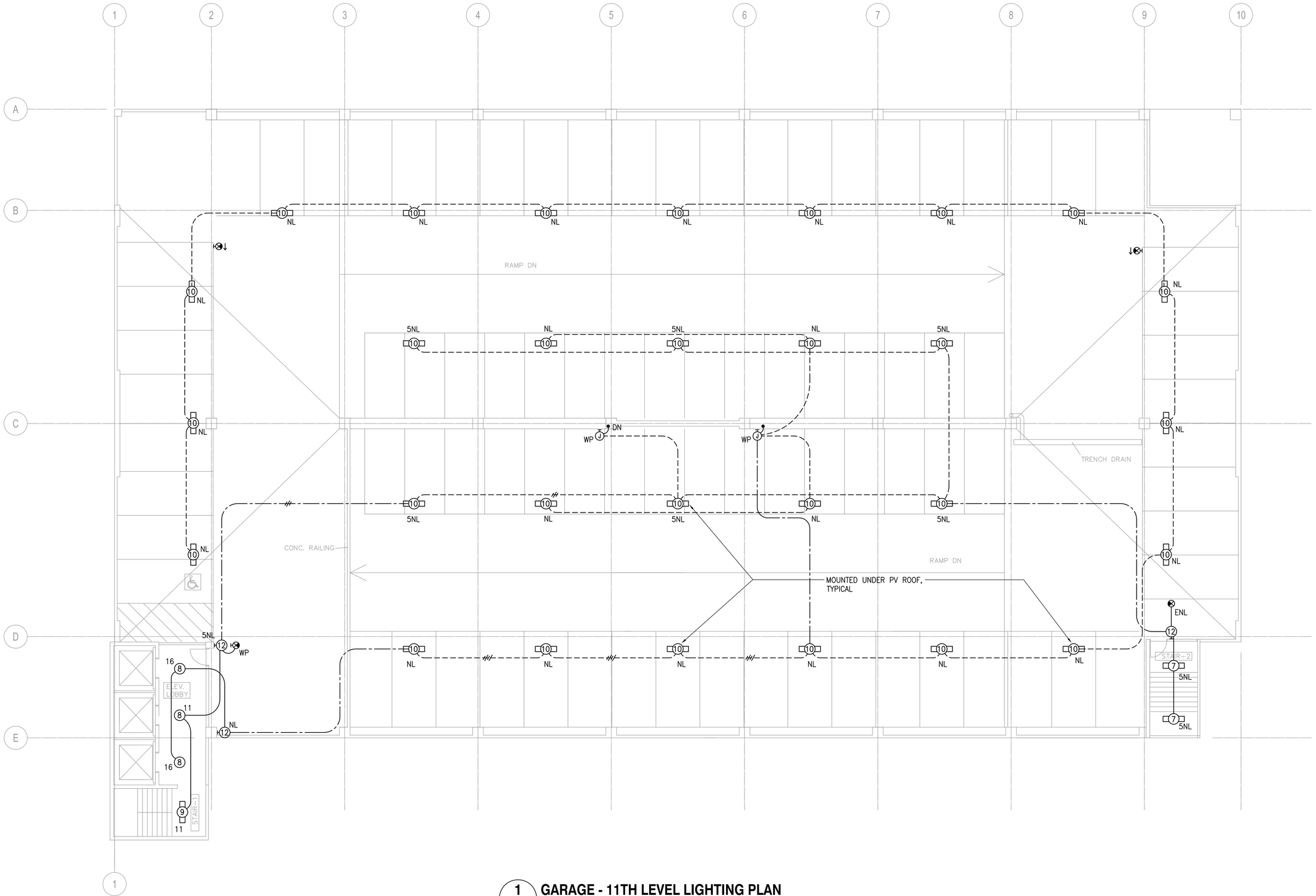

1 GARAGE - 11TH LEVEL LIGHTING PLAN

E2.12 SCALE: 1/8" = 1'-0"

GRAPHIC SCALE

5' 0 5' 10' 15' 20' 25' 30' 35' 40'

1/8" = 1'-0"

REVISIONS

NO.	DATE	
.	.	.

GLENN T. KARAMATSU
LICENSED PROFESSIONAL ENGINEER
No. 4368-E
HAWAII, U.S.A.
Expiration Date: 4/30/2014

THIS PROJECT WAS PREPARED BY ME OR UNDER MY SUPERVISION AND CONSTRUCTION OF THIS PROJECT WILL BE UNDER MY SUPERVISION.

KAKAAKO WORKFORCE HOUSING PER SUBCHAPTER 4 OF 2011 MAUKA PLAN AND RULES

801 SOUTH STREET
HONOLULU, HAWAII

LGARAGE - 11TH LEVEL LIGHTING PLAN

KAZU YATO, AIA & ASSOCIATES, INC.
2033 ROUNDTOP TERRACE
HONOLULU, HI 96822
TEL: (808) 945-0040
FAX: (808) 955-0022

DATE	DRAWN	CHECK	FILE
	MC	GK	

SHEET

E2.12

11/5/12-8:39 Y:\001\001.528\001.528 E2.12.11THL01.dwg

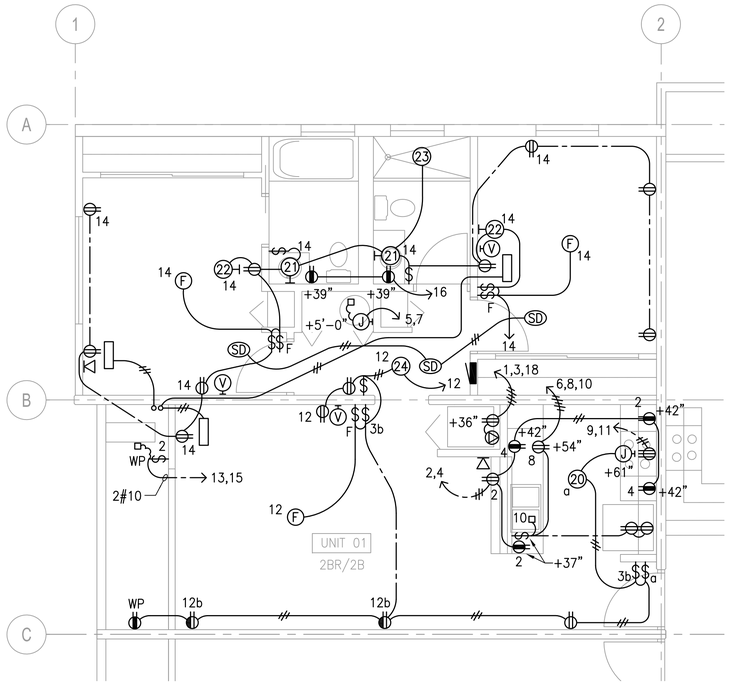

1 / E3.1 UNIT 01 - 2BR/2B UNIT 02, 13, 14 SIMILAR
SCALE: 1/4" = 1'–0"

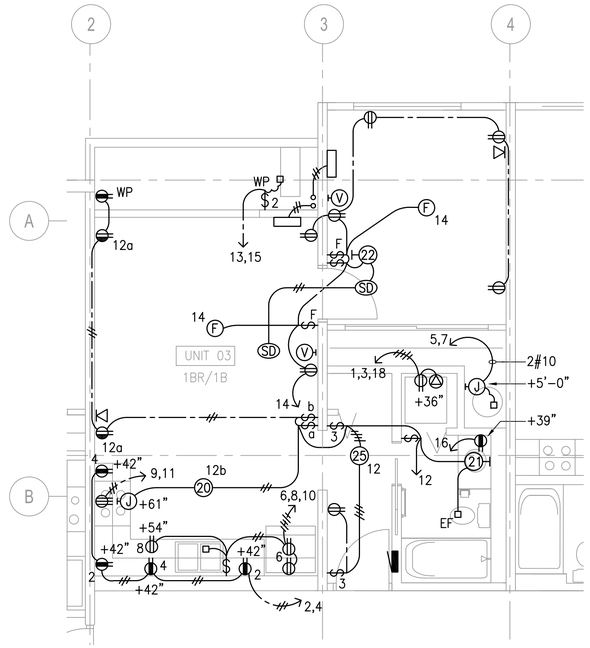

2 / E3.1 UNIT 03 - 1BR/1B UNIT 11 SIMILAR
SCALE: 1/4" = 1'–0"

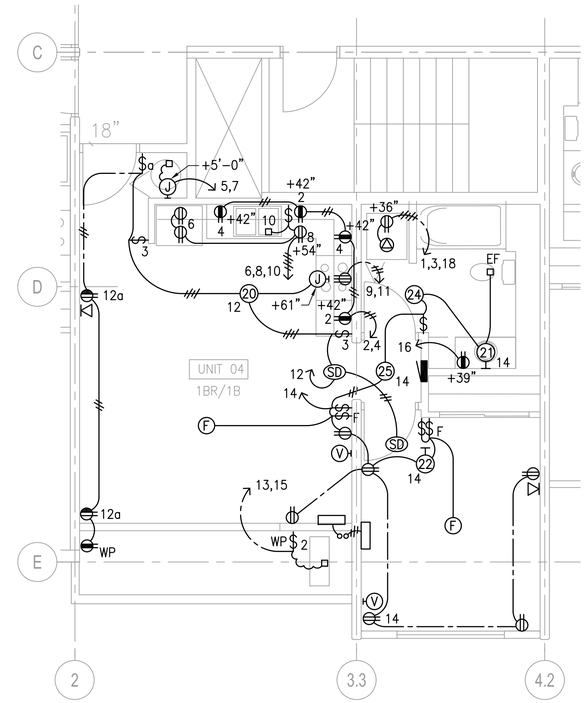

3 / E3.1 UNIT 04 - 1BR/1B UNIT 12 SIMILAR
SCALE: 1/4" = 1'–0"

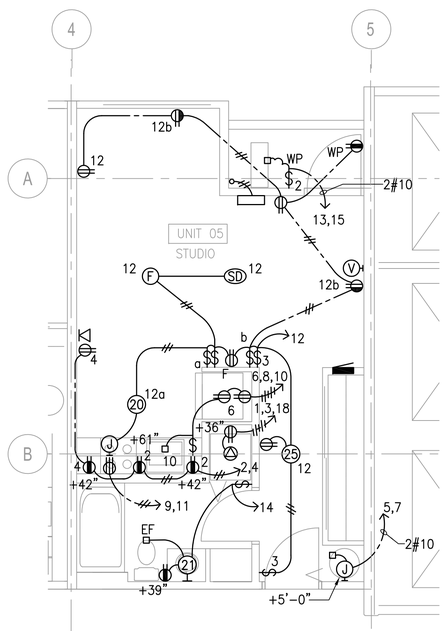

4 / E3.1 UNIT 05 - STUDIO UNIT 09 SIMILAR
SCALE: 1/4" = 1'–0"

TYPICAL UNIT WIRING NOTES:

1. MC AND ENT ACCEPTABLE FOR DWELLING UNIT WIRING ONLY. NOT PERMISSIBLE FOR COMMON AREA WIRING.
2. ACCU DISCONNECT SHALL BE 20A 2P IN A SURFACE WP BELL BOX WITH WP COVER AND LIQUIDTIGHT FLEX OUT BOTTOM OF BOX MOUNT AT +36".
3. WASHER AND DRYER RECEPTACLE AT +36". DRYER TO BE NEMA 14–30R.
4. COORDINATE WALL LIGHTS WITH SOFFITS. LOWER LIGHT TO 6'–0" WHERE UNDER SOFFIT.
5. PROVIDE AFCI BREAKERS PER 2008 NEC.
6. PROVIDE TAMPERPROOF RECEPTACLES IN UNITS, PER 2008 NEC.
7. SMOKE DETECTORS IN UNIT, TANDEM WIRED FOR COMMON ALARM.
8. RECEPTACLE OVER REFRIGERATION MOUNTED IN OVERHEAD CABINET FOR TELEPHONE ONT.
9. VERIFY MOUNTING HEIGHTS ABOVE CABINETS.

GRAPHIC SCALE

5' 0 5' 10' 15'

1/4" = 1'–0"

REVISIONS

NO.	DATE	
.	.	.

GLENN T. KARAMATSU
LICENSED PROFESSIONAL ENGINEER
No. 4368–E
HAWAII, U.S.A.
Expiration Date: 4/30/2014

THIS PROJECT WAS PREPARED BY ME OR UNDER MY SUPERVISION AND CONSTRUCTION OF THIS PROJECT WILL BE UNDER MY SUPERVISION.

KAKAAKO WORKFORCE HOUSING PER SUBCHAPTER 4 OF 2011 MAUKA PLAN AND RULES

801 SOUTH STREET
HONOLULU, HAWAII

KAZU YATO, AIA & ASSOCIATES,INC.
2033 RICHARD STREET
HONOLULU, HI 96822
TEL: (808) 945-0040
FAX: (808) 955-0022

DATE	DRAWN	CHECK	FILE
	MC	GK	

SHEET

E3.1

11/5/12–8:38 Y:\001\001.528\001.528 E3.1.001.dwg

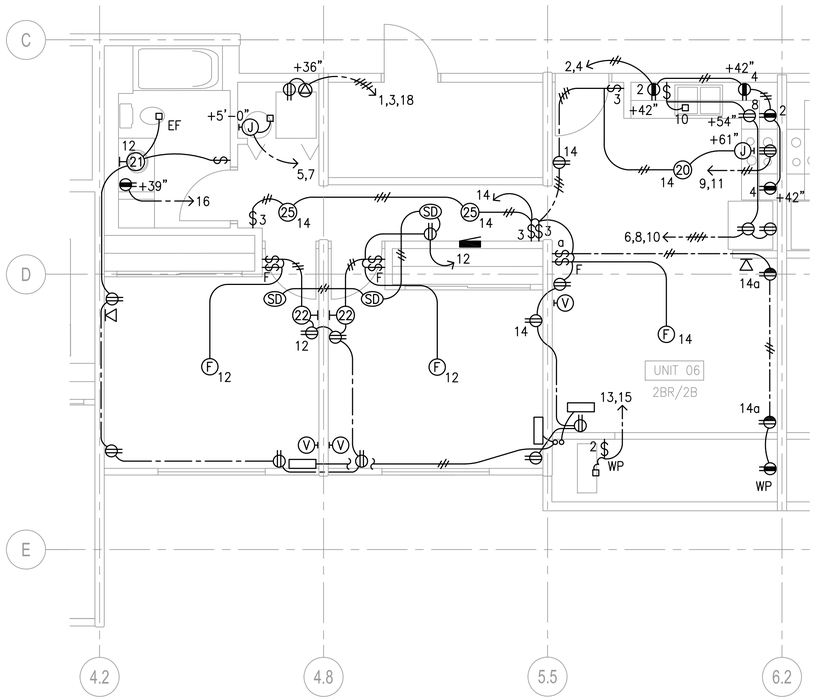

1 UNIT 06 - 2BR/1B
E3.2 SCALE: 1/4" = 1'-0"

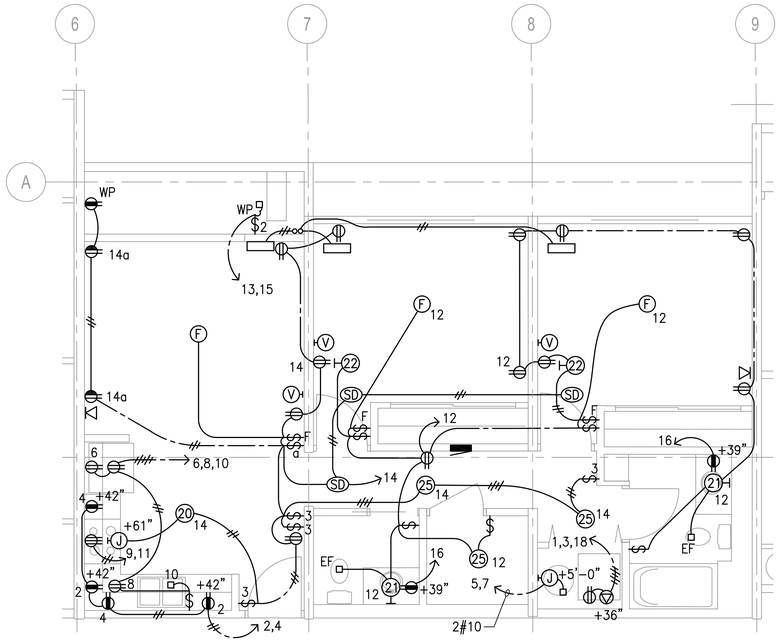

2 UNIT 07 - 2BR/1.5B
E3.2 SCALE: 1/4" = 1'-0"

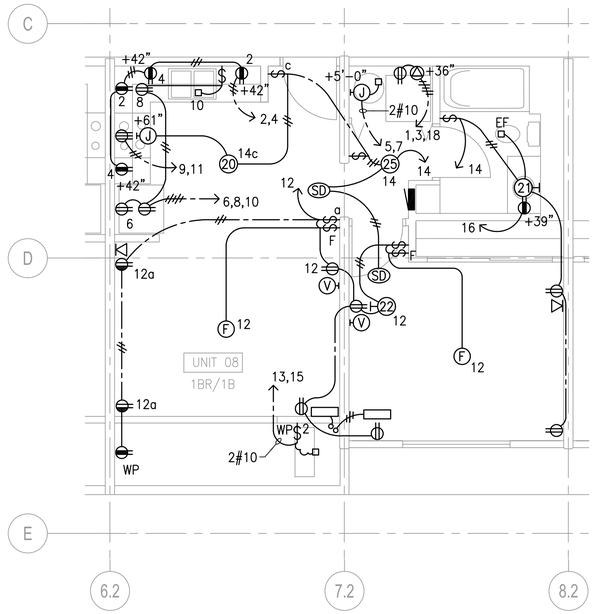

3 UNIT 08 - 1BR/1B
E3.2 SCALE: 1/4" = 1'-0"

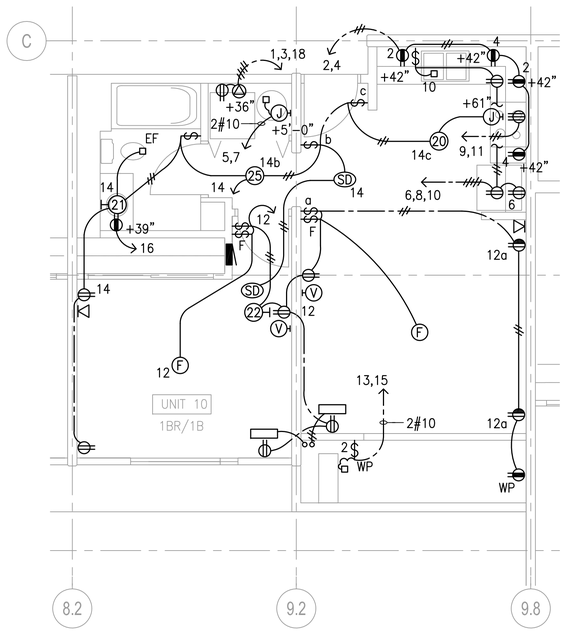

4 UNIT 10 - 1BR/1B
E3.2 SCALE: 1/4" = 1'-0"

GRAPHIC SCALE

5' 0 5' 10' 15'

1/4" = 1'-0"

REVISIONS

NO.	DATE
.	.

GLENN T. KARAMATSU — LICENSED PROFESSIONAL ENGINEER — No. 4368-E — HAWAII, U.S.A. — Expiration Date: 4/30/2014

THIS PROJECT WAS PREPARED BY ME OR UNDER MY SUPERVISION AND CONSTRUCTION OF THIS PROJECT WILL BE UNDER MY SUPERVISION.

KAKAAKO WORKFORCE HOUSING PER SUBCHAPTER 4 OF 2011 MAUKA PLAN AND RULES

801 SOUTH STREET
HONOLULU, HAWAII

TYPICAL UNITS

KAZU YATO, AIA & ASSOCIATES, INC.
2033 ROUNDTOP TERRACE
HONOLULU, HI 96822
TEL: (808) 945-2040
FAX: (808) 955-3052

DATE	DRAWN	CHECK	FILE
	MC	GK	

SHEET

E3.2

11/5/12 - 8:38 Y:\001\001.528\001.528 E3.2.002.dwg

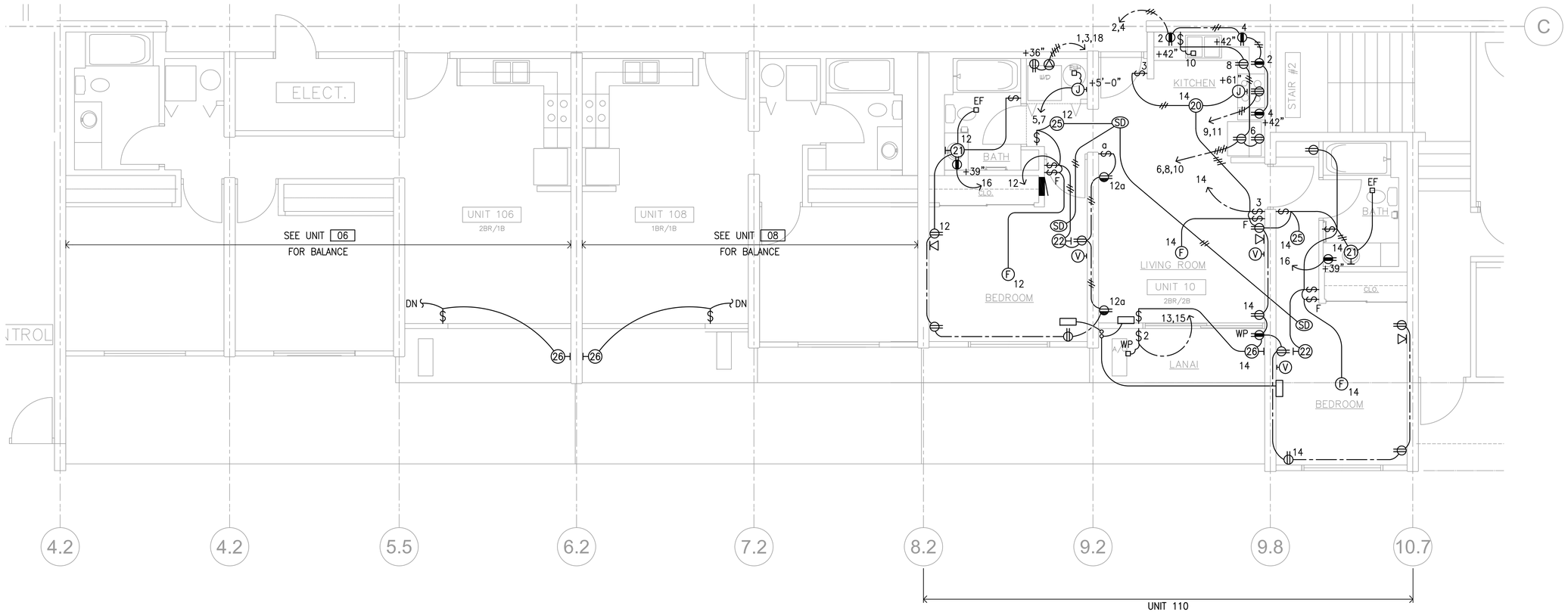

1 GROUND FLOOR ELECTRICAL PLAN
E3.3 SCALE: 1/4" = 1'-0"

GRAPHIC SCALE

5' 0 5' 10' 15'

1/4" = 1'-0"

REVISIONS

NO.	DATE	
.	.	.

GLENN T. KARAMATSU — LICENSED PROFESSIONAL ENGINEER No. 4368-E — HAWAII, U.S.A.
Expiration Date: 4/30/2014

THIS PROJECT WAS PREPARED BY ME OR UNDER MY SUPERVISION AND CONSTRUCTION OF THIS PROJECT WILL BE UNDER MY SUPERVISION.

KAKAAKO WORKFORCE HOUSING PER
SUBCHAPTER 4 OF 2011 MAUKA PLAN AND RULES

801 SOUTH STREET
HONOLULU, HAWAII

GROUND FLOOR ELECTRICAL PLAN

KAZU YATO, AIA & ASSOCIATES,INC.
2033 ROUNDTOP TERRACE
HONOLULU, HI 96822
TEL: (808) 945-0040
FAX: (808) 955-0052

DATE	DRAWN	CHECK	FILE
	MC	GK	

SHEET

E3.3

11/5/12-8:37 Y:\001\001.528\001.528 E3.3.003.dwg

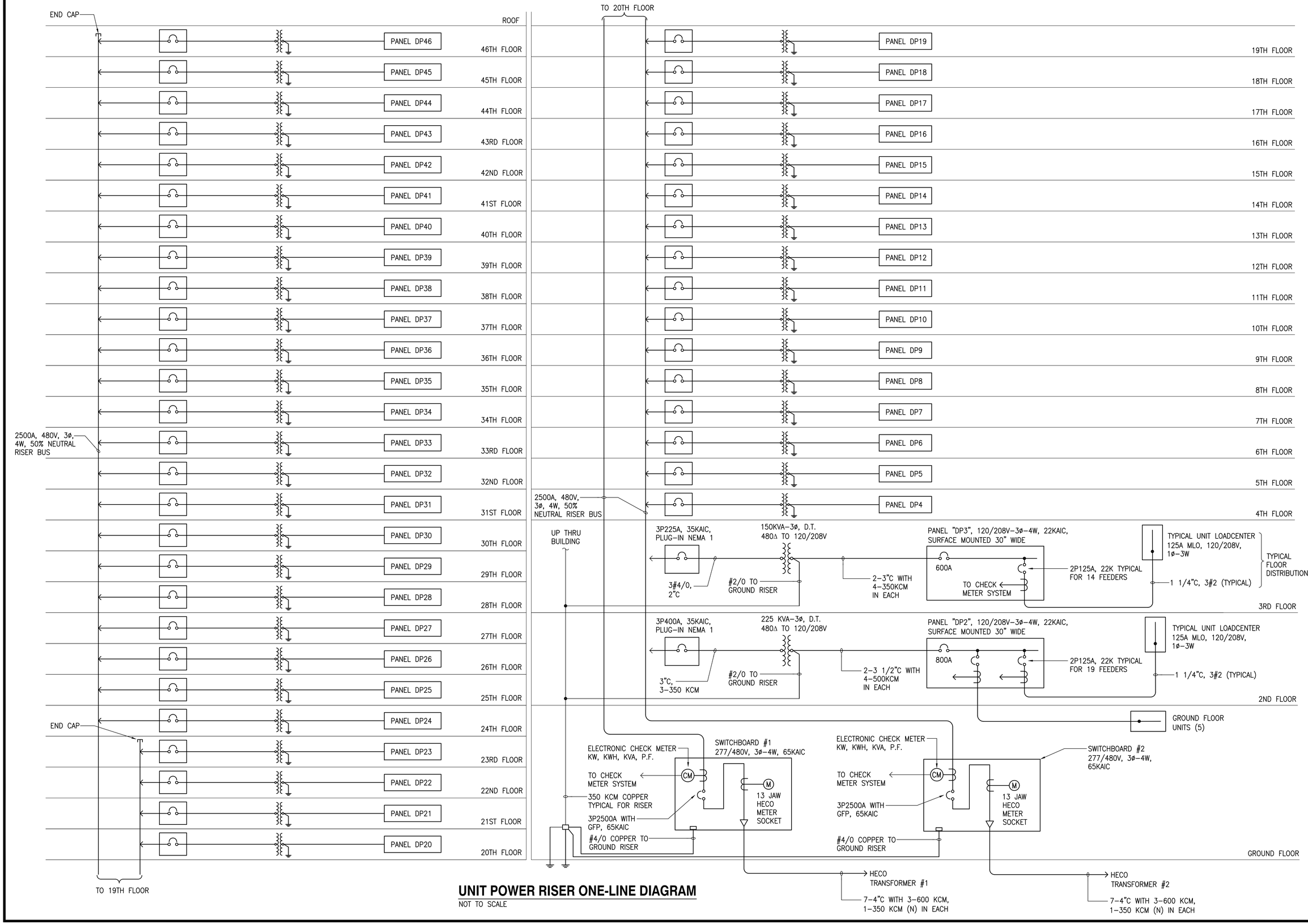

UNIT POWER RISER ONE-LINE DIAGRAM

NOT TO SCALE

NO.	DATE	REVISIONS
.	.	.

GLENN T. KARAMATSU — LICENSED PROFESSIONAL ENGINEER — No. 4368-E — HAWAII, U.S.A. — Expiration Date: 4/30/2014

THIS PROJECT WAS PREPARED BY ME OR UNDER MY SUPERVISION AND CONSTRUCTION OF THIS PROJECT WILL BE UNDER MY SUPERVISION.

KAKAAKO WORKFORCE HOUSING PER SUBCHAPTER 4 OF 2011 MAUKA PLAN AND RULES

801 SOUTH STREET
HONOLULU, HAWAII

UNIT POWER RISER ONE-LINE DIAGRAM

KAZU YATO, AIA & ASSOCIATES, INC.
2033 ROOSEVELT TERRACE
HONOLULU, HI 96822
TEL: (808) 945-0040
FAX: (808) 955-0052

DATE	DRAWN	CHECK	FILE
	MC	GK	

SHEET

E4.1

11/5/12-8:37 Y:\(001\001.528\001.528 E4.1 R01.dwg

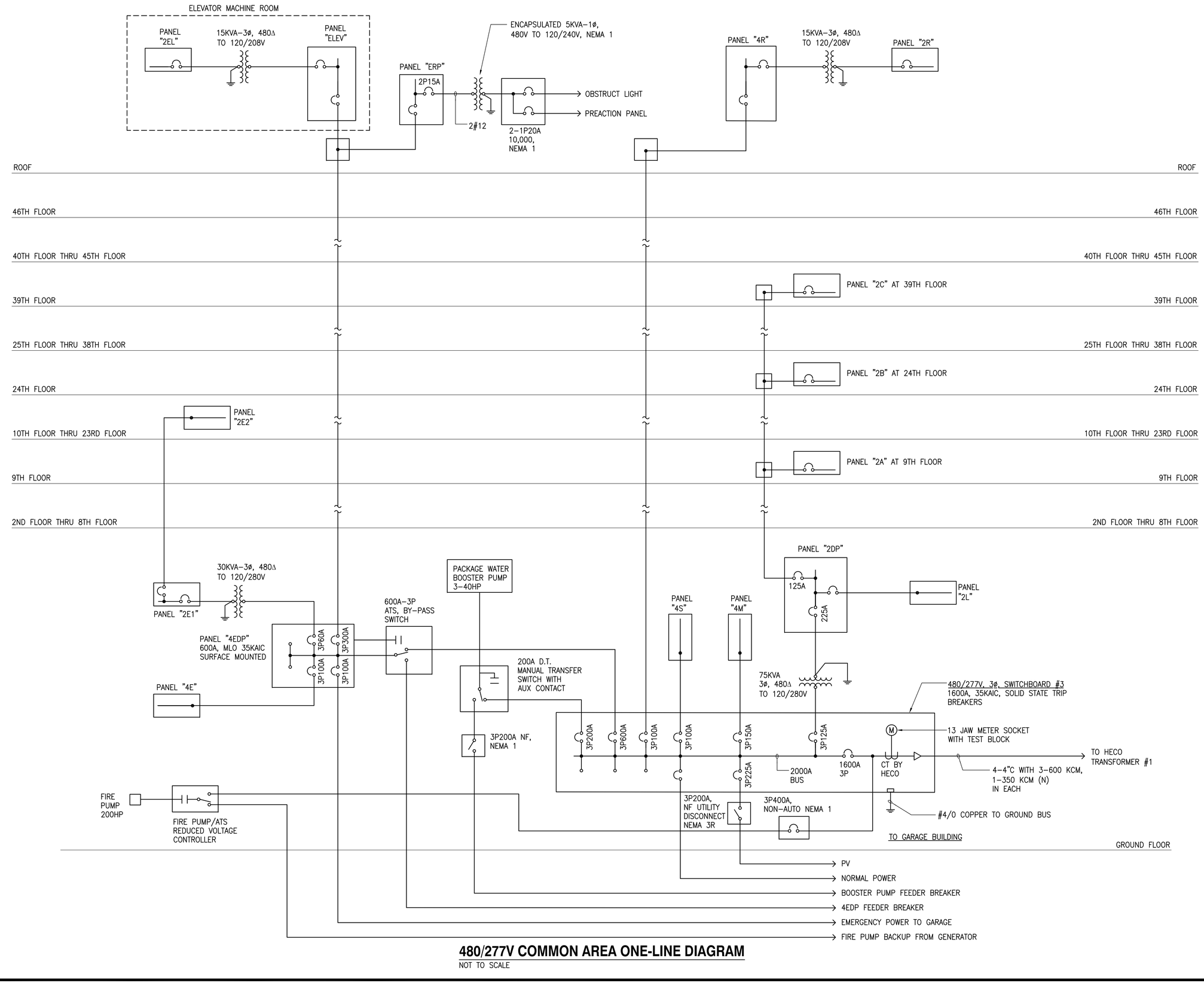

480/277V COMMON AREA ONE-LINE DIAGRAM

NOT TO SCALE

11/5/12–8:37 Y:\001\001.528\E4.2.R02.dwg

REVISIONS

NO.	DATE	
.	.	.

GLENN T. KARAMATSU ★ LICENSED PROFESSIONAL ENGINEER No. 4368–E ★ HAWAII, U.S.A.

Expiration Date: 4/30/2014

THIS PROJECT WAS PREPARED BY ME OR UNDER MY SUPERVISION AND CONSTRUCTION OF THIS PROJECT WILL BE UNDER MY SUPERVISION.

KAKAAKO WORKFORCE HOUSING PER SUBCHAPTER 4 OF 2011 MAUKA PLAN AND RULES

801 SOUTH STREET
HONOLULU, HAWAII

480/277V COMMON AREA ONE-LINE DIAGRAM

KAZU YATO, AIA & ASSOCIATES, INC.
2033 ROUNDTOP TERRACE
HONOLULU, HI 96822
TEL: (808) 945–0040
FAX: (808) 955–0992

DATE	DRAWN	CHECK	FILE
	MC	GK	

SHEET

E4.2

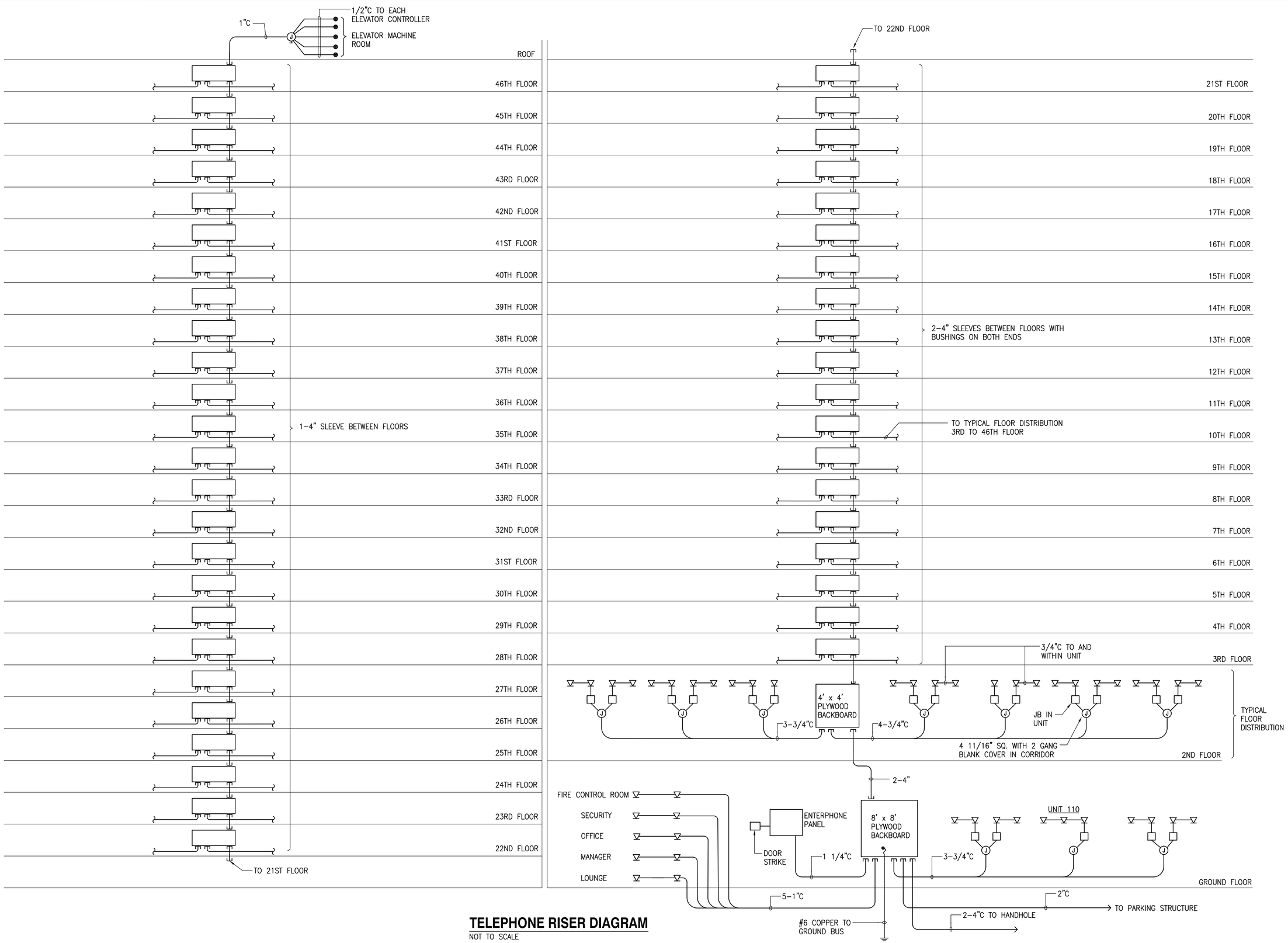

TELEPHONE RISER DIAGRAM

NOT TO SCALE

REVISIONS

NO.	DATE	
.	.	.

GLENN T. KARAMATSU — LICENSED PROFESSIONAL ENGINEER — No. 4368–E — HAWAII, U.S.A. — Expiration Date: 4/30/2014

THIS PROJECT WAS PREPARED BY ME OR UNDER MY SUPERVISION AND CONSTRUCTION OF THIS PROJECT WILL BE UNDER MY SUPERVISION.

KAKAAKO WORKFORCE HOUSING PER
SUBCHAPTER 4 OF 2011 MAUKA PLAN AND RULES

801 SOUTH STREET
HONOLULU, HAWAII

TELEPHONE RISER DIAGRAM

KAZU YATO, AIA & ASSOCIATES, INC.
2033 ROUNDTOP TERRACE
HONOLULU, HI 96822
TEL: (808) 945–2040
FAX: (808) 955–3052

DATE	DRAWN	CHECK	FILE
	MC	GK	

SHEET

E4.3

11/5/12–8:36 Y:\001\001.528\001.528 E4.3 R04.dwg

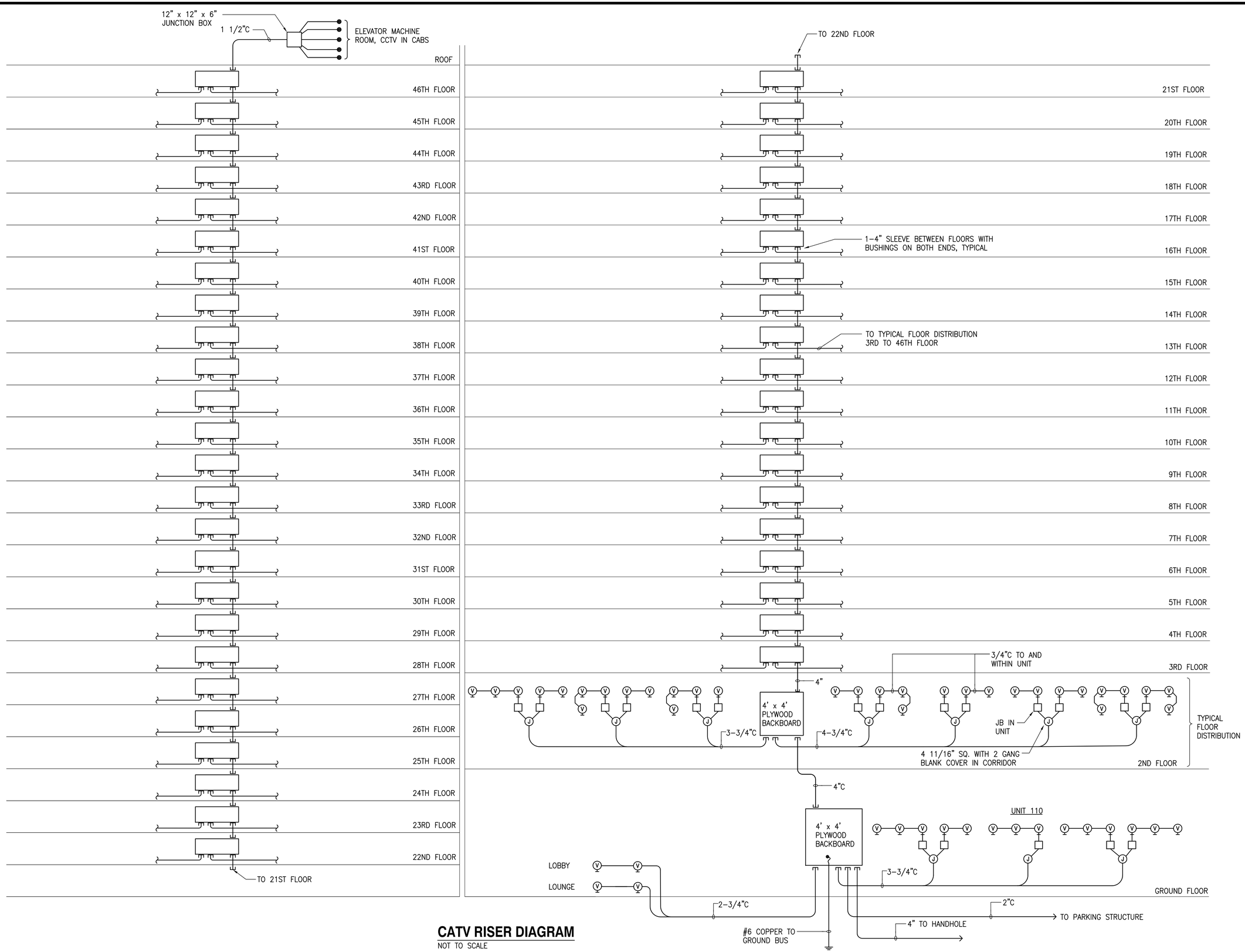

CATV RISER DIAGRAM

NOT TO SCALE

REVISIONS

NO.	DATE	
.	.	.

GLENN T. KARAMATSU
LICENSED PROFESSIONAL ENGINEER
No. 4368-E
HAWAII, U.S.A.
Expiration Date: 4/30/2014

THIS PROJECT WAS PREPARED BY ME OR UNDER MY SUPERVISION AND CONSTRUCTION OF THIS PROJECT WILL BE UNDER MY SUPERVISION.

KAKAAKO WORKFORCE HOUSING PER
SUBCHAPTER 4 OF 2011 MAUKA PLAN AND RULES

801 SOUTH STREET
HONOLULU, HAWAII

CATV RISER DIAGRAM

KAZU YATO, AIA & ASSOCIATES, INC.
2033 ROUNDTOP TERRACE
HONOLULU, HI 96822
TEL: (808) 945-2040
FAX: (808) 955-0052

DATE	DRAWN	CHECK	FILE
	MC	GK	

SHEET

E4.4

11/5/12 - 8:36 Y:\001\001.528\001.528 E4.4 R03.dwg

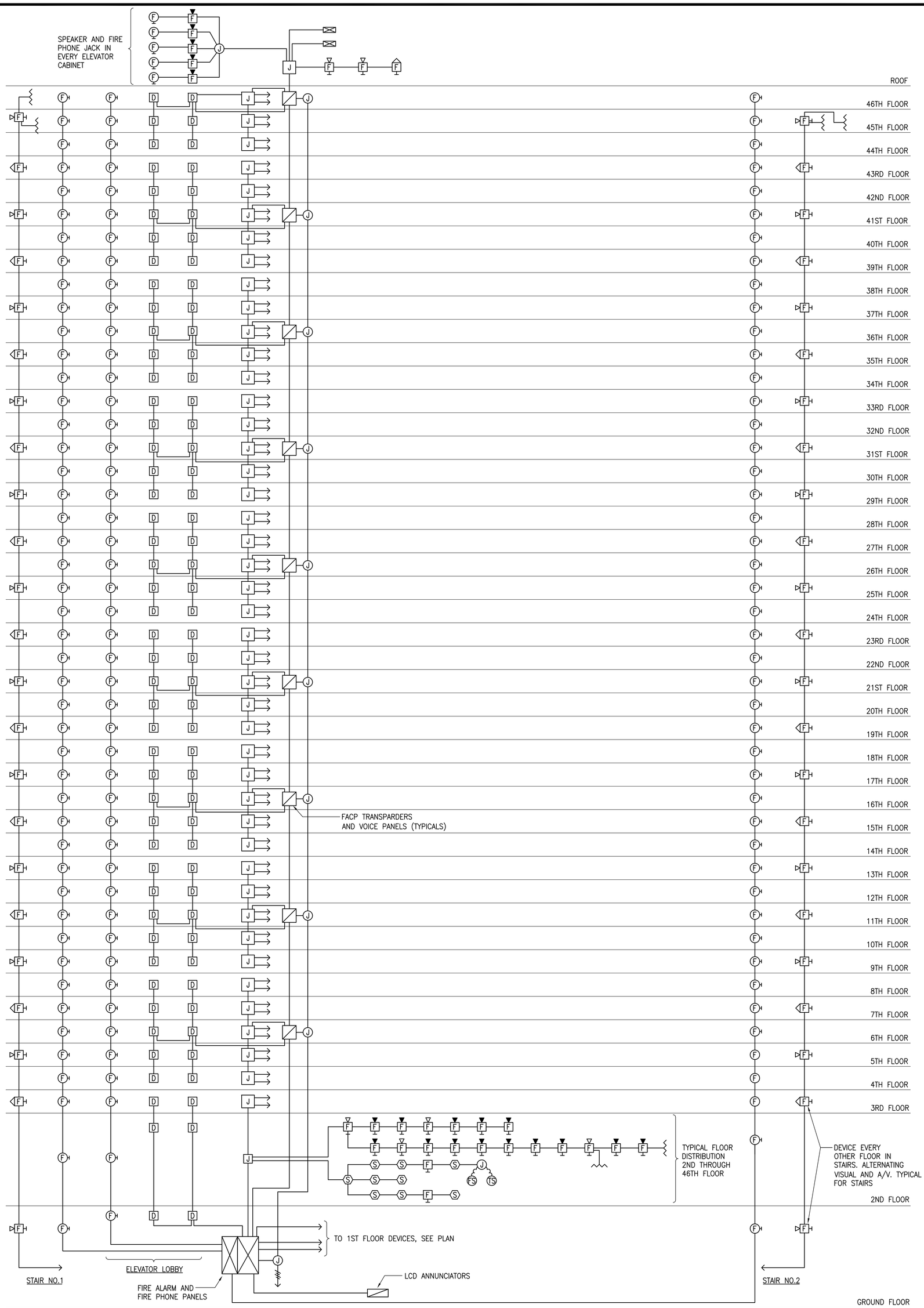

TOWER FIRE ALARM DIAGRAM

NO SCALE

E4.5 SHEET

DATE	
DRAWN	MC
CHECK	GK
FILE	

KAZU YATO, AIA & ASSOCIATES, INC.
2033 ROUNDTOP TERRACE
HONOLULU, HI 96822
TEL: (808) 945-0040
FAX: (808) 955-0052

KAKAAKO WORKFORCE HOUSING PER
SUBCHAPTER 4 OF 2011 MAUKA PLAN AND RULES

801 SOUTH STREET
HONOLULU, HAWAII

TOWER FIRE ALARM DIAGRAM

THIS PROJECT WAS PREPARED BY ME OR UNDER MY SUPERVISION AND CONSTRUCTION OF THIS PROJECT WILL BE UNDER MY SUPERVISION.

GLENN T. KARAMATSU
LICENSED PROFESSIONAL ENGINEER
No. 4368-E
HAWAII, U.S.A.
Expiration Date: 4/30/2014

NO.	DATE	REVISIONS
.	.	.

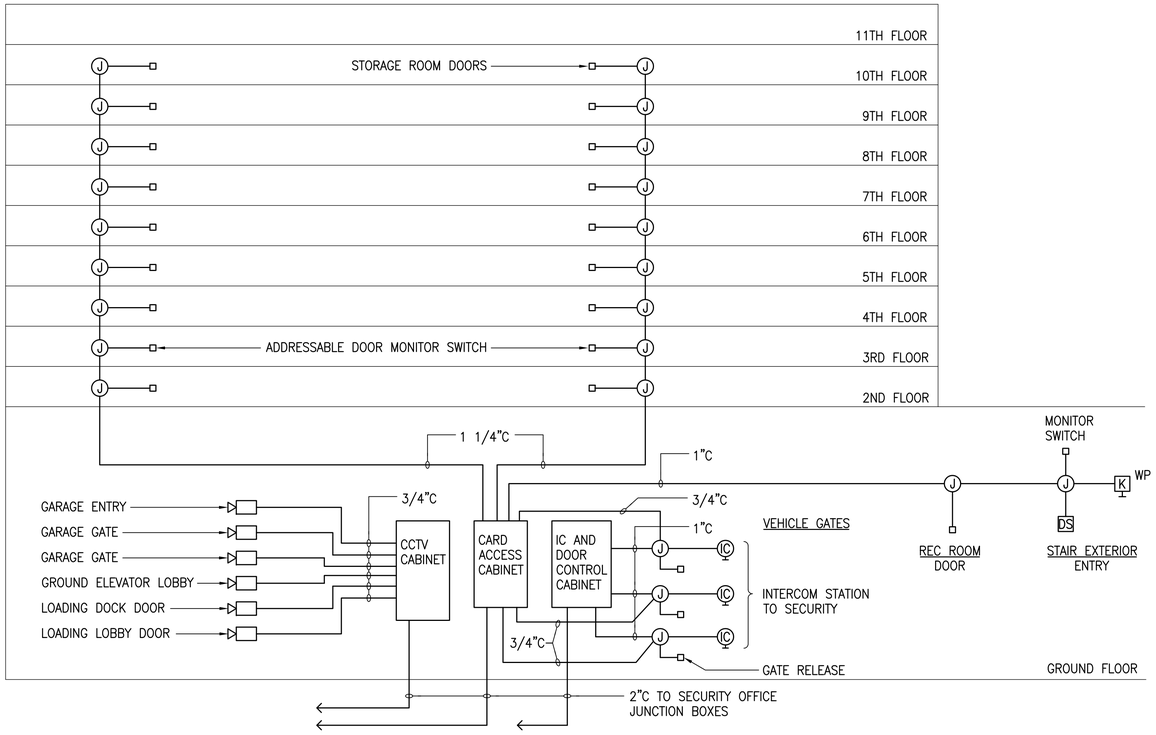

GARAGE SECURITY DIAGRAM

NO SCALE

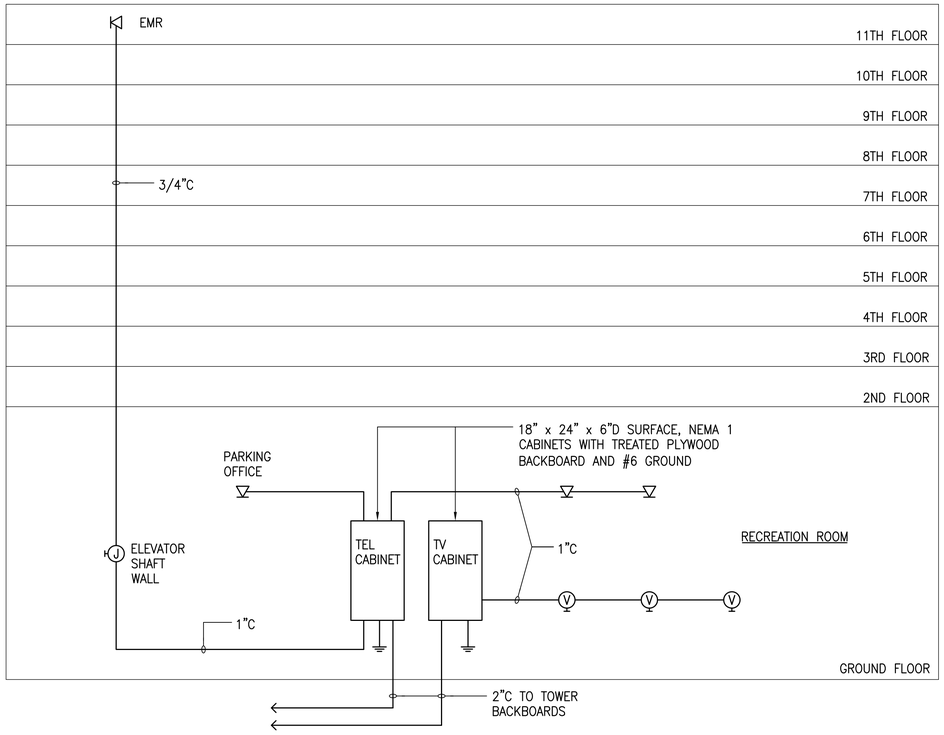

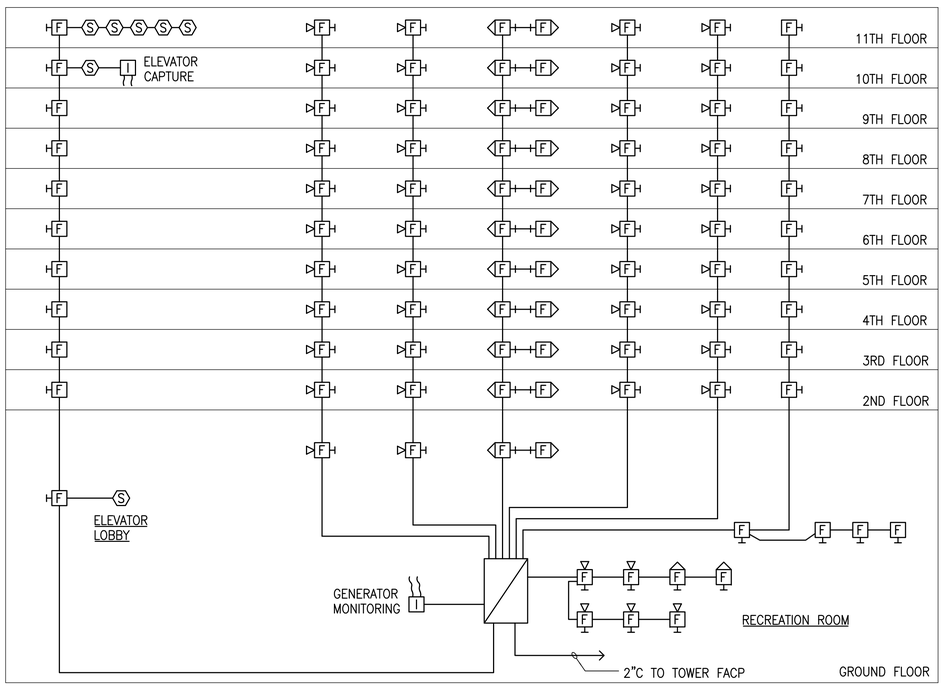

GARAGE FIRE ALARM DIAGRAM

NO SCALE

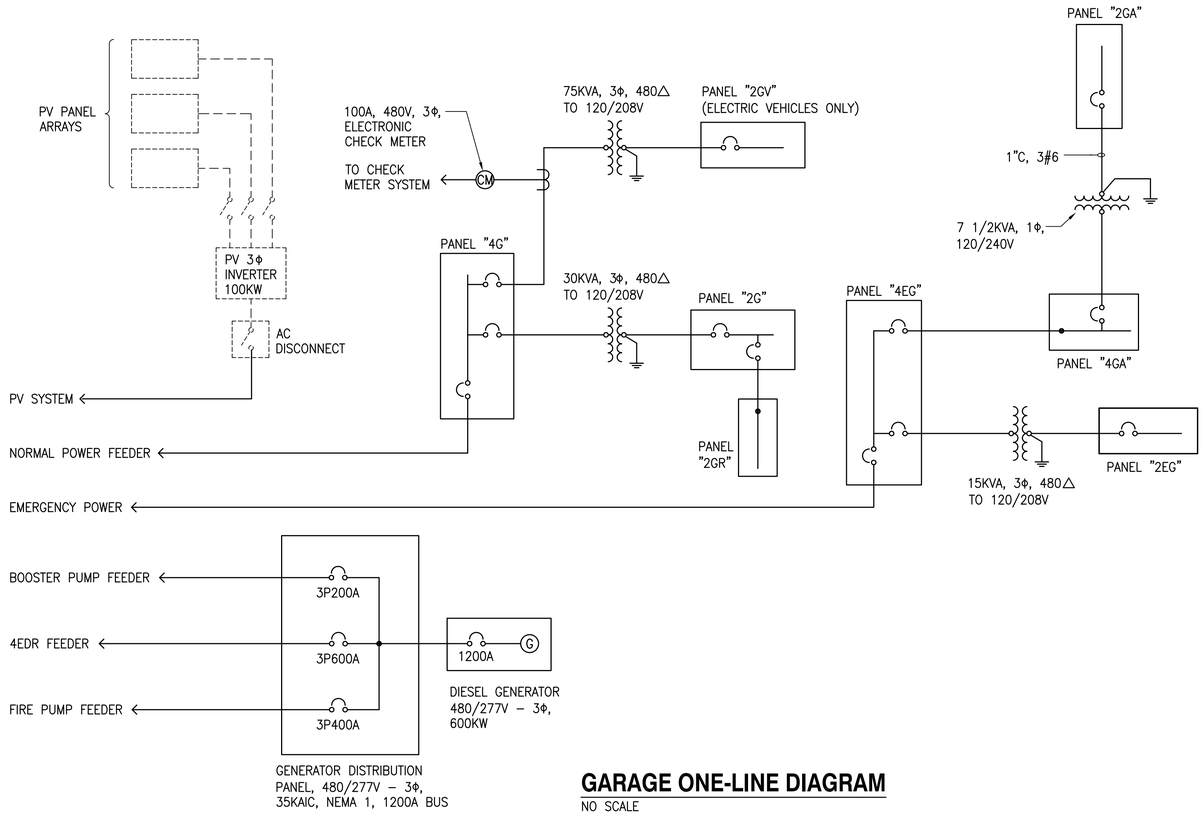

GARAGE ONE-LINE DIAGRAM

NO SCALE

NO.	DATE	REVISIONS
.	.	.

GLENN T. KARAMATSU ★ LICENSED PROFESSIONAL ENGINEER No. 4368-E ★ HAWAII, U.S.A.

Expiration Date: 4/30/2014

THIS PROJECT WAS PREPARED BY ME OR UNDER MY SUPERVISION AND CONSTRUCTION OF THIS PROJECT WILL BE UNDER MY SUPERVISION.

KAKAAKO WORKFORCE HOUSING PER SUBCHAPTER 4 OF 2011 MAUKA PLAN AND RULES

801 SOUTH STREET
HONOLULU, HAWAII

PARKING STRUCTURE ELECTRICAL DIAGRAMS

KAZU YATO, AIA & ASSOCIATES, INC.
2033 ROUNDTOP TERRACE
HONOLULU, HI 96822
TEL: (808) 945-0040
FAX: (808) 955-0052

DATE	DRAWN	CHECK	FILE
	MC	GK	

SHEET

E4.6

11/5/12–11:17 V:\001\001.528\001.528 E4.6.R06.dwg

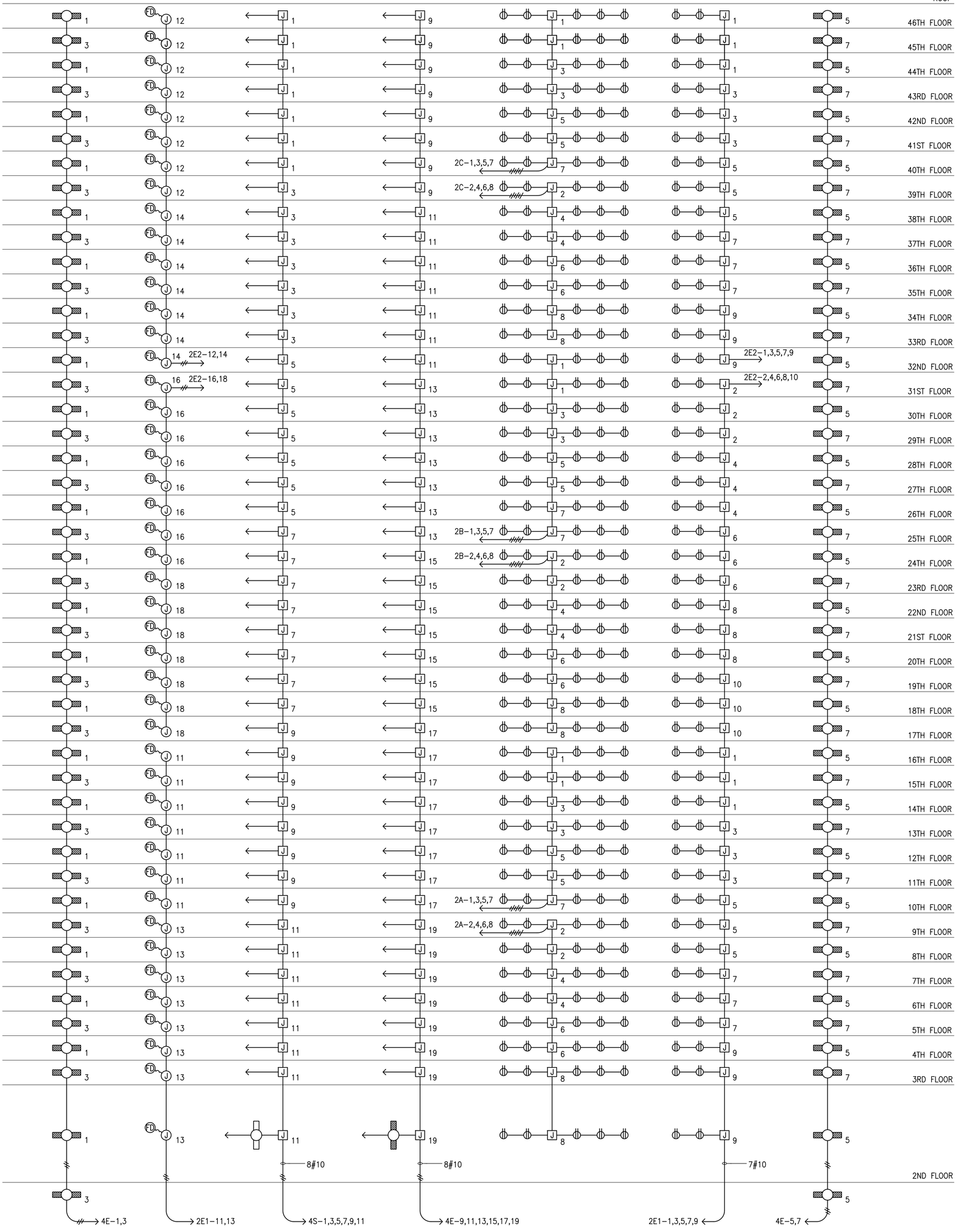

CORRIDOR POWER AND LIGHT RISER DIAGRAM

NO SCALE

E4.7

SHEET

DATE

DRAWN MC

CHECK GK

FILE

KAZU YATO, AIA & ASSOCIATES, INC.
2033 ROUNDTOP TERRACE
HONOLULU, HI 96822
TEL: (808) 945-0040
FAX: (808) 955-0052

KAKAAKO WORKFORCE HOUSING PER
SUBCHAPTER 4 OF 2011 MAUKA PLAN AND RULES

801 SOUTH STREET
HONOLULU, HAWAII

CORRIDOR POWER AND LIGHT RISER DIAGRAM

THIS PROJECT WAS PREPARED BY ME OR UNDER MY SUPERVISION AND CONSTRUCTION OF THIS PROJECT WILL BE UNDER MY SUPERVISION.

GLENN T. KARAMATSU
LICENSED PROFESSIONAL ENGINEER
No. 4368-E
HAWAII, U.S.A.
Expiration Date: 4/30/2014

NO.	DATE	REVISIONS
.	.	.

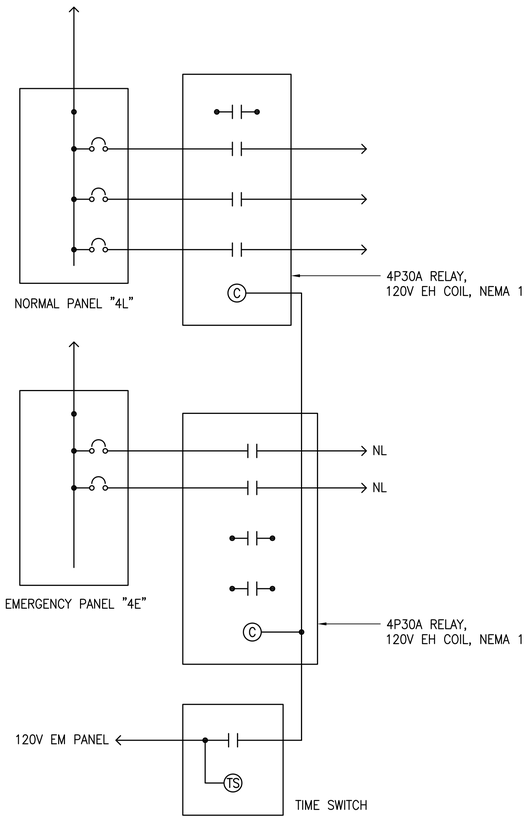

NL WIRING DIAGRAM

NO SCALE

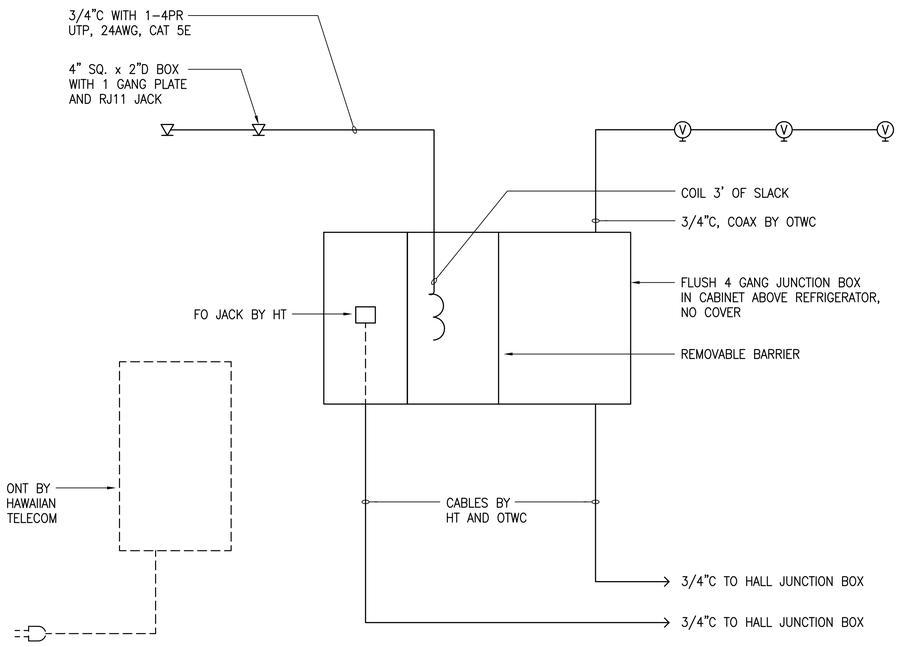

TYPICAL UNIT ONT DIAGRAM

NO SCALE

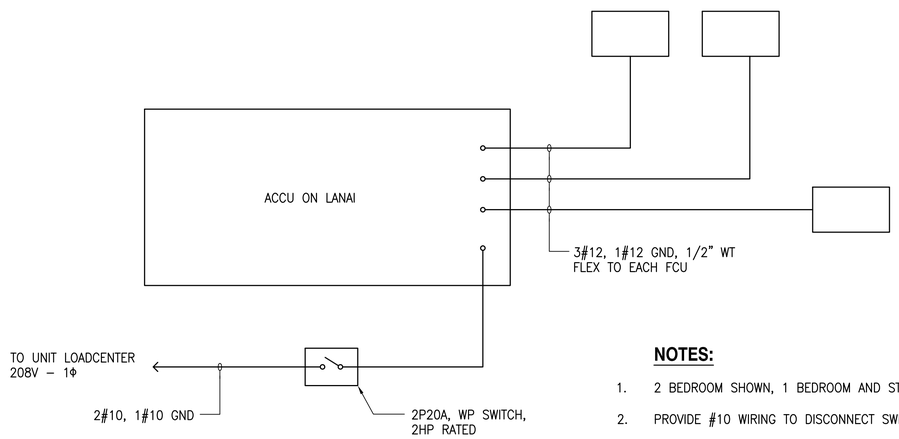

NOTES:

1. 2 BEDROOM SHOWN, 1 BEDROOM AND STUDIO SIMILAR.
2. PROVIDE #10 WIRING TO DISCONNECT SWITCH.

UNIT A/C WIRING DIAGRAM

NO SCALE

REVISIONS

NO.	DATE
.	.

GLENN T. KARAMATSU
LICENSED PROFESSIONAL ENGINEER
No. 4368-E
HAWAII, U.S.A.
Expiration Date: 4/30/2014

THIS PROJECT WAS PREPARED BY ME OR UNDER MY SUPERVISION AND CONSTRUCTION OF THIS PROJECT WILL BE UNDER MY SUPERVISION.

KAKAAKO WORKFORCE HOUSING PER
SUBCHAPTER 4 OF 2011 MAUKA PLAN AND RULES

801 SOUTH STREET
HONOLULU, HAWAII

TYPICAL UNIT ONT, LIGHTING CONTROL DIAGRAMS

KAZU YATO, AIA & ASSOCIATES,INC.
2033 ROOSEVELT TERRACE
HONOLULU, HI 96822
TEL: (808) 945-0040
FAX: (808) 955-0052

DATE	DRAWN	CHECK	FILE
	MC	CK	

SHEET

E4.9

11/5/12-11:17 Y:\001\001.528\001.528 E4.9R08.dwg

LUMINAIRE SCHEDULE

TYPE	DESCRIPTION	LAMPS	TYPE	DESCRIPTION	LAMPS
1	FLUORESCENT, RECESSED 2' X 4', CENTER PREFORATED GRILLE 4 1/2" DEEP, 277V BALLAST, DIRECT/INDIRECT DISTRIBUTION	2–F28T8	17	FLUORESCENT, SURFACE MOUNTED, 1 LAMP STRIP WITH WIREGUARD, 4' LONG, 120/277V BALLAST	1–F28T8
2	FLUORESCENT, RECESSED DOWNLIGHT, 6" APERATURE, HORIZONTAL LAMP, 277V BALLAST	1–PL26	18	LED, TRACK MOUNTED FITTING, WHITE FINISH, 30 DEGREE BEAM SPREAD, BUILT–IN DRIVER 120V	5W LED MINIMUM
3	FLUORESCENT, SURFACE MOUNTED, 2 LAMP, POLYCARBONATE LENS, 277V, BUILT–IN ULTRASONIC OCCUPANCY SENSOR, 50%/100% LIGHTING	2–F28T8	19	FLUORESCENT, WALL MOUNTED AT +8'–0", WET LABEL, 120V BALLAST	1–PL26
4	FLUORESCENT, SURFACE MOUNTED, 18" DIAMETER DRUM, 277V BALLAST	2–PL26	20	FLUORESCENT, SURFACE MOUNTED, 15" DIAMETER DRUM, 120V INSTANT ON BALLAST	2–PL26
5	FLUORESCENT, SURFACE MOUNTED, 1 LAMP, 4' WRAPAROUND POSITIVE LATCH, ACRYLIC LENS, 277V BALLAST	1–F28T8	21	FLUORESCENT, WALL MOUNTED AT +6'–6", OPAL CHANNEL, 24" LONG	2–PL18
6	HIGH PRESSURE SODIUM, GARAGE LIGHT, DAMP LABEL, GASKETED LENS, 277V HPF BALLAST	1–150W HPS COLOR IMPROVED	22	FLUORESCENT, VERTICAL WALL MOUNTED AT +7'–0", OPAL LENS, 120V BALLAST	1–PL18
7	FLUORESCENT, SURFACE MOUNTED, SHIELDED DOWN LIGHT ONLY, 4' LONG, SINGLE LAMP, 277V BALLAST, 6" X 6" CROSS SECTIONAL AREA, 3' AS SCALED	1–F28T8 PER 4'	23	FLUORESCENT, RECESSED SHOWER LIGHT, WET LABEL, 120V BALLAST, 6" DEEP	1–PL13
8	FLUORESCENT, SURFACE MOUNTED, DAMP LABEL, POLYCARBONATE LENS, 277V, 18" DIAMETER DRUM	2–PL26	24	FLUORESCENT, RECESSED LENSED DOWNLIGHT, 6" DIAMETER, 6" DEEP, 120V BALLAST	1–PL18
9	FLUORESCENT, SURFACE MOUNTED, 2 LAMP, POLYCARBONATE PRISMATIC DIFFUSER, 277V	2–F28T8	25	FLUORESCENT, SURFACE MOUNTED, 12" DIAMETER DRUM, 120V BALLAST	2–PL13
10	FLUORESCENT, SURFACE MOUNTED, 1 LAMP, 4', GASKETED HIGH IMPACT ACRYLIC LENS, FIBERGLASS HOUSING, 277V BALLAST	1–F28T8	26	FLUORESCENT, WALL MOUNTED AT 6"–9", WEL LABEL, 120V BALLAST, SHIELDED	1–PL18
11	HPS, 15' POLE LIGHT, SHIELDED, 277V BALLAST, WET LABEL, TYPE III DISTRIBUTION	1–100 HPS COLOR IMPROVED	27	FLUORESCENT, RECESSED 8" DOWNLIGHT CLEAR LENS, 277V BALLAST	2–PL26
12	HPS, WALL MOUNTED AT +12'–0", SHIELDED WALL PACK, 277V BALLAST, WET LABEL, BRONZE FINISH	1–70W HPS COLOR IMPROVED	28	FLUORESCENT, RECESSED WALL WASH, LOUVER 277V BALLAST, 6" WIDE, SINGLE LAMP, LENGTH AS SCALED	1–F28T8
13	FLUORESCENT, STEM MOUNTED, AT +8'–0", SOLID TOP REFLECTOR, 1 LAMP STRIP, 277V ELECTRONIC BALLAST	1–F28T8 PER 4'	29	FLUORESCENT, SURFACE MOUNTED SIMILAR TO TYPE 8 EXCEPT 1 LAMP, 277V	1–PL26
14	FLUORESCENT, WALL MOUNTED AT +6'–6", UP–DOWN LENS, 120V BALLAST, WHITE FINISH	1–F28T8	30	FLUORESCENT, WALL MOUNTED, ADJUSTABLE FLOODLIGHT, 277V, BRONZE FINISH	1–PL26
15	FLUORESCENT, RECESSED 2' X 2', 2 LAMP, 0.125" ACRYLIC LENS, 277V BALLAST	2–F28T8/U	H	EXIT LIGHTS, STENCIL FACE, RED LETTERS ON WHITE BACKGROUND, 120/277V, SEALED MAINTENANCE FREE BATTERIES	LED
16	FLUORESCENT, SURFACE MOUNTED, 2 LAMP, WRAPAROUND POSITIVE LATCH ACRYLIC LENS, 277V BALLAST	2–F28T8		EMERGENCY LIGHT AT 7'–6", 2 HEAD, 120/277V, WHITE FINISH, SEALED MAINTENANCE FREE BATTERIES	2–7W

REVISIONS
. .
DATE
. .
NO.
. .

GLENN T. KARAMATSU ★ LICENSED PROFESSIONAL ENGINEER No. 4368–E ★ HAWAII, U.S.A.
Expiration Date: 4/30/2014

THIS PROJECT WAS PREPARED BY ME OR UNDER MY SUPERVISION AND CONSTRUCTION OF THIS PROJECT WILL BE UNDER MY SUPERVISION.

KAKAAKO WORKFORCE HOUSING PER
SUBCHAPTER 4 OF 2011 MAUKA PLAN AND RULES

801 SOUTH STREET
HONOLULU, HAWAII

LUMINAIRE SCHEDULE

KAZU YATO, AIA & ASSOCIATES, INC.
2033 ROUNDTOP TERRACE
HONOLULU, HI 96822
TEL: (808) 945–0040
FAX: (808) 955–0052

DATE | DRAWN: MC | CHECK: GK | FILE

SHEET
E5.1

11/5/12–8:35 Y:\001\001.528\001.528 E5.1 SCH01.dwg

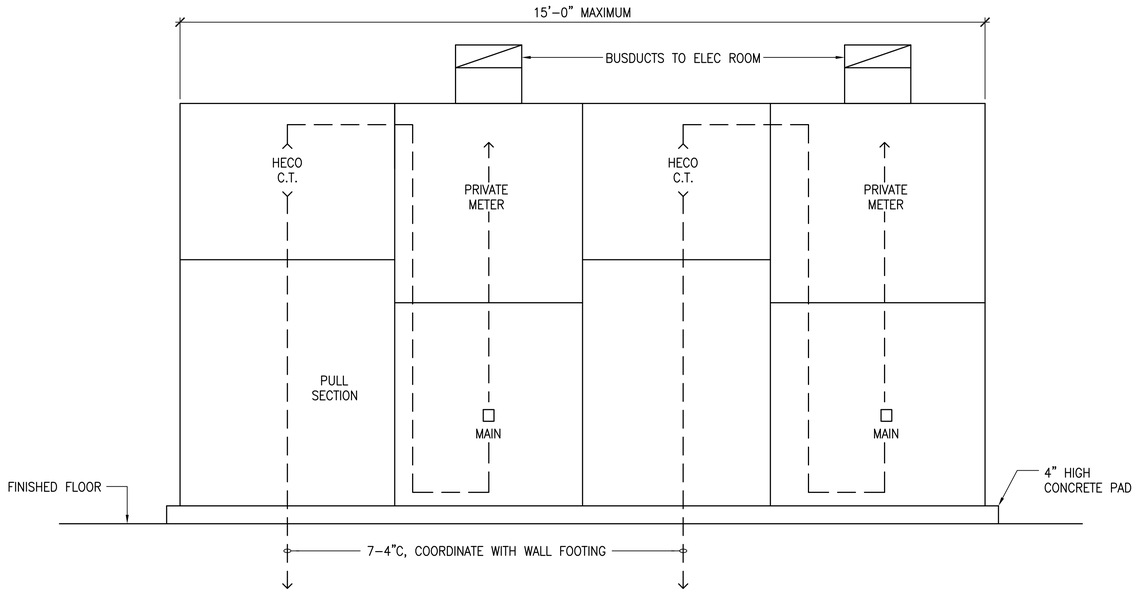

1 / E5.4 SWITCHBOARD #1 AND #2
SCALE: 3/4" = 1'–0"

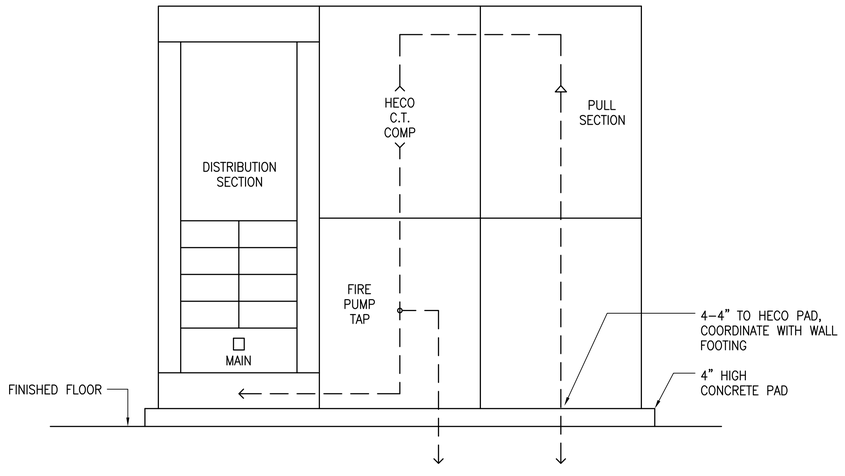

2 / E5.4 SWITCHBOARD #3
SCALE: 3/4" = 1'–0"

GRAPHIC SCALE

1' 0 1' 2' 3' 4' 5'

3/4" = 1'–0"

NO.	DATE	REVISIONS
.	.	.

GLENN T. KARAMATSU ★ LICENSED PROFESSIONAL ENGINEER No. 4368-E ★ HAWAII, U.S.A.
Expiration Date: 4/30/2014

THIS PROJECT WAS PREPARED BY ME OR UNDER MY SUPERVISION AND CONSTRUCTION OF THIS PROJECT WILL BE UNDER MY SUPERVISION.

KAKAAKO WORKFORCE HOUSING PER SUBCHAPTER 4 OF 2011 MAUKA PLAN AND RULES

801 SOUTH STREET
HONOLULU, HAWAII

SWITCHBOARD ELEVATIONS

KAZU YATO, AIA & ASSOCIATES, INC.
2033 ROUNDTOP TERRACE
HONOLULU, HI 96822
TEL: (808) 945-0040
FAX: (808) 955-0052

DATE	DRAWN	CHECK	FILE
	MC	GK	

SHEET

E5.4

11/5/12–8:48 Y:\2001\001.528\001.528 E5.4.004.dwg

March 19, 2015

Mr. Dan Nishikawa
President
Oliver McMillan Pacific Rim, LLC.
733 8th Avenue
San Diego, Ca 92101

Subject:
Symphony Honolulu
HCDA 15-217-55(k)(2) – 50% VLT Rule

Dear Dan,

As you have requested, we hereby offer our summary of recent discussions, findings, and professional opinion on Symphony Honolulu's design as regarding HCDA Chapter 217 Mauka Area Rules Section 15-217-55(k)(2) and its windows rule of 50% Visual Light Transmittance (VLT) for glazing above the ground floor level. To note, Symphony Honolulu's predominantly glass tower façade encloses 288 market rate apartments and 100 reserved apartments, providing high quality living environments for its residents.

HCDA's 50% VLT or greater rule as it relates to urban high-rise development creates a significant challenge and difficulty on design and engineering. This is because it is in direct conflict with both the State Energy Code and Basic LEED criteria required by HCDA Rules. State of Hawaii HCDA Mauka Area Rules 15-217-59(c)(1) reference Basic LEED minimum criteria of Energy and Atmosphere (EA) prerequisite which requires 10% improvement and increased performance above the American Society of Heating, Refrigerating, and Air-Conditioning Engineers (ASHRAE) 90.1-2007 standards. AHL and our specialist glazing and mechanical engineers have found no glazing product that can achieve both HCDA 50% VLT Rule and HCDA Basic LEED EA prerequisite of 10% increased energy performance requirements. Please know that this 10% minimum increase to energy performance is only a prerequisite of Basic LEED certification. Higher glazing performance requirements for LEED Silver, Gold, and Platinum would be needed to achieve EA credit 1 which, due to its significance in reduced energy consumption, offers the single highest total of points (19) among all other LEED credits.

While HCDA 15-217-59(c)(1) rule requires minimal Basic LEED Certification criteria, the consensus intent of professionals and goal of the public, community authorities, and governments worldwide is to achieve LEED rated certification levels of Silver, Gold, and Platinum certification. High-rise condominium projects similar to Symphony Honolulu would need to target energy savings for Silver at 30% increased performance, Gold would be in the range of 30%-48%, and Platinum would be 48% to a net zero building. Through our research, the limited available glazing products which meet HCDA's 50% VLT or higher Rule create significant hardship in the designing to HCDA's Basic LEED prerequisite . Additionally we find it not possible to pursue the desirable and highly recommended higher LEED Silver, Gold, or Platinum ratings with the current VLT Rule.

ARCHITECTS HAWAII
LIMITED

733 Bishop Street • Suite 3100
Honolulu, Hawaii 96813

(808) 523-9636 PHONE
(808) 521-3280 FAX
www.ahldesign.com

Joseph Farrell
David A. Miller
Stanley T. Yasumoto
Bettina Mehnert
William A. Brizee
W. Terry McFarland
David S. Bylund
Emile C. Alano
Lisa Y.T. Rapp
Brian T. Takahashi
Lester H. Ng

Ernest S. Shimizu
Jean-Louis Loveridge
Garret S. Horimoto
Michael G. Kim
Richard L. Sullivan
Brad K. Inovejas
Cynthia M. Work
Sara B. Belczak
Daniel S. Funakoshi
Daniel B. Moats
Charles H. Nishimoto
Raymond N. Okamoto
Joel L. Ganotisi
Myles M. Michibata
Ethan J. Twer

EMERITUS
Francis S. Haines
Alex Weinstein
N. Robert Hale
Arturo M. Lucio
Dennis Daniel

EXHIBIT 3

We believe in today's urban high-rise condominium environment that the enhanced views and open space quality that larger areas of glass provide creates the best possible living environments for residents and should be encouraged in planning rules.

HCDA's 50% VLT Rule not only presents difficulty and hardship for designers and engineers, but also for residents, developers, and Honolulu's economy overall. To meet both HCDA 50 % VLT and energy performance rules, buildings would need to be designed with significantly less glass, up to 50% solid walls, or a combination thereof. These designs would significantly reduce LEED goals and suggested credits for daylight and views to the outside; resulting in reduced overall quality of life for residents.

Planning rules which support energy conservation should do so through coordinated technical requirements. The data submitted herein verifies that basically higher VLT equates to less energy efficient glazing. This in turn translates to more costly mechanical systems needed to offset heat gain within the units and ultimately effects residents through higher monthly energy costs. More costly mechanical systems directly affect sales prices making residential units less affordable to the local population of Hawaii.

We have compiled the attached which to the best of our knowledge is a comparative spreadsheet of high-rise condominium projects under HCDA and City and County of Honolulu zoned ordinances; showing their associated tower glazing VLT and Solar Heat Gain Coefficient (SHGC) values. SHGC is the measurement of heat gain through the glazing and into the interior of the unit which in Hawaii requires mechanical cooling to offset. In general the higher the SHGC value the lower efficiency in energy performance. It is important to note a few general findings:

a. SHGC increases as the value of VLT increases.
b. No project on this list would comply to HCDA's 50% VLT Rule (nearest is 40% VLT).
c. Symphony's VLT value is above average amongst the group and offers on average a higher energy performing SHGC value.

Through our research, leading glazing manufacturers and experts recommend glazing VLT values are within 20-40% for balance of light quality, interior comfort, and energy conservation. An increase of VLT value above 40% will present undesirable heat gain, glare, and also cast heavy shadows off furnishings and other items within the building interior space. In these cases, building occupants were found to lower and keep window shade treatments closed during daylight hours which removes the views suggested by LEED and required additional energy for artificial light to balance the shaded natural light.

ARCHITECTS HAWAII
LIMITED

In conclusion, we believe that the 50% VLT or greater requirement within HCDA Mauka Area Rules 15-217-55(k) (2) should be reconsidered for future HCDA projects and should not apply to Symphony Honolulu. We further believe that should these 2 actions take place there would be no adverse effects on the community at large and in fact Symphony Honolulu's residents would benefit greatly.

Sincerely,

David Miller, AIA
Chairman and Principal
Architects Hawaii, Ltd.

cc: Serge Krivatsy, OM; Daniel Moats, AHL

Hawaii Highrise - Glazing Performance Data
March 12, 2015

Project	Zoning	Visual Light Transmittance (VLT)	Solar Heat Gain Coefficient (SHGC)	Manufacturer - Product
Watermark Waikiki	C&C of Honolulu	40%	0.32	Guardian - SunGuard LE 40
Trump Waikiki	C&C of Honolulu	38%	0.25	
Moana Pacific	HCDA	37%	0.31	Viracon VE1-42
Pacifica	HCDA	37%	0.33	Shanghai Pilkington
801 South	HCDA	35%	0.23	Shanghai Pilkington YBE-0140
Halekauwila	HCDA	34%	0.22	
Allure Waikiki	C&C of Honolulu	33%	0.23	China Southern CER 65-46
Waihonua 1	HCDA	33%	0.24	Shanghai Pilkington
Hawaiki Tower 1	HCDA	32%	0.24	Viracon VE2-40
Ritz Carlton Waikiki 1	C&C of Honolulu	31%	0.18	Viracon VUE1-30
Capitol Place	C&C of Honolulu	28%	0.18	Viracon VRE7-38
Symphony	HCDA	28%	0.19	Viracon VRE1-30
Anaha	HCDA	27%	0.17	Guardian-SNR43
Ritz Carlton Waikiki 2	C&C of Honolulu	27%	0.25	Viracon VE19-42
Waiea	HCDA	27%	0.17	Guardian-SNR43
One Alamoana	HCDA	23%	0.18	Viracon VRE26-38
Keola Lai	HCDA	22%	0.23	Viracon VE4-42
Waihonua 2	HCDA	21%	0.21	Shanghai Pilkington
Waihonua 3	HCDA	17%	0.22	Shanghai Pilkington
Hawaiki Tower 2	C&C of Honolulu	10%	0.17	Viracon VS2-14
Waihonua 4	HCDA	10%	0.20	Shanghai Pilkington
Koolani	HCDA	9%	0.16	Viracon VS8-14
Century Center	C&C of Honolulu	8%	0.20	Viracon VS1-08

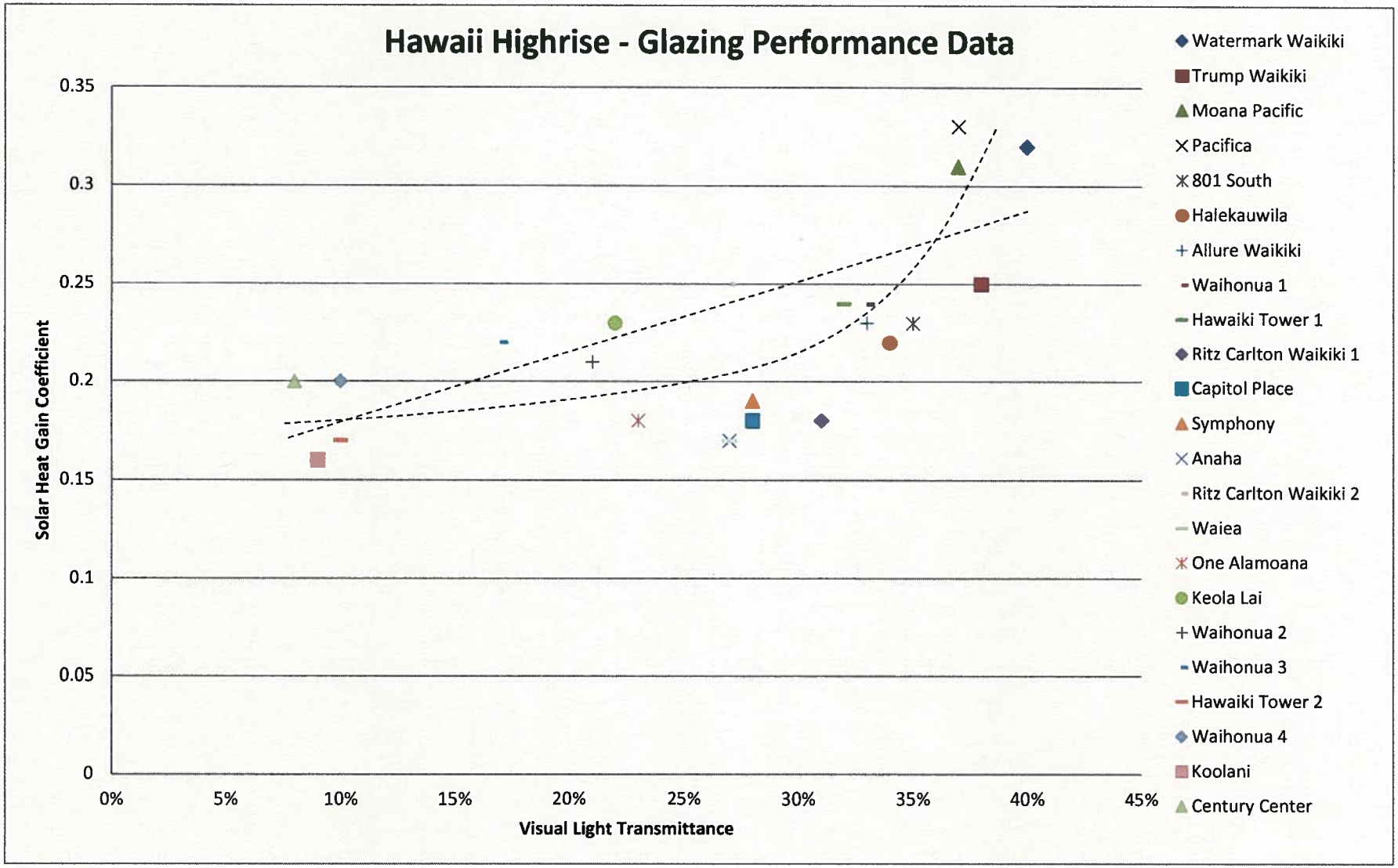
Hawaii Highrise - Glazing Performance Data
Solar Heat Gain Coefficient
0.35
0.3
0.25
0.2
0.15
0.1
0.05
0
0%
5%
10%
15%
20%
25%
30%
35%
40%
45%
Visual Light Transmittance
Watermark Waikiki
Trump Waikiki
Moana Pacific
Pacifica
801 South
Halekauwila
Allure Waikiki
Waihonua 1
Hawaiki Tower 1
Ritz Carlton Waikiki 1
Capitol Place
Symphony
Anaha
Ritz Carlton Waikiki 2
Waiea
One Alamoana
Keola Lai
Waihonua 2
Waihonua 3
Hawaiki Tower 2
Waihonua 4
Koolani
Century Center

Downtown Capital LLC
215 N. King Street, Suite 1000
Honolulu, Hawaii 96817
Phone (808) 526-2027 Fax (808) 526-2066

RECEIVED
2015 MAR 23 PM 12 08
HAWAII COMMUNITY
DEVELOPMENT
AUTHORITY

March 23, 2015

Mr. Anthony Ching
Executive Director
Hawaii Community Development Authority
547 Queen Street
Honolulu, Hawaii 96813

Dear Mr. Ching:

Re: **Development Permit No. KAK 12-109**

Enclosed are the following:

1) Letter to Mr. Anthony Ching from Downtown Capital LLC, dated March 23, 2015,

2) Letter from Hawaiian Dredging Construction Company, Inc. to Mr. Marshall Hung dated March 17, 2015 and

3) Visible Light Transmittance of Windows prepared by Hawaiian Dredging Construction Company, Inc.

Sincerely,

Downtown Capital LLC

RMH Real Estate LLC, its Member
Workforce Kakaako LLC, Managing Member

EXHIBIT 4

Downtown Capital LLC
215 N. King Street, Suite 1000
Honolulu, Hawaii 96817
Phone (808) 526-2027 Fax (808) 526-2066

March 23, 2015

Anthony J.H. Ching
Executive Director
Hawaii Community Development Authority
547 Queen Street
Honolulu, Hawai'i 96813

Re: Minor Change to Permit Application for
Development Permit No. KAK 12-109

Dear Director Ching,

On behalf of Downtown Capital LLC, this letter requests a minor change to our Application for Development Permit No. KAK-109 (Permit) to conform the Application to the approved and installed windows for the project.

The Permit was approved on December 5, 2012. Following the approval of the Permit, various ministerial approvals were granted in favor the project, including a final building permit. Construction of the project has been completed, and all of the windows for the project have been installed.

As described in the Application, 801 South St is not an entirely glass building. 67% of the building exterior is a solid hard surface. 20% of the building exterior is glass panels and doors setback four feet from the building face on lanais with a roof overhang. The remaining 13% of the building exterior is glass windows. None of the exterior surfaces are highly reflective and the windows and doors provide natural ventilation and light to every room in each apartment unit.

As stated in the Mauka Area Rules, the "visible light transmission level for windows" located above the ground floor is to be 50% or greater. Although our Application did not note the visible light transmission level for the windows, the windows installed on the project were described in our Application and approved by HCDA. Attached is the additional information for the Application that includes the methodology and calculation of the visible light transmission level for windows at 50.50%

Since the Permit was approved with the windows and has been relied upon, we request a conforming minor change to the Application to reflect, and thereby approve, the "visible light transmission level of the windows" for the installed windows as set forth herein. The Executive Director may approve the minor change under HAR § 15-217-90. The change does not seek to

increase the number dwelling units, introduce different land uses, request a larger land area, request a greater variance or change materials used in construction. Nor does the change reduce or eliminate any conditions in the Development Permit. On the contrary, the change conforms the Application to Permit and the approved construction materials.

For these reasons, we ask you to approve the minor change to the Application. Please let us know if you need any additional information from us.

Sincerely,

Downtown Capital LLC

MH59 LLC, its Member
Workforce Kakaako LLC, Managing Member

Attachment to the March 23, 2015 Letter for
Minor Change to Permit Application for
Development Permit No. KAK 12-109

The requirement regarding windows in Hawaii Administrative Rules, Section 15-217-55(k)(2) includes two sentences which are copied below in bold italics and followed by the additional Project information for the Application.

Window glazing shall be transparent with clear or limited UV tint so as to provide views outside of and into the building.

The Project window glazing composition is:
6mm clear heat strengthened glass substrate + limited light blue low-e coating on surface #2 + 12mm air space + 6mm clear substrate.

The window glazing is transparent with a limited UV light blue tint that provides views outside of and into the building.

Visible light transmission level of windows on the ground floor shall be seventy per cent or greater and on all other floors the visible light transmission level shall be fifty per cent or greater;

A window is defined by the Glass Association of North America as "An opening constructed in a wall or roof and functioning to admit light or air to an enclosure, usually framed and spanned with glass mounted to permit opening and closing."

The primary difference between a "window" and "window glazing" is the operability of the assembly. The optimal way to allow light into a space is by providing windows that have the ability to be opened. This operable function gives variability to the amount of daylight and allows the user to adjust the light to their individual preferences.

Since all opening that are constructed in the exterior wall of a project are windows the Project has included in its window calculations what is commonly referred to in Hawaii as "lanai doors".

Visible Light Transmission Level of Windows

There are two types of windows in the Project; a sliding lanai door and an awning window. The visible light transmission level of the windows in the calculation includes:
1) The Visible Light Transmittance of the window glazing;
2) The Visible Light Transmission of the opening created by sliding the operable lite; and
3) The dimensions of the window in the open position.

Calculation of the Visible Light Transmission Level of Sliding Lanai Doors

The sliding lanai doors consist of three lites; two fixed and one operable. When the operable lite is in the open position it decreases the visible light transmittance of the lite that is covered. The calculation to determine the visible light transmission of the sliding window is as follows:

Term Definitions:
W_1= Width of first fixed lite
W_O= Width of operable lite
W_2= Width of second fixed lite
H=Height of window
T_{vis}= Visible light transmittance of window glazing
T_O= Visible light transmittance of opening with no glazing
$T_{Sliding}$=Visible light transmission of effective sliding window
$A_{Sliding}$=Total effective area of sliding window

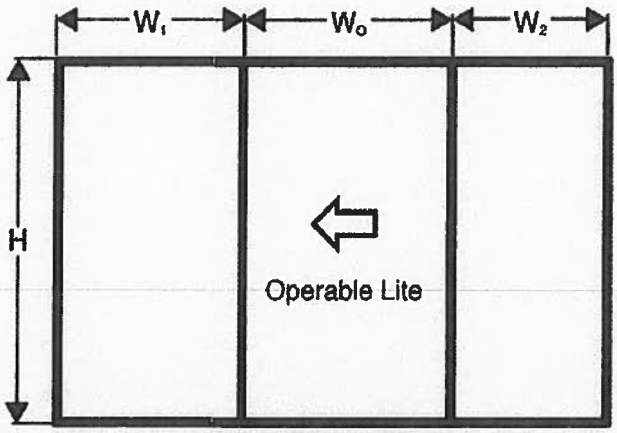

Sliding Window

Computation:

$$((W_1{*} + W_O + W_2){*}H) = A_{Sliding}$$

$$\frac{((W_1{*}H){*}(T_{vis}{*}T_{vis})) + ((W_O{*}H){*}T_O) + ((W_2{*}H){*}T_{vis})}{A_{Sliding}} = T_{Sliding}$$

Calculation of the Visible Light Transmission Level of Awning Windows

The awning windows consist of two types of window lites, fixed and operable. The components that are factored into the calculation are the Visible Light Transmittance of the window glazing and the visible light transmittance of the opening created by opening the awning style operable lite. The calculation to determine the visible light transmission level of the sliding window is as follows:

Term Definition:
W_A= Width of awning window
H=Height of window
O_T=Opening size at top of lite when window is open
O_B=Opening size at bottom of lite when window is open
T_{vis}= Visible light transmittance of window glazing
T_o= Visible light transmittance of opening with no glazing
T_{Awning}=Visible light transmission of effective awning window surface
A_{Awning}=Total effective area of awning window
$T_{Windows}$=Visible light transmission of windows

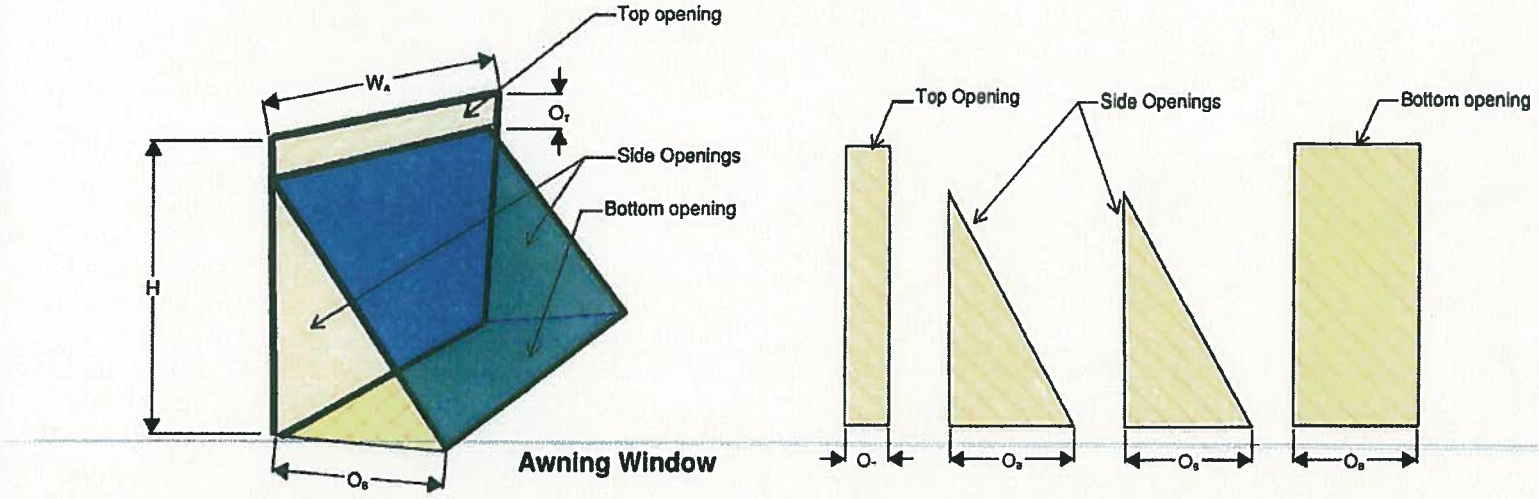

Computations:

$$(W_A*H)+(W_A*O_T)+(W_A*O_B)+((H*O_B)/2)+((H*O_B)/2) = A_{Awning}$$

$$\frac{((W_A*H)*T_{vis})+((W_A*O_T)*T_O)+((W_A*O_B)*T_O)+(((H*O_B)/2)*T_O)+(((H*O_B)/2)*T_O)}{A_{Awning}} = T_{Awning}$$

Calculation of the Total Visible Light Transmission Level of Windows

The total visible light transmittance of windows for the Project is calculated by taking the combined visible light transmission of both sliding and awning windows together.

Term Definition:
$A_{Sliding}$=Total effective area of sliding window
A_{Awning}=Total effective area of awning window
$T_{Sliding}$=Visible light transmission of effective sliding window
T_{Awning}=Visible light transmission of effective awning window surface
$T_{Windows}$=Visible light transmission of windows

Computation:

$$\frac{(T_{Sliding} * A_{Sliding}) + (T_{Awning} * A_{Awning})}{(A_{Sliding} + A_{Awning})} = T_{Windows}$$

PO Box 4088
Honolulu, HI 96812-4088
Phone: (808) 735-3211
www.hdcc.com

HAWAIIAN DREDGING
CONSTRUCTION COMPANY, INC.

March 17, 2015

Mr. Marshall W. Hung
Downtown Capital LLC
215 N. King Street, Suite 1000
Honolulu, Hawaii 96817

Re: 801 South Street Condominium Project (Project)

Dear Mr. Hung:

Hawaii Community Development Authority (HCDA) has recently inquired about the compliance of the Project with certain architectural design provisions from the Mauka Area Rules, Chapter 217, Title 15 of the Hawaii Administrative Rules, specifically, whether the windows in the residential tower meet the requirement of Subpart (k) of Section 15-217-55 of the Mauka Rules.

The six requirements relating to windows contained in Subpart (k) have been reviewed by Hawaiian Dredging and its glass subcontractor, Kalu Glass, and we have determined that the residential tower fully complies therewith:

(1) Highly-reflective, mirrored, and opaque window glazing are prohibited.

HDCC Response: The residential tower does not contain any windows with highly-reflective, mirrored, or opaque glass.

(2) Window glazing shall be transparent with clear or limited UV tint so as to provide views outside of and into the building. Visible light transmission level of windows on the ground floor shall be seventy percent or greater and on all other floors the visible transmission level shall be fifty percent or greater.

HDCC Response: All window glazing installed at the residential tower is transparent with limited UV tint and provide views outside of and into the building. The average visible light transmission level of windows throughout the Project meet the 50% requirement set forth in this subsection, taking into consideration that many of the windows are operable.

(3) For floors one through ten, all principal building windows shall be operable.

HDCC Response: All principal windows for floors 1 through 10 of the residential tower are operable.

(4) Vinyl window frames are prohibited, except for Figures BT.1 to BT.3, dated September 2011, made a part of this chapter, and attached to the end of this chapter.

HDCC Response: There are no vinyl window frames installed in this Project.

(5) Pop-in muntins are prohibited below the third floor.

HDCC Response: There are no pop-in muntins installed in this Project.

(6) Window grilles are prohibited except at window openings to podium parking or on building elevations facing alley.

HDCC Response: There are no window grills installed in this Project.

Based on the foregoing, the residential tower is in full compliance with all of the window design requirements in the Mauka Area Rules. Should you have any questions regarding this letter, please do not hesitate to contact me.

Very truly yours,

Eric H. Hashizume
Vice President- Building Division

801A

Visible Light Transmittance of Windows: 50.50%

Window Type	Location	Quantity	Type	% of Light	Height	Width	Awning Open Bottom	Awning Open Top	Glazed Area	Open Area	Window Area	VLT of Awning	VLT of Opening	Total Area	Equivalent 100% VLT Area
W1	Bath	364 ea	Awning	35.00%	14 in	35 in	5 in	2 in	3.38 sf	2.18 sf	5.55 sf	60.46%	-	2,022 sf	1,222 sf
W2aa	Bedroom	637 ea	Awning	35.00%	13 in	35 in	6 in	3 in	3.29 sf	2.03 sf	5.32 sf	59.83%	-	3,387 sf	2,026 sf
W2ab	Bedroom	637 ea	Fixed	35.00%	13 in	35 in			3.29 sf	0.00 sf	3.29 sf	-	35.00%	2,093 sf	733 sf
W2b	Bedroom	637 ea	Fixed	35.00%	20 in	71 in			9.83 sf	0.00 sf	9.83 sf	-	35.00%	6,259 sf	2,191 sf
W2ca	Bedroom	637 ea	Awning	35.00%	13 in	35 in	6 in	3 in	3.29 sf	2.03 sf	5.32 sf	59.83%	-	3,387 sf	2,026 sf
W2cb	Bedroom	637 ea	Fixed	35.00%	13 in	35 in			3.29 sf	0.00 sf	3.29 sf	-	35.00%	2,093 sf	733 sf
W3aa	Bedroom	90 ea	Awning	35.00%	13 in	29 in	6 in	3 in	2.73 sf	1.78 sf	4.51 sf	60.67%	-	406 sf	246 sf
W3ab	Bedroom	90 ea	Fixed	35.00%	13 in	29 in			2.73 sf	0.00 sf	2.73 sf	-	35.00%	246 sf	86 sf
W3b	Bedroom	90 ea	Fixed	35.00%	20 in	59 in			8.16 sf	0.00 sf	8.16 sf	-	35.00%	734 sf	257 sf
W3ca	Bedroom	90 ea	Awning	35.00%	13 in	29 in	6 in	3 in	2.73 sf	1.78 sf	4.51 sf	60.67%	-	406 sf	246 sf
W3cb	Bedroom	90 ea	Fixed	35.00%	13 in	29 in			2.73 sf	0.00 sf	2.73 sf	-	35.00%	246 sf	86 sf
W4a	Bedroom	182 ea	Awning	35.00%	23 in	41 in	11 in	4 in	6.51 sf	4.87 sf	11.38 sf	62.82%	-	2,071 sf	1,301 sf
W4b	Bedroom	182 ea	Fixed	35.00%	45 in	41 in			12.73 sf	0.00 sf	12.73 sf	-	35.00%	2,318 sf	811 sf
W4c	Bedroom	182 ea	Awning	35.00%	23 in	41 in	4 in	0 in	6.51 sf	1.77 sf	8.28 sf	48.90%	-	1,507 sf	737 sf
W5aa	Elevator Lobby	45 ea	Awning	35.00%	20 in	56 in	8 in	4 in	7.73 sf	4.20 sf	11.93 sf	57.90%	-	537 sf	311 sf
W5ab	Elevator Lobby	45 ea	Awning	35.00%	20 in	56 in	8 in	4 in	7.73 sf	4.20 sf	11.93 sf	57.90%	-	537 sf	311 sf
W5b	Elevator Lobby	45 ea	Fixed	35.00%	72 in	111 in			55.63 sf	0.00 sf	55.63 sf	-	35.00%	2,503 sf	876 sf
W6	Elevator Lobby	45 ea	Fixed	35.00%	96 in	17 in			11.08 sf	0.00 sf	11.08 sf	-	35.00%	499 sf	175 sf
W6R	Elevator Lobby	45 ea	Fixed	35.00%	96 in	17 in			11.08 sf	0.00 sf	11.08 sf	-	35.00%	499 sf	175 sf
W7aa	Lounge 2	2 ea	Awning	35.00%	14 in	48 in	8 in	3 in	4.67 sf	3.44 sf	8.11 sf	62.60%	-	16 sf	10 sf
W7ab	Lounge 2	2 ea	Awning	35.00%	14 in	48 in	8 in	3 in	4.67 sf	3.44 sf	8.11 sf	62.60%	-	16 sf	10 sf
W7b	Lounge 2	2 ea	Fixed	35.00%	88 in	96 in			58.67 sf	0.00 sf	58.67 sf	-	35.00%	117 sf	41 sf
W7Raa	Lobby/Garden	1 ea	Awning	35.00%	14 in	43 in	8 in	3 in	4.13 sf	3.14 sf	7.27 sf	63.06%	-	7 sf	5 sf
W7Rab	Lobby/Garden	1 ea	Awning	35.00%	14 in	43 in	8 in	3 in	4.13 sf	3.14 sf	7.27 sf	63.06%	-	7 sf	5 sf
W7Rb	Lobby/Garden	1 ea	Fixed	35.00%	88 in	85 in			51.94 sf	0.00 sf	51.94 sf	-	35.00%	52 sf	18 sf
W8aa	Lounge 2	1 ea	Awning	35.00%	14 in	42 in	8 in	3 in	4.08 sf	3.11 sf	7.19 sf	63.11%	-	7 sf	5 sf
W8ab	Lounge 2	1 ea	Awning	35.00%	14 in	42 in	8 in	3 in	4.08 sf	3.11 sf	7.19 sf	63.11%	-	7 sf	5 sf
W8ac	Lounge 2	1 ea	Awning	35.00%	14 in	42 in	8 in	3 in	4.08 sf	3.11 sf	7.19 sf	63.11%	-	7 sf	5 sf
W8ad	Lounge 2	1 ea	Awning	35.00%	14 in	42 in	8 in	3 in	4.08 sf	3.11 sf	7.19 sf	63.11%	-	7 sf	5 sf
W8b	Lounge 2	1 ea	Fixed	35.00%	88 in	14 in			8.56 sf	0.00 sf	8.56 sf	-	35.00%	9 sf	3 sf
W8Raa	Lobby/Garden	1 ea	Awning	35.00%	14 in	45 in	8 in	3 in	4.35 sf	3.26 sf	7.61 sf	62.86%	-	8 sf	5 sf
W8Rab	Lobby/Garden	1 ea	Awning	35.00%	14 in	45 in	8 in	3 in	4.35 sf	3.26 sf	7.61 sf	62.86%	-	8 sf	5 sf
W8Rac	Lobby/Garden	1 ea	Awning	35.00%	14 in	45 in	8 in	3 in	4.35 sf	3.26 sf	7.61 sf	62.86%	-	8 sf	5 sf
W8Rad	Lobby/Garden	1 ea	Awning	35.00%	14 in	45 in	8 in	3 in	4.35 sf	3.26 sf	7.61 sf	62.86%	-	8 sf	5 sf
W8Rb	Lobby/Garden	1 ea	Fixed	35.00%	88 in	179 in			109.39 sf	0.00 sf	109.39 sf	-	35.00%	109 sf	38 sf
W9aa	Manager's Office	2 ea	Awning	35.00%	14 in	49 in	8 in	3 in	4.76 sf	3.50 sf	8.26 sf	62.53%	-	17 sf	10 sf
W9ab	Manager's Office	2 ea	Awning	35.00%	14 in	49 in	8 in	3 in	4.76 sf	3.50 sf	8.26 sf	62.53%	-	17 sf	10 sf
W9ac	Manager's Office	2 ea	Awning	35.00%	14 in	49 in	8 in	3 in	4.76 sf	3.50 sf	8.26 sf	62.53%	-	17 sf	10 sf
W9b	Manager's Office	2 ea	Fixed	35.00%	88 in	147 in			89.83 sf	0.00 sf	89.83 sf	-	35.00%	180 sf	63 sf
W9Aaa	Main Lobby	1 ea	Awning	35.00%	14 in	49 in	8 in	3 in	4.76 sf	3.50 sf	8.26 sf	62.53%	-	8 sf	5 sf
W9Aab	Main Lobby	1 ea	Awning	35.00%	14 in	49 in	8 in	3 in	4.76 sf	3.50 sf	8.26 sf	62.53%	-	8 sf	5 sf
W9Aac	Main Lobby	1 ea	Awning	35.00%	14 in	49 in	8 in	3 in	4.76 sf	3.50 sf	8.26 sf	62.53%	-	8 sf	5 sf
W9Ab	Main Lobby	1 ea	Fixed	35.00%	88 in	148 in			90.44 sf	0.00 sf	90.44 sf	-	35.00%	90 sf	32 sf
W10a	Main Lobby	1 ea	Awning	35.00%	14 in	70 in	8 in	3 in	6.81 sf	4.67 sf	11.47 sf	61.44%	-	11 sf	7 sf
W10b	Main Lobby	1 ea	Fixed	35.00%	88 in	70 in			42.78 sf	0.00 sf	42.78 sf	-	35.00%	43 sf	15 sf
W11	Main Lobby	1 ea	Fixed	80.00%	88 in	79 in			48.28 sf	0.00 sf	48.28 sf	-	80.00%	48 sf	39 sf

801A

Visible Light Transmittance of Windows: 50.50%

Window Type	Location	Quantity	Type	% of Light	Height	Width	Awning Open Bottom	Awning Open Top	Glazed Area	Open Area	Window Area	VLT of Awning	VLT of Opening	Total Area	Equivalent 100% VLT Area
W12	Main Lobby	1 ea	Fixed	80.00%	88 in	146 in			89.22 sf	0.00 sf	89.22 sf	-	80.00%	89 sf	71 sf
W12R	Main Lobby	1 ea	Fixed	80.00%	88 in	168 in			102.67 sf	0.00 sf	102.67 sf	-	80.00%	103 sf	82 sf
W13aa	Main Lobby	1 ea	Awning	35.00%	14 in	46 in	8 in	3 in	4.42 sf	3.31 sf	7.73 sf	62.80%	-	8 sf	5 sf
W13ab	Main Lobby	1 ea	Awning	35.00%	14 in	46 in	8 in	3 in	4.42 sf	3.31 sf	7.73 sf	62.80%	-	8 sf	5 sf
W13ac	Main Lobby	1 ea	Fixed	35.00%	14 in	46 in			4.42 sf	0.00 sf	4.42 sf	-	35.00%	4 sf	2 sf
W13b	Main Lobby	1 ea	Fixed	35.00%	88 in	102 in			62.33 sf	0.00 sf	62.33 sf	-	35.00%	62 sf	22 sf
W13c	Main Lobby Side Door	1 ea	Open	100.00%	88 in	36 in			22.00 sf	0.00 sf	22.00 sf	-	100.00%	22 sf	22 sf
W46a	Side Entry	1 ea	Fixed	35.00%	14 in	131 in			12.74 sf	0.00 sf	12.74 sf	-	35.00%	13 sf	4 sf
W46ba	Side Entry	1 ea	Fixed	35.00%	88 in	95 in			58.06 sf	0.00 sf	58.06 sf	-	35.00%	58 sf	20 sf
W46bb	Side Entry Door	1 ea	Open	100.00%	88 in	36 in			22.00 sf	0.00 sf	22.00 sf	-	100.00%	22 sf	22 sf
D19	Studio	45 ea	Open	100.00%	84 in	41 in			24.06 sf	0.00 sf	24.06 sf	-	100.00%	1,083 sf	1,083 sf
D19R	Studio	45 ea	Open	100.00%	84 in	41 in			24.06 sf	0.00 sf	24.06 sf	-	100.00%	1,083 sf	1,083 sf
D20a	Living Room	318 ea	Fixed	35.00%	96 in	29 in			19.33 sf	0.00 sf	19.33 sf	-	35.00%	6,148 sf	2,152 sf
D20b	Living Room	318 ea	Open	100.00%	96 in	39 in			26.00 sf	0.00 sf	26.00 sf	-	100.00%	8,268 sf	8,268 sf
D20c	Living Room	318 ea	Fixed	12.25%	96 in	36 in			24.00 sf	0.00 sf	24.00 sf	-	12.25%	7,632 sf	935 sf
D21a	Living Room	227 ea	Fixed	35.00%	96 in	29 in			19.33 sf	0.00 sf	19.33 sf	-	35.00%	4,389 sf	1,536 sf
D21b	Living Room	227 ea	Open	100.00%	96 in	39 in			26.00 sf	0.00 sf	26.00 sf	-	100.00%	5,902 sf	5,902 sf
D21c	Living Room	227 ea	Fixed	12.25%	96 in	36 in			24.00 sf	0.00 sf	24.00 sf	-	12.25%	5,448 sf	667 sf
D24a	Main Lobby	1 ea	Fixed	80.00%	18 in	146 in			18.25 sf	0.00 sf	18.25 sf	-	80.00%	18 sf	15 sf
D24ba	Main Lobby	1 ea	Fixed	64.00%	84 in	37 in			21.29 sf	0.00 sf	21.29 sf	-	64.00%	21 sf	14 sf
D24bb	Main Lobby	1 ea	Open	100.00%	84 in	73 in			42.58 sf	0.00 sf	42.58 sf	-	100.00%	43 sf	43 sf
D24bc	Main Lobby	1 ea	Fixed	64.00%	84 in	37 in			21.29 sf	0.00 sf	21.29 sf	-	64.00%	21 sf	14 sf
														73,033 sf	36,883 sf

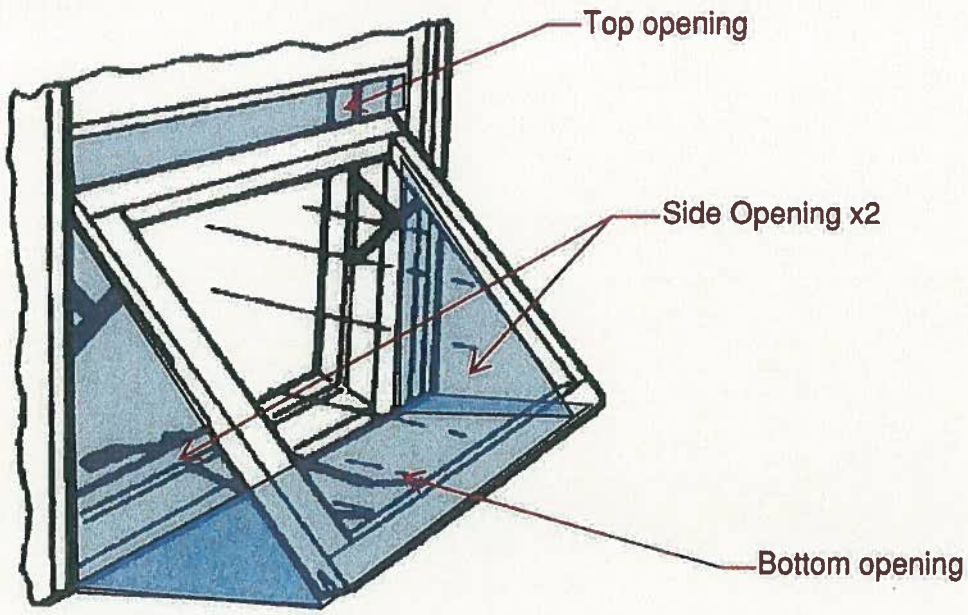
Top opening
Side Opening x2
Bottom opening

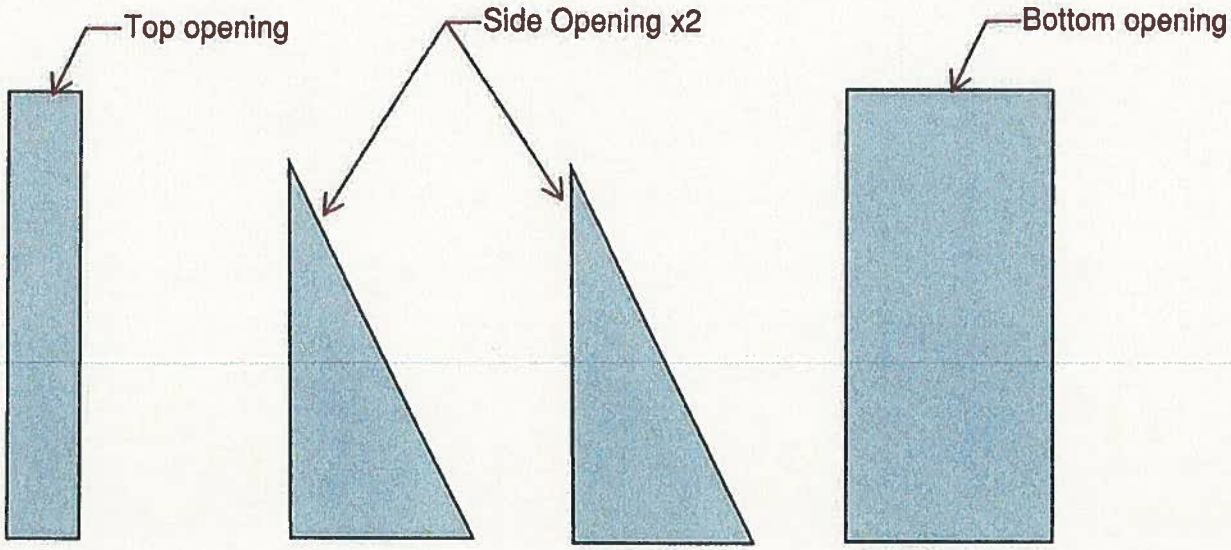
Top opening
Side Opening x2
Bottom opening

GEORGE I. ATTA, FAICP
DIRECTOR

No. 15-038
TEMPORARY

Expiration Date: APR 10 2016

CERTIFICATE OF OCCUPANCY

CITY AND COUNTY OF HONOLULU
DEPARTMENT OF PLANNING AND PERMITTING
BUILDING DIVISION

801 SOUTH APARTMENT AND GARAGE
NAME AND/OR DESCRIPTION OF STRUCTURE

OWNER Downtown Capital, LLC ADDRESS 215 N. King Street

BUILDING ADDRESS 801 South Street

TAX MAP KEY 2-1-047: 003 MAJOR OCCUPANCY GROUP R-2, S-2

USE ZONE Hawaii Community Development Authority TYPE OF CONSTRUCTION 1A

SPECIAL DESIGNATION None

APPLICABLE CODE 2006 IBC PERMIT NO. 726702, 731711 DATE 07/01/13, 09/05/13

REMARKS:

Automatic sprinkler system throughout Residential Tower only (Section 403.2).

ALLOWANCE FOR:
[ ] Automatic Sprinkler System
[ ] Separation on _____ Sides
[ ] Area Separation Wall
[ ] Frontage Increase _____ %

The above-described structure has been inspected and the following occupancy thereof is hereby authorized:

OCCUPANCY		Floor Area (Sq. Ft.)	Maximum Allowable Occupant Load (Persons)
1st Floor	Residential Tower B, Office, Lobby R-2, Apartments (5 Units)	13,891	
2nd Floor thru 8th Floor	R-2, Apartments (14 Units Per Floor)	11,326 (Per Floor)	
9th Floor thru 46th Floor	R-2, Apartments	11,315 (Per Floor)	
Roof	B, Elevator Machine Room	659	
1st Floor	Garage A-3, Recreation Room S-2, Parking (31 Stalls)	25,430	294
2nd Floor thru 8th Floor	S-2, Parking (90 Stalls Per Floor)	25,150 (Per Floor)	
9th Floor	S-2, Parking (89 Stalls)	25,150	
10th Floor	S-2, Parking (90 Stalls)	25,150	
11th Floor	S-2, Parking (75 Stalls)	20,931	

TEMPORARY

By: _____ 4.10.15
CHIEF BUILDING INSPECTOR DATE

Approved: _____ 4/10/15
for DIRECTOR DATE

This certificate must be posted and permanently maintained in a conspicuous place at or close to the entrance of the building or structure referred to above.

BSD-60 (Rev. 1/05)

EXHIBIT 5

Glazing and Energy Analysis Report

Relating to Visual Light Transmittance (VLT) and Leadership in Energy and Environmental Design (LEED) requirements of the Mauka Area Rules

Prepared By:

55 Merchant Street, Suite 1812

Honolulu, Hawaii 96813

July 20, 2015

Table of Contents

Abbreviations and Definitions 3

I. Executive Summary 4

II. Introduction 5

III. Applicable Code Requirements 6

IV. Energy Modeling 9

V. Glazing Product Availability 11

VI. Energy Efficiency 12

VII. Conclusion 12

Appendices

HAP Analyses Reports ..... Appendix A

Detailed Code Analysis ..... Appendix B

Data Sheets ..... Appendix C

Abbreviations and Definitions

For the purposes of this report, abbreviations and definitions are as follows:

ASHRAE - American Society of Heating, Refrigerating, and Air-Conditioning Engineers
ANSI/ASHRAE/IES Standard 90.1-2007 | Energy Standard for Buildings Except Low-Rise Residential Buildings

Baseline - The building design with the minimum acceptable energy efficiency. Guidelines are provided in ASHRAE 90.1.

Glazing - An assembly of glass that serves as the exterior window.

IECC - International Energy Conservation Code
IECC 2006 | Chapter 5 – Commercial Energy Efficiency

LEED - Leadership in Energy and Environmental Design
LEED 2009 for New Construction | Energy and Atmosphere | Prerequisite 2 – Minimum Energy Performance

MAR - Mauka Area Rules
HAR §15-217
Located under: Hawaii Administrative Rules | Department of Business, Economic Development and Tourism | Hawaii Community Development Authority

ROH - Revised Ordinances of Honolulu | Chapter 32 – Building Energy Conservation Code

SHGC - Solar Heat Gain Coefficient
Number between 0 and 1 describing how much heat the glazing assembly absorbs from the sun. Lower values indicate less heat absorption from the sun, which is generally favorable in Hawaii.

U-value - An insulative property of an assembly, such as a glass window. Lower values indicate less heat absorption between the exterior and the building envelope, which is favorable.

VLT - Visible Light Transmittance
Percentage of visible light allowed through a glazing assembly.

I. Executive Summary

Concerns have been expressed that the requirements in the Mauka Area Rules (MAR) contained in the Hawaii Administrative Rules (HAR) are so stringent that it inadvertently prohibits certain types of building designs. The requirements in question are visible light transmittance (VLT) minimums and LEED energy efficiency minimums. The concern being that the combination of requirements restricts the types of allowable glazing products to the extent that there may be no readily available glazing product meeting both requirements for an all glass building.

An updated building energy model simulation for the Symphony Honolulu project conducted using the actual glazing selection for the project shows a 13.0% improvement in building energy performance, which is 3.0% higher than the LEED minimum. The glazing in the Symphony Honolulu project meets the LEED requirements, but does not meet the VLT requirement of the MAR; however, energy modeling of other glazing options has shown it possible to meet both the 50% VLT required by the MAR and the 10% improvement over baseline energy performance required by LEED. Several glazing options were explored that meet the VLT requirements of the MAR and exceed the baseline energy performance by 10.3% to 10.7%. Based on these results, we believe that the VLT requirement of the MAR does not excessively limit building design. Creative building designs like a high-rise tower with all-glass exteriors are still possible.

There are some potential disadvantages caused by requiring high VLT values. Glazing with high VLT does not always provide low external reflectance, which is the presumed intent of the VLT requirement. One concern is that high VLT glazing may reduce the privacy of the residential units. Another concern is that higher VLT glazing typically results in lower energy efficiency in a building. If sustainability and environmental consideration are priorities, lower energy consumption by a building may be more desirable than its transparency. This means that lower VLT values may be more desirable.

Through a study of applicable codes, glazing options, and calculations, this report addressed the apparent conflict between the MAR VLT requirement and the LEED energy efficiency requirements. The study shows that the Symphony Honolulu building could have been designed to comply with both requirements, but at the cost of lower energy efficiency. A lower VLT value generally relates

to higher efficiency, more privacy for residents, and does not restrict low external reflectance. A high VLT does not necessarily relate to a low external reflectance.

If sustainability is a priority, lowering energy consumption to gain transparency of the glazing may not be desirable. Current glazing technology is very advanced, offering dynamic glazing that adjusts depending the level of sunlight present in the environment. Given these considerations, we recommend that the HCDA consider revising the VLT requirement in the MAR and addressing the reflectance issue directly.

II. Introduction

The primary concern addressed in this report is whether the Visible Light Transmittance (VLT) requirement of the Mauka Area Rules (MAR) in combination with the energy efficiency requirements of Leadership in Energy and Environmental Design (LEED) criteria, creates an unnecessarily difficult set of design constraints that have no real purpose. This report summarizes and presents a study of the MAR and other rules and codes governing the Mauka Area of the Kakaako Community Development District (KCDD) and analyzes the effects VLT on the energy efficiency of a building.

The Symphony Honolulu project ("Project") has been analyzed to determine if there is a conflict between the VLT and LEED requirements of the MAR. The Project is a residential high-rise project located on the corner of Kapiolani Boulevard and Ward Avenue. The Project is under the jurisdiction of the Hawaii Community Development Authority (HCDA) and the design of the Project must comply with all applicable provisions of the MAR, except where variances are approved.

The Project incorporates a window-wall design, which creates the look of an all glass building exterior. With this design, glass performance becomes a key factor in the overall building energy performance. Although the proposed glass selection for this building design does allow the building to meet the LEED energy efficiency goals, it does not comply with the VLT requirements of the MAR. The lower VLT glazing product increases efficiency by allowing less light to be transmitted through the glass. In other words, lower VLT means less light is transmitted through the glass, potentially increasing energy efficiency. Likewise, higher VLT means more light is transmitted through the glass, potentially decreasing energy efficiency.

The MAR, contained in the Hawaii Administrative Rules (HAR) §15-217, has specific glazing requirements. Section 15-217-55 (k)(2) states that "[w]indow glazing shall be transparent with clear or limited UV tint so as to provide views out of and into the building." Discussion with HCDA planning staff indicates that an additional intent of the VLT requirement was to minimize external reflection on outdoor public spaces, streets, and neighboring buildings in the district and also to minimize heat island effects.

III. Applicable Code Requirements

This section provides a description of the applicable codes and ordinances and the minimum requirements the Project must meet. The MAR provide planning, zoning, and design criteria for the Mauka area of the KCDD. MAR section 3(e) states that "[e]xcept as otherwise specifically stated in this chapter, all other rules, laws, and ordinances shall continue to remain applicable to the developments and properties within the Mauka area." The intent was that relevant provisions of the Revised Ordinances of Honolulu (ROH) also apply to projects within the KCDD, except where specifically exempted or superseded by the MAR.

The MAR has glazing requirements, including Visible Light Transmittance (VLT) minimums and LEED minimums for new construction. The three applicable requirements of the MAR are listed in three sections. MAR section 55(k)(2) states, "[VLT] level of windows on the ground floor shall be seventy per cent or greater and on all other floors the [VLT] level shall be fifty per cent or greater." MAR section 59(c)(1) states, "[A] project shall qualify for the applicable base LEED rating system at the appropriate certification level (e.g., new construction shall qualify for LEED for new construction." MAR section 55(m)(4) states, "At least seventy per cent of a retail thoroughfare front element shall be transparent glazing, with at least seventy per cent of the glazing to allow views into the store rather than being shallow window box displays."

Chapter 32 of the ROH states that all residential and commercial buildings must comply with the International Energy Conservation Code (IECC) as amended. The ROH and IECC classify this building as commercial (IECC Ch.2 and ROH Section 16.1.1(21)); therefore, the Project must comply with the IECC commercial requirements.

Chapter 5 of the IECC provides two compliance paths for energy consumption of commercial buildings. Based on IECC section 501.1, the designer can choose between the requirements of American Society of Heating, Refrigeration, and Air-Conditioning Engineers (ASHRAE) 90.1 or IECC Chapter 5. LEED baseline requirements are not fulfilled by the use of IECC chapter 5; therefore, the designer must comply with ASHRAE 90.1.

ASHRAE 90.1 describes the minimum requirement for energy efficiency in a new building. The methodology for determining baseline building energy usage is described in sections 5 through 9. Because this building has an all glass exterior, the following are the applicable fenestration requirements for determining baseline energy use:

1. Maximum U-value of 1.2
2. Maximum Solar Heat Gain Coefficient (SHGC) of 0.25
3. Maximum Glass Area of 40%

These requirements are not mandatory design criteria for the building; they are prescriptive provisions to determine baseline energy use. The designer is free to use any materials to design the building as long as the design exceeds the baseline building model energy efficiency determined by the prescriptive provisions. ASHRAE 90.1 Section 11 describes an alternate method to the prescriptive provisions that "may be employed for evaluating the compliance of all proposed designs except designs with no mechanical system" (ASHRAE 90.1 11.1.1). A building simulation program must be used to perform an energy usage calculation to show that the proposed building performs better than or equal to the baseline building design.

The LEED requirement pertaining to the energy efficiency of this building is Energy & Atmosphere (EA) Prerequisite 2, Option 1, which states, "Demonstrate a 10% improvement in the proposed building performance rating . . . compared with the baseline building performance rating." The designer must "[c]alculate the baseline building performance rating according to the building performance rating method in Appendix G of [ASHRAE] Standard 90.1-2007 . . . using a computer simulation model for the whole building project." Simply put, the proposed building design needs energy performance that is 10% better than the baseline building performance.

Table1: Code and Ordinance Requirements				
Requirement	VLT	U-factor	SHGC	Minimum Energy Savings
ROH	n/a	1.2 max OR <u>Comply with ASHRAE</u>	0.40 max OR <u>Comply with ASHRAE</u>	n/a
MAR	**50% min[1] / 70% min[2]**	n/a	n/a	Comply with LEED
LEED	n/a	Comply with ASHRAE	Comply with ASHRAE	**10% over baseline[3]**
ASHRAE	n/a	1.2 max OR **<u>Perform Calculation</u>**	0.25 max OR **<u>Perform Calculation</u>**	**Provides baseline details**
IECC	n/a	Superseded by ROH	Superseded by ROH	n/a

Bold is the limiting factor. Where options are presented, underlined is the chosen option.

[1] Upper floors

[2] Ground floor

[3] Energy savings is calculated per the following formula:

$$Percentage\ improvement = 100\ x \frac{(Baseline\ building\ performance - Proposed\ building\ performance)}{Baseline\ building\ performance}$$

Petition for Waiver and Suspension of §15-217-55(k)(2) of the Mauka Area Rules

Staff Report
July 22, 2015

Background: On May 28, 2015, OliverMcMillan Pacific Rim, LLC ("OMPR") filed a Petition for waiver and suspension of Hawaii Administrative Rules ("HAR") §15-217-55(k)(2) ("Glass Rule") and to amend Development Permit No. KAK 12-075 ("Petition"). In the Petition, OMPR requested the Hawaii Community Development Authority ("HCDA" or the "Authority") to: (1) waive or permanently suspend the Glass Rule as it applies to the Symphony Honolulu Project ("Project") associated with Development Permit No. KAK 12-075 ("Development Permit"), that such waiver or permanent suspension be retroactive from April 5, 2015 and (2) suspend the Glass Rule for the Kakaako Community Development District ("KCDD") in general pending further review, analysis, and research prior to consideration of an appropriate modification and/or amendment to remove the conflict and negative impacts of the current Glass Rule on other Mauka Area Rules.

On June 6, 2012, the Authority approved the Development Permit. The property subject to the Development Permit is located within the Mauka Area of the KCDD. The Development Permit was obtained under HAR Chapter 15-217, Mauka Area Rules of the KCDD ("Mauka Area Rules"). The Glass Rule is a provision under Subchapter 4 (Area-Wide Standards) of the Mauka Area Rules and reads as follows:

> "Window glazing shall be transparent with clear or limited UV tint so as to provide views out of and into the building. Visible light transmission level of windows on the ground floor shall be seventy per cent or greater and on all other floors the visible light transmission level shall be fifty per cent or greater;"

Visual light transmittance ("VLT") was the characteristic intended to be measured in the Glass Rule. The Development Permit was approved with the condition that OMPR would "comply with all applicable requirements of Subchapter 4 (Area-Wide Standards) of the Mauka Area Rules." Exterior glass for the Project was not specified as a part of the Development Permit submittal. The level of design completeness for the Project at the time of the Development Permit approval was consistent with the typical submittal standards for a development permit submitted in compliance with the Mauka Area Rules. The Authority approved the Development Permit with the condition that OMPR shall comply with the Glass Rule and all applicable Subchapter 4 provisions.

EXHIBIT 7

The City and County of Honolulu ("City") required that the Project obtain a Building Permit. The City requests that the HCDA review and acceptance of the drawings associated with the Building Permit prior to its approval. Although the Building Permit is not a HCDA permit, HCDA staff reviews Building Permit drawings for consistency with the Mauka Area Rules and the HCDA approved the Development Permit. The City provides the option to divide up the Building Permit approval process into several different stages to offer timely approvals and to help avoid project delays. Prior to the final Building Permit, developers can apply for a Foundation Permit and a Superstructure Permit for a development project. The developer applies for these additional permits and can build portion of the Project under those permits at its own risk, since the entire Project is not approved under a Building Permit. OMPR opted to divide up the Project Building Permit and applied for and received both Foundation and Superstructure Permits. OMPR submitted the Project Building Permit drawings for HCDA staff review in January 2015. Specifications for the Project's exterior glazing was not provided as a part of the Building Permit drawing set. As a part of the Project Building Permit review process, on January 29, 2015 HCDA staff requested via email that OMPR provide the Project glass specifications relevant to the Mauka Area Rules. On February 4, 2015, OMPR responded with an email stating that the Project did not comply with the Glass Rule stating, "Symphony tower glass VRE 1-30 is 28% VLT and does not meet the 50% VLT required in this rule."

On February 23, 2015, HCDA staff issued a Notice of Violation ("NOV") to OMPR pursuant to HAR §15-219-99 for violating the Glass Rule. In the NOV, HCDA staff requested that, "any and all non-conforming windows which have been installed be removed by no later than March 25, 2015, and that the developer refrain from any further use of the non-conforming windows."

On March 3, 2015, OMPR responded acknowledging receipt of the NOV and indicated that (1) OMPR will be seeking "a waiver or suspension of the minimum VLT requirement for windows above ground level in the Project" and (2) "OMPR does not intend to remove any of the so-called 'non-conforming windows' pending the final determination on its Petition for waiver or suspension of the administrative rule provisions in §15-217-55(k)(2)", and (3) OMPR requested confirmation of the "cut-off date for submission of its Petition." OMPR also notified the HCDA that the NOV is "without prejudice to OMPR's right under §15-219-99(e) to file an appeal of the NOV letter to the Authority in accordance with §15-219-34 within thirty (30) days of OMPR's receipt of the NOV letter." In the letter dated March 3, 2015, OMPR highlights a so-called inconsistency within the Mauka Area Rules. It claims that the "VLT requirement is inconsistent with and conflicts with and/or severely constrains the design alternatives available to meet or achieve other requirements of the Mauka Area Rules, including without limitation, LEED standard energy efficiencies".

On March 5, 2015, HCDA staff issued a revised Notice of Violation ("Revised NOV") extending the date to resolve the violation to April 5, 2015. The Revised NOV included

additional language stating, "Pursuant to §15-219-99(e), you may appeal to the Authority within thirty (30) days of your receipt of this notice of violation. An appeal to the Authority shall not stay any notice or any fines imposed thereby."

On March 9, 2015, HCDA staff responded to OMPR's letter dated March 3, 2015 acknowledging and responding to the three points in their letter. On March 23, 2015, OMPR's counsel, McCorriston Miller Mukai MacKinnon LLP ("Petitioner's Counsel"), requested that the HCDA's Executive Director, begin the process to waive and/or suspend the Glass Rule.

On March 30, 2015, HCDA staff sent a letter to the Petitioner's Counsel acknowledging receipt of their March 23, 2015 letter and requesting that OMPR submit a petition. On April 1, 2015, OMPR responded to HCDA staff's March 5, 2015 Revised NOV stating their intention to file a petition and not to remove the non-conforming windows.

On April 9, 2015, the Petitioner's Counsel submitted an (1) "Appeal of the Executive Director's Notice of Violation Letter to Appellant, Dated March 5, 2015 and Received March 10, 2015", (2) "Motion for Modification of the Compliance Date of Notice of Violation, or in the Alternative to Stay Enforcement, Pending Consideration of any Request by OliverMcMillan Pacific Rim, LLC for Waiver and Suspension of §15-217-55(k)(2) of the Mauka Area Rules", and (3) a letter request for administrative review and other relief relating to HAR §15-217-55(k)(2) of the Kakaako Mauka Area Rules.

On April 14, 2015, OMPR submitted a "Motion to Stay Appeal Proceedings Pending Consideration of any Request by OliverMcMillan Pacific Rim, LLC for Waiver and Suspension of §15-217-55(k)(2) of the Mauka Area Rules."

On May 6, 2015, the Authority held a public hearing and approved an order "Granting OliverMcMillan Pacific Rim, LLC's Motions to Stay Appeal Proceedings Pending Consideration of any Request by OliverMcMillan Pacific Rim, LLC for Waiver and Suspension of §15-217-55(k)(2) of the Mauka Area Rules; and to Stay Enforcement, Pending Consideration of any Request by OliverMcMillan Pacific Rim, LLC for Waiver and Suspension of §15-217-55(k)(2) of the Mauka Area Rules."

At its May 27, 2014 public meeting, the Authority voted to deny OMPR's "Request for Administrative Relief for the Symphony Honolulu Project Relating to Hawaii Administrative Rule §15-217-55(k)(2)" since there is no provision in the Rules of Practice and Procedure for the Authority to administratively waive or suspend community development district rules.

On May 28, 2015, OMPR submitted its Petition for waiver and suspension of §15-217-55(k)(2) of the Mauka Area Rules. In a letter dated June 17, 2015, the Petitioner's Counsel clarified that it is requesting two separate action in its Petition that separate

procedural process would be applicable to each of the two requested actions under the Petition.

On June 20, 2015, a Notice of Public Hearing for considering the Petition was published in the Honolulu Star-Advertiser.

The President of the Senate and Speaker of the House of Representatives were notified upon the posting of the hearing notice. Associations of apartment owners of residential buildings in the KCDD adjacent to the Project, surrounding landowners and businesses, the Ala Moana/Kakaako Neighborhood Board, and the Kakaako Improvement Association were notified of the public hearings. Various elected officials and State and County agencies were also notified of the public hearings. Hearing notice was also provided to approximately 402 individuals and organizations that have shown interest in development activities in the KCDD.

As set forth in the Notice of Public Hearings, the deadline to intervene was July 10, 2015. No motion for intervention was filed.

On July 15, 2015, a pre-hearing conference was held at HCDA's office at 547 Queen Street, Honolulu, Hawaii 96813, and a Pre-Hearing Order was issued, requiring the submission of witness lists, exhibits lists, and exhibits by no later than July 20, 2015.

Discussion: OMPR has made the claim that the VLT requirement [§15-217-55(k)(2)] and the Leadership in Energy and Environmental Design ("LEED") requirement (§15-217-59) of the Mauka Area Rules cannot be met simultaneously, therefore, there is an inherent conflict in the Mauka Area Rules. To assess the OMPR's claim, staff needed to engage a mechanical engineering consultant to review the Mauka Area Rules as well as other pertinent energy and LEED rules. Following a Hawaii Revised Statutes, Section 104D-304, Professional Services procurement process, staff retained Douglas Engineering Pacific, Inc. ("Consultant") to review all pertinent rules and prepare building energy model simulation to evaluate the alleged conflict in the Mauka Area Rules. The Consultant is an electrical and mechanical consultant with expertise in LEED. The Consultant has reviewed all pertinent rules and prepared several building energy model simulation, including simulation for the Project with the glazing that is used in the Project that does not meet Mauka Area Rules requirements as well as glazing that meets the Mauka Area Rules requirements. The Consultant's report is provided as Exhibit A.

The Consultant's report indicates that there is no conflict between the VLT and LEED requirements of the Mauka Area Rules and any building, including an all glass high-rise tower, could be designed to meet both the VLT and LEED requirements. The report also provides a list of glazing products that can be utilized that meet the VLT and LEED requirements. Since there are several glazing products that can meet the VLT and LEED requirements, the VLT rule is not excessively restrictive either.

However, the Consultant provides some insight into the efficacy of regulating VLT. As provided in §15-217-55(k)(2) of the Mauka Area Rules, the intent of regulating VLT is to provide views out of and into the building. In a residential building, a high VLT glazing may cause privacy issues. A high VLT glazing is inherently less energy efficient, therefore, if sustainability and environmental consideration are a priority, lower energy consumption by a building may be more desirable than its transparency. Another objective of high VLT glazing requirement in the Mauka Area Rules was to minimize external reflectance and heat island effect in the surrounding environment. The Consultant's report indicates that high VLT glazing does not necessarily mean lower external reflectance. Glazing products researched by the Consultant indicate that there are several high VLT glazing that have high external reflectance. Also, there are low VLT glazing that have low external reflectance. For these various reasons, the Consultant recommends considering revising the VLT requirement in the Mauka Area Rules.

Attachment: Exhibit A - Douglas Engineering Pacific, Inc. Report

BEFORE THE HAWAII COMMUNITY
DEVELOPMENT AUTHORITY

In the Petition of	)	DOCKET NO. CCED KAK 2015-2
	)	
OLIVERMcMILLAN PACIFIC RIM, LLC,	)	AFFIDAVIT OF JON WEIR
	)	
for waiver and suspension of § 15-217-55(k)(2) of the Mauka Area Rules as applied to the Symphony Honolulu Project.	)	

AFFIDAVIT OF JON WEIR

STATE OF CALIFORNIA)
) ss.
COUNTY OF LOS ANGELES)

JON WEIR, being first duly sworn on oath, deposes and says:

1. I have a Bachelor of Science degree in Architectural Technology and am the Principal of JA Weir Associates.

2. Prior to forming JA Weir Associates ("JA Weir"), I worked as a project manager for a national (later international) curtain wall design, and installation firm followed by consulting firms in Chicago, Dallas, Hong Kong, and Los Angeles.

3. JA Weir provides traditional and design consulting, as well as due diligence and forensic review.

4. Unless otherwise indicated, all statements herein are based upon my personal knowledge.

5. I make this declaration in support of OliverMcMillan Pacific Rim, LLC's ("OMPR") Petition for Waiver and Suspension of § 15-217-55(k)(2) of the Mauka Area Rules as applied to the Symphony Honolulu Project ("Petition").

EXHIBIT "A"

EXHIBIT 8

6. Visible Light Transmittance ("VLT") is best defined as the amount of light that passes through a pane of glass, with higher VLT translating to greater light pass-through.

7. The Solar Heat Gain Coefficient ("SHGC") is a measurement of the amount of heat generated by the light (visible or infrared) that has passed through the glass (long wave conduction of heat due to glass absorption is not included in this measurement).

8. Higher VLT equates to worse SHGC, which results in more heat buildup inside the building.

9. The more heat that enters the building, the more energy it takes to cool it. This is especially problematic in sunny, hot climates such as Honolulu.

10. Chapter 15-217 of the Hawaii Administrative Rules (dated September 14, 2011) discusses the "visible light transmission level" and mandates a minimum level of 50% for the tower of a building and 70% for the ground floor.

11. The phrase "visible light transmission level" is confusing because it does not have a definition in the commercial glazing industry as "transmission" is an action and glass does not "transmit" anything.

12. Assuming that this is a misnomer and that transmittance (the property of glass that allows light through) was meant to be used, section 15-217-55(k)(2) of Mauka Area Rules requires that all glass in a new tower façade have a VLT of 50% or greater ("Glass Rule").

13. After searching through a database of just about every coated piece of glass manufactured in the world with a VLT of 50% or greater, the best performing product on the market today has a corresponding SHGC of 0.22. This roughly translates into 22% of the solar radiation on the façade converting to heat inside the building that must now be neutralized by a cooling system.

14. Conversely, the glass OMPR is currently installing in the Symphony Honolulu Project provides an SHGC of 0.19–three percentage points below the 0.22 value, representing substantial energy savings (approximately 16%).

15. The Symphony Honolulu Project's SHGC of 0.19 was also required to meet the energy model necessary for Code compliance.

16. Among the major suppliers of glass my co-associates and I have researched throughout the world, we can find no high performance glass that can meet both the Symphony Honolulu Project's necessary SHGC and the 50% VLT requirement. This includes, but is not limited to, thousands of glass types as manufactured by Asahi, Cardinal, China Southern, Interpane, Guardian, NSG, Pilkington, PPG, Shanghai Pilkington, Saint Gobain, and Viracon.

17. In fact, JA Weir found only five comparable products with a VLT of 50% or greater, none of which came close to the Symphony Honolulu Project's 16% required energy savings performance.

18. The absence of an available product identifies a fundamental flaw in the Glass Rule as it stands today.

19. JA Weir believes that the Glass Rule, as it stands, is an incorrect approach to solving one perceived issue while forcing building design to become less energy efficient.

20. Hawai'i is not alone in its attempt to accommodate tenant comfort and limit energy consumption in this manner. California has a provision in Title 24 of its Code that limits U Value, Relative SHGC and VT, or visible light transmittance, which is defined as the rating for overall daylight transmittance of a product, including the frame.

21. California's Title 24 provision reflects an understanding that VLT (or VT) cannot be regulated alone, but only as a part of three interrelated factors affecting the performance of exterior wall systems.

22. JA Weir is unaware of any other municipalities in the United States that regulate glass selection solely by VLT.

23. It is also important to emphasize that VLT is not a performance attribute of glass but an optical one. It is the indicator of how much light travels through the glass.

24. Rather, the SHGC is the performance indicator. It defines how the solar radiation traveling through the glass is controlled.

25. For high sunlight areas, such as the Mauka District of Honolulu, the SHGC needs to be low to control energy consumption and allow tenant comfort.

26. While every project is different, aiming for a low SHGC, as the Symphony Honolulu Project did, would save both energy and assist in reducing the overall energy consumption for cooling for the residents.

27. JA Weir surveyed the projects currently under construction in the various Honolulu districts, none of which use glass with a 50% VLT or greater. All of the glass products in use in commercial developments today provide a much lower VLT percentage due to the emphasis on performance (*e.g.*, SHGC) in the design.

28. Further, a reduction in VLT from 50% to 30% does not noticeably alter one's ability to see through the glass.

29. Considering the above and the current status of the Glass Rule, JA Weir believes that the HCDA should grant OMPR's Petition.

FURTHER AFFIANT SAYETH NAUGHT.

DATED: Redondo Beach, California, July 16th, 2015.

JON WEIR (Jon Allen Weir)

This 5 page *Affidavit of Jon Weir* was subscribed and sworn to before me this 16th day of July, 2015.

Signature: Yong B. Yook

Name: Yong Bok Yook

Notary Public, State of California

YONG BOK YOOK
Commission # 2012576
Notary Public - California
Los Angeles County
My Comm. Expires Mar 22, 2017

My Commission expires: Mar 22, 2017

Calvert G. Chipchase
Direct Line: (808) 521-9220
Direct Fax: (808) 540-5021
E-mail: cchipchase@cades.com

April 2, 2015

BY HAND DELIVERY

Director Anthony Ching
Hawai'i Community Development Authority
547 Queen Street
Honolulu, Hawai'i 96813

RECEIVED
2015 APR 2 PM 4 43
HAWAII COMMUNITY DEVELOPMENT AUTHORITY

Re: Development Permit No. KAK 12-109; Petition for Waiver of Hawai'i Administrative Rule § 15-217-55(k)(2)

Dear Director Ching:

I represent Downtown Capital LLC in connection with Development Permit No. KAK 12-109 (the "Permit"). The Hawai'i Community Development Authority ("HCDA") approved the Permit on December 5, 2012. Following approval of the Permit, Downtown Capital received the project's grading, foundation, superstructure and building permits, all of which were reviewed and approved by HCDA before they were issued.

In accordance with the Permit and the subsequent approvals, Downtown Capital constructed the project on Tax Map Key No. (1) 2-1-047-003 (the "**Property**"). Downtown Capital completed construction on March 20, 2015. Buyers for the project will begin preclosing on April 11, 2015.

Even though the project has been constructed as authorized by the building permit and other approvals, HCDA has requested confirmation that the windows installed on the project conform to Hawai'i Administrative Rule ("HAR") § 15-217-55(k)(2). Section 15-217-55(k)(2) provides in relevant part as follows:

k) Windows:

. . . .

C S

EXHIBIT 9

(2) Visible light transmission level of windows on the ground floor shall be seventy per cent or greater and on all other floors the visible light transmission level shall be fifty percent or greater . . . .

In response to HCDA's inquiry, on March 23, 2015, Downtown Capital confirmed that the windows conform to section 15-217-55(k)(2) and provided the calculations of "visible light transmission" of the "windows" prepared by Downtown Capital's consultant. In conjunction with the submission of this information, Downtown Capital requested approval of a minor change to its development permit application to state the satisfaction of section 15-217-55(k)(2) in the application. To date, HCDA has not acted on Downtown Capital's request.

Time is of the essence. The project has been completed. More than 600 buyers are preparing to sign loan documents and deposit funds to close on their units. We need to resolve the question with respect to the windows so that HCDA will approve the certificate of occupancy for the project.

If HCDA has concluded that the windows installed on the project are inconsistent with section 15-217-55(k)(2), Downtown Capital petitions for a waiver of the rule pursuant to HAR § 15-15-219-98(b). Section 15-15-219-98(b) authorizes the authority to waive any of the provisions of HCDA's administrative rules. As part of this petition, Downtown Capital provides the following information:

(1) The name, address, and telephone number of the petitioner and the petitioner's legal counsel, if any, which shall be updated by the petition at all times;

Downtown Capital's contact information is as follows:

215 North King Street, Suite 1000
Honolulu, Hawai'i 96817
Tel: (808) 203-6980

I am Downtown Capital's counsel.

(2) The specific provision of the administrative rules of HCDA's community development districts for which petitioner seeks a waiver;

Downtown Capital seeks a partial waiver the "visible light transmission" standard for "windows" expressed in 15-217-55(k)(2) as set forth herein.

(3) The effect of the strict application of the provision for which petitioner seeks a waiver;

Interpreting section 15-217-55(k)(2) to create a "visible light transmission" standard of 50% for "window glazing" would impose a substantial and undue hardship on Downtown Capital.

(4) The reasons why the petitioner seeks to avoid the strict application of the provision for which petitioner seeks a waiver;

The windows that were installed on the project are the windows that HCDA approved for the project. Those windows are consistent with a visible light transmission standard of 50%. To the extent HCDA concludes otherwise, the strict application of section 15-217-55(k)(2) would impose a substantial and undue hardship on Downtown Capital.

(5) An alternate plan or other means by which the spirit and intent of the provision for which petitioner seeks a waiver can be accomplished other than the strict application of the provision;

The window glazing for the approved and installed windows has a visible light transmittance level of 35%. There is a negligible difference between a visible light transmittance standard of 35% for window glazing and a visible light transmittance standard of 50% for window glazing. The project has operable windows and lanai doors. When opened, the total visible light transmission for the window is 50%. Accordingly, the spirit and intent of section 15-217-55(k)(2) would be met by granting the waiver.

(6) The extent to which such waiver is in the best interest of the subject community development district; and

For the reasons described above, the requested waiver is in the best interest of Kaka'ako, including the 600 buyers who are preparing to close on their units.

(7) The extent to which such waiver may endanger the health, safety, or welfare of the subject community development district.

The waiver would pose no danger to the health, safety or welfare of any person in Kaka'ako.

Please contact me if you have questions.

Very truly yours,



Calvert G. Chipchase
for
CADES SCHUTTE
A Limited Liability Law Partnership

CADES SCHUTTE
A Limited Liability Law Partnership

CALVERT G. CHIPCHASE 7757-0
CHRISTOPHER T. GOODIN 8562-0
1000 Bishop Street, Suite 1200
Honolulu, Hawai'i 96813-4212
Telephone: (808) 521-9220
Facsimile: (808) 540-5021
Email: cchipchase@cades.com
cgoodin@cades.com

Attorneys for Petitioner
DOWNTOWN CAPITAL LLC

BEFORE THE HAWAII COMMUNITY DEVELOPMENT AUTHORITY

STATE OF HAWAI'I

In re Downtown Capital LLC's Petition Appealing August 19, 2015 Notice of Violation for the Project under Development Permit No. KAK 12-109 for 801 South Street (State Tax Map Key No. (1) 2-1-047-003) Issued by Hawaii Community Development Authority on December 5, 2012	DEVELOPMENT PERMIT NO. KAK 12-109 **DOWNTOWN CAPITAL LLC'S PETITION APPEALING THE AUGUST 19, 2015 NOTICE OF VIOLATION** **DECLARATION OF RYAN HARADA** **DECLARATION OF VITO GALATI** **DECLARATION OF MARSHALL HUNG** **DECLARATION OF COLBERT MATSUMOTO** **EXHIBITS 1-17**

RECEIVED
2015 SEP 18 PM 4 27
HAWAII COMMUNITY
DEVELOPMENT
AUTHORITY

EXHIBIT 10

BEFORE THE HAWAII COMMUNITY DEVELOPMENT AUTHORITY

STATE OF HAWAI'I

In re Downtown Capital LLC's Petition Appealing August 19, 2015 Notice of Violation for the Project under Development Permit No. KAK 12-109 for 801 South Street (State Tax Map Key No. (1) 2-1-047-003) Issued by Hawaii Community Development Authority on December 5, 2012	DEVELOPMENT PERMIT NO. KAK 12-109 **DECLARATION OF RYAN HARADA**

DECLARATION OF RYAN HARADA

I, RYAN HARADA, declare of my own personal knowledge as follows:

1. Through Workforce Kakaako LLC, I am a principal of Downtown Capital, LLC ("**Downtown Capital**").

2. Downtown Capital is the owner and developer of the residential workforce housing project at 801 South Street (the "**Project**").

3. Hawai'i Community Development Authority ("**HCDA**") approved the Development Permit for the Project in 2012. The Project is a workforce housing project with 635 residential units. In the course of building the Project, Downtown Capital received grading, foundation and building permits from the City and County of Honolulu. HCDA reviewed and approved each permit before it was issued. After those permits were issued, the Project's windows were installed in accordance with the permits.

EXHIBIT 11

4. The Project is not a curtain-wall building with glass covering the entire face of the exterior. Sixty-seven percent of the exterior is concrete and similar solid surfaces. Twenty percent of the surface comprises lanai doors, all of which are set back four feet from the building face with a roof overhang. The remaining 13 percent of the exterior is glass windows. All of the windows and doors may be opened and closed. Downtown Capital has not received any complaint about the windows from any member of the public. The visual light transmittance ("**VLT**") for the glazing used in the windows located above the first floor of the Project is 35 percent. Neither Downtown Capital nor its consultants identified the VLT standard in HAR § 15-217-55(k)(2) when the Project was designed and built. HCDA did not ask Downtown Capital about the VLT of the glazing installed on the Project.

5. HCDA first raised the VLT standard after the windows had been installed. Specifically, HCDA first raised the standard at a meeting on January 30, 2015. The meeting was attended by me, HCDA Director of Planning and Development Deepak Neupane and representatives of Project's construction company, Hawaiian Dredging Construction Company, Inc. ("**HDCC**"). During the meeting, Mr. Neupane mentioned the VLT standard and asked whether the Project complied. HDCC representatives explained that they believed the Project complied with the VLT standard.

6. On March 20, 2015, HDCC representatives and I met with HCDA Executive Director Anthony J.H. Ching and Mr. Neupane to discuss the VLT

standard. HDCC representatives explained that the Project complied with the VLT standard.

7. By letter dated March 23, 2015 to the Executive Director, Downtown Capital confirmed that the windows conform to the VLT standard and provided the VLT calculations for the windows prepared by HDCC. In conjunction with the submission of this information, Downtown Capital requested approval of a minor change to its development permit application to state the satisfaction of the VLT standard in the application.

8. On March 30, 2015, the Executive Director informed Downtown Capital that the March 23 letter was inadequate and instructed Downtown Capital to submit a petition for wavier of the VLT standard as it applied to the Project.

9. On April 2, 2015, Downtown Capital's representatives Vito Galati, Marshall Hung, Colbert Matsumoto and I met with the Executive Director. The Executive Director explained that he did not find the VLT calculations in the March 23 letter compelling. Accordingly, the Director confirmed that Downtown Capital would need to file a petition for waiver or suspension of the VLT standard.

10. After receiving the Director's instruction on March 30, Downtown Capital understood that a petition for waiver might be necessary. Accordingly, Downtown Capital prepared a petition and, during the April 2 meeting, presented the petition to the Executive Director.

11. On April 8, 2015, HCDA conducted a walk-through inspection of the Project. The Executive Director and Mr. Neupane attended the inspection for

HCDA. HCDA conducted this inspection so that it could approve the certificate of occupancy that was to be issued by the City. The City would not issue the certificate unless HCDA approved its issuance. On April 9, 2015, the Executive Director called Mr. Hung. During the call, the Executive Director advised Mr. Hung that he had called City Planning Director George Atta and approved the issuance of the certificate of occupancy. On April 10, 2015, the City issued a temporary certificate of occupancy for the Project. The certificate of occupancy was temporary because a small improvement to the driveway remained to be completed.

12. A few weeks later, the Executive Director called Downtown Capital to request a meeting. Messrs. Galati, Hung and Matsumoto and I met with the Executive Director. The Executive Director explained that a waiver or suspension petition would not be necessary. According to the Executive Director, the matter could be handled administratively because the petition in the proceedings for *In re Petition of OliverMcMillan Pacific Rim, LLC*, Docket No. CCED KAK 2015-2 ("***OMPR***"), requested that the VLT standard be waived for the entire district. Because the Project was located within the same district as the OMPR project, the district-wide waiver would apply to Downtown Capital's Project. Accordingly, the Executive Director returned Downtown Capital's waiver petition dated April 2, 2015.

13. On May 22, 2015, the Executive Director called Downtown Capital to request a meeting. Mr. Galati and I attended a meeting the same day. At the

meeting, the Executive Director stated that he had been advised by HCDA's counsel that the VLT issue could not be waived district-wide and, therefore, Downtown Capital would need to submit a waiver petition. Downtown Capital disagreed with that analysis and asked that the matter be discussed at a later date when Messrs. Matsumoto and Hung were available. The Executive Director agreed.

14. On June 5, 2015, Messrs. Galati and Hung and I met with the Executive Director to discuss filing another waiver petition for the Project. Because Mr. Matsumoto was unavailable, the Executive Director agreed to continue the meeting to another day.

15. On June 19, 2015, Messrs. Galati, Hung and Matsumoto and I met with the Executive Director. The Executive Director reiterated that the VLT issue could not be waived district-wide in the *OMPR* proceeding and that Downtown Capital needed to file a waiver petition. The Director further explained that HCDA had retained a consultant in the *OMPR* proceeding to evaluate the VLT standard and that the consultant was likely to find that the VLT standard was ineffective and inconsistent with its objectives. He explained that the consultant and HCDA staff would recommend suspending, revising or repealing the VLT standard. Downtown Capital's representatives suggested that if the standard were to be repealed, a petition for waiver would not be necessary. The Director answered that a waiver would be necessary until the standard had been revised or repealed and that if a waiver was not sought, he would issue a NOV.

16. During the discussion, the Executive Director proposed that he would not issue an NOV to Downtown Capital if a waiver petition were filed by August 5, 2015. The August 5 deadline was proposed because that was the date on which the *OMPR* proceeding was set for decision-making. By that point, HCDA and Downtown Capital would have the benefit of the record, expert opinion and decision in the *OMPR* proceeding. Downtown Capital accepted the Executive Director's proposal and agreed to submit a waiver petition by August 5. The Executive Director explained that he would advise Mr. Neupane of the agreement.

17. On July 22, 2015, Mr. Galati, Downtown Capital's counsel and I attended a hearing in the *OMPR* proceeding. Before the hearing, Mr. Neupane asked me and Mr. Galati about the status of the waiver petition. I responded that the petition would be submitted by August 5, as the Executive Director had agreed. Mr. Neupane replied that, if the petition were not submitted by August 5, he would not be able to hold off an NOV. After the hearing, I followed up with Mr. Neupane by telephone to confirm the agreement that the NOV would not issue if the waiver petition were filed by August 5. Mr. Neupane confirmed the agreement.

18. On July 27, 2015, Mr. Neupane called me. During the call, Mr. Neupane confirmed the August 5, 2015 deadline to submit the waiver petition.

19. On August 5, 2015, Mr. Galati, Downtown Capital's counsel and I attended the decision-making hearing in the *OMPR* proceeding. During the hearing, HCDA continued the matter to August 12, 2015. After the hearing concluded, Mr. Neupane approached me, Mr. Galati and Downtown Capital's

counsel in the hearing room. Mr. Neupane asked whether Downtown Capital intended to submit a petition by the end of the day. Counsel responded that while a petition was ready to be filed, it might be better to delay the filing until August 12 to coincide with the conclusion of the *OMPR* proceedings. Mr. Neupane acknowledged that HCDA had wanted to conclude the *OMPR* proceedings before beginning a new waiver proceeding. Nevertheless, Mr. Neupane stated that the agreement was that an NOV would not issue if a waiver petition were filed by August 5. Consequently, Mr. Neupane explained that if a petition were filed by August 5, no NOV would issue. But if a waiver petition were not filed on August 5, he could not guarantee that a NOV would not issue.

20. Later that day on August 5, Downtown Capital filed the Waiver Petition in accordance with the agreement with HCDA.

21. On August 19, 2015, Mr. Neupane called me to advise that an NOV would be issued for the Project for violation of the VLT standard. I responded, "that wasn't the deal, as we submitted our petition by August 5." Mr. Neupane acknowledged the agreement, but said that his hands were tied.

22. Downtown Capital Downtown Capital reasonably relied on the Executive Director's representation that an NOV would not issue if a waiver petition were filed by August 5, when Downtown Capital expended funds to prepare the Waiver Petition, filed the Waiver Petition on August 5 and provided information regarding the VLT of the glazing on the Project.

23. The Project has been completed and all of the windows have been installed. The sales of the units in the Project have closed. Owners and residents have begun moving into the units. To replace the windows and lanai doors with glass meeting the VLT standard would be cost prohibitive, disrupt 635 units and achieve no public benefit.

24. Attached hereto as Exhibit 1 is a true and correct copy of a letter dated March 23, 2015, from Downtown Capital to Anthony Ching.

25. Attached hereto as Exhibit 2 is a true and correct copy of the Hawaii Highrise - Glazing Performance Data dated March 12, 2015, filed with HCDA on April 9, 2015, by Petitioner in the *OMPR* case.

26. Attached hereto as Exhibit 3 is a true and correct copy of an excerpt of the transcript of proceedings on July 22, 2015, in the *OMPR* case. Certain pages have been annotated to state the name of the person testifying.

27. Attached hereto as Exhibit 4 is a true and correct copy of an excerpt of the building permit for the Project.

28. Attached hereto as Exhibit 5 is a true and correct copy of the Temporary Certificate of Occupancy dated April 10, 2015, for the Project.

29. Attached hereto as Exhibit 6 is a true and correct copy of a letter dated April 2, 2015, from Calvert G. Chipchase to Anthony Ching.

30. Attached hereto as Exhibit 7 is a true and correct copy of an excerpt of Downtown Capital's Petition for Waiver or Suspension of the VLT Standard in HAR § 15-217-55(k)(2) filed August 5, 2015 (the "**Waiver Petition**").

31. Attached hereto as Exhibit 8 is a true and correct copy of a letter dated August 19, 2015, from Aedward Los Banos to me.

32. Attached hereto as Exhibit 9 is a true and correct copy of the Staff Report dated July 22, 2015, for the *OMPR* case.

33. Attached hereto as Exhibit 10 is a true and correct copy of a memorandum Downtown Capital submitted to HCDA regarding waiver of the VLT standard.

34. Attached hereto as Exhibit 11 is a true and correct copy of an excerpt of the Glazing and Energy Analysis Report Relating to Visual Light Transmittance (VLT) and Leadership in Energy and Environmental Design (LEED) Requirements of the Mauka Area Rules prepared by Douglas Engineering Pacific, Inc. dated July 20, 2015, for the *OMPR* case.

35. Attached hereto as Exhibit 12 is a true and correct copy of an excerpt of the transcript of proceedings on September 2, 2015, in the *OMPR* case. Certain pages have been annotated to state the name of the person testifying.

36. Attached hereto as Exhibit 13 is a true and correct copy of the August 2015 HCDA Newsletter.

37. Attached hereto as Exhibit 14 is a true and correct copy of the Affidavit of Jon Weir dated August 20, 2015, filed in the *OMPR* case.

38. Attached hereto as Exhibit 15 is a true and correct copy of the Affidavit of Jon Weir dated July 16, 2015, filed in the *OMPR* case.

39. Attached hereto as Exhibit 16 is a true and correct copy of the notice of hearing on the Waiver Petition.

40. Attached hereto as Exhibit 17 is a true and correct copy of a letter dated March 12, 2015, from Neal I. Payton of Torti Gallas and Partners to Dan Nishikawa. The letter was filed with HCDA on May 28, 2015, in the *OMPR* case.

I declare under penalty of perjury that the foregoing is true and correct.

DATED: Honolulu, Hawai'i, September 18, 2015.

RYAN HARADA

BEFORE THE HAWAII COMMUNITY DEVELOPMENT AUTHORITY

STATE OF HAWAI'I

In re Downtown Capital LLC's Petition Appealing August 19, 2015 Notice of Violation for the Project under Development Permit No. KAK 12-109 for 801 South Street (State Tax Map Key No. (1) 2-1-047-003) Issued by Hawaii Community Development Authority on December 5, 2012	DEVELOPMENT PERMIT NO. KAK 12-109 **DECLARATION OF VITO GALATI**

DECLARATION OF VITO GALATI

I, VITO GALATI, declare of my own personal knowledge as follows:

1. Through Workforce Kakaako LLC, I am a principal of Downtown Capital, LLC ("**Downtown Capital**").

2. Downtown Capital is the owner and developer of the residential workforce housing project at 801 South Street (the "**Project**").

3. On April 2, 2015, Downtown Capital's representatives Ryan Harada, Marshall Hung, Colbert Matsumoto and I met with Hawaii Community Development Authority ("**HCDA**") Executive Director Anthony J.H. Ching. The Executive Director explained that he did not find the visual light transmittance ("**VLT**") calculations in Downtown Capital's letter dated March 23, 2015, to be compelling. Accordingly, the Director confirmed that Downtown Capital would need to file a petition for waiver or suspension of the VLT standard in HAR § 15-

EXHIBIT 12

217-55(k)(2). During the meeting, Downtown Capital presented a waiver petition to the Executive Director.

4. Thereafter, the Executive Director called Downtown Capital to request a meeting. Messrs. Harada, Hung and Matsumoto and I met with the Executive Director. The Executive Director explained that a waiver or suspension petition would not be necessary. According to the Executive Director, the matter could be handled administratively because the petition in the proceedings for *In re Petition of OliverMcMillan Pacific Rim, LLC*, Docket No. CCED KAK 2015-2 ("***OMPR***"), requested that the VLT standard be waived for the entire district. Because the Project was located within the same district as the OMPR project, the district-wide waiver would apply to Downtown Capital's project. Accordingly, the Executive Director returned Downtown Capital's waiver petition dated April 2, 2015.

5. On May 22, 2015, the Executive Director called Downtown Capital to request a meeting. Mr. Harada and I attended a meeting the same day. At the meeting, the Executive Director stated that he had been advised by HCDA's counsel that the VLT issue could not be waived district-wide and, therefore, Downtown Capital would need to submit a waiver petition. Downtown Capital disagreed with that analysis and asked that the matter be discussed at a later date when Messrs. Matsumoto and Hung were available. The Executive Director agreed.

6. On June 5, 2015, Messrs. Harada and Hung and I met with the Executive Director to discuss filing another waiver petition for the Project. Because

Mr. Matsumoto was unavailable, the Executive Director agreed to continue the meeting to another day.

7. On June 19, 2015, Messrs. Harada, Hung and Matsumoto and I met with the Executive Director. The Executive Director reiterated that the VLT issue could not be waived district-wide in the *OMPR* proceeding and that Downtown Capital needed to file a waiver petition. The Director further explained that HCDA had retained a consultant in the *OMPR* proceeding to evaluate the VLT standard and that the consultant was likely to find the VLT standard was ineffective and inconsistent with its objectives. He explained that the consultant and HCDA staff would recommend suspending, revising or repealing the VLT standard. Downtown Capital's representatives suggested that if the standard were to be repealed, a petition for waiver would not be necessary. The Director answered that a waiver would be necessary until the standard had been revised or repealed and that if a waiver was not sought, he would issue a NOV.

8. During the discussion, the Executive Director proposed that he would not issue an NOV to Downtown Capital if a waiver petition were filed by August 5, 2015. The August 5 deadline was proposed because that was the date on which the *OMPR* proceeding was set for decision-making. By that point, HCDA and Downtown Capital would have the benefit of the record, expert opinion and decision in the *OMPR* proceeding. Downtown Capital accepted the Executive Director's proposal and agreed to submit a waiver petition by August 5. The Executive Director explained that he would advise Mr. Neupane of the agreement.

9. On July 22, 2015, Mr. Harada, Downtown Capital's counsel and I attended a hearing in the *OMPR* proceeding. Before the hearing, Mr. Neupane asked me and Mr. Harada about the status of the waiver petition. Mr. Harada responded that the petition would be submitted by August 5, as the Executive Director had agreed. Mr. Neupane replied that, if the petition were not submitted by August 5, he would not be able to hold off an NOV.

10. On August 5, 2015, Mr. Harada, Downtown Capital's counsel and I attended the decision-making hearing in the *OMPR* proceeding. During the hearing, HCDA continued the matter to August 12, 2015. After the hearing concluded, Mr. Neupane approached me, Mr. Harada and Downtown Capital's counsel in the hearing room. Mr. Neupane asked whether Downtown Capital intended to submit a petition by the end of the day. Counsel responded that while a petition was ready to be filed, it might be better to delay the filing until August 12 to coincide with the conclusion of the *OMPR* proceedings. Mr. Neupane acknowledged that HCDA had wanted to conclude the *OMPR* proceedings before beginning a new waiver proceeding. Nevertheless, Mr. Neupane stated that the agreement was that an NOV would not issue if a waiver petition were filed by August 5. Consequently, Mr. Neupane explained that if a petition were filed by August 5, no NOV would issue. But if a waiver petition were not filed on August 5, he could not guarantee that a NOV would not issue.

11. Later that day on August 5, Downtown Capital filed the Waiver Petition in accordance with the agreement with HCDA.

I declare under penalty of perjury that the foregoing is true and correct.

DATED: Honolulu, Hawai'i, September 18, 2015.

VITO GALATI

BEFORE THE HAWAII COMMUNITY DEVELOPMENT AUTHORITY

STATE OF HAWAI'I

In re Downtown Capital LLC's Petition Appealing August 19, 2015 Notice of Violation for the Project under Development Permit No. KAK 12-109 for 801 South Street (State Tax Map Key No. (1) 2-1-047-003) Issued by Hawaii Community Development Authority on December 5, 2012	DEVELOPMENT PERMIT NO. KAK 12-109 **DECLARATION OF MARSHALL HUNG**

DECLARATION OF MARSHALL HUNG

I, MARSHALL HUNG, declare of my own personal knowledge as follows:

1. Through Workforce Kakaako LLC, I am a principal of Downtown Capital, LLC ("**Downtown Capital**").

2. Downtown Capital is the owner and developer of the residential workforce housing project at 801 South Street (the "**Project**").

3. On April 2, 2015, Downtown Capital's representatives Ryan Harada, Vito Galati, Colbert Matsumoto and I met with Hawaii Community Development Authority ("**HCDA**") Executive Director Anthony J.H. Ching. The Executive Director explained that he did not find the visual light transmittance ("**VLT**") calculations in Downtown Capital's letter dated March 23, 2015, to be compelling. Accordingly, the Director confirmed that Downtown Capital would need to file a petition for waiver or suspension of the VLT standard in HAR § 15-217-55(k)(2).

EXHIBIT 13

During the meeting, Downtown Capital presented a waiver petition to the Executive Director.

4. On April 8, 2015, HCDA conducted a walk-through inspection of the Project. The Executive Director and HCDA Director of Planning and Development Deepak Neupane attended the inspection for HCDA. HCDA conducted this inspection so that it could approve the certificate of occupancy that was to be issued by the City. The City would not issue the certificate unless HCDA approved its issuance. On April 9, 2015, the Executive Director called me. During the call, the Executive Director advised me that he had called City Planning Director George Atta and approved the issuance of the certificate of occupancy. On April 10, 2015, the City issued a temporary certificate of occupancy for the Project.

5. Thereafter, the Executive Director called Downtown Capital to request a meeting. Messrs. Harada, Galati and Matsumoto and I met with the Executive Director. The Executive Director explained that a waiver or suspension petition would not be necessary. According to the Executive Director, the matter could be handled administratively because the petition in the proceedings for *In re Petition of OliverMcMillan Pacific Rim, LLC*, Docket No. CCED KAK 2015-2 ("***OMPR***"), requested that the VLT standard be waived for the entire district. Because the Project was located within the same district as the OMPR project, the district-wide waiver would apply to Downtown Capital's project. Accordingly, the Executive Director returned Downtown Capital's waiver petition dated April 2, 2015.

6. On May 22, 2015, the Executive Director called Downtown Capital to request a meeting. I was unavailable for the meeting.

7. On June 5, 2015, Messrs. Harada and Galati and I met with the Executive Director to discuss filing another waiver petition for the Project. Because Mr. Matsumoto was unavailable, the Executive Director agreed to continue the meeting to another day.

8. On June 19, 2015, Messrs. Harada, Galati and Matsumoto and I met with the Executive Director. The Executive Director reiterated that the VLT issue could not be waived district-wide in the *OMPR* proceeding and that Downtown Capital needed to file a waiver petition. The Director further explained that HCDA had retained a consultant in the *OMPR* proceeding to evaluate the VLT standard and that the consultant was likely to find the VLT standard was ineffective and inconsistent with its objectives. He explained that the consultant and HCDA staff would recommend suspending, revising or repealing the VLT standard. Downtown Capital's representatives suggested that if the standard were to be repealed, a petition for waiver would not be necessary. The Director answered that a waiver would be necessary until the standard had been revised or repealed and that if a waiver was not sought, he would issue a NOV.

9. During the discussion, the Executive Director proposed that he would not issue an NOV to Downtown Capital if a waiver petition were filed by August 5, 2015. The August 5 deadline was proposed because that was the date on which the *OMPR* proceeding was set for decision-making. By that point, HCDA and

Downtown Capital would have the benefit of the record, expert opinion and decision in the *OMPR* proceeding. Downtown Capital accepted the Executive Director's proposal and agreed to submit a waiver petition by August 5. The Executive Director explained that he would advise Mr. Neupane of the agreement.

I declare under penalty of perjury that the foregoing is true and correct.

DATED: Honolulu, Hawai'i, September 18, 2015.

MARSHALL HUNG

BEFORE THE HAWAII COMMUNITY DEVELOPMENT AUTHORITY

STATE OF HAWAI'I

In re Downtown Capital LLC's Petition Appealing August 19, 2015 Notice of Violation for the Project under Development Permit No. KAK 12-109 for 801 South Street (State Tax Map Key No. (1) 2-1-047-003) Issued by Hawaii Community Development Authority on December 5, 2012	DEVELOPMENT PERMIT NO. KAK 12-109 **DECLARATION OF COLBERT MATSUMOTO**

DECLARATION OF COLBERT MATSUMOTO

I, COLBERT MATSUMOTO, declare of my own personal knowledge as follows:

1. Through South Street Towers LLC, I am a principal of Downtown Capital, LLC ("**Downtown Capital**").

2. Downtown Capital is the owner and developer of the residential workforce housing project at 801 South Street (the "**Project**").

3. On April 2, 2015, Downtown Capital's representatives Ryan Harada, Vito Galati, Marshall Hung and I met with Hawaii Community Development Authority ("**HCDA**") Executive Director Anthony J.H. Ching. The Executive Director explained that he did not find the visual light transmittance ("**VLT**") calculations in Downtown Capital's letter dated March 23, 2015, to be compelling. Accordingly, the Director confirmed that Downtown Capital would need to file a petition for waiver or suspension of the VLT standard in HAR § 15-217-55(k)(2). During the meeting, Downtown Capital presented a waiver petition to the Executive Director.

EXHIBIT 14

4. Thereafter, the Executive Director called Downtown Capital to request a meeting. Messrs. Harada, Galati and Hung and I met with the Executive Director. The Executive Director explained that a waiver or suspension petition would not be necessary. According to the Executive Director, the matter could be handled administratively because the petition in the proceedings for *In re Petition of OliverMcMillan Pacific Rim, LLC*, Docket No. CCED KAK 2015-2 ("***OMPR***"), requested that the VLT standard be waived for the entire district. Because the Project was located within the same district as the OMPR project, the district-wide waiver would apply to Downtown Capital's project. Accordingly, the Executive Director returned Downtown Capital's waiver petition dated April 2, 2015.

5. On May 22, 2015, the Executive Director called Downtown Capital to request a meeting. Messrs. Galati and Harada attended a meeting the same day. I was unavailable for the meeting.

6. On June 5, 2015, Messrs. Harada, Galati and Hung met with the Executive Director to discuss filing another waiver petition for the Project. I was unavailable for the meeting.

7. On June 19, 2015, Messrs. Harada, Galati and Hung and I met with the Executive Director. The Executive Director reiterated that the VLT issue could not be waived district-wide in the *OMPR* proceeding and that Downtown Capital needed to file a waiver petition. The Director further explained that HCDA had retained a consultant in the *OMPR* proceeding to evaluate the VLT standard and that the consultant was likely to find the VLT standard was ineffective and

inconsistent with its objectives. He explained that the consultant and HCDA staff would recommend suspending, revising or repealing the VLT standard. Downtown Capital's representatives suggested that if the standard were to be repealed, a petition for waiver would not be necessary. The Director answered that a waiver would be necessary until the standard had been revised or repealed and that if a waiver was not sought, he would issue a NOV.

8. During the discussion, the Executive Director proposed that he would not issue an NOV to Downtown Capital if a waiver petition were filed by August 5, 2015. The August 5 deadline was proposed because that was the date on which the *OMPR* proceeding was set for decision-making. By that point, HCDA and Downtown Capital would have the benefit of the record, expert opinion and decision in the *OMPR* proceeding. Downtown Capital accepted the Executive Director's proposal and agreed to submit a waiver petition by August 5. The Executive Director explained that he would advise HCDA Director of Planning and Development Deepak Neupane of the agreement.

I declare under penalty of perjury that the foregoing is true and correct.

DATED: Honolulu, Hawai'i, September 18, 2015.

COLBERT MATSUMOTO

HCDA may suspend enforcement of HAR § 15-217-55(k)(2) pending determination of whether the rule should be amended or repealed.

HCDA's express power:

- HAR § 15-219-98 provides:

  (a) Every petition for a waiver of any of the provisions of the administrative rules of HCDA's community development districts shall be in writing, signed by the petitioner, and submitted to the authority for approval.

  (b) Every petition shall state:

  (1) The name, address, and telephone number of the petitioner and the petitioner's legal counsel, if any, which shall be updated by the petition at all times;

  (2) The specific provision of the administrative rules of HCDA's community development districts for which petitioner seeks a waiver;

  (3) The effect of the strict application of the provision for which petitioner seeks a waiver;

  (4) The reasons why the petitioner seeks to avoid the strict application of the provision for which petitioner seeks a waiver;

  (5) An alternate plan or other means by which the spirit and intent of the provision for which petitioner seeks a waiver can be accomplished other than the strict application of the provision;

  * * *

  (e) No waiver shall be granted by the authority unless the petition and supporting information demonstrate that:

  (1) Granting the waiver will not endanger the health, safety, or welfare of the subject community development district; and

  (2) There is either an alternate means for which the spirit and intent of the provision for which petitioner seeks a waiver can be accomplished or the waiver of the strict application of the provision is in the best interest of the subject community development district.

- Under this rule:
  - A petition only needs to identify the "rules" to be suspended, the "effect" of the rules and an alternate plan by which the spirit and intent of the rules can be accomplished.

EXHIBIT 15

- A suspension petition is not required to be limited to a specific "project."

- On the contrary, the petition is "district" oriented. The petition must identify the extent to which the suspension is in the best interest of the "subject community development district" and the extent to which the suspension may endanger the health, safety or welfare of the "subject community development district."

HCDA's implied powers:

- "Except as otherwise limited by this chapter, the authority may: . . . (17) Do any and all things necessary to carry out its purposes and exercise the powers given and granted in this chapter . . . ." HRS § 206E-4.

- "[A]n administrative agency's authority includes those implied powers that are reasonably necessary to carry out the powers expressly granted." *State v. Nakanelua*, 134 Hawai'i 489, 514, 345 P.3d 155, 180 (2015).

- "[A]s a practical matter, the legislature cannot foresee all the problems incidental to carrying out the duties and responsibilities of the agency." *Morgan v. Planning Dep't, County of Kauai*, 104 Hawai'i 173, 184, 86 P.3d 982, 993 (2004).

An agency has the power to suspend a rule as to all persons when the agency is considering amending or repealing the rule in question or other special circumstances exist:

- For example, courts routinely uphold moratoria on development that are *sua sponte* adopted by the permitting agency while the agency considers comprehensive zoning planning. *See Almquist v. Town of Marshan*, 245 N.W.2d 819, 826 (Minn. 1976); *Arnold Bernhard & Co. v. Planning & Zoning Comm'n*, 479 A.2d 801, 805-06 (Conn. 1984); *Dill v. Bd. of County Comm'rs of Lincoln Cty.*, 928 P.2d 809, 813 (Colo. Ct. App. 1996).

- In various other contexts, courts have upheld an agency's *sua sponte* decision to suspend its rules. For instance, in *Retail Liquor Dealers Ass'n of Delaware v. Delaware*, the liquor commission voted, on its own motion and in executive session, to suspended application of a price regulation rule generally as it applied to all persons licensed by the commission out of concern that the rule was illegal. 1980 WL 273545, *1 (Del. Ch. Ct. 1980). Liquor retailers challenged the rule suspension, arguing in part that the "suspension [was] . . . unlawful and void because [the commission] lacked express statutory authority to suspend [the] Rule . . . ." *Id.* at *3. The court rejected this argument:

[The liquor commission] has the implied statutory authority to suspend enforcement of its own rules and regulations and accordingly plaintiffs' argument that said agency's action is void as unauthorized is without merit. While it is well established that administrative agencies derive their powers and authority solely from the statute creating them and defining their powers and that the defendant possesses no powers other than those conferred upon it by statute, it is equally well established than an express legislative grant of power or authority to an administrative agency includes, by implication, the grant of power to do what is reasonably necessary to be done to implement such power and authority. And in determining whether or not there is an implied grant of authority, a particular statutory scheme must be viewed in its totality. When an agency is vested with a broad range of discretionary powers[, **including to power to revoke, amend, and repeal rules**,] it is likely that the General Assembly intended to vest implied authority in such agency to do that which is incidental, implied, necessary and proper in light of the objectives sought to be gained and in light of the express powers granted. **I accordingly conclude that defendant's action in temporarily suspending the force and effect of [the] Rule [] was not per se void for lack of authority.**

Id. (citations and footnote omitted; emphasis added).

- In *Molinari v. Quayle*, the fire department commissioner, on his own initiative, entered an order appointing as firemen individuals who had previously been denied appointments because of their draft status. The fire department had a rule mandating an examination of applicants by a departmental medical board. On review, the court held that the appointment order operated to modify the rule regarding medical examinations so that the examination could occur after appointment. As the court explained, the department "could waive its own rule, or modify it in special circumstances . . . ." 88 N.E.2d 820, 22 (N.Y. 1949).

- In *International Union of Civil Rights & Social Service Employees v. Michigan Civil Service Commission*, a commission was authorized to "make rules and regulations covering all personnel transactions, and regulate all conditions of employment in the classified service." Several months after adopting regulations regarding recognition of employee organizations, the commission, on its own motion, directed that acceptance of further applications for recognition would be held by staff and **the regulations would be temporarily suspended pending review of the regulations for their effect on employment relations**. On review, the court held that the agency had the authority to suspend its regulations because "[a]n

administrative agency may amend, rescind or suspend its rules and regulations." 226 N.W.2d 550, 552 (Mich. Ct. App. 1975).

- Where the agency's rules allow a interested parties to petition for waiver or suspension of a rule, temporary suspensions of rules have been approved:
    - For example, 47 C.F.R. § 1.3 states that the FCC's regulations "may be suspended, revoked, amended, or waived for good cause shown, in whole or in part, at any time by the Commission . . . ." Pursuant to section 1.3, petitions by certain parties were made to suspend a regulation that would have required the development of new technologies. *See In re Telecommunications Relay Services, & the Americans with Disabilities Act of 1990*, 8 F.C.C. Rcd. 8385, 1993 WL 489811 (F.C.C. Nov. 29, 1993). In response to the petitions, the FCC suspended the regulation across the board for two years.
    - The FCC *sua sponte* stayed a rule for six months where a rule was vacated by a federal appellate court, but the court's decision was subsequently reversed by the Supreme Court. *See In re Implementation of Local Competition Provisions of Telecommunications Act of 1996*, 14 F.C.C. 8300, 1999 WL 284905 (F.C.C. May 7, 1999).
    - Under facts similar to our own, the FCC *sua sponte* suspended certain new rules so that a task force could review the rules before they were implemented. *See In re Federal-State Joint Conference on Accounting Issues*, 17 F.C.C. Rcd. 23243, 2002 WL 31500586 (F.C.C. Nov. 12, 2002) (suspending rules for several months).
- Here, HCDA has the implied power and, where certain conditions are met, the express power to suspend a particular rule district-wide, because HCDA is considering amending or repealing the rule in question. The district-wide suspension may remain in effect until HCDA has determined whether to amend or repeal the rule in question. If HCDA ultimately determines not to amend or repeal the rule in question, nothing precludes HCDA from taking further action once the suspension period ends.

HAWAII COMMUNITY DEVELOPMENT AUTHORITY

STATE OF HAWAII

In re:

The Application of

OLIVERMcMILLAN PACIFIC RIM, LLC,

Applicant,

To amend Development Permit No. KAK 12-075 by waiving or permanently suspending the requirement of HAR §15-217-55(k)(2) for the Symphony Honolulu project and that such waiver or permanent suspension be retroactive from April 5, 2015.

TRANSCRIPT OF PROCEEDINGS

Wednesday, September 2, 2015

Taken at 547 Queen Street, Second Floor

Honolulu, Hawaii 96813

commencing at 1:12 p.m.

Reported by: LAURA SAVO, CSR No. 347

EXHIBIT 16

A P E A R A N C E S

John Whalen, Chairperson

Steven Scott, Vice Chairperson

Deepak Neupane, Dir. of Planning and Development

Lori Tanigawa, Deputy Attorney General

Michael Wong, Deputy Attorney General

BOARD MEMBERS:

Tracy Ban

Beau Bassett

Jade Butay

Tom McLaughlin

William Oh

Jason Okuhama

Mary Pat Waterhouse

ALSO PRESENT:

For Petitioner OliverMcMillan Pacific Rim, LLC:

D. SCOTT MacKINNON, ESQ.
SCOT MATAYOSHI, ESQ.
JESSICA M. WAN, ESQ.
McCorriston Miller Mukai MacKinnon, LLP
500 Ala Moana Boulevard, Suite 5-400
Honolulu, Hawaii 96813

Dan Nishikawa, President
OliverMcMillan Pacific Rim, LLC

For Respondent HCDA:

DIANE TAIRA, ESQ.
Deputy Attorney General
425 Queen Street
Honolulu, Hawaii 96813

I N D E X

			PAGE
Call to Order			5
Adjournment			43
WITNESSES FOR THE PETITIONER:			
JOHN WEIR			
	Examination by:	Member Bassett	7
		Vice Chair Scott	9, 20
		Chair Whalen	11
DANIEL MOATS			
	Examination by:	Vice Chair Scott	23
		Member Waterhouse	24
WITNESSES FOR THE RESPONDENT:			
PATRICK YEN			
	Examination by:	Member Bassett	15, 17
		Member Waterhouse	16
		Vice Chair Scott	18
EXHIBITS OFFERED FOR THE RECORD:			
Respondent HCDA Exhibit B			12

(All Exhibits are retained by HCDA.)

I N D E X

PUBLIC TESTIMONY BY:	PAGE
Clara Morikawa	30
John Kobelansky, Jr.	32
Sharon Moriwaki	35
Evelyn Calori	39
Jack Hamada	40

Honolulu, Hawaii September 2, 2015, 1:12 p.m.

-o0o-

CHAIR WHALEN: I'll call to order the September 2nd, 2015, public hearing of the Hawaii Community Development Authority. The time is now 1:12 still. Thank you for your interest in Kaka'ako and your attendance today.

My name is John Whalen, chair of the Authority. Let the record reflect that the following Kaka'ako members are present: Jason Okuhama, Jade Butay, Mary Pat Waterhouse, Tom McLaughlin, Tracy Ban, William Oh, Steven Scott, John Whalen and Beau Bassett.

So counsel for the Appellant, please make your appearance.

MR. MacKINNON: Yes. Scott MacKinnon appearing on behalf of the Petitioner OliverMcMillan Pacific Rim, LLC, and I have to my right, President of OliverMcMillan Pacific Rim, LLC, Daniel Nishikawa.

CHAIR WHALEN: Okay. Thank you.

Petitioner OliverMcMillan Pacific Rim, LLC, requests the HCDA amend Development Permit No. KAK 12-075 by waiving or permanently suspending the requirement of Hawaii Administrative Rules

15-217-55(k)(2) for the Symphony Honolulu project and that such waiver or permanent suspension be retroactive from April 5th, 2015.

As indicated at our last hearing, we'll be reopening the evidentiary portion of this hearings process to accept additional evidence. After we close the evidentiary portion, the public will be afforded an opportunity to offer comments on the petition prior to the Authority convening in another room to consult privately with its attorneys.

I would like to ask Member Bassett to pose his question again that you posed earlier.

MEMBER BASSETT: Oh, okay.

CHAIR WHALEN: And the Petitioner will then be afforded the opportunity to answer Member Bassett's question followed by HCDA staff.

Member Bassett.

MEMBER BASSETT: The question posed was asking what is the maximum reflectivity that can come with the window that has 50 percent VLT.

MR. MacKINNON: To respond to Member Bassett's question, we did submit a supplemental affidavit from our glazing consultant, Jon Weir, of JA Weir Associates, and he is here to provide

testimony in response to the member's question.

CHAIR WHALEN: Okay.

MR. MacKINNON: Jon?

CHAIR WHALEN: I'd remind you you're still under oath.

MR. WEIR: Understood.

JON WEIR,

called as a witness for the Petitioner, was previously sworn/affirmed to tell the truth and testified as follows:

THE WITNESS: With regards to the question, the best answer that we can give you on something like that is there is no correlation with regards to reflectivity versus visible light transmittance. We could find numbers throughout the industry, but these numbers change almost daily. And so apologies, but there's no specific number at 50 percent VLT what that could be. It could range quite a bit, actually.

EXAMINATION

BY MEMBER BASSETT:

Q Can I follow up?

When you say that these figures could change daily, what is the reasons for those changes?

A The glass industry is changing their product from time to time, and right now they are rolling into newer technology and coatings. And so whether everything is in print at this time, we're not really sure, but the major thing was we could find no correlation between the two. So there was no way to judge 50 percent visible light transmittance versus what does that equate in reflectivity. It can range almost the spectrum. I believe 33, maybe 34, but I believe it's 33 percent is what we found in U.S. products.

Q You said 33 percent reflectivity would be the maximum amount that would come from a 50 percent VLT in U.S. products?

A That's what we found in the U.S. products of Viracon, PPG and Guardian.

Q And why did you list those three suppliers, Viracon, PPG and Guardian?

A They are the most typically used, and their numbers are a little more -- we trust their numbers a little more than some of the numbers that we've received from overseas firms in the long run. We're not always exactly sure. We get what we get when it's some of the foreign firms.

Q So --

A They use a different way of measuring, and so it's hard to put it in U.S. terms. They say that they're giving us this, but until we independently test it, we're not sure.

Q So I'll reask it in clear, layman's terms. Your research has showed that in the U.S. market, considering these three companies, that a window that had 50 percent VLT would not have a reflectivity over 33 percent?

A Yes.

Q Okay. Thank you.

EXAMINATION

BY VICE CHAIR SCOTT:

Q I have a question here. When you say reflectivity of 33 percent, what does that mean?

A That is -- so it's spectral reflectance. It's the reflectance of light back off of the glass.

Q So you get 33 percent of the light coming in, 33 percent comes off or what? I mean --

A Yeah. 33 percent is reflected off. That is the spectral. There is also a diffuse reflectivity where some light deflects angular away from the glass, which is almost impossible to measure. So there's two that make up reflectivity;

however, the main one and the one you're speaking of is the spectral reflectivity, which is the light that comes back off of the glass.

Q So if I'm driving down the street and there is a building up there that reflects glass or reflects light into my eyes as I'm driving down the street, that is the 33 percent that's actually coming off?

A Yes. If light did, that would be the light I'm speaking of, yes.

Q And a lot of that depends, obviously, on the angle to the sun and where it gets reflected?

A It not only depends on that, it depends a lot on the different coatings. We've gone generations in coatings from where we started with reflective coatings and where we are now. The coatings themselves have various layers of metal inside of them. These layers of metal are all designed to provide a specific defense against something, and it's one of the reasons that the reflectivity doesn't really align with visible light. But in the case of our building, our glass mutes any light that comes back off of it because it's going into and in-between four different layers of metal that the product is made from.

Q That's on the glass that's on the Symphony --

A Yes, sir.

Q -- building?

EXAMINATION

BY CHAIR WHALEN:

Q You provide standards for or recommendations on glass selection for buildings being built outside of Kaka'ako in the city and county of Honolulu?

A Yes, sir.

Q Does the city and county of Honolulu have a standard establishing maximum degree of reflectivity?

A No, they do not.

Q They do not. Okay.

I understand that the international building code or there's an international energy conservation code. I think the 2015 version of that code has certain standards for glass products. To your knowledge, does it have any kind of standard for maximum reflectivity that might apply to window wall construction?

A To my knowledge, no.

Q It does not?

A The energy code is really with much more regards to the solar heat gain coefficient and, in particular, the U value, which is more important in a colder environment.

CHAIR WHALEN: Okay. Thank you.

Any other questions?

Does the HCDA staff have any exhibits or witnesses to present at this point?

MR. NEUPANE: Yes, Chair Whalen. The consultants are here, and they have prepared a graph of VLT versus reflectance based on over a hundred different glass with the manufacturers that was mentioned, Viracon and the same three manufacturers. So I just wanted to provide that information to the board. And just to summarize the results, basically, it says that, you know, mathematically, it shows that there is no correlation between the two data points.

CHAIR WHALEN: Does Appellant have any objections to submittal of that --

MR. MacKINNON: No, we don't. And, Mr. Chair, is Mr. Weir excused?

CHAIR WHALEN: Oh, yeah. Mr. Weir is excused. Thank you.

(HCDA Exhibit B is offered.)

CHAIR WHALEN: If there are any questions regarding this chart, which is probably perplexing to most of us on the board, in terms of how to interpret it.

MR. NEUPANE: Let me provide a little bit of a description. On the horizontal line, there is percentage VLT plotted, and then the vertical line is the reflectance. And as you can see, I believe the consultant took more than a hundred different glass products from three different manufacturers and plotted reflectance versus VLT.

The data ranges from the VLT of, say, I guess, about maybe 6 all the way to 80 percent, and the reflectance of maybe 4 percent all the way to about slightly over 45, maybe 46 percent. And there is a number on top. That's called the correlation coefficient, and that indicates whether the two are correlated or not. So if it's pretty much closer to zero means that there's really no correlation between the two, meaning that one data is not dependent on the other.

CHAIR WHALEN: So VLT does not control --

MR. NEUPANE: Control reflectance.

CHAIR WHALEN: -- reflectance?

MR. NEUPANE: This is more a mathematical

formulation of what was provided as a qualitative statement.

CHAIR WHALEN: Okay.

MEMBER OKUHAMA: Deepak, so the glass right now at Symphony is using which dot on this?

MR. NEUPANE: I think -- you know, we didn't specifically look at Symphony glass, but I know the data. So we probably would be looking more at like the reflectance is probably --

Is that glass on the data?

MR. YEN: It's inside the data, but it's not --

MR. NEUPANE: It is difficult for me to say from here exactly which dot is it, but it was part of the data set that was plotted.

MEMBER OKUHAMA: But the reflectivity on this window is 48 percent?

MR. NEUPANE: Yeah.

MEMBER OKUHAMA: So it would be up here where 48 percent is --

MR. NEUPANE: It would somewhere up there, yeah.

MEMBER OKUHAMA: -- on the top section?

MR. NEUPANE: Yeah.

MEMBER BASSETT: Should we call the

witness?

CHAIR WHALEN: Is the witness -- okay. Thank you.

MR. NEUPANE: Yeah, the consultant is here.

PATRICK YEN,

called as witness for the Respondent, was previously sworn/affirmed to tell the truth and testified as follows:

CHAIR WHALEN: As a reminder, you're still under oath.

THE WITNESS: I understand.

EXAMINATION

BY MEMBER BASSETT:

Q So you were able to hear the testimony of Mr. Weir?

A Yes.

Q And his testimony that with his assessment, 50 percent VLT, you wouldn't typically get in the United States a reflectivity higher than 33 percent?

A Correct.

Q Does that seem about right in your assessment?

A Yeah.

Q And he was also speaking about spectral reflectance --

A Uh-huh.

Q -- as being the kind of reflectance that he would be measuring.

A Yes.

Q Do you agree with that?

A Yes.

Q Okay. Thank you.

CHAIR WHALEN: Any other questions or witnesses? Questions of this witness first and any other witnesses? Yes?

EXAMINATION

BY MEMBER WATERHOUSE:

Q Just to confirm, the reflectivity -- I'm not too sure if you checked this. The reflectivity of the Symphony glass is 48 percent? Is that your understanding?

A I don't think it's 40 (sic) percent. I think it's a lower value, but I think the other party might be able to answer that directly. The point is in here, but it's not specifically marked.

MEMBER BASSETT: I have a question.

CHAIR WHALEN: Yes.

///

EXAMINATION

BY MEMBER BASSETT:

Q Between 33 percent and, let's say, 45 percent --

A Uh-huh.

Q -- as a person who is on the other side of the glass, the light is reflected toward me, would I be able to tell the difference between a 33 percent reflectance and a 45 percent reflectance?

A If you're standing from inside the building and --

Q No. If I'm outside.

A Oh, that I really can't say. I've seen images of glass where the reflectance is on the lower spectrum versus one that's on the higher spectrum, let's say, between like 35 and above versus something like around 15. You can tell a difference, but if it's something closer to how you explained to like 30 and 45, I'm actually not sure if you can tell a difference from the outside.

Q You characterized -- you said a range there of reflectance. You said a low end and you said some numbers. What was your low end?

A From what I understand and from what I've read from manufacturers, lower end reflectance is

around 20 percent, 25 percent or lower.

Q Thank you.

CHAIR WHALEN: Any more questions of this witness?

EXAMINATION

BY VICE CHAIR SCOTT:

Q Actually, I have a question.

On this chart, there are a lot of dots that are down here around the 5 to 15 percent reflectance. Why is -- and then you're saying that Symphony is up here around the upper reaches?

A As far as the Symphony that's on -- or the glass that's on the Symphony building right now, I'm not sure which reflectance spectrum it's in. I'd have to double-check. But as -- that answers that part of the question, but I guess you had a second part to the question?

Q There's a lot of, obviously, glasses that are down here in the 5 to 15 percent range, and, yet, Symphony is where?

Mr. Weir, where is Symphony?

MR. WEIR: On the reflectivity?

VICE CHAIR SCOTT: Yes.

MR. WEIR: It's on the upper ranges. It's probably one of the two upper ones on the

reflectivity.

VICE CHAIR SCOTT: Up here on the very high?

MR. WEIR: Yes.

VICE CHAIR SCOTT: So you're -- Symphony is using something that is at the upper reaches, and, yet, there are quite a few that are down here in the lower range?

MR. WEIR: Yes.

VICE CHAIR SCOTT: Why is that?

MR. WEIR: The solar heat gain coefficient on those glasses that you're talking of down below would not meet our requirements.

VICE CHAIR SCOTT: So even though the VLT is -- even though the VLT is low, it doesn't meet your solar heat gain requirements?

MR. WEIR: No. No, sir, it did not.

VICE CHAIR SCOTT: And why would that be?

MR. WEIR: It all depends on the glass product itself.

Do you need me to step back up?

VICE CHAIR SCOTT: You can do that.

CHAIR WHALEN: You're under oath no matter where you sit.

MR. WEIR: Fully understood.

VICE CHAIR SCOTT: Even if you're not here.

JON WEIR,

recalled as a witness for the Petitioner, was previously sworn/affirmed to tell the truth and testified as follows:

EXAMINATION

BY VICE CHAIR SCOTT:

Q I guess I'm trying to figure out, there seem to be a lot of glasses that are down here in this low reflectivity, and like you say, you don't know what their solar heat gain is, but there seems to be a lot of choices that don't necessarily get up here above 40 percent.

A Yes. There are many choices, as that graph shows. As we found in our, you know, last investigation, the best we could do was a 50 percent VLT --

Thank you.

-- 50 versus VLT and 22 percent solar heat gain coefficient, and our requirements when we were designing the building was .19. So they did not make it.

Q So the decision for OliverMcMillan was based solely on the solar heat gain or your energy

efficiency, I guess, your LEED requirement?

A I hate to answer for OliverMcMillan, but as far as our technical experience to give to them, that was exactly what we were basing it on was the energy performance.

VICE CHAIR SCOTT: Okay. And out of curiosity --

This is for OliverMcMillan.

MR. NISHIKAWA: Yes.

VICE CHAIR SCOTT: -- did you know at the time you made the decision that you were going to be having reflectivity up at the higher range of this --

MR. NISHIKAWA: No. We were presented with the glass as Mr. Weir stated. They gave us some glass to choose from, and we were not made aware of the VLT issue or potential reflectivity issue. Neither of those -- neither of those criteria was pointed out to us as the owner or developer of the project --

VICE CHAIR SCOTT: So you weren't aware --

MR. NISHIKAWA: -- unfortunately.

VICE CHAIR SCOTT: -- of the requirement or the objective of the --

MR. NISHIKAWA: Our consultants did not make us -- were not aware of it either at that time, unfortunately.

VICE CHAIR SCOTT: Okay. And who were your consultants?

MR. NISHIKAWA: Architects Hawaii was our architect. Notkin was our mechanical engineer, and Jon Weir was the glass consultant working for --

VICE CHAIR SCOTT: Was your architect aware of the reflectivity of the glass that they were recommending to you that you chose?

MR. NISHIKAWA: I can't answer for them, but we were made aware of that. They're here. So our architect is here. So if you want to ask them, you can ask them.

VICE CHAIR SCOTT: Sure. Have him step forward.

MR. MOATS: Could you repeat your question?

CHAIR WHALEN: Could you just --

VICE CHAIR SCOTT: Identify yourself.

MR. MOATS: Daniel Moats, Architects Hawaii.

CHAIR WHALEN: And you're testifying under oath. So thank you.

DANIEL MOATS,

called as a witness for the Petitioner, was sworn/affirmed to tell the truth and testified as follows:

EXAMINATION

BY VICE CHAIR SCOTT:

Q Well, my question is were you aware that the HCDA was trying to resolve problems both with regards to the solar heat gain and the reflectivity when you made this recommendation?

A We were aware of the energy intent through the LEED requirements as well as the state energy codes, which was our focus. When the glass was selected, that's what we had great discussions and great amount of effort put in by multiple consultants to find the product that we could meet this minimum prerequisite.

Q And that was for the energy efficiency?

A Yes, sir.

Q And there was never any discussion or any awareness that reflectivity was an issue?

A The rule was based on, I believe, VLT. So --

Q VLT?

A Yes.

Q I understand that. I'm trying to determine what was communicated to you from HCDA with regards to this rule, if there's any --

A We weren't clear on the intent at the time that the VLT was --

The purpose of that was not really for VLT.

Q So reflectivity never came up?

A Not in our correspondence with HCDA, no.

EXAMINATION

BY MEMBER WATERHOUSE:

Q But you were aware of the VLT rule? Are you telling --

A We became aware of the VLT rule after selection of the glass, and it was then brought to our attention.

Q So --

A And we did not, basically, understand the intent was for reflectivity until this case or hearings.

Q But as far as reading Kaka'ako rules, did you guys do that or the contractor? Did the builders do that?

A These are --

Q Did anyone do that?

A These are new rules, and, yes, we did our best to go through them. Again, the VLT is something that is new. It's not referenced in many other codes. In fact, we found none. So we were definitely aware of the importance for energy as that is the main goal that our industry looks at, complying with energy in the future. Again, we're meeting -- we're barely meeting the prerequisite. The future is looking for silver, gold and platinum level buildings.

Q But my understanding is in the city and the state, when you have a strict rule and a rule that is kind of vague, you always follow the stricter rule, and the vague rule -- the strict rule here is VLT is 50 percent. The vague rule is you need to meet LEED. Now, you guys have chosen to go, you know, silver, gold, whatever, but that's not -- that wasn't in our rules.

A It is in the Green Building rules that we have to meet these requirements for energy. It is mandatory.

Q But that's the base rules; right? That was the base. That's the --

A It's a prerequisite, meaning we don't comply unless we meet this requirement for energy.

Q Are you talking about our Mauka Area Rules?

A Yes.

Q It doesn't say silver or gold.

A No, it doesn't. It's a prerequisite and that's what we are just meeting. So we don't achieve what the future is. In our industry, what we try to achieve in our goals, we're just meeting a prerequisite by, I believe .2. The minimum prerequisite is 10 percent savings annually and we're at 10.2.

Q Thank you.

MR. WEIR: Mr. Scott, can I --

VICE CHAIR SCOTT: Yes.

MR. WEIR: -- follow up on one thing --

VICE CHAIR SCOTT: Certainly.

MR. WEIR: -- with regards to reflectivity?

The one unknown about this product that we used is the Viracon VRE series is a Low-E coating that, while it carries reflectivity, it also reacts differently in light. And I used this product or not this product, but I used a VRE product on the L.A. Live in Los Angeles. When it's in direct sunlight, it goes transparent. You can

look right through it. So we had all intentions that this product would have some reaction of that sort. We were not given anything to tell us differently, and up until the glass selection was samples, there wasn't really a lot we could do. All we could do was expect what the other glasses in this family did. And as it works out, while it does react a little, it doesn't react to the amount that some of the other ones do. Obviously, the other ones didn't meet our requirements, but just to give you a little bit of the history as to we truly didn't go blindly into this. It was expected that the glass would taper down on reflectivity quite a bit.

VICE CHAIR SCOTT: I guess this is a question that I want, in my own mind, clarified. At any time prior to your selection of the glass, were you made aware by anyone, either at HCDA or anywhere else, that reflectivity was going to be such a big deal and a requirement or was it more the energy efficiency?

MR. WEIR: It was complete energy efficiency. We -- working throughout the island, we have not run across anything brought up about reflectivity on any of our other buildings, and

this was the same. We did not.

VICE CHAIR SCOTT: Okay.

CHAIR WHALEN: Yes?

MEMBER OH: This question's for both our counsel, our consultant and also Mr. Weir as well.

This glass that's currently in place, do you have any particular buildings anywhere in the world that's using this particular glass right now that's been used -- where this glass has been used in a building?

MR. WEIR: We could request a list from Viracon. We didn't believe that was pertinent here, but we could request a list from Viracon, and I'm sure they have a database.

MEMBER OH: I think -- that was just based on my own curiosity, obviously, but I think it would help to kind of set a level of precedence and where it's been used, how it's working out, how the public's been reacting to it, have there been any instances or cases of any safety hazards. That's probably one thing that could be utilized.

MR. WEIR: Understood.

MEMBER BASSETT: I have a question for Mr. Weir regarding the reflectivity question. I asked the other -- the witness for HCDA if he knew

of any detectible difference for a person between 33 percent and, let's say, 45 percent of reflectivity of spectral reflectance.

MR. WEIR: I would believe that you would not be able to tell between those two percentages.

MEMBER BASSETT: Because at 33 percent -- well, have you personally observed the reflectance of a window that has 33 percent spectral reflectivity?

MR. WEIR: I believe our project on the Ritz, I believe, is 36 percent.

MEMBER BASSETT: And were you able to observe the reflectivity off that building?

MR. WEIR: Not -- it just doesn't compare. They're both -- sorry for this, but they're both shiny. You know, I cannot tell the difference in that type of a level.

MEMBER BASSETT: Thank you.

CHAIR WHALEN: Any other questions from board members of any of the witnesses that we have?

Okay. We will now receive public testimony. Speakers will be called up --

Thank you, witnesses. You may be relieved.

Speakers will be called up to testify in

the order in which they've signed up. Testimony, we like to limit it to three minutes, but if you absolutely have some urgent message to give, we can give a lot more time.

When you are called up, please come up to the witness table and speak directly into the microphone for our court reporter. Please state your name and any organization that you're representing. The first person is Clara Morikawa.

MS. MORIKAWA: Good afternoon, Mr. Whalen and HCDA members. My name is Clara Morikawa, a Kaka'ako resident.

OliverMcMillan and staff were well aware of HCDA's Mauka Area Rule pertinent to window glazing. The former HCDA had already approved the repositioning of the building to reduce the use of air conditioners to help the Symphony meet the green energy rule, even as it countered the view-plane requirements.

It's been a few years from the design approval to the ground breaking in 2014, but the rule was never questioned. They were fully aware that the glass was not in compliance when the order was placed in 2013. Could they have assumed that once installed, they would not be required to

remove the glass? It was in February, seven months ago, that they were notified of the violation. Their attorney declared that they would continue to build. Mr. McMillan claims that the green energy rule is more important than the glass rule. His priority is misplaced because the glass rule is specific, and there are various methods and programs that can be employed to handle the green energy requirements all at the discretion of the developer.

22 years ago, we selected an eastern exposure at the Imperial Plaza to avoid the grueling afternoon sun. The glare from the Symphony's makai-facing wall is now projected into our apartment in the afternoon, and as the sun moves westward, we also get the glare from the Symphony's Ewa wall. Because of its concentration, the glare seems even brighter than sunlight.

Developers must be cognizant of their project's effect on their neighbors, and their concern must also be for the safety of the public in cars and on streets and sidewalks.

When we elect to ignore or disregard rules, we know there will be consequences. The Symphony team was totally aware of this infraction

and took their chances. They knowingly created this problem, and it is now their responsibility to correct it. Regretfully, it will be a costly project, but they must find a method to diffuse the light.

Thank you for this opportunity to voice my concerns.

CHAIR WHALEN: Thank you.

Board members, any questions of the witness?

Thank you, Mrs. Morikawa.

John Kobelansky.

MR. KOBELANSKY: Good morning. Excuse me. Afternoon, members. I'm John Kobelansky, Jr., concerned area resident of Kaka'ako, and I thought I'd lighten the mood a little bit by showing you or reading to you a little comic strip that I saw on Sunday's paper.

This guy sitting under a palm tree is all in yellow. He's got a nose that's bigger than mine. He says, "This is really bad. The beaches in Waikiki were closed because the sewage system could not handle all the rain."

Next panel, it says, "What should we do?" And he goes, "Hmmm."

The last panel says, "I know. Build more condos."

This kind of expresses the sentiment of most of the people that live in Kaka'ako. What's happening here, you know? We're going to let these people get away with things, or are we going to address the issue right now before it gets worse? Because the plan is to build another three dozen high-rise buildings, if not more, in the Kaka'ako mauka area. We let one glass building go, what's going to happen if they put up two or three dozen more? I just can't imagine light ping-ponging and bouncing off of all these buildings and reflecting into our eyes, into the traffic, onto the beaches, people on the sidewalks.

Also, another thing to consider is because the weather patterns have changed drastically in the last year because of El Nino, we have more heat than ever before. Record highs across the state, all the islands. This is only going to compound the problem by allowing this to continue.

Okay. So that was the lighthearted discussion. Okay. Now we're going to get -- I copied this down and you guys -- everybody should

know this because these are the rules verbatim from mauka area 15-217-55(k)(2). It says, "No. 1, highly reflective, mirrored and opaque window glazing are prohibited." Reflective -- highly reflective, which is what's going up at the Symphony, mirrored, which is what it is, is prohibited, No. 1.

No. 2, it talks about, "Window glazing shall be transparent," which means some light goes through, and I guess some does because, otherwise, you can't see out, "with clear or limited UV tint so as to provide views out of and into the building." There's no views into the building. So this is rule No. 2.

And then they talk about, "Visible light transmission on the ground floor shall be 70 percent or greater, and other floors, visible light transmission shall be 50 percent or greater." I think the key here is the mirrored glass. That's No. 1.

So what does this all mean? Okay. This is what it means. The Mauka Area Rules were adopted to protect and promote the public health, safety and general welfare of the community. That's the key here. A lot of complaints about

this glare coming off of these windows is affecting the community, and it's almost a joke. When I go to the beach now, everybody says, "Yeah, what are they going to do? Slam all those buildings in there and those light rays reflecting all over the place? They must be crazy." This is the things I'm hearing on the street. So what are we doing here? We need to establish the ground rules, and right now is the time to do it. So the intent of the rule is to protect the community, the No. 1 intent. Okay?

I was going to read this stuff about engineering and all this kind of stuff. I'm not going to do that. My conclusion is this. Enough with the excuse already. Let's be part of the solution and not part of the problem. Do it for the community. It's pono. It's the right thing to do. Thank you very much.

CHAIR WHALEN: Thank you, Mr. Kobelansky.

Oh, any questions of the speaker?

Sharon Morikawa (sic).

MS. MORIWAKI: Good afternoon, Mr. Whalen, members. Sharon Moriwaki from the Kaka'ako United.

You've heard the neighbors' concerns, and

those are the people around. I'm looking at the right thing again. Petitioner's request to waive or permanently suspend one of the area-wide architectural design standards under the Mauka Area Rules, as John said, it was to protect and ensure that the community was built correctly to meet the requirements of the Mauka Area Plan. What's happened is developers have been allowed to not follow the rules. The rules really should be followed unless there's strong evidence of the necessity or unnecessary hardship for the need for a variance. That was never done by the developer in this case. In fact, it was never brought to the attention of the developer, nor the developer to the HCDA.

When Petitioner got its permit, the precondition was that it meet all the rules of the mauka area. And so it was beholden upon the developer to actually read the rules and to have his consultants or its consultants read the rules and to abide by them. Whether the LEED standard was something that was there because we want energy efficient buildings for sustainable living, it really is the explicit rules of the plan that is required of the developer. The months that are

spent with the HCDA assisting them, it should have been ironed out. And if, in fact, they couldn't meet the LEED standard with the materials they had, it should have come back to HCDA either for a rule change that these standards don't really meet the LEED requirement, or in the alternative, they should have come forward with a variance as to why it was unnecessary hardship for them to meet that rule. They did neither. And if the board were to look at this petition, I think it should be denied. They should change the windows out.

I mean, that would be the severe scenario because to condone developers or anyone not following rules that the HCDA has developed for the sole purpose of ensuring that we have a model community based on plans that were developed with myriads of people working on it is to be a slap in the face and an undermining and a violation of the law.

So in looking forward as to what to do when a developer has disregarded the rules and has knowingly disregarded the rules, something should be done so that there aren't other developers who can come in, which they're already waiting in the wings, to say, "Oh, well, you've already allowed

this. So now I can do it too. I can continue to disregard the rule because it was approved by the HCDA." And that is exactly the kind of approach and procedure that creates distrust in the community of an agency that is stewarding the community's well-being. And this is why I came forward today because I think it's beyond this one, whatever --

Is it 20 percent or 40 percent or 70 percent?

-- reflectivity of the glass. It really is the spirit of the law and the intent of the law, and what developers should be made to understand is that the law and the rules and the plan was there for a purpose. It was to create a model community.

So my recommendation -- I know it's severe to say they've got to take down the windows and put in appropriate windows and find out the list of materials that actually meet the specification. In the alternative, you can say, well, the rest of the windows that have to go up should meet the specifications.

In the alternative to all of that, I think the board should look at its powers to sanction the developer. There should be impact

fees on the impact -- the adverse impact on the community, and they should be stopped from doing any more of the building unless they pay some fee that is in a poll that can address the impacts in the fee. So I strongly recommend that the board send a message to developers that they really need to follow the rules. They're there for a reason. Thank you very much.

CHAIR WHALEN: Okay. Thank you, Sharon.

Any questions of Ms. Moriwaki? Thank you.

Is there anyone else that wishes to speak that hasn't signed up? Yes.

MS. CALORI: Good afternoon.

CHAIR WHALEN: Good afternoon.

MS. CALORI: Evelyn Calori, and I live at 965 Prospect, and I presented you with a photo for testimony several -- a month ago or so.

I just want to come back and say that I don't object to the development in Kaka'ako. I don't object to the buildings that we have covered in glass. I've not been affected and I don't know if anybody else has been affected by all of the glass on all the different buildings, but I don't object to it. Some of them are really beautiful.

But I do object to the effect on the quality of life from the reflective glare from the style of glass that is being used, and I'm very concerned about the effect it has on public safety for all of our drivers and pedestrians and the many more bicyclists that are going to be on the roads soon. They're all being blinded by this reflective glare, and it should be a big concern at this point.

So I hope that the board's decision is to have the developer remediate with some coating or covering or screen just to protect the public and the people of this island and all the tourists that come and everyone that has the opportunity to live on this island and visit this island. Thank you for your time.

CHAIR WHALEN: Thank you.

Any questions of the witness?

Thank you.

Anyone else wish to speak?

MR. HAMADA: My name is Jack Hamada. I'm a retired citizen.

We are here today for only one thing. That's to approve or disapprove the request of changing of window glasses. It don't matter what kind of glass it is. It can be midnight glass,

sunlight glass, miracle glass. The thing is they want to have that glass changed, but we have one thing -- problem if you approve this. They have already changed the glass. That's one. They have also started to install the glass, and that's all without the okay of the HCDA request or change.

Now, this brings up one problem. If you okay the request, you're going to be stuck with a precedent which you cannot get away from. What they did was after the fact. I mean, they didn't yet requested it -- I'm sorry -- after the fact, and that's very bad because what it does is it presents a precedence to the community and the governor that anybody -- any contractor can come back and, even without a change order, can do anything he wants.

Now, I have been studying this, what you call HCDA, and there's quite a few changes not even recorded, and it is very and highly, I think, unreasonable.

So, Mr. Whalen, can you check with attorney general next to you whether or not what I say about a precedence where anybody can come back and request after the fact?

CHAIR WHALEN: Well, we will be

consulting with the attorney general.

MR. HAMADA: It's a simple question. Yes or no?

CHAIR WHALEN: Well, it's not a simple question, actually.

MR. HAMADA: Why not? That's how you answer a question, yes or no. It's the same like they're requesting a change of glass, yes or no. The problem is their request is after they change the glass. Not only that, they installed the glass now, and the problem is the --

What do you call? I'm trying to figure out.

-- the City and County Department of Planning and Permitting and the mayor are responsible for that.

CHAIR WHALEN: Okay. Is that your testimony or --

MR. HAMADA: Yes. Do you have any questions? This is a very serious problem.

CHAIR WHALEN: I'm asking now if board members have any questions.

MR. HAMADA: Like I say, it doesn't matter what kind of glass it is. They change it and that's the main thing.

CHAIR WHALEN: Okay. Thank you.

Does anyone else wish to testify? The Authority will now consult with its attorneys, and then we'll meet back here and proceed with decision-making. I'd request that we're joined by Deputy Attorneys General Lori Tanigawa and Mike Wong, HCDA staff Deepak Neupane -- and HCDA staff Deepak Neupane and Diane Taira.

The board members will be moving to another conference room and will return to this room to reconvene this hearing. We estimate this consultation will last approximately 45 minutes.

(Whereupon, board members met in private consultation from 2:06 p.m. until 3:56 p.m.)

CHAIR WHALEN: Okay. The hearing is now back in session. The time is 3:56 p.m.

After deliberation, we're still taking this matter under advisement and all the facts. So a decision is -- decision-making is postponed till September 16th, the next meeting, 1:00 p.m.

Okay. That concludes the public hearing. On behalf of HCDA Authority members and staff, thank you for your attendance. The time is now 3:56 p.m.

(Meeting adjourned at 3:56 p.m.)

C E R T I F I C A T E

STATE OF HAWAII)
) ss.
CITY AND COUNTY OF HONOLULU)

I, LAURA SAVO, a Certified Shorthand Reporter in and for the State of Hawaii, do hereby certify:

That the foregoing proceedings were taken down by me in machine shorthand at the time and place herein stated, and was thereafter reduced to typewriting under my supervision;

That the foregoing is a full, true and correct transcript of said proceedings;

I further certify that I am not of counsel or attorney for any of the parties to this case, nor in any way interested in the outcome hereof, and that I am not related to any of the parties hereto.

Dated this 6th day of September, 2015, in Honolulu, Hawaii.

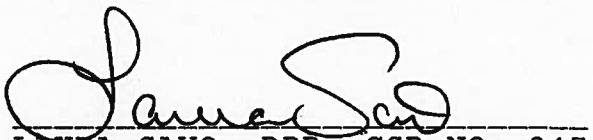

LAURA SAVO, RPR, CSR NO. 347

August 2015 HCDA Newsletter

Aloha,

Community concern continues to grow over the homeless encampments in Kakaako Makai, and the HCDA remains committed to being part of the solution. HCDA staff recently met with the Governor's Leadership Team on Homelessness to identify state-owned parcels that could potentially be used as temporary emergency shelters for homeless families. The governor's team selected the HCDA's maintenance shed fronting Kakaako Waterfront Park as the best option for rapid redevelopment, as it already contains the necessary power and water infrastructure for such a facility. The HCDA continues to be in direct communication with other government agencies and law enforcement to ensure a coordinated response in moving people off the streets and into shelter.

The HCDA is scheduled to make a decision on waiving or suspending the HCDA's "glass rule" for the Symphony Honolulu development on September 2, 2015. HCDA's current rule requires a building's glass to have a minimum of 70 percent visual light transmission (VLT) at the ground level, and 50 percent VLT for all other floors. Visual light transmission is the amount of sunlight that passes through a window, and is not an accurate indicator of reflectivity, or the amount of sunlight that bounces off a window.

The developer of 801 South Street Building A is also requesting the same waiver from HCDA's glass rule, with an initial public hearing scheduled on October 7, 2015. The notice for those public hearings can be viewed online here: http://dbedt.hawaii.gov/hcda/files/2015/08/20150823-801-South-Street-Building-A_610192_1.pdf.

In efforts to increase government transparency, the HCDA has begun posting board packet materials online here: http://dbedt.hawaii.gov/hcda/events/minutes/. Packet materials will be made available online once they are made public at the meeting. Minutes for each meeting will continue to be posted once they are finalized, generally on the next scheduled meeting date.

Please feel free to contact me, should you require any additional information on any of these items. For your convenience, copies of this and previous monthly newsletters and documents are posted on our website, http://dbedt.hawaii.gov/hcda/newsletters/. If you'd like to receive this newsletter with accompanying photos of the various projects and activities, please subscribe here: http://eepurl.com/R7woT.

EXHIBIT 17

See Attached: Updated Project Activity Sheet

Mahalo,

Lindsey Doi
Community Outreach Officer
Hawaii Community Development Authority
(808) 594-0300
Lindsey.doi@hcdaweb.org

KAKAAKO
KALAELOA

BEFORE THE HAWAII COMMUNITY
DEVELOPMENT AUTHORITY

In the Petition of	)	DOCKET NO. CCED KAK 2015-2
	)	
OLIVERMcMILLAN PACIFIC RIM, LLC,	)	AFFIDAVIT OF JON WEIR
	)	
for waiver and suspension of § 15-217-55(k)(2) of the Mauka Area Rules as applied to the Symphony Honolulu Project.	)	

AFFIDAVIT OF JON WEIR

STATE OF CALIFORNIA)
) ss.
COUNTY OF LOS ANGELES)

JON WEIR, being first duly sworn on oath, deposes and says:

1. I have a Bachelor of Science degree in Architectural Technology and am the Principal of JA Weir Associates.

2. Prior to forming JA Weir Associates ("JA Weir"), I worked as a project manager for a national (later international) curtain wall design and installation firm, followed by consulting firms in Chicago, Dallas, Hong Kong, and Los Angeles.

3. JA Weir provides traditional and design consulting, as well as due diligence and forensic review.

4. Unless otherwise indicated, all statements herein are based upon my personal knowledge.

5. I make this second declaration in support of OliverMcMillan Pacific Rim, LLC's ("OMPR") Petition for Waiver and Suspension of § 15-217-55(k)(2) of the Mauka Area Rules as applied to the Symphony Honolulu Project ("Petition").

EXHIBIT "K"

EXHIBIT 18

6. Visible Light Transmittance ("VLT") is best defined as the amount of light that passes through a pane of glass into the interior of a building. A higher VLT translates to a greater pass-through of visible light.

7. Reflectivity is a measurement of the amount of light that is reflected off a pane of glass.

8. There is no correlation between VLT and reflectivity. One measures light passing through a pane of glass whereas the other measures the visible light reflecting off the glass.

9. A high VLT does not in and of itself translate to lower reflectivity, and thus regulating a glazing's VLT does not in turn regulate its reflectivity.

10. Requiring a minimum VLT of 50% does, however, in my opinion needlessly restrict the potential use of very energy efficient glass products.

11. Further, a rule or building code that solely limits a glazing's reflectivity is not advisable because the complexity of reflectivity goes well beyond referencing an exterior reflectance percentage limit including, without limitation, the failure to take into account that there are two types of reflectivity within that percentage.

12. Glass manufacturers do not distinguish between the two types of reflectivity when they publish a glazing's reflectivity percentage.

13. Optimal glass selection happens when all features are considered together to achieve the best balance between light transmittance, reflectivity, and solar heat gain.

14. Considering the above, I believe that the HCDA should grant OMPR's Petition.

FURTHER AFFIANT SAYETH NAUGHT.

DATED: Redondo Beach, California, August 20th, 2015.

JON WEIR (Jon Allen Weir)

This 3 page *Affidavit of Jon Weir* was subscribed and sworn to before me this 20th day of August, 2015.

Signature: Yong B. Yook
Name: Yong Bok Yook
Notary Public, State of California

YONG BOK YOOK
Commission # 2012576
Notary Public - California
Los Angeles County
My Comm. Expires Mar 22, 2017

My Commission expires: Mar 22, 2017

TORTI GALLAS AND PARTNERS

Architects of Sustainable Community

March 12, 2015

Dan Nishikawa
OliverMcMillan Pacific Rim
1003 Bishop Street. #2288
Honolulu, HI

Re: Clarification on Form Based Rules, Kaka'ako, Mauka side, Honolulu, HI

Dear Dan:

Torti Gallas and Partners was retained to provide form based code consulting for the HCDA new Mauka Rules. It has come to my attention, that there might be confusion as to what was intended in the code regarding glazing and this note aims to provide clarification.

As part of that process of developing the code, Torti Gallas provided HCDA staff with general information on glazing. As part of that work, we suggested a standard requiring glazing to have a minimum Visible Light Transmission (VLT) of 50% or greater in order increase the visibility "in and out" of buildings. VLT requirements are typically applied to ground floor conditions, not necessarily for upper floor tower glass. We were not asked evaluate the VLT rule based on (1) energy calculations using Hawaii sun conditions to achieve LEED and energy goals, or (2) the number of glass products that are commercially available.

On a related manner, we should clarify that that opaque glass and window grilles are reasonable items to be part of window wall systems. Their prohibition was meant to apply to the ground floor, only, where storefronts are required.

I trust this explanation provides clarity to your deliberations. If necessary, Torti Gallas is available to assist HCDA with amending the rules based on reasonable and appropriate Hawaii considerations.

Sincerely,

Neal Payton

Neal I. Payton, FAIA, LEED-AP, Principal
Torti Gallas and Partners

Principals
John Francis Torti, FAIA
Thomas M. Gallas, CPA
Robert S. Wallach, AIA
Cheryl A. O'Neill
Charles G. Coleman, III, RA
Daniel Ashtary, AIA
Bruce D. Kennett, AIA
Sherief Eliar, AIA
Robert S. Goodill, AICP
Neal I. Payton, FAIA
Lawrence V. Antoine, AIA, AICP
Thomas E. Danco, AIA
Erik J. Aulestia, AICP
Troy McGhee, AICP
Brian E. O'Looney, AIA
Sarah Alexander, AIA
Andrew P. Czajkowski, AIA
Scott Welch, RA

Emeritus
Tunca Iskir
Sylvia S. Munero

Torti Gallas and Partners, Inc. 523 West 6TH Street, Suite 212 Los Angeles, California 90014 213.607.0070 213.607.0077 fax
Silver Spring, Maryland | Los Angeles, California | Istanbul, Turkey | www.tortigallas.com

EXHIBIT 19

HAWAII COMMUNITY DEVELOPMENT AUTHORITY

STATE OF HAWAII

In re:

The Application of

OLIVERMcMILLAN PACIFIC RIM, LLC,

Applicant,

To amend Development Permit No. KAK 12-075 by waiving or permanently suspending the requirement of HAR §15-217-55(k)(2) for the Symphony Honolulu project and that such waiver or permanent suspension be retroactive from April 5, 2015.

TRANSCRIPT OF PROCEEDINGS

Wednesday, September 16, 2015

Taken at 547 Queen Street, Second Floor
Honolulu, Hawaii 96813
commencing at 1:12 p.m.

Reported by: LAURA SAVO, CSR No. 347

EXHIBIT 20

A P E A R A N C E S

John Whalen, Chairperson

Steven Scott, Vice Chairperson

Aedward Los Banos, Acting Executive Director

Deepak Neupane, Dir. of Planning and Development

Michael Wong, Deputy Attorney General

BOARD MEMBERS:

Tracy Ban

Beau Bassett

William Oh

Jason Okuhama

David Rodriguez

Mary Pat Waterhouse

ALSO PRESENT:

For Petitioner OliverMcMillan Pacific Rim, LLC:

D. SCOTT MacKINNON, ESQ.
SCOT MATAYOSHI, ESQ.
JESSICA M. WAN, ESQ.
McCorriston Miller Mukai MacKinnon, LLP
500 Ala Moana Boulevard, Suite 5-400
Honolulu, Hawaii 96813

Dan Nishikawa, President
OliverMcMillan Pacific Rim, LLC

For Respondent HCDA:

DIANE TAIRA, ESQ.
Deputy Attorney General
425 Queen Street
Honolulu, Hawaii 96813

I N D E X

	PAGE
Call to Order	4
Executive Session	6
Decision and Order	6
Adjournment	18

Honolulu, Hawaii September 16, 2015, 1:12 p.m.

-o0o-

CHAIR WHALEN: So I'd like to call to order the September 16th public hearing of the Hawaii Community Development Authority. The time is now 1:12 p.m. Thank you for your interest in Kaka'ako today and your attendance.

My name is John Whalen, chair of the Authority. Let the record reflect that the following Kaka'ako members are present: Tracy Ban, Jason Okuhama, Steven Scott, Beau Bassett, Mary Pat Waterhouse and William Oh.

The Chair acknowledges the presence of the applicant OliverMcMillan Pacific Rim, LLC, and its counsel.

It's my understanding, in consultation with the attorney general, that the board is currently in deliberations regarding the petition filed by OliverMcMillan Pacific Rim. The taking of evidence ended at the last meeting on September 2nd. As the board is in continued deliberations, no further testimony or evidence can be taken by the board today.

Is that correct?

MR. WONG: Yes.

CHAIR WHALEN: So we are in decision-making.

Petitioner OliverMcMillan Pacific Rim, LLC, requests that HCDA amend Development Permit No. KAK 12-075 by waiving or permanently suspending the requirement of Hawaii Administrative Rules 15-217-55(k)2 for the Symphony Honolulu project and that such waiver or permanent suspension be retroactive from April 1st, 2015.

After some deliberation at the last meeting, the board decided to continue deliberation until today. The Authority will be convening in another room to consult privately with the attorneys to continue its decision-making. The Authority will now consult with its attorneys, and then we'll meet back here and proceed with decision-making. I'd request that we're joined by deputies attorney general Mike Wong and Diane Taira, HCDA staff Aedward Los Banos and Deepak Neupane and Tommilyn Soares.

The board members will be moving to another conference room and return to this room to reconvene this hearing. We estimate that the private consultation will last approximately 45 minutes. The time is now 1:15, which means that

approximately 2:00 p.m., we hope to be back here.

So I do need to hear a motion to convene in executive session.

VICE CHAIR SCOTT: So move.

MEMBER WATERHOUSE: Second.

CHAIR WHALEN: All those in favor, say aye.

(Board members voted simultaneously in the affirmative.)

CHAIR WHALEN: Motion passes unanimously. So we will return approximately 2:00 p.m.

(Whereupon, the board met in Executive Session from 1:15 p.m. until 2:19 p.m.)

CHAIR WHALEN: The hearing is now back in session. The time is 2:19 p.m.

Is there a motion to adopt an order -- Decision and Order?

VICE CHAIR SCOTT: Yes.

CHAIR WHALEN: Would you like to read it?

VICE CHAIR SCOTT: Based upon the foregoing Findings of Fact and Conclusions of Law and the records and files herein, HCDA grants the petition subject to the following terms and conditions:

The OMPR Petition is granted with respect

to its request for a waiver of HAR 15-217-55(k)(2) as to the project with such waiver retroactive as of and from April 5th, 2015.

OMPR is assessed the maximum fine permitted under HAR 15-219-101(a) and shall pay a fine in the amount of $2,000 for failing to correct the violation by the date specified in the Revised Notice of Violation.

Pursuant to HAR 15-219-01 -- 102, OMPR shall reimburse HCDA for its third-party consultant costs incurred in retaining Douglas Engineering Pacific, Inc., to provide consulting services regarding the instant docket in the amount of $24,000.

Section "V" or Section VII.D of the Development Permit is hereby deleted in its entirety and shall be replaced with the following:

D, comply with all applicable requirements of Subchapter 4, Area-Wide Standards, of the Mauka Area Rules, except for HAR 15-217-55(k)(2).

OMPR has further agreed to further increase its public facilities dedication fee by an additional $1 million. In recognition of this increase, Section IV of the Development Permit is

hereby deleted in its entirety and shall be replaced with the following:

Public Facilities Dedication Fee: Based on the information provided on the Development Permit application, land requirement for public facilities dedication is determined to be 17,415 square feet. The Applicant's request to pay cash-in-lieu fee in place of dedicating land has been approved. The base cash-in-lieu fee for public facilities dedication is calculated based on the land value of $150 per square foot resulting in a public facilities dedication fee in the amount of $2,612,250 based on the currently projected commercial floor area and market residential floor area.

An additional public facilities dedication fee in the amount of $1 million has been agreed with the Applicant to mitigate any and all issues concerning the project's selected glazing and for the impairment of HCDA's planning and coordination of the KCDD caused by Applicant's unwarranted delay in availing itself of the proper process and procedure to address the issues raided with HAR 15-217-55(k)(2). This results in a total cash-in-lieu fee for public facilities dedication

in the amount of $3,612,250. The actual base cash-in-lieu fee for public facilities dedication shall be subject to redetermination at the time of substantial completion of construction of the project on the basis of the final measured commercial and market residential floor area of the development. The mitigation portion of the public facilities dedication fee shall not be subject to any adjustment.

The payment of the public facilities dedication fee shall be prior to the issuance of the initial Certificate of Occupancy of the project and secured by the Applicant with a financial guaranty bond from a surety company authorized to do business in Hawaii, an acceptable construction set-aside letter, or other acceptable means to HCDA prior to the issuance of the initial building permit.

Except as provided herein, all other terms and conditions of the Development Permit shall remain in full force and effect.

Seven, OMPR agrees to waive its rights under HRS 206E-5.6(h), specifically that OMPR has 30 days after receipt of a certified copy of this order within which to seek judicial review pursuant

to HRS 91-14.

It is so stipulated and ordered.

CHAIR WHALEN: That's the motion. Is there a second to that motion?

MEMBER BASSETT: Second.

CHAIR WHALEN: Second, Beau Bassett.

Any discussion on the motion?

I'd like to make a statement. Early in this hearing, I commented that in my experience in writing, administering and enforcing development codes, I've learned sometimes, occasionally the hard way, that certain elements are needed for effective regulations. To be specific in the instance, a statement of purpose and intent that is linked to public health and safety and does not conflict with other objectives and purposes of the code, and development standards that clearly and directly implement that purpose and that are measurable, enforceable and unlikely to create unintended consequences. There also has to be a clear process for reviewing plans prior to the issuance of construction permits to ensure compliance.

Although HCDA's regulations do contain a purpose and intents section that seeks to avoid

window wall buildings with highly reflective materials, they do not include a glass standard that reduces solar reflectivity and heat island effect on the exterior of a building. Instead, the standard in this section applies to visible light transmission, which the technical specialists in glazing products that we retained and informed us in his testimony is not correlated with the reduction of reflectivity and heat island effect.

Further, the architectural consultant who advised HCDA on the preparation of the 2011 rules stated that the VLT was meant to apply only to ground floor windows where storefronts are required, not to upper floors in the tower in this consultant's March 2015 letter.

So to repeat, HCDA's rules do not have an enforceable standard to limit the solar reflectivity of glass, and neither does the city and county of Honolulu for that matter.

Our technical consultant testified that although window products are available to meet both VLT and the energy saving LEED rating required of HCDA rules, both he and the Appellant's technical consultant admitted that a high VLT can impair the efficiency of the solar heat gain coefficient of

glass or its energy savings properties.

So HCDA cannot legally require the developer to replace glass with a product that has less reflective properties because we don't have a standard in the rules to enforce. Unfortunately, and similarly, we can't order that a film be placed on the glass to reduce the reflectivity, which itself would be a difficult proposition from a logistics and durability standpoint.

We had an offer from the developer to -- which we can't require, but it was an offer submitted by the developer to increase the public facility dedication fee. Well, it's my suggestion that that additional money be used to provide a substantial amount of landscaping in the district, on the streets and the parks, which at least would be an appropriate form of restitution because it focuses on the public realm and would reduce the heat island effect. And the contribution of landscaping, particularly large canopy trees, to reduce the heat island effect in urban settings is by no means trivial. And we all know this from our own experience walking down a sidewalk on a hot day, the ambient temperature is a lot cooler. According to research compiled by Environmental

Protection Agency, shaded surfaces may be 20 to 45 degrees cooler than unshaded surfaces. Evapotranspiration alone or in combination with shading can help reduce peak summer temperatures by 2 percent to 9 percent. This at least helps offset the heat island effect for a window wall building on the public realm.

Now, going forward, it's also my suggestion that we look at an effective regulation to reduce solar reflectivity and heat island effect. We can either amend -- going for what I think is the least effective to the most effective approach, we can amend the HCDA Glass Rule to provide a reflectivity standard which it currently lacks, and that would at least give us something to enforce. But its applicability would be quite limited because most of the planned future towers in Kaka'ako are located in the Master Plan areas controlled by the two major landowners that are exempt from the 2011 rules or any amendments to them.

A second approach, we can -- these are not mutually exclusive. We can exercise design review for all development permits for new towers throughout the district and require specific

performance standards to reduce solar reflection and the heat island effect on a project-by-project basis. This may result in towers that reduce window surface and incorporate more shading and shadowing features on a face of a tower rather than rely exclusively on the inherent properties of the glass product.

And the third and I think, actually, most effective, because it would have broader applicability, is to encourage, with the assistance of the state energy office, an amendment to Honolulu's building code that includes a glass reflectance standard as part of incorporating the 2015 International Energy Conservation Code, the IECC. The 2015 IECC for the first time, I'm told, will have standards appropriate to the tropical climate such as ours.

As mentioned earlier, the city and county of Honolulu also lacks a standard for regulating the reflective properties of glass in high-rise buildings. Kaka'ako's energy conservation standards including glass reflectance should be the same as those for the rest of Honolulu. Climate doesn't change once you cross the HCDA boundary. By making this standard part of the building code,

all new buildings in the city and county of Honolulu would meet the same energy requirements and make enforcement of those requirements more uniform and effective.

Are there any other comments?

VICE CHAIR SCOTT: I have a comment.

I think it's essential that this board has a little more communication with developers, not just OMPR, but with all developers in Kaka'ako. That includes Kamehameha Schools. That includes Howard Hughes and that includes anyone else. That if there are discrepancies, if there are questions, that you come to the board prior to making decisions and consult with us.

The biggest problem that I see coming on this board is that in the past, too many things have been done. Ask forgiveness later, but don't ask for permission, and that is not right. And for my own part, I will say that I think that it's very, very important that developers be given notice that it is absolutely essential that you come and you work with the board, you work with the executive director, and you work with the HCDA staff to make sure the rules are followed, make sure that the rules are what they seem to be. You

can't just take, pick and choose that you want to emphasize energy efficiency and avoid other issues.

So I just think in the future, take notice that I think it's important that developers heed that advice.

CHAIR WHALEN: For the record, Mr. Scott, would you be willing to amend your motion to include adoption of the stipulated Findings of Fact and Conclusions of Law as well as the Decision and Order?

VICE CHAIR SCOTT: Yes.

CHAIR WHALEN: Seconder?

MEMBER BASSETT: So seconded.

CHAIR WHALEN: Any other comments from the board before we call for a roll call vote?

MEMBER WATERHOUSE: May I?

CHAIR WHALEN: Yes, Pat.

MEMBER WATERHOUSE: I think it's important to note and also reiterate that I definitely had some concerns about our rules, and I hope that the settlement funds will be used for trees, shrubbery, parks and other things that we need to help mitigate the situation that is at hand. Thank you.

CHAIR WHALEN: Thank you. Any other

comments from the board? Are we ready for a roll call vote?

ACTING EXECUTIVE DIRECTOR: Member Okuhama?

MEMBER OKUHAMA: Yes.

ACTING EXECUTIVE DIRECTOR: Member Scott?

VICE CHAIR SCOTT: Yes.

ACTING EXECUTIVE DIRECTOR: Member Bassett?

MEMBER BASSETT: Yes.

ACTING EXECUTIVE DIRECTOR: Member Waterhouse?

MEMBER WATERHOUSE: Yes.

ACTING EXECUTIVE DIRECTOR: Member Ban?

MEMBER BAN: No.

ACTING EXECUTIVE DIRECTOR: Member Oh?

MEMBER OH: Yes.

ACTING EXECUTIVE DIRECTOR: Chair Whalen?

CHAIR WHALEN: Yes.

ACTING EXECUTIVE DIRECTOR: The Decision and Order passes with six votes for the Decision and Order, one against and two excused.

CHAIR WHALEN: Counsel, you have the option of electing to write and file written comments and exceptions to the Authority's Proposed

Order, or you may choose to waive your right to file comments and exceptions and accept the decision as the final. How do you intend to proceed?

MR. MacKINNON: Based on the stipulated Findings of Fact, Conclusions of Law and Decision and Order, we would waive any further exceptions.

CHAIR WHALEN: Okay. So because OliverMcMillan Pacific Rim has elected to waive its right to file comments and exceptions and will instead accept the Authority's Proposed Decision and Order as final, I would ask staff to finalize the Decision and Order for signature by members.

On behalf of HCDA Authority members and its staff, I thank you for your attendance. This was a very, obviously, long and difficult hearing for us. The time is now 2:36 p.m.

(Hearing adjourned at 2:36 p.m.)

C E R T I F I C A T E

STATE OF HAWAII)
) ss.
CITY AND COUNTY OF HONOLULU)

I, LAURA SAVO, a Certified Shorthand Reporter in and for the State of Hawaii, do hereby certify:

That the foregoing proceedings were taken down by me in machine shorthand at the time and place herein stated, and was thereafter reduced to typewriting under my supervision;

That the foregoing is a full, true and correct transcript of said proceedings;

I further certify that I am not of counsel or attorney for any of the parties to this case, nor in any way interested in the outcome hereof, and that I am not related to any of the parties hereto.

Dated this 20th day of September, 2015, in Honolulu, Hawaii.

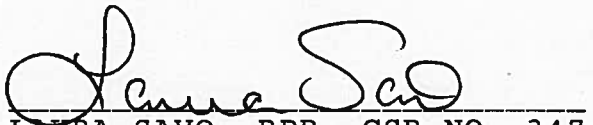

LAURA SAVO, RPR, CSR NO. 347

BEFORE THE HAWAII COMMUNITY DEVELOPMENT AUTHORITY

STATE OF HAWAI'I

In re Downtown Capital LLC's Petition for Waiver or Suspension of the Visible Light Transmittance Standard in HAR § 15-217-55(k)(2) for the Project under Development Permit No. KAK 12-109 for 801 South Street (State Tax Map Key No. (1) 2-1-047-003) Issued by Hawaii Community Development Authority on December 5, 2012	DEVELOPMENT PERMIT NO. KAK 12-109 **DECLARATION OF RYAN HARADA**

DECLARATION OF RYAN HARADA

I, RYAN HARADA, declare of my own personal knowledge as follows:

1. I am a principal of Downtown Capital, LLC ("**Downtown Capital**").

2. Downtown Capital is the owner and developer of the residential workforce housing project at 801 South Street (the "**Project**").

3. Hawai'i Community Development Authority ("**HCDA**") approved the Development Permit for the Project in 2012. The Project is a workforce housing project with 635 residential units. In the course of building the Project, Downtown Capital received grading, foundation and building permits from the City and County of Honolulu. HCDA reviewed and approved each permit before it was issued.

4. The Project is not a curtain-wall building with glass covering the entire face of the exterior. Sixty-seven percent of the exterior is concrete and similar solid surfaces. Twenty percent of the surface comprises lanai doors, all of which are set

EXHIBIT 21

back four feet from the building face with a roof overhang. The remaining 13 percent of the exterior is glass windows. All of the windows and doors may be opened and closed. The visual light transmittance ("**VLT**") for the glazing used in the windows located above the first floor of the Project is 35 percent. Neither Downtown Capital nor its consultants identified the VLT standard when the Project was designed and built. HCDA did not ask Downtown Capital about the VLT of the glazing installed on the Project.

5. HCDA first raised the discrepancy between its interpretation of the VLT standard and the installed window glazing around the time that HCDA reviewed the certificate of occupancy for the Project. HCDA eventually approved the certificate with the understanding that Downtown Capital would petition for a waiver or suspension of the VLT standard.

6. The sales of the units in the Project have closed. Owners and residents have begun moving into the units. To replace the windows and lanai doors with glass meeting the VLT standard would be cost prohibitive, disrupt 635 units and achieve no public benefit.

7. I am familiar with the proceedings in the case of *In re Petition of OliverMcMillan Pacific Rim, LLC*, Docket No. CCED KAK 2015-2 ("***OMPR***").

8. Attached hereto as Exhibit 1 is a true and correct copy of an excerpt of the transcript of proceedings on July 22, 2015, in *OMPR*. Certain pages have been annotated to state the name of the person testifying.

9. Attached hereto as Exhibit 2 is a true and correct copy of an excerpt of the building permit for the Project.

10. Attached hereto as Exhibit 3 is a true and correct copy of the Hawaii Highrise - Glazing Performance Data dated March 12, 2015, filed with HCDA on April 9, 2015, by Petitioner in the *OMPR* case.

11. Attached hereto as Exhibit 4 is a true and correct copy of the calculations of the VLT of the windows installed on the Project.

12. Attached hereto as Exhibit 5 is a true and correct copy of the Temporary Certificate of Occupancy dated April 10, 2015, for the Project.

13. Attached hereto as Exhibit 6 is a true and correct copy of an excerpt of the Glazing and Energy Analysis Report Relating to Visual Light Transmittance (VLT) and Leadership in Energy and Environmental Design (LEED) Requirements of the Mauka Area Rules prepared by Douglas Engineering Pacific, Inc. dated July 20, 2015, for the *OMPR* case.

14. Attached hereto as Exhibit 7 is a true and correct copy of the Staff Report dated July 22, 2015, for the *OMPR* case.

15. Attached hereto as Exhibit 8 is a true and correct copy of the Affidavit of Jon Weir submitted in the *OMPR* case.

I declare under penalty of perjury that the foregoing is true and correct.

DATED: Honolulu, Hawai'i, August 5, 2015.

RYAN HARADA

ASSOCIATION OF APARTMENT OWNERS
OF
801 SOUTH ST

Resolution Regarding Waiver Petition
Adopted at a Meeting of the Board of Directors
held September 28, 2015

WHEREAS, ASSOCIATION OF APARTMENT OWNERS OF 801 SOUTH ST (the "**Association**") is an unincorporated association of the apartment owners of the workforce housing project located at 801 South Street, Building A (the "**Building**"), Honolulu, Hawai'i 96813 (the "**Project**"), which was permitted by the Hawaii Community Development Authority ("**HCDA**") under Permit No. KAK 12-109;

WHEREAS, the Project's developer, Downtown Capital LLC ("**Downtown Capital**"), filed with HCDA on August 5, 2015, a Petition for Waiver or Suspension of the Visible Light Transmittance ("**VLT**") Standard in Hawai'i Administrative Rules § 15-217-55(k)(2) (the "**Waiver Petition**") as it applies to the Project;

WHEREAS, HCDA has asserted that applying VLT standard to the Building would require the removal and replacement of all of the windows located above the ground floor in the Building; and

WHEREAS, the Association's Board of Directors has determined that the waiver or suspension contemplated by the Waiver Petition is in the best interests of the Association and its members; NOW, THEREFORE, BE IT

RESOLVED, the Association hereby respectfully requests that HCDA grant the Waiver Petition for the reasons set forth in the Waiver Petition and because:

1. Residents do not want people outside of the Building to be able to look into their units. Any increase in views into the units would create privacy concerns for residents.

2. The Association has not received any complaint from any owner or resident about being unable to see out of the Building.

3. The Association has not received any complaint regarding the reflectance of the glass used on the Building. The Association does not perceive the window glass to be highly reflective.

4. The Association has not received any complaint that the window glass creates a heat island around the Building. The Association does not perceive the window glass to create a heat island around the Building.

EXHIBIT 22

5. Because the lanai doors and the windows are operable, residents may open their doors and windows to adjust the amount of light coming in to the units and to keep the units cool using less air conditioning and electricity.

7. Over 1,000 residents have already moved into the Building. It would be unfairly prejudicial, highly disruptive and impracticable to require that all glass windows and lanai doors be removed and replaced in the Building's 635 units.

ADOPTED – ASSOCIATION OF APARTMENT OWNERS OF 801 SOUTH ST

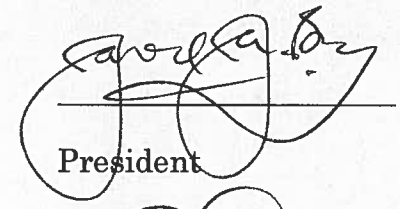

President

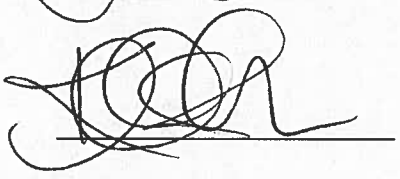

Secretary

BEFORE THE HAWAII COMMUNITY DEVELOPMENT AUTHORITY

STATE OF HAWAI'I

In re Downtown Capital LLC's Petition for Waiver or Suspension of the Visible Light Transmittance Standard in HAR § 15-217-55(k)(2) for the Project under Development Permit No. KAK 12-109 for 801 South Street (State Tax Map Key No. (1) 2-1-047-003) Issued by Hawaii Community Development Authority on December 5, 2012	DEVELOPMENT PERMIT NO. KAK 12-109 **DECLARATION OF SCOTT CODY**

DECLARATION OF SCOTT CODY

I, SCOTT CODY, declare of my own personal knowledge as follows:

1. I am a Preconstruction Project Manager with Hawaiian Dredging Construction Company, Inc. ("**HDCC**"), and I have been with HDCC since February 2013.

2. I earned my Bachelors of Science from Rochester Institute of Technology, majoring in Industrial Engineering, Construction Management, and Economics. I earned my Masters of Business Administration from Rochester Institute of Technology - Saunders College of Business, with a Management and Leadership Concentration.

3. Prior to my current position, I worked as a Project Engineer for LeChase Construction from June 2010 to January 2013 and as a Construction Engineer for HDCC from March 2008 to September 2009.

EXHIBIT 23

4. Since July 2008, I have held a LEED Accredited Professional Certification from the U.S. Green Building Council.

5. HDCC is the General Contractor for the residential workforce housing project at 801 South Street, Building A (the "**Project**"). I worked on the Project in my capacity as Preconstruction Project Manager with HDCC.

6. I make this declaration in support of Downtown Capital LLC's ("**Downtown Capital**") Petition for Waiver or Suspension of the Visible Light Transmittance ("**VLT**") Standard in HAR § 15-217-55(k)(2), filed August 5, 2015 (the "**Waiver Petition**"), with the Hawaii Community Development Authority ("**HCDA**").

7. The Project is not a glass-wall building with glass covering the entire face of the exterior. Approximately sixty-seven percent of the exterior is concrete and similar solid surfaces. Approximately twenty percent of the surface comprises lanai doors, all of which are set back four feet from the building face with an overhang. The remaining 13 percent (approximate) of the exterior is windows. All of the window and door assemblies have operable sections that can be opened and closed.

8. In my experience, the glazing or glass installed in the Project is not highly reflective or mirrored. Based on the manufacturer's performance data, it is my understanding that the reflectivity of the glass is 33 percent and is not considered highly reflective. A lay person standing outside generally would not be able to tell a noticeable difference between a building with glass having reflectivity of 20 percent versus 35 percent.

9. Considering that a majority of the building is composed of concrete and other solid surfaces, the presence of recessed lanai doors and overhangs and the use of glazing that is not highly reflective, the glass poses no risk of creating a "heat island" effect on the surrounding areas.

10. To my knowledge, VLT is defined as the amount of visible light that passes through a fenestration (any light-transmitting section of a wall or roof). The amount of light transmitted through a fenestration depends on the type of glass and whether and to what extent the assembly can be opened.

11. Based on HDCC's calculations, when all of the window and door assemblies are open, the VLT is 50.50 percent. HDCC's calculations supporting this calculation are set forth in the attachments to the March 23, 2015 letter from Downtown Capital to Anthony Ching, which is being submitted as Exhibit 4. As stated in those attachments:

a. The Glass Association of North America defines a "window" as "[a]n opening constructed in a wall or roof and functioning to admit light or air to an enclosure, usually framed and spanned with glass mounted to permit opening and closing." Glass Association of North America Glazing Manual, *available at* http://www.glasswebsite.com/techcenter/Glossary.

b. The optimal way to allow light into a space is by providing windows that have the ability to be opened. This operable function gives variability to the amount of daylight and allows the user to adjust the light to their individual preferences.

c. Since all openings that are constructed in the exterior wall of a project are windows, the Project's windows calculations include what are commonly referred to in Hawaii as "lanai doors."

d. The VLT calculation for the Project windows includes: (1) the VLT of the window glazing; (2) the VLT of the opening created by sliding the lite; and (3) the dimensions of the window in the open position.

e. With respect to the sliding lanai doors, there are three lites—two fixed and one operable. When the operable lite is in the open position, it decreases the VLT of the lite that is covered. HDCC calculated the VLT of the sliding doors as follows (Ex. 4, VLT calculations at 2):

Term Definitions:
W_1= Width of first fixed lite
W_O= Width of operable lite
W_2= Width of second fixed lite
H=Height of window
T_{vis}= Visible light transmittance of window glazing
T_O= Visible light transmittance of opening with no glazing
$T_{Sliding}$=Visible light transmission of effective sliding window
$A_{Sliding}$=Total effective area of sliding window

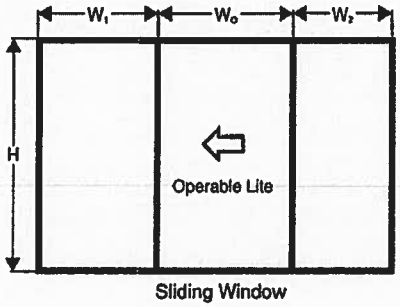

Sliding Window

Computation:

$$((W_1 + W_O + W_2) * H) = A_{Sliding}$$

$$\frac{((W_1 * H) * (T_{vis} * T_{vis})) + ((W_O * H) * T_O) + ((W_2 * H) * T_{vis})}{A_{Sliding}} = T_{Sliding}$$

f. With respect to the awning windows, there are two types of lites—fixed and operable. The components that are factored into the calculation are the VLT of the window glazing and the VLT of the opening created by the operable lite. HDCC calculated the VLT of the awning windows as follows (Ex. 4, VLT calculations at 3)):

Term Definition:
W_A= Width of awning window
H=Height of window
O_T=Opening size at top of lite when window is open
O_B=Opening size at bottom of lite when window is open
T_{vis}= Visible light transmittance of window glazing
T_o= Visible light transmittance of opening with no glazing
T_{Awning}=Visible light transmission of effective awning window surface
A_{Awning}=Total effective area of awning window
$T_{Windows}$=Visible light transmission of windows

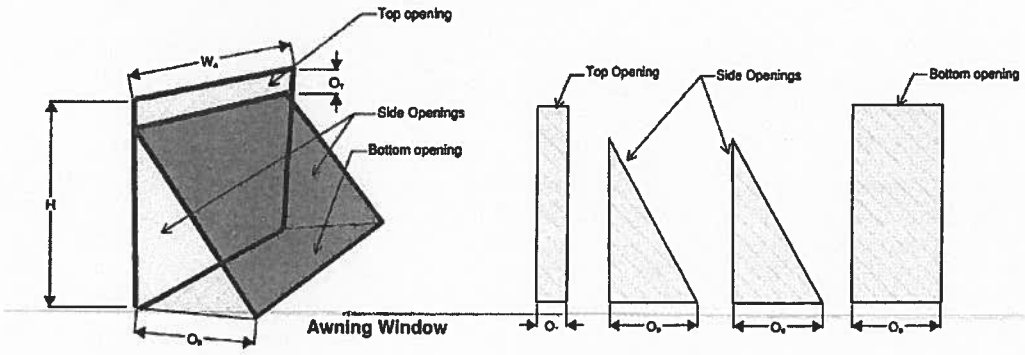

Computations:

$$(W_A*H)+(W_A*O_T)+(W_A*O_B)+((H*O_B)/2)+((H*O_B)/2) = A_{Awning}$$

$$\frac{((W_A*H)*T_{vis})+((W_A*O_T)*T_O)+((W_A*O_B)*T_O)+(((H*O_B)/2)*T_O)+(((H*O_B)/2)*T_O)}{A_{Awning}} = T_{Awning}$$

g. The total VLT of the windows for the project is calculated by taking the combined VLT of both awning windows and sliding doors. The calculation is as follows (Ex. 4, VLT calculations at 4):

Term Definition:
$A_{Sliding}$=Total effective area of sliding window
A_{Awning}=Total effective area of awning window
$T_{Sliding}$=Visible light transmission of effective sliding window
T_{Awning}=Visible light transmission of effective awning window surface
$T_{Windows}$=Visible light transmission of windows

Computation:

$$\frac{(T_{Sliding} * A_{Sliding}) + (T_{Awning} * A_{Awning})}{(A_{Sliding} + A_{Awning})} = T_{Windows}$$

h. HDCC used the foregoing equations in calculating the total VLT for the thousands of awning windows and sliding lanai doors. The total VLT for the windows in the Project is 50.50 percent. *See* Ex. 4, letter dated March 17, 2015 from HDCC to Marshall Hung at 1.

12. A reduction in the VLT of glazing or glass from 50 percent to 35 percent would not perceptibly alter a person's ability to see through glass.

I declare under penalty of perjury that the foregoing is true and correct.

DATED: Honolulu, Hawai'i, September 29, 2015.

SCOTT CODY

BEFORE THE HAWAII COMMUNITY DEVELOPMENT AUTHORITY

STATE OF HAWAI'I

In re Downtown Capital LLC's Petition for Waiver or Suspension of the Visible Light Transmittance Standard in HAR § 15-217-55(k)(2) for the Project under Development Permit No. KAK 12-109 for 801 South Street (State Tax Map Key No. (1) 2-1-047-003) Issued by Hawaii Community Development Authority on December 5, 2012	DEVELOPMENT PERMIT NO. KAK 12-109 **DECLARATION OF MICHAEL BAULIG**

DECLARATION OF MICHAEL BAULIG

I, MICHAEL BAULIG, declare of my own personal knowledge as follows:

1. I am a Project Manager and Senior Estimator with Kalu Glass Company, Inc. ("**Kalu**"), and I have been with Kalu since 1997.

2. I have worked in the window and glass industry for 40 years.

3. Kalu is a subcontractor for the residential workforce housing project at 801 South Street, Building A (the "**Project**"). Kalu installed the windows on the Project. I worked on the Project in my capacity as Senior Estimator with Kalu.

4. I make this declaration in support of Downtown Capital LLC's ("**Downtown Capital**") Petition for Waiver or Suspension of the Visible Light Transmittance ("**VLT**") Standard in HAR § 15-217-55(k)(2), filed August 5, 2015 (the "**Waiver Petition**"), with the Hawaii Community Development Authority ("**HCDA**").

EXHIBIT 24

5. The Project is not a glass-wall building with glass covering the entire face of the exterior. Approximately sixty-seven percent of the exterior is concrete and similar solid surfaces. Approximately twenty percent of the surface comprises lanai doors, all of which are set back four feet from the building face with an overhang. The remaining 13 percent (approximate) of the exterior is windows. All of the window and door assemblies have operable sections that can be opened and closed.

6. In my experience, the glazing or glass installed in Project is not highly reflective or mirrored. Based on the manufacturer's performance data, it is my understanding that the reflectivity of the glass is 33 percent and is not considered highly reflective. A lay person standing outside generally would not be able to tell a noticeable difference between a building with glass having reflectivity of 20 percent versus 35 percent.

7. Considering that a majority of the building is composed of concrete and other solid surfaces, the presence of recessed lanai doors and overhangs and the use of glazing that is not highly reflective, the glass poses no risk of creating a "heat island" effect on the surrounding areas.

8. To my knowledge, VLT is defined as the amount of visible light that passes through a fenestration (any light-transmitting section of a wall or roof). The amount of light transmitted through a fenestration depends on the type of glass and whether and to what extent the assembly can be opened.

9. A reduction in the VLT of glazing or glass from 50 percent to 35 percent would not perceptibly alter a person's ability to see through glass.

I declare under penalty of perjury that the foregoing is true and correct.

DATED: Honolulu, Hawai'i, September 29, 2015.

MICHAEL BAULIG


EXHIBIT 25





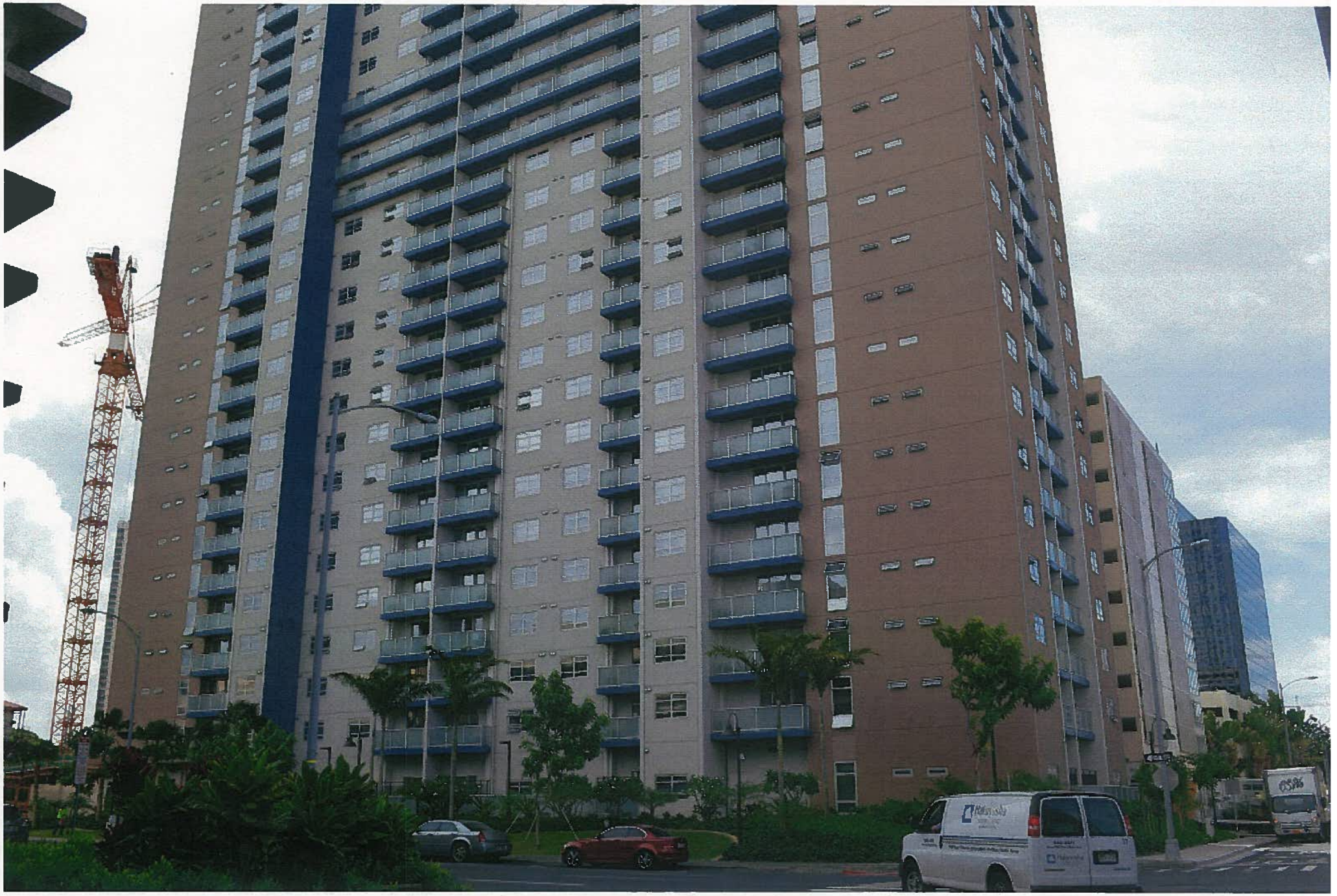



BEFORE THE HAWAII COMMUNITY DEVELOPMENT AUTHORITY

STATE OF HAWAI'I

In re Downtown Capital LLC's Petition for Waiver or Suspension of the Visible Light Transmittance Standard in HAR § 15-217-55(k)(2) for the Project under Development Permit No. KAK 12-109 for 801 South Street (State Tax Map Key No. (1) 2-1-047-003) Issued by Hawaii Community Development Authority on December 5, 2012	DEVELOPMENT PERMIT NO. KAK 12-109 **CERTIFICATE OF SERVICE**

CERTIFICATE OF SERVICE

I hereby certify that on this date I submitted 30 copies of the foregoing document with the Hawaii Community Development Authority.

DATED: Honolulu, Hawai'i, September 30, 2015.

CALVERT G. CHIPCHASE
CHRISTOPHER T. GOODIN

Attorneys for Petitioner
DOWNTOWN CAPITAL LLC