HAWAII COMMUNITY DEVELOPMENT AUTHORITY

STATE OF HAWAII

KAKA'AKO COMMUNITY DEVELOPMENT DISTRICT
IMPROVEMENT DISTRICT 9
ILALO STREET IMPROVEMENTS

KAKAAKO I.D. 9- ILALO STREET IMPROVEMENTS

Prepared by:

R. M. TOWILL CORPORATION
SINCE 1930
Planning • Engineering • Environmental Services • Photogrammetry • Surveying • Construction Management

RECORD DRAWING TRACINGS
Certified By: K. J. Chung Date: 10-31-03
Contractor
(include name and company)
Submitted By: Date: 10/31/03
(Sign)
Approved By: Date:

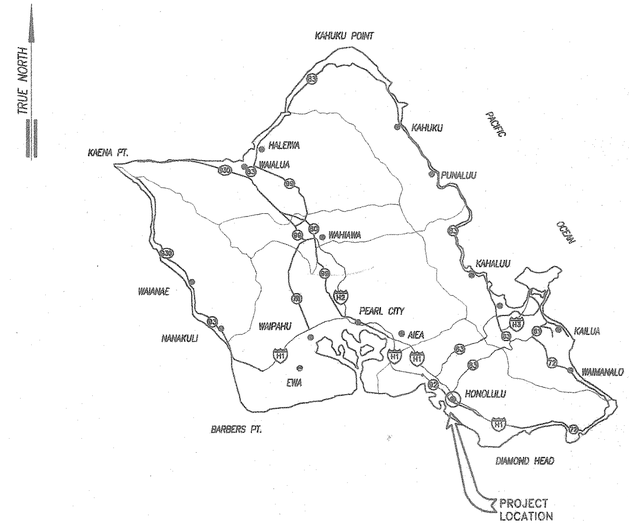

VICINITY MAP

5 0 5 10
SCALE IN MILES



LOCATION MAP

NOT TO SCALE

TMK: 2-1-15, 2-1-59 & 2-1-60

APPROVED:

EXECUTIVE DIRECTOR, HAWAII COMMUNITY DEVELOPMENT AUTHORITY STATE OF HAWAII	8-3-00 DATE
CHIEF, ENVIRONMENTAL MANAGEMENT DIVISION DEPARTMENT OF HEALTH, STATE OF HAWAII	8-18-00 DATE
for DIRECTOR, DEPARTMENT OF PLANNING AND PERMITTING	8/9/00 DATE
for MANAGER AND CHIEF ENGINEER, BWS	7-14-00 DATE

FILE	POCKET	FOLDER	NO.

INDEX OF DRAWINGS

SHEET	DWG. NO.	DESCRIPTION
		GENERAL
1	G-1	TITLE SHEET
2	G-2	INDEX OF DRAWINGS
3	G-3	CONSTRUCTION NOTES-1
4	G-4	CONSTRUCTION NOTES-2
5	G-5	CONSTRUCTION NOTES-3
6	G-6	GENERAL SITE PLAN-1
7	G-7	GENERAL SITE PLAN-2
		CIVIL
8	C-1	DRAINAGE PLAN-1
9	C-2	DRAINAGE PLAN-2
10	C-3	EROSION CONTROL PLAN
11	C-4	DEMOLITION PLAN-1
12	C-5	DEMOLITION PLAN-2
13	C-6	DEMOLITION PLAN-3
14	C-7	DEMOLITION PLAN-4
15	C-8	TYPICAL ROAD SECTIONS
16	C-9	ILALO STREET PLAN & PROFILE-1
17	C-10	ILALO STREET PLAN & PROFILE-2
18	C-11	ILALO STREET PLAN & PROFILE-3
19	C-12	ILALO STREET PLAN & PROFILE-4
20	C-13	ILALO STREET PLAN & PROFILE-5
21	C-14	KOULA STREET PLAN & PROFILE
22	C-15	OHE STREET PLAN & PROFILE
23	C-16	COOKE STREET PLAN & PROFILE
24	C-17	CORAL STREET PLAN & PROFILE
25	C-18	KEAWE STREET PLAN & PROFILE
26	C-19	WATERLINE PROFILES-1
27	C-20	WATERLINE PROFILES-2
28	C-21	WATERLINE PROFILES-3
29	C-22	WATERLINE PROFILES-4
30	C-23	SIGNING & STRIPING PLAN-1
31	C-24	SIGNING & STRIPING PLAN-2
32	C-25	SIGNING & STRIPING DETAILS
33	C-26	WATER DETAILS
34	C-27	DRAINAGE DETAILS-1
35	C-28	DRAINAGE DETAILS-2
36	C-29	DRAINAGE DETAILS-3
37	C-30	ROADWAY DETAILS-1
38	C-31	ROADWAY DETAILS-2
39	C-32	SEWER DETAILS-1
40	C-33	SEWER DETAILS-2
41	C-33A	SEWER DETAILS-3
42	C-33B	PAVERTILE LAYOUT-1 (SHEET REPLACED)
43	C-33C	PAVERTILE LAYOUT-2 (SHEET REPLACED)
44	C-33D	PAVERTILE LAYOUT-3 & DETAILS (SHEET REPLACED)
45	C-34	CROSS SECTIONS-1
46	C-35	CROSS SECTIONS-2
47	C-36	BORING LOGS-1
48	C-37	BORING LOGS-2
49	C-38	TRAFFIC CONTROL PLAN-1
50	C-39	TRAFFIC CONTROL PLAN-2
51	C-40	TRAFFIC CONTROL PLAN-3
52	C-41	TRAFFIC CONTROL PLAN-4
53	C-42	TRAFFIC CONTROL PLAN-5
54	C-43	TRAFFIC CONTROL PLAN-6

44A C-33E PAVERTILE LAYOUT DETAILS
44B C-33F CURB RAMP DETAILS-1
44C C-33G CURB RAMP DETAILS-2

SHEET	DWG. NO.	DESCRIPTION
		CIVIL (Continued)
55	C-44	TRAFFIC CONTROL PLAN-7
56	C-45	TRAFFIC CONTROL PLAN-8
57	C-46	TRAFFIC CONTROL PLAN-9
58	C-47	TRAFFIC CONTROL PLAN-10
59	C-48	TRAFFIC CONTROL PLAN-11
		STRUCTURAL
60	S-1	GENERAL NOTES
61	S-2	TYPICAL DETAILS
62	S-3	TYPICAL BOX CULVERTS AND DRAINS
63	S-4	CULVERT CONNECTION AND END PLANS AND SECTIONS
64	S-5	CULVERT BEND PLANS
65	S-6	SPECIAL BOX DMH 1, 2, 3, 4, & 5 PLAN AT CULVERT, TOP PLAN AND SECTIONS
66	S-7	BOX DRAIN FOUNDATION PLAN
67	S-8	BOX DRAIN ROOF TOP PLAN
68	S-9	BOX DRAIN SECTIONS
69	S-10	BOX DRAIN SECTIONS
70	S-11	SPECIAL CATCH BASIN 7 PLAN AND SECTIONS
71	S-12	SPECIAL CATCH BASIN 8 PLAN AND SECTIONS
72	S-13	30" SEWER CONNECTION DETAILS
73	S-14	HTCO SPECIAL TYPE MANHOLE PLAN AND SECTIONS
74	S-15	HTCO SPECIAL TYPE MANHOLE SECTION AND DETAIL
75	S-16	V-3 MANHOLE NOTES AND DETAILS
76	S-17	V-3 MANHOLE PLANS, SECTIONS AND DETAILS
		ELECTRICAL
77	E-1	GENERAL ELECTRICAL SITE PLAN
78	E-2	ELECTRICAL SYMBOLS LIST, GENERAL NOTES
79	E-3	UTILITY COMPANY CONSTRUCTION NOTES
80	E-4	GTE HAWAIIAN TELEPHONE COMPANY GENERAL CONSTRUCTION NOTES
81	E-5	ELECTRICAL DEMOLITION PLAN-1
82	E-6	ELECTRICAL DEMOLITION PLAN-2
83	E-7	ELECTRICAL DEMOLITION PLAN-3
84	E-8A	ILALO STREET ELECTRICAL UTILITY PLAN & PROFILE-1
85	E-9B	ILALO STREET ELECTRICAL UTILITY PLAN & PROFILE-2
86	E-10B	ILALO STREET ELECTRICAL UTILITY PLAN & PROFILE-3
86A	E-10B	ILALO STREET ELECTRICAL UTILITY PLAN & PROFILE-3
87	E-11B	ILALO STREET ELECTRICAL UTILITY PLAN & PROFILE-4
88	E-12B	ILALO STREET ELECTRICAL UTILITY PLAN & PROFILE-5
89	E-13	ILALO STREET LIGHTING/TRAFFIC SIGNAL PLAN-1
90	E-14	ILALO STREET LIGHTING/TRAFFIC SIGNAL PLAN-2
91	E-15	ILALO STREET LIGHTING/TRAFFIC SIGNAL PLAN-3
92	E-16	ILALO STREET LIGHTING/TRAFFIC SIGNAL PLAN-4
93	E-17	ILALO STREET LIGHTING/TRAFFIC SIGNAL PLAN-5
94	E-18	EQUIPMENT LAYOUT PLAN
95	E-19	TYPE "A" AND "C" PULLBOX DETAILS
96	E-20	TYPE "A" AND "C" PULLBOX DETAILS

SHEET	DWG. NO.	DESCRIPTION
		ELECTRICAL (Continued)
97	E-21	STREET LIGHTING DETAILS
98	E-22	DECORATIVE STREET LIGHT DETAILS
99	E-23	STREET LIGHT METERING ENCLOSURE DETAILS
100	E-24	STREET LIGHTING ONE LINE DIAGRAM
101	E-25	STREET LIGHT CONNECTION DIAGRAM
102	E-26	IRRIGATION METERING ENCLOSURE DETAILS
103	E-27	DUCT SCHEDULE, DUCT DETAILS
104	E-28	DUCT DETAILS
105	E-29	DRIVEWAY LIGHT DETAILS - TMK:2-1-60:07
106	E-30	FLOODLIGHT POLE DETAILS - TMK:2-1-15:09
107	E-31	MISCELLANEOUS ELECTRICAL DETAILS
108	E-32	MISCELLANEOUS ELECTRICAL DETAILS
109	E-33	TELEPHONE MANHOLE BUTTERFLY LAYOUTS
110	E-34	TELEPHONE MANHOLE BUTTERFLY LAYOUTS
111	E-35	ELECTRIC MANHOLE BUTTERFLY LAYOUTS
112	E-36	ELECTRIC MANHOLE BUTTERFLY LAYOUTS
		LANDSCAPE
113	L-1 R	LANDSCAPE PLAN-1
114	L-2 R	LANDSCAPE PLAN-2
115	L-3 R	LANDSCAPE PLAN-3, MOUND & TREE GRATE INSTALLATION DETAILS
116	L-4 R	PLANTING DETAILS
		IRRIGATION
117	I-1 R	LANDSCAPE IRRIGATION PLAN-1
118	I-2 R	LANDSCAPE IRRIGATION PLAN-2
119	I-3 R	LANDSCAPE IRRIGATION PLAN-3, MOUND & TREE WELL INSTALL. DET.
120	I-4 R	LANDSCAPE IRRIGATION DETAILS
		PROPERTY MODIFICATIONS
121	P-1	PROPERTY MODIFICATIONS-1
122	P-2	PROPERTY MODIFICATIONS-2
123	P-3	PROPERTY MODIFICATIONS-3
124	P-4	PROPERTY MODIFICATIONS-4
125	P-5	PROPERTY MODIFICATIONS-5
126	P-6	PROPERTY MODIFICATIONS-6
127	P-7	PROPERTY MODIFICATIONS-7
127A	P-7A	PROPERTY MODIFICATIONS TMK:2-1-60:07, 09 & 10 PUMP STATION LAYOUT
128	P-8	PROPERTY MODIFICATIONS-8
129	P-8A	PROPERTY MODIFICATIONS-9
130	P-9	GENERAL NOTES
131	P-10	TYPICAL DETAILS
132	P-11	FOUNDATION & GROUND FLOOR PLAN, ROOF FRAMING PLAN
133	P-12	BUILDING ELEVATIONS
134	P-13	BUILDING SECTIONS
135	P-14	FOUNDATION DETAILS AND SECTIONS
136	P-15	ROOF SECTIONS AND DETAILS
137	P-16	CARPORT- WINDOW AND DOOR SCHEDULE
137A	P-16A	PROPERTY MODIFICATIONS TMK:2-1-60:07, 09 & 10 BALLAST BLOCK DETAILS
138	P-17	CARPORT ELECTRICAL PLAN - TMK: 2-1-59:01
139	P-18	LIGHT POLE DETAILS - TMK: 2-1-59:04 & 05
140	P-19	LIGHT POLE DETAILS - TMK: 2-1-60:09
140A	P-20	PUMP STATION SITE PLAN
140B	P-21	PUMP STATION ELECTRICAL PLAN

127B P-7B PROPERTY MODIFICATIONS MISCELLANEOUS DETAILS 1 TMK:2-1-60:07, 09 & 10
127C P-7C PROPERTY MODIFICATIONS MISCELLANEOUS DETAILS 2 TMK:2-1-60:07, 09 & 10

CIVIL LEGEND

EXISTING

- TILE WALL W/ C.L. FENCE
- ROCK WALL
- SEWER LINE
- DRAIN LINE
- WATER LINE
- TELEPHONE
- ELECTRICAL LINE
- GAS LINE
- FIRE HYDRANT
- MANHOLE
- CATCH BASIN
- CURB RAMP
- ELECTRIC POLE
- OVERHEAD UTILITIE LINE
- SIGN
- PROPERTY LINE OR R/W

- African Tulip
- Banyan Tree
- Chinese Banyan Tree
- Coconut Tree
- Keawe Tree
- Mango Tree
- Monkey Pod
- Octopus Tree
- Other Trees
- Rubber Tree
- Hala Tree

NEW

- DROP DRIVEWAY APRON WITH ENTRY GATE
- CURB RAMP
- SEWER LATERAL
- FIRE HYDRANT
- PROPERTY LINE OR R/W
- EASEMENT
- SEWER LINE
- DRAIN LINE
- WATER LINE
- UTILITY STUB OUT
- VALVE BOX
- MANHOLE
- CATCH BASIN
- GATE VALVE
- AIR RELIEF VALVE
- SEWER LATERAL W/ CHIMNEY
- REINFORCED CONCRETE JACKET
- WATER LAT. W/ DOUBLE HUB TEE
- WATER LAT. - SINGLE SERVICE
- STREET SURVEY MONUMENT
- CHAIN LINK FENCE
- SHEET FLOW
- STREET LIGHT
- DRAIN INLET
- CONTOUR
- SPOT ELEVATION
- APPROXIMATE BORING LOG LOCATION & NUMBER
- DETAIL REFERENCE
- SHEET ON WHICH DETAIL IS CALLED OUT
- SHEET ON WHICH DETAIL IS DRAWN

CIVIL ABBREVIATIONS

Ac	ACRE
ARV	AIR RELIEF VALVE
A	AREA
AC	ASPHALTIC CONCRETE
BLK.	BLOCK
(BV)	BOTTOM, VERTICAL
BW	BOTTOM OF WALL
CL	CHAIN LINK
COTG	CLEANOUT TO GRADE
CFS	CUBIC FEET PER SECOND
DI	DRAIN INLET
DMH	DRAIN MANHOLE
DIP	DUCTILE IRON PIPE
EP	ELECTRIC POLE
ELEV.	ELEVATION
FG	FINISH GRADE
FH	FIRE HYDRANT
Q	FLOW RATE
HECO	HAWAIIAN ELECTRIC CO.
(H)	HORIZONTAL
HGL	HYDRAULIC GRADE LINE
I.P.T.	INTERNAL PIPE THREAD
INV.	INVERT
LT.	LEFT
LP	LIGHT POLE
LF	LINEAR FEET
MH	MANHOLE
MIN.	MINIMUM
MAX.	MAXIMUM
MW	MONITORING WELL
MON.	MONUMENT
O/S	OFFSET
PE	POLYETHELENE
PVC	POLYVINYL CHLORIDE
PSI	POUNDS PER SQUARE INCH
℄	PROPERTY LINE
RED.	REDUCER
RC	REINFORCED CONCRETE
RCP	REINFORCED CONCRETE PIPE
RT.	RIGHT
R/W	RIGHT-OF-WAY
C/O	SEWER CLEANOUT
SMH	SEWER MANHOLE
SCMH	SIGNAL CORPS MANHOLE
S=	SLOPE EQUALS
SPR	SPRINKLER BOX
STD.	STANDARD
SDMH	STORM DRAIN MANHOLE
THK.	THICK
TW	TOP OF WALL
(TV)	TOP, VERTICAL
TYP.	TYPICAL
VCP	VITRIFIED CLAY PIPE
WMH	WATER MANHOLE
WM	WATER METER
WV	WATER VALVE
WVMH	WATER VALVE MANHOLE
W.P.	WORKING PRESSURE
n	MANNING'S COEFFICIENT
Qr	REQUIRED SEWER LINE CAPACITY
Qa	AVAILABLE SEWER LINE CAPACITY
Vr	FLOW VELOCITY AT Qr
Va	FLOW VELOCITY AT Qa

REVISION	DATE	DESCRIPTION	MADE BY	APPROVED

Planning - Engineering - Environmental Studies - Photogrammetry - Surveying - Construction Management
R. M. TOWILL CORPORATION
808 842 1133 420 Waiakamilo Road Suite 411 Honolulu Hawaii 96817-4941

GREG H. HIYAKUMOTO LICENSED PROFESSIONAL ENGINEER No. 6662-C HAWAII, U.S.A.

THIS WORK WAS PREPARED BY ME OR UNDER MY SUPERVISION.
BY: R. M. TOWILL CORPORATION

HAWAII COMMUNITY DEVELOPMENT AUTHORITY
STATE OF HAWAII
HONOLULU, HAWAII

KAKA'AKO COMMUNITY DEVELOPMENT DISTRICT
IMPROVEMENT DISTRICT 9
ILALO STREET IMPROVEMENTS

INDEX OF DRAWINGS

ENGINEER: LSY CHECKED BY: GHH
DRAFTSMAN: BEY DATE: JULY 13, 2000

EXECUTIVE DIRECTOR, HAWAII COMMUNITY DEVELOPMENT AUTHORITY

FILE	POCKET	FOLDER	NO.

"RECORD DRAWINGS" G-2 SHEET 2 OF 140 SHEETS

GENERAL NOTES

1. ALL CONSTRUCTION WORK SHALL BE DONE IN ACCORDANCE WITH THE STANDARD SPECIFICATIONS FOR PUBLIC WORKS CONSTRUCTION, SEPTEMBER 1986 & STANDARD DETAILS FOR PUBLIC WORKS CONSTRUCTION, SEPTEMBER 1984, AS AMENDED, OF THE DEPARTMENT OF PLANNING & PERMITTING, CITY & COUNTY OF HONOLULU.

2. THE LOCATION OF UNDERGROUND PIPES, CABLES OR DUCTLINES KNOWN TO EXIST BY THE ENGINEER FROM HIS SEARCH OF RECORDS INDICATED ON THE PLANS ARE APPROXIMATE ONLY. THE CONTRACTOR SHALL VERIFY THE EXACT LOCATIONS AND DEPTHS OF THE EXISTING UTILITIES AND EXERCISE PROPER CARE IN EXCAVATING IN THE AREA. THE CONTRACTOR SHALL BE RESPONSIBLE FOR ANY DAMAGES TO THE EXISTING UTILITIES. WHEREVER CONNECTIONS OF NEW UTILITIES TO EXISTING UTILITIES ARE SHOWN ON THE PLANS, THE CONTRACTOR SHALL EXPOSE THE EXISTING LINES AT THE PROPOSED CONNECTIONS TO VERIFY THEIR LOCATIONS AND DEPTHS PRIOR TO EXCAVATION FOR THE NEW LINES.

3. THE LOCATION OF UNDERGROUND PIPES, CABLES OR DUCTLINES KNOWN TO EXIST BY THE ENGINEER FROM HIS SEARCH OF RECORDS AS INDICATED ON THE PLANS ARE APPROXIMATE ONLY. THE CONTRACTOR SHALL MAKE AN INDEPENDENT CHECK ON THE GROUND BY PROBING AND WITH THE VARIOUS UTILITY COMPANIES AND GOVERNMENTAL AGENCIES TO VERIFY THE EXACT LOCATIONS AND DEPTHS OF THE EXISTING UTILITIES, AND EXERCISE PROPER CARE IN EXCAVATING IN THE AREA. THE CONTRACTOR SHALL BE RESPONSIBLE FOR ANY DAMAGES TO THE EXISTING UTILITIES. WHEREVER CONNECTIONS OF NEW UTILITIES TO EXISTING UTILITIES ARE SHOWN ON THE PLANS, THE CONTRACTOR SHALL EXPOSE THE EXISTING LINES AT THE PROPOSED CONNECTIONS TO VERIFY THEIR LOCATIONS AND DEPTHS PRIOR TO EXCAVATION FOR THE NEW LINES.

4. ALL EXISTING UTILITIES TO REMAIN IN USE, WHETHER OR NOT SHOWN ON THE PLANS, SHALL BE PROTECTED AT ALL TIMES BY THE CONTRACTOR DURING CONSTRUCTION UNLESS SPECIFIED ON THE PLANS TO BE ABANDONED. ANY DAMAGE TO THE EXISTING UTILITIES SHALL BE REPAIRED AND PAID FOR BY THE CONTRACTOR.

5. UNLESS RELOCATION IS CALLED FOR ON THE PLANS, EXISTING UTILITIES SHALL REMAIN IN-SERVICE AND IN PLACE. IF RELOCATION OF EXISTING UTILITIES IS REQUIRED FOR THE CONTRACTOR'S CONVENIENCE, INTERRUPTION OF SERVICE SHALL BE KEPT TO A MINIMUM AND SHALL BE DONE AT THE CONTRACTOR'S EXPENSE AND ONLY WITH THE APPROVAL OF THE CONSTRUCTION MANAGER AND THE UTILITY OWNER.

6. THE CONTRACTOR SHALL FIELD VERIFY THE OPERATIONAL STATUS OF ALL EXISTING UTILITIES TO BE REMOVED OR ABANDONED IN PLACE. ANY DISCREPANCY SHALL BE BROUGHT TO THE ATTENTION OF THE CONSTRUCTION MANAGER.

7. VERIFY AND CHECK ALL DIMENSIONS AND DETAILS SHOWN ON THE DRAWINGS PRIOR TO THE START OF CONSTRUCTION. ANY DISCREPANCY SHALL BE IMMEDIATELY BROUGHT TO THE ATTENTION OF THE CONSTRUCTION MANAGER FOR CLARIFICATION.

8. OTHER CONTRACTORS MAY BE WORKING IN THE IMMEDIATE VICINITY OF THIS PROJECT. THE CONTRACTOR SHALL COORDINATE HIS WORK WITH THESE CONTRACTORS IN A MANNER THAT WILL RESULT IN THE TIMELY AND ORDERLY EXECUTION OF THIS CONTRACT AND NOT UNREASONABLY INTERFERE OR HINDER THE OTHER CONTRACTORS. THE CONTRACTOR SHALL BE RESPONSIBLE TO COORDINATE THE WORK AT THE PROJECT LIMITS AND MATCH NEW IMPROVEMENTS AND/OR, IF APPLICABLE, PROVIDE TEMPORARY TRANSITIONS TO EXISTING ROADWAY AND UTILITY IMPROVEMENTS.

9. ADJUSTMENTS WITHIN PRIVATE PROPERTY ARE SUBJECT TO PERMISSION OF AFFECTED OWNER AS VERIFIED BY THE HAWAII COMMUNITY DEVELOPMENT AUTHORITY (HCDA).

10. NO BLASTING SHALL BE PERMITTED ON THIS PROJECT.

11. FOR STRUCTURES TO BE ABANDONED IN PLACE, TOP 4' BELOW FINISH GRADE SHALL BE REMOVED, BASE SHALL BE CRACKED AND STRUCTURE SHALL BE BACKFILLED WITH APPROVED MATERIAL.

12. THE CONTRACTOR SHALL PROVIDE SAFE ACCESS TO AND FROM ALL DRIVEWAYS AND STREETS.

13. THE PLANS ARE PREPARED IN ACCORDANCE WITH THE SOIL ENGINEER'S DISCUSSIONS AND RECOMMENDATIONS AS STATED IN THE "GEOTECHNICAL ENGINEERING EXPLORATION, KAKA'AKO COMMUNITY DEVELOPMENT DISTRICT, IMPROVEMENT DISTRICT 9, ILALO STREET IMPROVEMENTS, HONOLULU, OAHU, HAWAII," JUNE 16, 1999.

14. THE CONTRACTOR SHALL NOTIFY THE CONSTRUCTION MANAGER UPON UNCOVERING ANY POTENTIAL HISTORICAL ARTIFACTS OR ITEMS OF ARCHAEOLOGICAL SIGNIFICANCE.

15. THE EXISTING IMPROVEMENTS ON THE PREMISES AND IN ADJACENT AREA THAT ARE NOT TO BE REMOVED, SHALL BE PRESERVED AND PROTECTED. ANY AND ALL DAMAGES RESULTING FROM THE CONTRACTOR'S CONSTRUCTION OPERATIONS SHALL BE REPLACED AND REPAIRED TO ORIGINAL CONDITION, TO THE SATISFACTION OF THE OWNER.

16. DEMOLITION AND ADJUSTMENT OF BUILDINGS, BY OTHERS SHALL BE DONE PRIOR TO OR CONCURRENT WITH THE PROJECT.

17. THE CONTRACTOR SHALL NOTIFY THE CONSTRUCTION SECTION, CIVIL ENGINEERING BRANCH, DEPARTMENT OF PLANNING AND PERMITTING AT 523-4881 TO ARRANGE FOR INSPECTIONAL SERVICES AND SUBMIT THREE (3) SETS OF APPROVED CONSTRUCTION PLANS SEVEN (7) DAYS PRIOR TO COMMENCEMENT OF WORK. THE CONTRACTOR SHALL PAY FOR ALL INSPECTION COSTS.

18. THE CONTRACTOR SHALL BE RESPONSIBLE FOR CONFORMANCE WITH THE APPLICABLE PROVISIONS OF THE WATER QUALITY AND WATER POLLUTION CONTROL STANDARDS CONTAINED IN HAWAII ADMINISTRATIVE RULES, CHAPTER 11-54, "WATER QUALITY STANDARDS" AND CHAPTER 11-55, "WATER POLLUTION CONTROL", AS WELL AS CHAPTER 14 OF THE REVISED ORDINANCES OF HONOLULU, AS AMENDED. BEST MANAGEMENT PRACTICES SHALL BE EMPLOYED AT ALL TIMES DURING CONSTRUCTION.

19. THE CONTRACTOR AT HIS OWN EXPENSE SHALL KEEP THE PROJECT AREA AND SURROUNDING AREAS FREE FROM DUST NUISANCE. THE WORK SHALL BE IN CONFORMANCE WITH THE AIR AND WATER POLLUTION CONTROL STANDARDS AND REGULATIONS OF THE STATE DEPARTMENT OF HEALTH.

20. NO CONTRACTOR SHALL PERFORM ANY CONSTRUCTION OPERATION SO AS TO CAUSE FALLING ROCKS, SOIL, OR DEBRIS IN ANY FORM TO FALL, SLIDE OR FLOW INTO EXISTING CITY DRAINAGE SYSTEMS, OR ADJOINING PROPERTIES, STREETS OR NATURAL WATERCOURSES. SHOULD SUCH VIOLATIONS OCCUR, THE CONTRACTOR MAY BE CITED AND THE CONTRACTOR SHALL IMMEDIATELY MAKE ALL REMEDIAL ACTIONS NECESSARY.

21. THE CONTRACTOR SHALL RESTORE TO THEIR ORIGINAL CONDITION ALL IMPROVEMENTS DAMAGED AS A RESULT OF HIS CONSTRUCTION, INCLUDING PAVEMENTS, EMBANKMENTS, CURBS, SIGNS, LANDSCAPING, STRUCTURES, UTILITIES, FENCES, ETC. UNLESS PROVIDED FOR SPECIFICALLY IN THE PROPOSAL, DEMOLITION AND RESTORATION WORK SHALL BE CONSIDERED INCIDENTAL AND INCLUDED IN THE BID PRICES FOR THE VARIOUS ITEMS OF WORK.

22. FOR BENCHMARK SEE SHEET G-7.

23. SEE LANDSCAPING SHEETS FOR THE LOCATION OF PLANTERS WITHIN THE SIDEWALKS, AND FOR THE JOINTING PLAN OF CONCRETE PAVEMENTS. TOPS OF ALL CATCH BASINS WITHIN SIDEWALKS SHALL HAVE SPECIAL CONCRETE FINISH. REFER TO SPECIFICATIONS.

24. ALL CATCH BASINS SHALL BE STENCILED AS SHOWN IN CATCH BASIN STENCIL DETAIL. (SEE SHEET C-28)

25. ALL COORDINATES AND AZIMUTHS ARE REFERRED TO "PUNCHBOWL".

26. ELEVATIONS SHOWN ON THESE PLANS ARE BASED ON MEAN SEA LEVEL DATUM.

GENERAL NOTES (CONT.)

27. ALL NEW SIDEWALK AND WALKWAY CROSS SLOPES SHALL BE NO STEEPER THAN 50H:1V. CROSS SLOPE SHALL BE DEFINED AS THE DIRECTION PERPENDICULAR TO THE PREVALENT PEDESTRIAN FLOW OF TRAVEL. THE LONGITUDINAL SLOPES SHALL BE NO STEEPER THAN 20H:1V. THIS IS DEFINED AS THE DIRECTION OF THE PREVALENT PEDESTRIAN FLOW OF TRAVEL.

28. ALL NEW WHEELCHAIR-ACCESSIBLE CURB RAMPS AND FLARES SHALL BE NO STEEPER THAN 12H:1V. RAMPS AND FLARES SHALL BE LENGTHENED AS REQUIRED TO ACHIEVE THIS MAXIMUM SLOPE.

29. SEE BEST MANAGEMENT PRACTICES / TEMPORARY EROSION CONTROL NOTES ON SHEET C-3.

GRADING NOTES

1. ALL GRADING WORK SHALL BE DONE IN ACCORDANCE WITH CHAPTER 14, ARTICLES 13, 14, 15 AND 16, AS RELATED TO GRADING, SOIL EROSION AND SEDIMENT CONTROL, AT THE REVISED ORDINANCES OF HONOLULU, 1990, AS AMENDED, AND THE SOILS REPORT BY GEOLABS HAWAII, GEOTECHNICAL ENGINEERING EXPLORATION, KAKA'AKO COMMUNITY DEVELOPMENT DISTRICT, IMPROVEMENT DISTRICT 9, ILALO STREET IMPROVEMENTS, DATED JUNE 16, 1999.

2. NO CONTRACTOR SHALL PERFORM ANY GRUBBING OR GRADING OPERATION SO AS TO CAUSE FALLING ROCKS, SOIL OR DEBRIS IN ANY FORM TO FALL, SLIDE OR FLOW ONTO ADJOINING PROPERTIES, STREETS OR NATURAL WATERCOURSES. SHOULD SUCH VIOLATIONS OCCUR, THE CONTRACTOR SHALL IMMEDIATELY TAKE ALL NECESSARY REMEDIAL ACTION.

3. THE CONTRACTOR, AT HIS OWN EXPENSE, SHALL KEEP THE PROJECT AREA AND SURROUNDING AREA FREE FROM DUST NUISANCE. THE WORK SHALL BE IN CONFORMANCE WITH THE AIR POLLUTION CONTROL STANDARDS CONTAINED IN CHAPTER 11-60, "AIR POLLUTION CONTROL".

4. THE LOCATION OF UNDERGROUND PIPES, CABLES OR DUCTLINES KNOWN TO EXIST BY THE ENGINEER FROM HIS SEARCH OF RECORDS INDICATED ON THE PLANS ARE APPROXIMATE ONLY. THE CONTRACTOR SHALL VERIFY THE EXACT LOCATIONS AND DEPTHS OF THE EXISTING UTILITIES AND EXERCISE PROPER CARE IN EXCAVATING IN THE AREA. THE CONTRACTOR SHALL BE RESPONSIBLE FOR ANY DAMAGES TO THE EXISTING UTILITIES. WHEREVER CONNECTIONS OF NEW UTILITIES TO EXISTING UTILITIES ARE SHOWN ON THE PLANS, THE CONTRACTOR SHALL EXPOSE THE EXISTING LINES AT THE PROPOSED CONNECTIONS TO VERIFY THEIR LOCATIONS AND DEPTHS PRIOR TO EXCAVATION FOR THE NEW LINES.

5. ADEQUATE PROVISIONS SHALL BE MADE TO PREVENT SURFACE WATERS FROM DAMAGING THE CUT FACE OF AN EXCAVATION OR THE SLOPED SURFACES OF A FILL. FURTHERMORE, ADEQUATE PROVISIONS SHALL BE MADE TO PREVENT SEDIMENT-LADEN RUNOFF FROM LEAVING THE SITE.

6. ALL SLOPES AND EXPOSED AREAS SHALL BE SODDED OR PLANTED AS SOON AS FINAL GRADES HAVE BEEN ESTABLISHED. PLANTING SHALL NOT BE DELAYED UNTIL ALL GRADING WORK HAS BEEN COMPLETED. GRADING TO FINAL GRADE SHALL BE CONTINUOUS, AND ANY AREA WITHIN WHICH WORK HAS BEEN INTERRUPTED OR DELAYED SHALL BE PLANTED.

7. FILLS ON SLOPES STEEPER THAN 5:1 SHALL BE KEYED.

8. THE CITY SHALL BE INFORMED OF THE LOCATION OF THE BORROW/DISPOSAL SITE FOR THE PROJECT WHEN THE APPLICATION FOR A GRADING PERMIT IS MADE. THE BORROW/DISPOSAL SITE MUST ALSO FULFILL THE REQUIREMENTS OF THE GRADING ORDINANCE.

9. NO GRUBBING OR GRADING WORK SHALL BE DONE ON SATURDAYS, SUNDAYS AND HOLIDAYS AT ANY TIME WITHOUT PRIOR NOTICE TO THE DIRECTOR, D.P.P., PROVIDED SUCH GRADING WORK IS ALSO IN CONFORMANCE WITH HAWAII ADMINISTRATIVE RULES, CHAPTER 11-43, "COMMUNITY NOISE CONTROL FOR OAHU."

10. THE LIMITS OF THE AREA TO BE GRUBBED OR GRADED SHALL BE FLAGGED BEFORE THE COMMENCEMENT OF THE GRADING WORK.

11. ALL GRADING OPERATIONS SHALL BE PERFORMED IN CONFORMANCE WITH THE APPLICABLE PROVISIONS OF THE WATER POLLUTION CONTROL AND WATER QUALITY STANDARDS CONTAINED IN HAWAII ADMINISTRATIVE RULES, CHAPTER 11-55, "WATER POLLUTION CONTROL" AND CHAPTER 11-54, "WATER QUALITY STANDARDS" AND IF APPLICABLE, THE NPDES PERMIT FOR THE PROJECT.

12. WHERE APPLICABLE AND FEASIBLE THE MEASURES TO CONTROL EROSION AND OTHER POLLUTANTS SHALL BE IN PLACE BEFORE ANY GRUBBING OR EARTH MOVING PHASE OF THE GRADING IS INITIATED.

13. TEMPORARY EROSION CONTROLS SHALL NOT BE REMOVED BEFORE PERMANENT EROSION CONTROLS ARE IN-PLACE AND ESTABLISHED.

14. TEMPORARY EROSION CONTROL PROCEDURES SHALL BE SUBMITTED FOR APPROVAL PRIOR TO APPLICATION FOR GRUBBING AND GRADING PERMIT.

15. IF THE GRUBBING OR GRADING WORK INVOLVES CONTAMINATED SOIL, THEN ALL GRUBBING OR GRADING WORK SHALL BE DONE IN CONFORMANCE WITH APPLICABLE STATE AND FEDERAL REQUIREMENTS.

16. NON-COMPLIANCE TO ANY OF THE ABOVE REQUIREMENTS SHALL MEAN IMMEDIATE SUSPENSION OF ALL WORK, AND REMEDIAL WORK SHOULD COMMENCE IMMEDIATELY. ALL COSTS INCURRED SHALL BE BILLED TO THE PERMITTEE. FURTHERMORE, VIOLATORS SHALL BE SUBJECTED TO ADMINISTRATIVE, CIVIL AND/OR CRIMINAL PENALTIES.

17. ALL CUT AND FILL SLOPES SHALL BE 3H:1V OR FLATTER.

DRAINAGE NOTES

1. STORM DRAIN PIPES SHALL BE REINFORCED CONCRETE PIPE, CLASS III, UNLESS NOTED OTHERWISE.

2. ALL DRAIN LINES SHALL HAVE A MINIMUM COVER 3 FEET UNDER PAVED AREAS AND 2 FOOT COVER IN OTHER AREAS.

SEWER NOTES

1. ALL SEWER CONSTRUCTION SHALL BE PERFORMED IN ACCORDANCE WITH THE CITY'S STANDARD SPECIFICATIONS, SEPTEMBER 1986, THE DEPARTMENT OF PUBLIC WORKS STANDARD DETAILS, SEPTEMBER 1984, CURRENT CITY PRACTICES AND REVISED ORDINANCES OF HONOLULU, 1990, AS AMENDED, AND THE DESIGN STANDARDS OF THE DEPARTMENT OF WASTEWATER MANAGEMENT VOLUME 1, JULY 1983.

2. IN THE EVENT THAT ANY CHANGE IN ALIGNMENT OR GRADE FOR THE PROPOSED SEWERS ARE REQUIRED DUE TO UNFORESEEN CONFLICT WITH OTHER UTILITIES, THE CONSTRUCTION MANAGER OR THE MAKER OF THE PLANS SHALL BE RESPONSIBLE FOR THE REQUIRED CHANGES WHICH ARE TO BE PRESENTED TO THE DEPARTMENT OF PLANNING AND PERMITTING FOR APPROVAL.

3. THE CONTRACTOR SHALL NOTIFY THE INSPECTION SECTION, WASTEWATER BRANCH, DEPARTMENT OF DESIGN AND CONSTRUCTION AT 527-5842 OR 523-4345 TO ARRANGE FOR INSPECTION SERVICES AND SUBMIT FOUR (4) SETS OF APPROVED CONSTRUCTION PLANS SEVEN (7) DAYS PRIOR TO COMMENCEMENT OF SEWER WORK. THE CONTRACTOR SHALL PAY FOR ALL INSPECTION COSTS.

4. CRUSHED ROCK CRADLE IS PERMITTED WHERE SOIL IS STABLE. IN AREAS OF UNSTABLE SOIL, THE CONSTRUCTION MANAGER AND THE MAKER OF THE PLANS WILL DETERMINE THE PIPE SUPPORT REQUIRED.

5. TREES IN THE ROAD RIGHT-OF-WAY SHALL BE SITUATED A MINIMUM OF 8'-0" FROM THE CITY'S SEWER LINES.

6. THE UNDERGROUND PIPES, CABLES OR DUCTLINES KNOWN TO EXIST BY THE ENGINEER FROM HIS RESEARCH OF RECORDS ARE INDICATED ON THE PLANS. THE CONTRACTOR SHALL VERIFY THE LOCATION AND DEPTH OF THE FACILITIES, INCLUDING AND AFFECTING SEWER LINES, IN THE PRESENCE OF THE WASTEWATER INSPECTOR, AND EXERCISE PROPER CARE IN EXCAVATING THE AREA. THE CONTRACTOR SHALL BE RESPONSIBLE AND SHALL PAY FOR ALL DAMAGED UTILITIES.

7. THE CONTRACTOR SHALL BE RESPONSIBLE FOR MAINTAINING CONTINUOUS SEWER SERVICE TO ALL AFFECTED AREAS DURING CONSTRUCTION.

8. THE CONSULTING ENGINEER SHALL SUBMIT TO THE DEPARTMENT OF PLANNING AND PERMITTING MYLAR "AS-BUILT" TRACING OF THE CONSTRUCTION PLANS AS ACTUALLY CONSTRUCTED, SHOWING ALL CHANGES FROM THE ORIGINAL PLANS.

9. THE CONTRACTOR SHALL BE RESPONSIBLE FOR ANY SEWAGE SPILLS CAUSED DURING CONSTRUCTION. THE CONTRACTOR SHALL NOTIFY THE STATE DEPARTMENT OF HEALTH AND UTILIZE APPROPRIATE SAMPLING AND ANALYZING PROCEDURES. THE CONTRACTOR SHALL BE RESPONSIBLE FOR ALL PUBLIC NOTIFICATION AND PRESS RELEASES.

10. THE CONTRACTOR SHALL INSTALL "RAINSTOPPER" MANHOLE INSERTS IN ALL SEWER MANHOLES WITH TYPE "SA" FRAME AND COVER.

11. ALL DROP AND SHALLOW DROP SEWER MANHOLES SHALL BE LINED WITH PLASTIC LINERS. ALSO, IF THE VELOCITY EXCEEDS 10 FPS, THE SEWER MANHOLE SHALL BE PLASTIC LINED.

12. CONFINED SPACE

FOR ENTRY BY CITY PERSONNEL, INCLUDING INSPECTORS, INTO A PERMIT REQUIRED CONFINED SPACE AS DEFINED IN 29 CFR PART 1910.146(b), THE CONTRACTOR SHALL BE RESPONSIBLE FOR PROVIDING:

A. ALL SAFETY EQUIPMENT REQUIRED BY THE CONFINED SPACE REGULATIONS APPLICABLE TO ALL PARTIES OTHER THAN THE CONSTRUCTION INDUSTRY, TO INCLUDE, BUT NOT LIMITED TO, THE FOLLOWING:
   a. FULL BODY HARNESSES FOR UP TO TWO PERSONNEL.
   b. LIFELINE AND ASSOCIATED CLIPS.
   c. INGRESS/EGRESS AND FALL PROTECTION EQUIPMENT.
   d. TWO-WAY RADIOS (WALKIE-TALKIES) IF OUT OF LINE-OF-SIGHT.
   e. EMERGENCY (ESCAPE) RESPIRATOR (10 MINUTES DURATION).
   f. CELLULAR TELEPHONE TO CALL FOR EMERGENCY ASSISTANCE.
   g. CONTINUOUS GAS DETECTOR (CALIBRATED) TO MEASURE OXYGEN, HYDROGEN SULFIDE, CARBON MONOXIDE AND FLAMMABLES (CAPABLE OF MONITORING AT A DISTANCE AT LEAST 20-FT AWAY).
   h. PERSONAL MULTI-GAS DETECTOR TO BE CARRIED BY INSPECTOR.

B. CONTINUOUS FORCED AIR VENTILATION ADEQUATE TO PROVIDE SAFE ENTRY CONDITIONS.

C. ONE ATTENDANT/RESCUE PERSONNEL TOPSIDE (TWO, IF CONDITIONS WARRANT IT).

13. GEOTEXTILE FABRIC TO ENVELOPE THE PIPE (CRADLE AND SELECT BACKFILL MATERIAL SHALL BE PROVIDED WHERE WATER OR UNSTABLE SOIL CONDITIONS ARE ENCOUNTERED.

14. WHEN CONNECTING TO A LIVE SEWER LINE, THE CONTRACTOR SHALL ABIDE BY ALL CONDITIONS THAT THE DEPARTMENT OF HEALTH SETS FORTH TO MITIGATE ANY WASTEWATER SPILL THAT MAY OCCUR. THE CONTRACTOR SHALL INFORM THE CITY INSPECTOR FIVE (5) WORKING DAYS PRIOR TO THE ACTUAL CONNECTION. THE CONTRACTOR SHALL BE RESPONSIBLE FOR ANY FINES AND PENALTIES DUE TO ANY SPILLS RESULTING FROM THE CONNECTION.

15. SLOPE OF SEWER LATERALS SHALL BE 1% UNLESS OTHERWISE NOTED.

16. ALL SEWER LATERALS SHALL BE PROVIDED WITH ADVANCE SEWER RISERS. (SEE DETAIL, SHEET C-32)

17. BUILDING PLUMBING FACILITIES SHALL BE CONTROLLED BY SEWER LATERAL INVERTS.

18. S4C PIPE CRADLE SEALS SHALL BE INSTALLED 10 FEET FROM ALL SEWER MANHOLES TO PREVENT SOIL MIGRATION. (SEE DETAIL, SHEET C-33A)

APPROVED: DATE:

Dennis M. Nishimura — 7/25/00
Chief, Wastewater Branch, DPP

M. [illegible] — 7/18/00
Chief, Civil Engineering Branch, DPP

REVISION	DATE	DESCRIPTION	MADE BY	APPROVED

Planning – Engineering – Environmental Services – Photogrammetry – Surveying – Construction Management
R. M. TOWILL CORPORATION
808 842 1133 420 Waiakamilo Road Suite 411 Honolulu Hawaii 96817-4941

GREG H. HIYAKUMOTO LICENSED PROFESSIONAL ENGINEER No. 5662-C HAWAII, U.S.A.

THIS WORK WAS PREPARED BY ME OR UNDER MY SUPERVISION.

BY: [signature] 7/18/00
R/M. TOWILL CORPORATION

HAWAII COMMUNITY DEVELOPMENT AUTHORITY
STATE OF HAWAII
HONOLULU, HAWAII

KAKA'AKO COMMUNITY DEVELOPMENT DISTRICT
IMPROVEMENT DISTRICT 9
ILALO STREET IMPROVEMENTS

CONSTRUCTION NOTES-1

ENGINEER: GT — CHECKED BY: GH
DRAFTSMAN: GT — DATE: JULY 13, 2000

EXECUTIVE DIRECTOR, HAWAII COMMUNITY DEVELOPMENT AUTHORITY

"RECORD DRAWINGS" G-3 SHEET 3 OF 140 SHEETS

FILE	POCKET	FOLDER	NO.

WATER NOTES

1. UNLESS OTHERWISE SPECIFIED, ALL MATERIALS AND CONSTRUCTION OF WATER SYSTEM FACILITIES AND APPURTENANCES SHALL BE IN ACCORDANCE WITH THE CITY AND COUNTY OF HONOLULU, BOARD OF WATER SUPPLY'S "WATER SYSTEM STANDARDS" VOLUME 1, DATED 1985, THE "APPROVED MATERIAL LIST AND STANDARD DETAILS FOR WATER SYSTEM CONSTRUCTION," VOLUME 2, DATED 1985, AND THE "WATER SYSTEM EXTERNAL CORROSION CONTROL STANDARDS," VOLUME 3, DATED 1991, AND ALL SUBSEQUENT AMENDMENTS AND ADDITIONS.
2. ALL PLANS APPROVED BY THE BOARD OF WATER SUPPLY ARE BASED SOLELY ON THE ADEQUACY OF THE WATER SUPPLY. ALL OTHER FEATURES OF THE WATER SYSTEM SUCH AS LINES, GRADES, FITTINGS, DRAINAGE, ETC., AND OTHER FEATURES OF IMPROVEMENTS SHALL NOT BE THE RESPONSIBILITY OF THE BOARD OF WATER SUPPLY.
3. TEST PRESSURE SHALL BE 150 PSI.
4. THE CONTRACTOR SHALL NOTIFY THE BWS PLANNING AND ENGINEERING DIVISION, CONSTRUCTION SECTION IN WRITING AND SUBMIT FOUR SETS OF APPROVED CONSTRUCTION PLANS, ONE WEEK PRIOR TO COMMENCING WORK ON THE WATER SYSTEM.
5. AFTER INSTALLATION OF TAPPING SLEEVE AND VALVE PRIOR TO ACTUAL TAPPING OPERATIONS, THE ASSEMBLY SHALL BE TESTED AT 150 PSI ON BOTH SIDES OF THE VALVE.
6. WATER COMMITMENT SHALL BE CANCELED IF THE APPROVED CONSTRUCTION PLANS ARE ALLOWED TO LAPSE.
7. THE CONTRACTOR SHALL CHLORINATE THE ENTIRE INSIDE SURFACE OF EACH PIPE AND FITTING WITH DISINFECTION SOLUTION OF 5 OUNCES OF SODIUM HYPOCHLORITE MIXED WITH 10 GALLONS OF WATER. (FOR CONNECTION ONLY)
8. THE CONTRACTOR SHALL BE RESPONSIBLE FOR THE PROTECTION OF ALL WATER LINES DURING CONSTRUCTION. THE CONTRACTOR SHALL BE ESPECIALLY CAREFUL WHEN EXCAVATING BEHIND WATER LINES, TEES, AND BENDS WHEREVER THERE IS A POSSIBILITY OF WATER LINE MOVEMENT DUE TO THE REMOVAL OF THE SUPPORTING EARTH BEHIND THE EXISTING REACTION BLOCKS. THE CONTRACTOR SHALL TAKE WHATEVER MEASURE NECESSARY TO PROTECT THE WATER LINES, SUCH AS CONSTRUCTING SPECIAL REACTION BLOCKS (WITH BWS APPROVAL) AND/OR MODIFYING HIS CONSTRUCTION METHODS.
9. THE EXISTENCE AND LOCATION OF UNDERGROUND UTILITIES AND STRUCTURES AS SHOWN ON THE PLANS ARE FROM THE LATEST AVAILABLE DATA BUT IS NOT GUARANTEED AS TO THE ACCURACY OR THE ENCOUNTERING OF OTHER OBSTACLES DURING THE COURSE OF THE WORK. THE CONTRACTOR SHALL BE RESPONSIBLE AND SHALL PAY FOR ALL DAMAGES TO EXISTING UTILITIES. THE CONTRACTOR SHALL NOT ASSUME THAT WHERE NO UTILITIES ARE SHOWN, THAT NONE EXIST.
10. PRIOR TO INSTALLATION, THE CONTRACTOR SHALL SUBMIT FOR APPROVAL BY BOARD OF WATER SUPPLY, THE MANUFACTURER'S CERTIFICATION THAT ALL CAST IRON (GRAY OR DUCTILE) FITTINGS FOR THE PROJECT CONFORM IN ALL RESPECTS TO THE WATER SYSTEM STANDARDS, DATED 1985.
11. POLYGON SHAPE FOR MECHANICAL JOINT GLANDS AS DESCRIBED IN AWWA STANDARD C111 SHALL BE "STRAIGHT-SIDED" OR AN APPROVED EQUAL ON A JOB TO JOB BASIS.
12. RE-APPROVAL SHALL BE REQUIRED IF THIS PROJECT IS NOT UNDER CONSTRUCTION WITHIN A PERIOD OF TWO YEARS.
13. CONTRACTOR SHALL CUT AND PLUG ALL EXISTING UNUSED LATERALS AT THE MAIN WHETHER OR NOT SHOWN ON THE PLANS. METER AND VALVE BOXES TO BE OR ALREADY ABANDONED SHALL BE DEMOLISHED OR REMOVED AND PROPERLY DISPOSED OF. THE DAMAGED AREA SHALL BE REPAIRED TO AN EQUAL OR BETTER CONDITION THAN THE IMMEDIATE AREA. ALL WORK SHALL BE DONE AT THE EXPENSE OF THE CONTRACTOR.
14. THE CONTRACTOR SHALL FURNISH AND INSTALL DIELECTRIC COUPLING AT ALL TAPS AND AFTER METERS FOR ALL COPPER SERVICE LATERAL CONNECTIONS.
15. ADEQUATE OFFSITE FIRE PROTECTION MEETING THE BWS STANDARD SHALL BE INSTALLED AND COMPLETED PRIOR TO CONSTRUCTION OF BUILDINGS.
16. PRESSURE REGULATORS ARE RECOMMENDED FOR ALL LOTS.
17. AT THE ELECTRICAL/SIGNAL DUCTLINE WATER CROSSINGS, ADJUST ALL ELECTRICAL/SIGNAL DUCTLINE ELEVATIONS TO MAINTAIN 6" VERTICAL CLEAR SEPARATION FROM ALL WATERLINES (12" CLEAR FOR ALL ELECTRICAL/SIGNAL DUCTLINE STRUCTURES LARGER THEN 16") AT NO COST TO THE BOARD OF WATER SUPPLY.
18. MAINTAIN 3'-0" MIN. HORIZONTAL CLEAR SEPARATION BETWEEN ALL WATERLINE SYSTEMS AND NEAREST ELECTRICAL/SIGNAL DUCTLINES PARALLELING THE WATER SYSTEM AT NO COST TO THE BOARD OF WATER SUPPLY.
19. MAINTAIN 3'-0" MIN. HORIZONTAL CLEAR SEPARATION BETWEEN STREET LIGHT/TRAFFIC SIGNAL STANDARDS (INCLUDING MODULAR UNITS) AND THE NEAREST WATER SYSTEM. CONTRACTOR SHALL FIELD VERIFY FOR ANY CONFLICTS AT EACH STREET LIGHT/TRAFFIC SIGNAL STANDARD LOCATION. WHERE CONFLICTS OCCUR, THE CONTRACTOR SHALL COORDINATE WITH THE PROJECT ENGINEER TO REVISE THE STREET LIGHT/TRAFFIC SIGNAL STANDARD TO PROVIDE THE REQUIRED CLEARANCES AT NO COST TO BWS.
20. THE CONTRACTOR/DEVELOPER SHALL OBTAIN AN NPDES PERMIT PRIOR TO CHLORINATION AND/OR DEWATERING. A COPY OF THE PERMIT SHALL BE SUBMITTED TO THE BOARD OF WATER SUPPLY, PLANNING AND ENGINEERING DIVISION, CONSTRUCTION SECTION.
21. SOIL RESISTIVITY FOR THE SITE HAS A CORROSION RATING OF 2 AS REPORTED BY "SOIL RESISTIVITY SURVEY, KAKAAKO COMMUNITY DEVELOPMENT DISTRICT, IMPROVEMENT DISTRICT 8, ILALO STREET IMPROVEMENTS, HONOLULU, OAHU, HAWAII," DATED JUNE 16, 1999. ALL REQUIRED ELECTRICAL ISOLATION PROCEDURES AND CORROSION CONTROL REQUIREMENTS SHALL APPLY.
22. PIPE CUSHION SHALL BE OF HIGH RESISTIVITY MATERIAL. THE CONTRACTOR SHALL SUBMIT A SOIL CERTIFICATION THAT HIGH RESISTANT CUSHION MATERIAL HAS A RESISTIVITY GREATER THAN 5,000 OHM-CM. REMAINDER OF THE BACKFILL MATERIAL SHALL BE AS SPECIFIED IN VOLUME 1 OF THE WATER SYSTEM STANDARDS. PIPE CUSHION AND BACKFILL MATERIAL SHALL CONTAIN NO HAZARDOUS SUBSTANCES ABOVE REGULATORY ACTION LEVELS INCLUDING BUT NOT LIMITED TO LEAD, ASBESTOS, MERCURY, CHROMIUM, CADMIUM, ZINC, STRONTIUM, AND POLYCHLORINATED BIPHENYLS (PCB).
23. ALL DUCTILE IRON PIPE, FITTINGS AND VALVES SHALL BE WRAPPED WITH TWO LAYERS OF 8 MIL. POLYETHYLENE WRAP.
24. TWO-WAY BLUE REFLECTIVE HYDRANT MARKERS TYPE DB SHALL BE INSTALLED AT ALL NEW FIRE HYDRANT INSTALLATIONS. CONTRACTOR SHALL VERIFY THE EXACT LOCATIONS OF HYDRANT MARKERS WITH THE NEAREST HONOLULU FIRE DEPARTMENT BATTALION CHIEF.
25. CLEANING SHALL BE BY THE USE OF "PIGS" INTRODUCED INTO THE PIPELINE AND RUN COMPLETELY THROUGH ALL INSTALLED PIPELINES AND ALL BRANCH LINES FOR FIRE HYDRANTS. "PIGGING" OF SERVICE LATERALS IS NOT REQUIRED. BARE FOAM "PIGS" SHALL BE USED TO SWAB PIPING CLEAN AS EACH LENGTH OF THE PIPELINE IS INSTALLED. EACH "PIG" SHALL CONSIST OF A CYLINDRICAL PIECE OF POLYURETHANE FOAM WITH A DENSITY OF 3-7 POUNDS PER CUBIC FOOT AND A VINYL-COATED NOSE. OUTSIDE DIAMETER OF THE "PIG" SHALL BE EQUAL TO 1-1/4 TO 1-1/2 TIMES THE INSIDE DIAMETER OF THE PIPE BEING INSTALLED. THE LENGTH OF THE "PIG" SHALL BE 1-1/2 TO 2 TIMES ITS DIAMETER. PRIOR TO USE, THE "PIG SHALL BE SUBMERGED IN A CHLORINE SOLUTION OF 1 OZ. OF 5% CHLORINE BLEACH IN 5 GALLONS OF WATER. "PIGGING" OF THE PIPELINE SHALL BE CONSIDERED INCIDENTAL TO THE INSTALLATION OF THE NEW PIPELINE.
26. ALL SECTIONS OF THE WATER MAIN REQUIRING REINFORCED CONCRETE JACKETING SHALL BE DUCTILE IRON PIPE OR CONCRETE CYLINDER PIPE AND FITTINGS.
27. BALL CORP AND BALL STOP SHALL BE USED IN LIEU OF A CORPORATION STOP AND STOPCOCK, RESPECTIVELY.
28. POLYVINYL CHLORIDE (PVC) PIPES SHALL BE CLASS 150. ALL DUCTILE IRON VALVES AND METALLIC FITTINGS SHALL BE WRAPPED WITH TWO LAYERS OF 8 MIL POLYETHYLENE WRAP. NO BENDING OF POLYVINYL CHLORIDE PIPES SHALL BE PERMITTED. THE INSTALLATION OF PVC PIPES, ACCORDING TO THE PLANS AND SPECIFICATIONS AS BID ON BY THE CONTRACTOR, MAY REQUIRE ADDITIONAL DESIGN WORK, ADDITIONAL FITTINGS AND SPECIAL COUPLINGS SHALL BE CONSIDERED INCIDENTAL TO THE UNIT PRICE BID IN THE PROPOSAL FOR PVC PIPE. ANY ADDITIONAL DESIGN WORK SHALL BE THE RESPONSIBILITY OF THE CONTRACTOR. COPPER TONING WIRE SHALL BE INSTALLED ALONG THE ENTIRE LENGTH OF THE PIPELINE AND ALL NON-METALLIC LATERALS.

WATER NOTES (CONT.)

29. ALL POLYVINYL CHLORIDE (PVC) PIPE DEFLECTIONS SHALL BE ACCOMPLISHED ONLY BY THE USE OF SPECIAL PVC DEFLECTION COUPLINGS. DEFLECTION AROUND CURVES SHALL BE ACCOMPLISHED ONLY BY THE USE OF PVC DEFLECTION COUPLINGS.
30. ALL PVC FITTINGS SHALL CONFORM TO AMERICAN WATER WORKS ASSOCIATION (AWWA) C-907. DUCTILE IRON FITTINGS SHALL BE USED FOR ALL TYPES OF FITTINGS NOT SPECIFIED IN AWWA C-907.
31. REACTION BLOCK REQUIREMENTS FOR PVC FITTINGS SHALL BE THE SAME FOR DUCTILE IRON FITTINGS.
32. THE USE OF HUB CLAMPS AND SET SCREWS ON PVC FITTINGS IS NOT APPROVED.
33. PRIOR TO THE PVC FITTING INSTALLATION, THE CONTRACTOR SHALL SUBMIT FOR APPROVAL BY THE BWS, THE MANUFACTURER'S CERTIFICATION THAT ALL PVC FITTINGS CONFORM TO AWWA C-907.
34. FOR CUT-IN CONNECTIONS TO EXISTING:

    "ALL WATERLINE CONNECTION REQUIRING SHUTDOWN CONNECTION SHALL BE SCHEDULED FOR AFTER WORKING HOURS AT 6 HOURS MAXIMUM DOWNTIME."
35. THE CONTRACTOR SHALL FOLLOW THE FOLLOWING REVISED CHLORINATION AND WATER SAMPLING PROCEDURES:
    A. THE FOLLOWING CHLORINATION AND WATER SAMPLE COLLECTION PROCEDURE SHALL APPLY TO ALL WATER PIPELINE PROJECTS:

       STEP 1: CHLORINATE MAIN BY FILLING WITH WATER AND INTRODUCING CHLORINE IN SUFFICIENT QUANTITY TO OBTAIN A MINIMUM CHLORINE CONCENTRATION OF 50 PARTS PER MILLION (PPM). LEAVE CHLORINATED WATER IN MAIN OVERNIGHT.

       STEP 2: FLUSH MAIN WITH FRESH WATER UNTIL ALL CHLORINE HAS BEEN FLUSHED OUT AS EVIDENCED BY THE ORTHO-TOLIDINE TEST, THEN COLLECT A WATER SAMPLE WHILE CONTINUING TO FLUSH THE MAIN.

       STEP 3: REPEAT STEPS 1 AND 2. AFTER COLLECTING THE SECOND WATER SAMPLE, STOP FLUSHING AND ALLOW THE WATER TO STAND IN THE MAIN OVERNIGHT.

       STEP 4: THOROUGHLY FLUSH THE MAIN WITH FRESH WATER UNTIL ALL WATER THAT HAD BEEN STANDING IN THE MAIN OVERNIGHT HAS BEEN FLUSHED OUT. STOP FLUSHING AND LET THE WATER STAND IN THE MAIN FOR ONE HOUR. COLLECT A WATER SAMPLE.

    B. THE MAIN IS DEEMED ACCEPTABLE AND CERTIFIED WHEN (1) TWO CONSECUTIVE WATER SAMPLES, COLLECTED 24 HOURS APART UNDER STEPS 1 AND 2, SHOW NO TOTAL AND FECAL COLIFORM AND LESS THAN 200 COLONY FORMING UNITS (CFU) OF TOTAL BACTERIA AND (2) THE SAMPLE OF WATER HELD IN THE MAIN FOR ONE HOUR, COLLECTED UNDER STEP 4, ALSO SHOWS NO TOTAL AND FECAL COLIFORM AND LESS THAN 200 CFU OF TOTAL BACTERIA.

    C. CHLORINATION, FLUSHING, SAMPLING AND TESTING WILL BE EXTENDED SHOULD UNSATISFACTORY RESULTS BE ENCOUNTERED. ANY SAMPLE THAT SHOWS POSITIVE COLIFORM PRESENCE OR TOTAL BACTERIA GREATER THAN 200 CFU IS UNSATISFACTORY.

    D. STEPS 1 AND 2 MAY BE REPEATED BEFORE COLLECTING THE ONE HOUR HOLD SAMPLE SPECIFIED IN STEP 4, REPEATING STEPS 1 AND 2 IS RECOMMENDED IN THE EVENT SAMPLES SHOW THE PRESENCE OF COLIFORMS AND/OR INCREASING TOTAL BACTERIAL RESULTS FROM ONE SAMPLE TO THE NEXT.

    E. WATER SAMPLES THAT SHOW THE PRESENCE OF ATYPICAL COLONIES, DEBRIS OR RESULTS INCONSISTENT WITH EXISTING WATER ARE SUBJECT TO RECONFIRMATION. BWS RESERVES THE RIGHT TO REQUEST AND TEST ADDITIONAL WATER SAMPLES IN THE INTEREST OF SAFEGUARDING PUBLIC HEALTH AND SAFETY.
36. THE CONTRACTOR SHALL COORDINATE THE SECURING OF EXISTING WATER SYSTEM WITH THE BWS PRIOR TO EXCAVATING BEHIND OR REMOVING ANY EXISTING THRUST BLOCKS, STRUCTURAL STRUTS OR REACTION BEAMS, OR ANY FITTINGS SUCH AS TEES, PLUGS, CAPS, BENDS, OFFSETS, AND VALVES, OR ANY OTHER PIPELINE APPURTENANCE. THE CONTRACTOR SHALL BE RESPONSIBLE FOR ALL ASSOCIATED DAMAGES RESULTING FROM FAILURE TO ADEQUATELY SECURE THE EXISTING SYSTEM.
37. BOARD OF WATER SUPPLY APPROVAL OF THESE PLANS DOES NOT CONSTITUTE A WATER COMMITMENT. AVAILABILITY OF WATER WILL BE DETERMINED WHEN BUILDING PERMIT IS PRESENTED TO THE DEPARTMENT. WATER COMMITMENT WILL DEPEND UPON THE STATUS OF THE WATER SYSTEM AT THAT TIME. SHOULD WATER SERVICE BE MADE AVAILABLE, THE WATER COMMITMENT WILL BE EFFECTIVE WHEN THE PROJECT RECEIVES AN APPROVED BUILDING PERMIT FROM THE BUILDING DEPARTMENT. ALL WATER COMMITMENTS WILL BE CANCELED IN THE EVENT THE BUILDING PERMIT IS CANCELED.

IRRIGATION NOTES (PRIVATE)

1. UNLESS OTHERWISE SPECIFIED, ALL MATERIALS AND CONSTRUCTION OF WATER SYSTEM FACILITIES AND APPURTENANCES SHALL BE IN ACCORDANCE WITH THE CITY AND COUNTY OF HONOLULU BOARD OF WATER SUPPLY'S "WATER SYSTEM STANDARDS", VOLUME 1, DATED 1985, THE "APPROVED MATERIAL LIST AND STANDARD DETAILS FOR WATER SYSTEM CONSTRUCTION," VOLUME 2, DATED 1985, THE "WATER SYSTEM EXTERNAL CORROSION CONTROL STANDARDS," VOLUME 3 DATED 1991, AND ALL SUBSEQUENT AMENDMENTS AND ADDITIONS.
2. TEST PRESSURE SHALL BE 150 PSI
3. THE EXISTENCE AND LOCATION OF UNDERGROUND UTILITIES AND STRUCTURE SHOWN ON THE PLANS ARE FROM THE LATEST AVAILABLE DATA BUT IS NOT GUARANTEED AS TO THE ACCURACY OR THE ENCOUNTERING OF OTHER OBSTACLES DURING THE COURSE OF THE WORK. THE CONTRACTOR SHALL BE RESPONSIBLE AND PAY FOR ALL DAMAGES TO EXISTING UTILITIES. THE CONTRACTOR SHALL NOT ASSUME THAT WHERE NO UTILITIES ARE SHOWN, THAT NONE EXIST.
4. THE CONTRACTOR SHALL BE RESPONSIBLE FOR THE PROTECTION OF ALL WATER LINES DURING CONSTRUCTION. THE CONTRACTOR SHALL BE ESPECIALLY CAREFUL WHEN EXCAVATING BEHIND WATER LINES, TEES, AND BENDS WHEREVER THERE IS A POSSIBILITY OF WATER LINE MOVEMENT DUE TO THE REMOVAL OF THE SUPPORTING EARTH BEYOND THE EXISTING REACTION BLOCKS. THE CONTRACTOR SHALL TAKE WHATEVER MEASURE NECESSARY TO PROTECT THE WATER LINES, SUCH AS CONSTRUCTING SPECIAL REACTION BLOCKS (WITH BWS APPROVAL) AND/OR MODIFYING HIS CONSTRUCTION METHOD.
5. THREE-INCH WIDE WARNING TAPE, PURPLE IN COLOR, WITH THE WORDS "CAUTION NON-POTABLE WATER - DO NOT DRINK" IMPRINTED IN INTERVALS NOT GREATER THAN FIVE FEET SHALL BE INSTALLED DIRECTLY ON THE TOP OF ALL IRRIGATION/NON-POTABLE LATERALS, PVC PIPES NOT MARKED NON-POTABLE, AND DUCTILE IRON PIPES. THE WARNING TAPE SHALL BE INSTALLED LONGITUDINALLY AND CONTINUOUSLY OVER THE ENTIRE LENGTH OF PIPE AND SHALL BE FASTENED TO THE PIPE WITH FIBER REINFORCED TAPE AT 8 FEET ON CENTERS. LETTERS SHALL BE A MINIMUM OF 3/4 INCH HIGH.
6. INTERCONNECTION BETWEEN IRRIGATION/NON-POTABLE AND POTABLE MAINS SHALL NOT BE ALLOWED, UNLESS APPROVED BY THE BWS.
7. HORIZONTAL CLEARANCE OF 3-FEET AND VERTICAL CLEARANCE OF 6-INCHES SHALL BE MAINTAINED BETWEEN IRRIGATION/NON-POTABLE AND OTHER PIPELINES.
8. PVC C900 PIPE SHALL BE IN COMPLIANCE WITH AWWA C900, 4-INCH TO 12-INCH. ALL NON-POTABLE C900 PVC MAINS SHALL BE MARKED ON OPPOSITE SIDES TO READ "CAUTION NON-POTABLE WATER - DO NOT DRINK" IN INTERVALS NOT GREATER THAN FIVE FEET. LETTERS SHALL BE A MINIMUM OF 3/4 INCHES HIGH. NON-POTABLE C900 PVC MAINS MAY BE PURPLE IN COLOR.
9. PRIOR TO EXCAVATING, THE CONTRACTOR SHALL VERIFY IN THE FIELD THE LOCATION OF EXISTING WATER MAINS AND APPURTENANCES.

HECO NOTES

1. LOCATION OF HECO FACILITIES:

   THE LOCATION OF HECO'S OVERHEAD AND UNDERGROUND FACILITIES SHOWN ON THE PLANS ARE FROM EXISTING RECORDS WITH VARYING DEGREES OF ACCURACY AND ARE NOT GUARANTEED AS SHOWN. THE CONTRACTOR SHALL EXERCISE EXTREME CAUTION WHENEVER CONSTRUCTION CROSSES OR IS IN CLOSE PROXIMITY OF UNDERGROUND LINES AND SHALL MAINTAIN ADEQUATE CLEARANCE WHEN OPERATING WITHIN OR UNDER ANY OVERHEAD LINES.
2. COMPLIANCE WITH DOSH:

   THE CONTRACTOR SHALL COMPLY WITH THE STATE OF HAWAII'S OCCUPATIONAL SAFETY AND HEALTH LAW (DOSH).
3. EXCAVATION PERMIT:

   THE CONTRACTOR SHALL OBTAIN AN EXCAVATION PERMIT FROM HECO'S TECHNICAL DIVISION (543-5854) LOCATED AT 820 WARD AVENUE, 4TH FLOOR, TWO WEEKS PRIOR TO STARTING CONSTRUCTION. PLEASE REFER TO OUR REQUEST NUMBER AT THE TIME.
4. UNDERGROUND LINES:

   FOR VERIFICATION OF UNDERGROUND LINES OR FOR ASSISTANCE IN SUPPORTING AND PROTECTING THESE LINES, THE CONTRACTOR SHALL CALL HECO'S UNDERGROUND DIVISION AT 543-7971 A MINIMUM OF 72 HOURS IN ADVANCE.
5. EXCAVATIONS:

   WHEN TRENCH EXCAVATION IS ADJACENT TO OR BENEATH OUR EXISTING STRUCTURES OR FACILITIES, THE CONTRACTOR IS RESPONSIBLE FOR:

   A. SHEETING AND BRACING THE EXCAVATION TO PREVENT SLIDES, CAVE-INS, AND SETTLEMENTS.

   B. PROTECTING EXISTING STRUCTURES OR FACILITIES WITH BEAMS, STRUTS, OR UNDERPINNINGS.
6. POLE BRACING:

   FOR POLE BRACING INSTRUCTIONS, THE CONTRACTOR SHALL CALL THE HECO DISTRICT SUPERINTENDENT AT (KOOLAU 261-8084, WAIAU 543-4223, WARD 53-7745) A MINIMUM OF 72 HOURS IN ADVANCE.
7. RELOCATION OF HECO FACILITIES:

   ANY WORK REQUIRED TO RELOCATE HECO FACILITIES SHALL BE DONE BY HECO AND THE CONTRACTOR SHALL BE RESPONSIBLE FOR ALL COORDINATION, AND FOR POSSIBLE COSTS IF APPLICABLE.
8. TEMPORARY RELOCATION OF HECO FACILITIES:

   SHOULD IT BECOME NECESSARY TO TEMPORARILY RELOCATE ANY OF HECO FACILITES TO ENABLE THE CONTRACTOR TO PERFORM HIS WORK IN A SAFE AND EXPEDITIOUS MANNER IN FULFILLING HIS CONTRACT OBLIGATIONS, THESE TEMPORARY RELOCATIONS WILL BE DONE BY HECO, OR BY THE CONTRACTOR UNDER HECO'S SUPERVISION, WITH ALL COSTS BORNE BY THE CONTRACTOR
9. UNFORESEEN CONFLICTS:

   ANY UNFORESEEN CONFLICT THAT WOULD RESULT IN THE REDESIGN OR RELOCATION (EITHER TEMPORARY OR PERMANENT) OF HECO'S ELECTRICAL FACILITIES MAY BE CAUSE FOR LENGTHY DELAYS. TO AVOID SUCH DELAYS, THE CONTRACTOR MUST NOTIFY HECO OF THE CONFLICT A MINIMUM OF 30 DAYS PRIOR TO THE START OF CONSTRUCTION.
10. DAMAGE OF HECO FACILITIES:

    ANY DAMAGE OF HECO'S FACILITIES WILL BE REPORTED IMMEDIATELY TO HECO'S TROUBLE DISPATCHER AT 548-7961.
11. LIABILITY FOR DAMAGES TO HECO FACILITIES:

    ALL HECO OVERHEAD AND UNDERGROUND FACILITIES SHALL BE PROTECTED AT ALL TIMES BY THE CONTRACTOR DURING CONSTRUCTION. COSTS FOR DAMAGES TO HECO FACILITIES SHALL BE BORNE BY THE CONTRACTOR. THIS REPAIR WORK SHALL BE DONE BY HECO, OR BY THE CONTRACTOR UNDER HECO'S SUPERVISION.
12. INDEMNITY:

    THE CONTRACTOR SHALL INDEMNIFY, DEFEND AND HOLD HARMLESS HECO FROM AND AGAINST ALL LOSSES, DAMAGES, CLAIMS AND ACTIONS, INCLUDING BUT NOT LIMITED TO REASONABLE ATTORNEY'S FEES AND COSTS BASED UPON OR ARISING OUT OF DAMAGE TO PROPERTY OR INJURIES TO PERSONS, OR OTHER TORTUOUS ACTS CAUSED OR CONTRIBUTED BY THE CONTRACTOR OR ANYONE ACTING UNDER ITS DIRECTION OR CONTROL OR ON ITS BEHALF; PROVIDED CONTRACTOR'S INDEMNITY SHALL NOT BE APPLICABLE TO ANY LIABILITY BASED UPON THE SOLE NEGLIGENCE OF HECO.

APPROVED: DATE:

Catherine R. Dunaca — 7-14-00

for Chief, Planning & Engineering, BWS

REVISION	DATE	DESCRIPTION	MADE BY	APPROVED

Planning - Engineering - Environmental Services - Photogrammetry - Surveying - Construction Management

R. M. TOWILL CORPORATION

808 842 1133 420 Waiakamilo Road Suite 411 Honolulu Hawaii 96817-4941

GREG H. HIYAKUMOTO LICENSED PROFESSIONAL ENGINEER No. 6662-C HAWAII, U.S.A.

THIS WORK WAS PREPARED BY ME OR UNDER MY SUPERVISION.

BY: R. M. TOWILL CORPORATION

HAWAII COMMUNITY DEVELOPMENT AUTHORITY
STATE OF HAWAII
HONOLULU, HAWAII

KAKA'AKO COMMUNITY DEVELOPMENT DISTRICT
IMPROVEMENT DISTRICT 9
ILALO STREET IMPROVEMENTS

CONSTRUCTION NOTES-2

ENGINEER: GT CHECKED BY: GH

DRAFTSMAN: GT DATE: JULY 13, 2000

EXECUTIVE DIRECTOR, HAWAII COMMUNITY DEVELOPMENT AUTHORITY

FILE	POCKET	FOLDER	NO.

"RECORD DRAWINGS" G-4 SHEET 4 OF 140 SHEETS

NOTES FOR CONSTRUCTION WITHIN STATE RIGHT-OF-WAY

1. THE CONTRACTOR SHALL OBTAIN A PERMIT TO PERFORM WORK UPON STATE HIGHWAYS FROM THE OAHU DISTRICT ENGINEER, STATE HIGHWAYS, AT 727 KAKOI STREET, PRIOR TO COMMENCEMENT OF WORK WITHIN THE STATE'S HIGHWAY RIGHT-OF-WAY.

2. CONSTRUCTION AND RESTORATION OF ALL EXISTING HIGHWAY FACILITIES WITHIN THE STATE'S RIGHT-OF-WAY SHALL BE DONE IN ACCORDANCE WITH ALL APPLICABLE SECTIONS OF THE CURRENT STANDARD SPECIFICATIONS FOR ROAD, BRIDGE AND PUBLIC WORK CONSTRUCTION, AND THE SPECIFICATIONS FOR INSTALLATION OF MISCELLANEOUS IMPROVEMENTS WITHIN STATE HIGHWAYS, OF THE STATE HIGHWAYS DIVISION.

3. WORK MAY BE PERFORMED ONLY BETWEEN THE HOURS OF 8:30 AM AND 3:00 PM, MONDAY THROUGH FRIDAY, EXCEPT HOLIDAYS, UNLESS OTHERWISE PERMITTED BY THE DISTRICT ENGINEER.

   DURING WORK HOURS, ONLY ONE LANE OF TRAFFIC SHALL BE CLOSED, UNLESS OTHERWISE APPROVED IN WRITING BY THE DISTRICT ENGINEER.

4. THE CONTRACTOR SHALL PROVIDE, INSTALL, AND MAINTAIN ALL NECESSARY SIGNS, LIGHTS, FLARES, BARRICADES, MARKERS, CONES, AND OTHER PROTECTIVE FACILITIES, AND SHALL TAKE ALL NECESSARY PRECAUTIONS FOR THE PROTECTION, CONVENIENCE, AND SAFETY OF PUBLIC TRAFFIC. ALL SUCH PROTECTIVE FACILITIES AND PRECAUTIONS TO BE TAKEN SHALL CONFORM WITH THE "ADMINISTRATIVE RULES OF HAWAII GOVERNING THE USE OF TRAFFIC CONTROL DEVICES AT WORK SITES ON OR ADJACENT TO PUBLIC STREETS AND HIGHWAYS," ADOPTED BY THE DIRECTOR OF TRANSPORTATION, AND THE CURRENT U.S. FEDERAL HIGHWAYS ADMINISTRATION "MANUAL ON UNIFORM TRAFFIC CONTROL DEVICES FOR STREETS AND HIGHWAYS, PART VI - STANDARD AND GUIDES FOR TRAFFIC CONTROLS FOR STREET AND HIGHWAY CONSTRUCTION, MAINTENANCE, UTILITY AND EMERGENCY OPERATIONS." IF LANE CLOSURES ARE REQUIRED DURING CONSTRUCTION, A TRAFFIC CONTROL PLAN SHALL BE INCORPORATED INTO THE CONSTRUCTION PLANS AND MUST BE APPROVED BY THE DIVISION PRIOR TO THE ISSUANCE OF THE PERMIT.

5. THE MINIMUM PAVEMENT STRUCTURE SHALL CONSIST OF:

   A. RESIDENTIAL DRIVEWAYS

      (1) 2" ASPHALT CONCRETE (MIX IV) AND 6" AGGREGATE BASE COURSE, OR 2" ASPHALT CONCRETE AND 2-1/2" ASPHALT CONCRETE BASE COURSE OR ASPHALT CONCRETE.

      (2) 4" CLASS "A" CONCRETE REINFORCED WITHIN 6" X 6" - W2.9 X W2.9 WIRE MESH ON 12" AGGREGATE SUBBASE, IF DEEMED NECESSARY BY THE ENGINEER.

   B. COMMERCIAL DRIVEWAYS, SIDE ROADS, AND UTILITY INSTALLATION ON MINOR HIGHWAYS

      (1) 2-1/2" ASPHALT CONCRETE (MIX IV), 8" AGGREGATE BASE COURSE AND 12" SUBBASE, OR 2-1/2" ASPHALT CONCRETE AND 8" ASPHALT CONCRETE BASE COURSE OR ASPHALT CONCRETE.

      (2) 8" OF CLASS "A" CONCRETE REINFORCED WITH 6" X 6" - W2.9 X W2.9 WIRE MESH ON 12" AGGREGATE SUBBASE, IF DEEMED NECESSARY BY THE ENGINEER.

   C. CHANNELIZED INTERSECTIONS AND UTILITY INSTALLATIONS ON MAJOR HIGHWAYS

      4" ASPHALT CONCRETE (MIX IV), 8" AGGREGATE BASE COURSE AND 12" AGGREGATE SUBBASE, OR 4" ASPHALT CONCRETE AND 8" ASPHALT CONCRETE BASE COURSE OR ASPHALT CONCRETE, OR MATCH EXISTING PAVEMENT STRUCTURE, WHICHEVER IS GREATER.

6. NO MATERIAL AND/OR EQUIPMENT SHALL BE STOCKPILED OR OTHERWISE STORED WITHIN THE HIGHWAY RIGHT-OF-WAY, EXCEPT AT LOCATIONS DESIGNATED IN WRITING AND APPROVED BY THE DISTRICT ENGINEER.

7. COMPACTION TESTS SHALL BE TAKEN IN ACCORDANCE WITH THE SPECIFICATIONS FOR INSTALLATION OF MISCELLANEOUS IMPROVEMENTS WITHIN STATE HIGHWAYS, AS FOLLOWS:

   A. SUBBASE: ONE (1) COMPACTION TEST PER LIFT PER 200 LINEAL FEET OF ROADWAY.

   B. BASE COURSE: ONE (1) COMPACTION TEST PER LIFT PER 200 LINEAL FEET OF ROADWAY.

   C. ONE (1) COMPACTION TEST PER LIFT PER 300 LINEAL FEET OF TRENCH.

   D. A COPY OF THE TEST RESULTS SHALL BE SUBMITTED TO THE DISTRICT ENGINEER.

8. PRIOR TO COMMENCING, TRENCH EXCAVATION WORK, THE CONTRACTOR SHALL TAKE A PROFILE ALONG THE CENTERLINE OF THE PROPOSED UTILITY TRENCH. THIS INFORMATION SHALL BE USED IN THE VERIFICATION OF RESTORING THE ROADWAY TO ITS ORIGINAL CONDITION. A COPY OF THE PROFILE SHALL BE SUBMITTED TO THE DISTRICT ENGINEER.

9. THE CONTRACTOR SHALL PROVIDE AN ADEQUATE AND SAFE NON-SKID BRIDGING MATERIAL, INCLUDING SHORING, OVER TRENCHES IN PAVEMENT AREAS. THE BRIDGING SHALL BE ABLE TO SUPPORT ALL TYPES OF VEHICULAR TRAFFIC.

10. UNLESS OTHERWISE NOTED, NO TRENCH SHALL BE OPENED MORE THAN 300 FEET IN ADVANCE OF INSTALLED AND TEST PIPELINE AND/OR DUCTLINE.

11. EXISTING DRAINAGE SYSTEMS SHALL BE FUNCTIONAL AT ALL TIMES.

12. THE CONTRACTOR SHALL EXERCISE CARE TO MINIMIZE DAMAGES TO EXISTING HIGHWAY IMPROVEMENTS. ALL DAMAGES SHALL BE REPAIRED BY THE CONTRACTOR, AT HIS EXPENSE, TO THE SATISFACTION OF THE DISTRICT ENGINEER.

13. APPROVAL OF PERMIT CONSTRUCTION PLANS SHALL BE VALID FOR A PERIOD OF ONE (1) YEAR FROM THE DATE OF NOTIFICATION OF APPROVAL TO THE APPLICANT. IN THE EVENT CONSTRUCTION DOES NOT COMMENCE WITHIN THIS ONE-YEAR PERIOD THE APPLICANT WILL BE REQUIRED TO RESUBMIT THE CONSTRUCTION PLANS FOR THE DIVISION'S REVIEW AND APPROVAL.

14. ALL REGULATORY, GUIDE, AND CONSTRUCTION SIGNS AND BARRICADES SHALL HAVE A HIGH-INTENSITY REFLECTIVE BACKGROUND.

15. THE CONTRACTOR SHALL INFORM THE STATE HIGHWAYS' PERMIT OFFICE (831-6712) AT LEAST TWO (2) DAYS PRIOR TO CLOSING OF ANY LANES.

16. DRIVEWAYS SHALL BE KEPT OPEN UNLESS THE OWNERS OF THE PROPERTIES USING THESE RIGHTS-OF-WAY ARE OTHERWISE PROVIDED FOR SATISFACTORILY.

17. WHERE PEDESTRIAN WALKWAYS EXIST THEY SHALL BE MAINTAINED IN A SAFE AND PASSABLE CONDITION, OR OTHER FACILITIES FOR PEDESTRIANS SHALL BE PROVIDED. PASSAGES BETWEEN WALKWAYS AT INTERSECTIONS SHALL LIKEWISE BE PROVIDED.

18. THE CONTRACTOR SHALL REFERENCE, TO THE SATISFACTION OF THE DISTRICT ENGINEER, ALL EXISTING TRAFFIC SIGNS, POSTS, AND PAVEMENT MARKINGS PRIOR TO THE COMMENCEMENT OF CONSTRUCTION. THE CONTRACTOR SHALL REPLACE OR REPAIR ALL TRAFFIC SIGNS, POSTS, AND PAVEMENT MARKINGS DISTURBED BY HIS ACTIVITIES, AT HIS EXPENSE, UNLESS DIRECTED OTHERWISE BY THE DISTRICT ENGINEER OR HIS REPRESENTATIVE.

19. THE CONTRACTOR SHALL EXERCISE CARE WHEN PERFORMING WORK IN, ON, OR ADJACENT TO THE STATE HIGHWAY RIGHT-OF-WAY. DAMAGES TO THE EXISTING FACILITIES SHALL BE IMMEDIATELY REPORTED TO THE RESPECTIVE UTILITY COMPANIES, AND/OR CITY OR STATE AGENCIES. THE REPAIR WORK SHALL BE DONE AT THE CONTRACTOR'S EXPENSE.

20. THE CONTRACTOR SHALL NOTIFY THE STATE HIGHWAYS' HIGHWAY LIGHTING AND TRAFFIC SIGNAL SUPERVISOR (834-4581), THREE (3) WORKING DAYS PRIOR TO COMMENCING WORK.

NOTES FOR CONSTRUCTION WITHIN STATE RIGHT-OF-WAY, CONT.

21. TRAFFIC SIGNALS SHALL BE KEPT OPERATIONAL DURING CONSTRUCTION, AND IF DEEMED NECESSARY BY THE DISTRICT ENGINEER OR HIS REPRESENTATIVE, A TEMPORARY VEHICLE DETECTION DEVICE SHALL BE INSTALLED. ALL WORK SHALL BE DONE IN ACCORDANCE TO THE REQUIREMENTS OF THE DEPARTMENT OF TRANSPORTATION SERVICES, CITY AND COUNTY OF HONOLULU, AND PAID FOR BY THE CONTRACTOR.

22. THE CONTRACTOR SHALL NOTIFY OAHU TRANSIT SERVICES, INC. (OATS), ED SNIFFEN AT 848-4571, OR LOWELL TOM AT 848-4578, TWO WEEKS PRIOR TO COMMENCING ANY WORK. THE CONTRACTOR SHALL INFORM OATS OF THE LOCATION AND SCOPE OF WORK FOR PROPOSED CLOSURE OF ANY STREET OR TRAFFIC LANES, AND THE NEED TO RELOCATE ANY BUS STOP.

23. THE PERMIT TO PERFORM WORK UPON STATE HIGHWAYS MAY BE REVOKED BECAUSE OF THE DEFAULT IN ANY OF THE FOLLOWING, BUT NOT LIMITED TO, CONDITIONS:

   A. WORK PERFORMED BEFORE OR AFTER PERMITTED HOURS.

   B. FAILURE TO MAINTAIN ROADWAY SURFACES IN A SMOOTH AND SAFE CONDITION.

   C. FAILURE TO CLEAN UP CONSTRUCTION DEBRIS GENERATED FROM PROJECT WORK.

   D. FAILURE TO PROVIDE PROPER TRAFFIC CONTROL.

   E. FAILURE TO REPLACE DAMAGED PAVEMENT MARKINGS AND SIGNS.

24. THE CONTRACTOR SHALL NOTIFY THE STATE HIGHWAYS PERMIT OFFICE (831-6712) AT LEAST TWO DAYS PRIOR TO PERFORMING ANY TRENCH RESTORATION WORK. THIS WORK SHALL INCLUDE ANY BACKFILLING AND COMPACTING OF TRENCH MATERIAL; ANY PLACING AND COMPACTING OF BASE COURSE MATERIAL; AND ANY PAVING OPERATION. ANY TRENCH RESTORATION WORK PERFORMED BY THE CONTRACTOR THAT IS NOT WITNESSES BY A STATE REPRESENTATIVE WILL BE REQUIRED TO BE REMOVED AND RESTORED WITH A STATE REPRESENTATIVE PRESENT. ALL RESTORATION WORK WILL BE AT THE CONTRACTOR'S EXPENSE.

25. TEMPORARY COLD MIX TRENCH PATCHES WILL BE PERMITTED IN ANY GIVEN AREA FOR A MAXIMUM DURATION OF TWO WEEKS, AND SHALL BE A MINIMUM OF 2 INCHES THICK. ALL TEMPORARY PATCHES SHALL BE PLACE OVER PROPERLY COMPACTED BACKFILL AND BASE COURSE LAYERS. CONTRACTOR SHALL BE RESPONSIBLE FOR MAINTAINING ALL TEMPORARY PATCHES AND TO MAKE REPAIRS TO UNSATISFACTORY PATCHES WITHIN 24 HOURS.

26. THE CONTRACTOR WILL MAKE EVERY EFFORT TO MINIMIZE THE USE AND THE DURATION OF USE OF STEEL PLATES. ALL STEEL PLATES SHALL HAVE NON-SKID SURFACE. THE STATE MAY REQUIRE THE BACKFILLING AND PATCHES OF TRENCHES DUE TO THE EXCESSIVE USAGE OF STEEL PLATES.

TRAFFIC NOTES FOR WORK ON CITY AND COUNTY STREETS

1. A PERMIT SHALL BE OBTAINED FROM THE DEPARTMENT OF TRANSPORTATION SERVICES BEFORE WORK ON ANY PORTION OF A PUBLIC STREET OR HIGHWAY MAY BEGIN. CONSTRUCTION TRAFFIC CONTROL PLANS APPROVED BY THE DEPARTMENT OF TRANSPORTATION SERVICES AND/OR THE DEPARTMENT OF PLANNING AND PERMITTING MUST BE PROVIDED WHEN APPLYING FOR THE PERMIT

2. THE CONTRACTOR SHALL PROVIDE, INSTALL AND MAINTAIN ALL NECESSARY SIGNS AND OTHER PROTECTIVE FACILITIES, WHICH SHALL CONFORM WITH THE "HAWAII ADMINISTRATION RULES GOVERNING THE USE OF TRAFFIC CONTROL DEVICES AT WORK SITES ON OR ADJACENT TO PUBLIC STREETS AND HIGHWAY" ADOPTED BY THE DIRECTOR OF TRANSPORTATION, AND THE CURRENT U.S. FEDERAL HIGHWAY ADMINISTRATION'S "MANUAL ON UNIFORM TRAFFIC CONTROL DEVICES FOR STREETS AND HIGHWAYS, PART VI, TRAFFIC CONTROLS FOR STREET AND HIGHWAY CONSTRUCTION, MAINTENANCE, UTILITY AND EMERGENCY OPERATIONS."

3. WORK ON ANY CITY STREET AREA MAY BE PERFORMED ONLY BETWEEN THE HOURS OF 8:30 AM TO 3:30 PM, MONDAY THROUGH FRIDAY, UNLESS OTHERWISE PERMITTED BY THE DEPARTMENT OF TRANSPORTATION SERVICES.

4. DURING WORK HOURS, THE CONTRACTOR SHALL PROVIDE FOR THROUGH TRAFFIC. DURING NON-WORKING HOURS, ALL TRENCHES SHALL BE COVERED WITH A SAFE NON-SKID BRIDGING MATERIAL AND ALL LANES SHALL BE OPEN TO TRAFFIC.

5. AS REQUIRED BY THE DEPARTMENT OF TRANSPORTATION SERVICES, THE CONTRACTOR SHALL PROVIDE OFF-DUTY POLICE OFFICERS TO CONTROL THE FLOW OF TRAFFIC.

6. WHERE PEDESTRIAN WALKWAYS EXIST, THEY SHALL BE MAINTAINED IN PASSABLE CONDITION OR OTHER FACILITIES FOR PEDESTRIANS SHALL BE PROVIDED. PASSAGE BETWEEN WALKWAYS AT INTERSECTIONS SHALL LIKEWISE BE PROVIDED.

7. DRIVEWAYS SHALL BE KEPT OPEN UNLESS THE OWNERS OF THE PROPERTY USING THESE RIGHTS-OF-WAYS ARE OTHERWISE PROVIDED FOR SATISFACTORILY.

8. CONTRACTOR SHALL REFERENCE, TO THE APPROVAL OF THE DEPARTMENT OF TRANSPORTATION SERVICES AND THE DEPARTMENT OF PLANNING AND PERMITTING, ALL EXISTING TRAFFIC SIGNS, POSTS AND PAVEMENT MARKINGS PRIOR TO THE COMMENCEMENT OF CONSTRUCTION. THE CONTRACTOR SHALL REPLACE OR REPAIR ALL TRAFFIC SIGNS, POSTS AND PAVEMENT MARKINGS DISTURBED BY HIS ACTIVITIES. THE CONTRACTOR SHALL NOTIFY THE DEPARTMENT OF PLANNING AND PERMITTING AT 527-5087 ONE (1) WEEK PRIOR TO ANY WORK TO BE DONE ON SIGNS, POSTS AND PAVEMENT MARKINGS.

9. NO MATERIAL AND/OR EQUIPMENT SHALL BE STOCKPILED OR OTHERWISE STORED WITHIN STREET RIGHT-OF-WAY EXCEPT AT LOCATIONS DESIGNATED IN WRITING AND APPROVED BY THE DEPARTMENT OF TRANSPORTATION SERVICES.

10. THE CONSTRUCTION MANAGER SHALL ENSURE THAT THE CONTRACTOR INSTALLS THE CONSTRUCTION TRAFFIC CONTROL DEVICES IN ACCORDANCE WITH THE MUTCD AND HAR AS SPECIFIED IN NOTE #2.

11. ALL TRAFFIC LANES SHALL BE A MINIMUM OF TEN (10) FEET WIDE.

12. THE CONTRACTOR SHALL CONTACT THE DEPARTMENT OF TRANSPORTATION SERVICES, PARKING SECTION, AT LEAST TWO WORKING DAYS PRIOR TO ANY PARKING METER WORK.

TRAFFIC SIGNAL AND TECHNOLOGY DIVISION NOTES

1. THE CONTRACTOR SHALL NOTIFY THE TRAFFIC SIGNAL AND TECHNOLOGY DIVISION, DEPARTMENT OF TRANSPORTATION SERVICES, THREE (3) WORKING DAYS PRIOR TO COMMENCING WORK ON THE TRAFFIC SIGNAL SYSTEM (PHONE: 523-4589).

2. THE TRAFFIC SIGNAL SYSTEM SHALL BE KEPT OPERATIONAL DURING CONSTRUCTION. ANY RELOCATION REQUIRED SHALL BE APPROVED BY THE TRAFFIC SIGNAL AND TECHNOLOGY DIVISION, DEPARTMENT OF TRANSPORTATION SERVICES, AND PAID FOR BY THE CONTRACTOR.

3. THE CONTRACTOR SHALL BE RESPONSIBLE FOR ANY DAMAGES TO THE EXISTING TRAFFIC SIGNAL FACILITIES, INCLUDING THE TRAFFIC SIGNAL INTERCONNECT SYSTEM. ANY AND ALL DAMAGES TO THESE FACILITIES SHALL BE REPAIRED BY THE CONTRACTOR AT HIS COST IN ACCORDANCE WITH THE REQUIREMENT OF THE CITY AND COUNTY OF HONOLULU.

4. THE CONTRACTOR SHALL BE RESPONSIBLE FOR ANY DAMAGES TO THE EXISTING TRAFFIC SIGNAL FIBER OPTIC CABLE SYSTEM. ANY AND ALL DAMAGES TO THESE FACILITIES SHALL BE REPAIRED BY THE CONTRACTOR AT HIS COST IN ACCORDANCE WITH THE REQUIREMENTS OF THE CITY AND COUNTY OF HONOLULU.

SIGNS AND MARKING NOTES

1. ALL TRAFFIC SIGN AND PAVEMENT MARKING INSTALLATIONS SHALL BE DONE IN ACCORDANCE WITH THE "MANUAL ON UNIFORM TRAFFIC CONTROL DEVICES FOR STREETS AND HIGHWAYS," 1988 EDITION, AS AMENDED, THE LATEST SPECIFICATIONS FROM THE TRAFFIC REVIEW BRANCH, DEPARTMENT OF PLANNING AND PERMITTING, AND AS SHOWN ON THE PLANS.

2. CONTRACTOR SHALL NOTIFY AND COORDINATE WORK WITH THE CIVIL ENGINEERING BRANCH, DEPARTMENT OF PLANNING AND PERMITTING, ONE (1) WEEK IN ADVANCE OF COMMENCING WORK AT 523-4881.

3. CONTRACTOR SHALL SUBMIT MATERIAL BROCHURES FOR ALL SIGNS AND PAINT MATERIALS TO THE CIVIL ENGINEERING BRANCH, DEPARTMENT OF PLANNING AND PERMITTING.

4. THE SIGNING AND/OR STRIPING CONTRACTOR SHALL KEEP ONE (1) SET OF APPROVED PLANS AT THE PROJECT SITE AT ALL TIMES DURING CONSTRUCTION WORK.

5. CONTRACTOR SHALL PAINT TEMPORARY GUIDELINES AND OUTLINE OF ARROWS, LEGENDS, AND CROSSWALKS WITH A TWO INCH (2") WIDE BRUSHED LINE ON THE DAY THE ROADWAY IS OPENED TO TRAFFIC. THESE MARKINGS MUST BE APPROVED BY THE INSPECTOR FROM THE CIVIL ENGINEERING BRANCH, DEPARTMENT OF PLANNING AND PERMITTING.

6. CONTRACTOR SHALL NOTIFY THE CIVIL ENGINEERING BRANCH, DEPARTMENT OF PLANNING AND PERMITTING AT 523-4881, THREE (3) DAYS IN ADVANCE OF FINAL INSPECTION.

7. CONTRACTOR SHALL MEET WITH THE INSPECTOR FROM THE CIVIL ENGINEERING BRANCH, DEPARTMENT OF PLANNING AND PERMITTING DURING FINAL INSPECTION.

8. WITHIN TEN (10) DAYS FOLLOWING NOTIFICATION OF AWARD OF CONTRACT, THE CONTRACTOR SHALL SUBMIT TO THE DEPARTMENT OF PLANNING AND PERMITTING (PHONE: 523-4881) FOR APPROVAL, A LIST OF ANY SIGNING AND PAVEMENT MARKING MATERIAL WHICH HE PROPOSES TO INSTALL. THE LIST SHALL BE COMPLETE AS TO THE NAME OF MANUFACTURER, CATALOG NUMBER, AND SHALL BE SUPPLEMENTED WITH MATERIAL BROCHURES.

9. UPON FINAL INSPECTION OF THE PROJECT, THE CONTRACTOR SHALL SUBMIT A LETTER OF CERTIFICATION FOR ALL TRAFFIC SIGNING AND PAVEMENT MARKING MATERIALS INSTALLED.

10. SIGNS SHALL BE ATTACHED TO BRACKETS WITH 5/16" ZINC PLATED STEEL BOLTS, NUTS AND WASHERS. SIGNS 48" WIDE OR LARGER THAN 10 SQ. FT. IN AREA SHALL BE MOUNTED ON TWO 2" GALV. PIPE POST. THE SIGN SHALL BE INSTALLED WITH AT LEAST (1) ONE FOOT CLEARANCE FROM THE SIGN EDGE TO THE CURB FACE.

11. ALL TRAFFIC SIGNS SHALL BE REFLECTORIZED.

12. RAISED PAVEMENT MARKERS SHALL BE INSTALLED IN ACCORDANCE WITH THE DEPARTMENT OF PLANNING AND PERMITTING STANDARDS.

13. LOCATION OF "STOP" SIGN:

   A. INSTALL "STOP" SIGN AT CURB TANGENT POINT.

   B. INSTALL "STOP" SIGN ON METAL STREET LIGHT STANDARD IF A STANDARD IS LOCATED WITHIN 10 FEET OF CURB RETURN.

   C. INSTALL "STOP" SIGN IN FRONT OF UTILITY POLE IF A POLE IS LOCATED WITHIN 10 FEET OF CURB RETURN.

14. PAVEMENT WORD AND SYMBOL MARKINGS SHALL BE IN ACCORDANCE WITH THE DEPARTMENT OF PLANNING AND PERMITTING STANDARDS.

15. THE CONTRACTOR SHALL USE THERMOPLASTIC MATERIAL, APPROVED BY THE CIVIL ENGINEERING BRANCH, DEPARTMENT OF PLANNING AND PERMITTING, FOR ALL CROSSWALKS, STOP BARS, PAVEMENT ARROWS, CENTER LINES, LANE LINES, ARC LINES, CHANNELIZED TRAFFIC ISLANDS, AND LEGENDS.

MECHANICAL/ELECTRICAL DESIGN AND ENGINEERING DIVISION NOTES

1. THE CONTRACTOR SHALL NOTIFY THE JOINT POLE COMMITTEE TWO (2) WEEKS IN ADVANCE OF ANY RELOCATION OF UTILITY POLE(S) THAT MAY BE NECESSARY.

2. THE CONTRACTOR SHALL NOTIFY THE MECHANICAL/ELECTRICAL DESIGN AND ENGINEERING DIVISION, DEPARTMENT OF DESIGN AND CONSTRUCTION, THREE (3) WORKING DAYS PRIOR TO COMMENCING WORK ON THE STREET LIGHTING SYSTEM (PHONE: 523-4108).

3. THE STREET LIGHTING SYSTEM SHALL BE KEPT OPERATIONAL DURING CONSTRUCTION. ANY RELOCATION REQUIRED SHALL BE APPROVED BY THE MECHANICAL/ELECTRICAL DESIGN AND ENGINEERING DIVISION, DEPARTMENT OF DESIGN AND CONSTRUCTION, AND PAID FOR BY THE CONTRACTOR.

4. THE CONTRACTOR SHALL BE RESPONSIBLE FOR ANY DAMAGES TO THE EXISTING STREET LIGHTING FACILITIES. ANY AND ALL DAMAGES TO THESE FACILITIES SHALL BE REPAIRED BY THE CONTRACTOR AT HIS COST IN ACCORDANCE WITH THE REQUIREMENTS OF THE CITY AND COUNTY OF HONOLULU.

5. THE CONTRACTOR SHALL BE RESPONSIBLE FOR ANY DAMAGES TO THE CITY'S EXISTING COMMUNICATIONS FIBER OPTIC CABLE SYSTEM. ANY AND ALL DAMAGES TO THESE FACILITIES SHALL BE REPAIRED BY THE CONTRACTOR AT HIS COST IN ACCORDANCE WITH THE REQUIREMENTS OF THE CITY AND COUNTY OF HONOLULU.

HTCO NOTES

1. THE LOCATION OF GTE HAWAIIAN TELEPHONE COMPANY'S EXISTING FACILITIES ARE APPROXIMATE ONLY. THE CONTRACTOR SHALL EXERCISE EXTREME CAUTION AND SHALL MAINTAIN PROPER CLEARANCES WHENEVER CONSTRUCTION CROSSES OR IS IN CLOSE PROXIMITY OF GTE HAWAIIAN TELEPHONE COMPANY'S FACILITIES. THE CONTRACTOR SHALL VERIFY THEIR LOCATIONS AND SHALL BE LIABLE FOR ANY DAMAGES TO GTE HAWAIIAN TELEPHONE COMPANY FACILITIES. ANY DAMAGES SHALL BE REPORTED IMMEDIATELY TO GTE HAWAIIAN TELEPHONE COMPANY'S REPAIR SECTION AT 811 (24 HOURS) OR TO THE EXCAVATION PERMIT SECTION AT 483-8086 (NORMAL WORKING HOURS, MONDAY THROUGH FRIDAY, EXCEPT HOLIDAYS).

2. FOR UNDERGROUND CABLE LOCATING AND MARKING, FIVE WORKING DAYS ADVANCE NOTICE IS REQUIRED. THREE WORKING DAYS ADVANCE NOTICE IS REQUIRED FOR ANY INSPECTION BY A DESIGNATED REPRESENTATIVE.

HTCO NOTES (CONT.)

3. THE CONTRACTOR SHALL TAKE NECESSARY PRECAUTIONS NOT TO DAMAGE ANY EXISTING CABLES OR CONDUITS. ANY WORK INVOLVING EXISTING GTE HAWAIIAN TELEPHONE COMPANY CABLES OR CONDUITS, SHALL BE DONE IN THE PRESENCE OF A GTE HAWAIIAN TELEPHONE COMPANY INSPECTOR OR DESIGNATED REPRESENTATIVE.

4. THE CONTRACTOR SHALL OBTAIN AN EXCAVATION PERMIT AND TONING REQUEST FROM GTE HAWAIIAN TELEPHONE COMPANY'S EXCAVATION PERMIT SECTION, LOCATED AT 3239 UALENA STREET, THIRD FLOOR, TWO WEEKS PRIOR TO THE START OF CONSTRUCTION. HOURS OF BUSINESS IS 7:00 AM TO 10:30 AM AND 11:30 AM TO 3:00 PM MONDAY THROUGH FRIDAY, EXCEPT HOLIDAYS.

5. THE CONTRACTOR SHALL NOTIFY GTE HAWAIIAN TELEPHONE COMPANY'S INSPECTOR OR DESIGNATED REPRESENTATIVE A MINIMUM OF 72 HOURS PRIOR TO EXCAVATION, BRACING OR BACKFILLING OF GTE HAWAIIAN TELEPHONE COMPANY'S STRUCTURES OR FACILITIES.

6. WHEN EXCAVATION IS ADJACENT TO OR BENEATH GET HAWAIIAN TELEPHONE COMPANY'S EXISTING STRUCTURES OR FACILITIES, THE CONTRACTOR SHALL:

   A. SHEET AND/OR BRACE THE EXCAVATION TO PREVENT SLIDES, CAVE-INS OR SETTLEMENTS TO ENSURE NO MOVEMENT TO GTE HAWAIIAN TELEPHONE COMPANY'S STRUCTURES OR FACILITIES.

   B. PROTECT EXISTING STRUCTURES AND/OR FACILITIES WITH BEAMS, STRUTS OR UNDERPINNING WHILE EXCAVATING BENEATH THEM TO ENSURE NO MOVEMENT TO GTE HAWAIIAN TELEPHONE COMPANY'S STRUCTURES OR FACILITIES.

GAS NOTES

1. THE GAS COMPANY GAS PIPELINES IN THE PROJECT AREA ARE PLASTIC COATED AND CATHODICALLY PROTECTED. THE CONTRACTOR SHALL BE EXTREMELY CAREFUL WHEN WORKING NEAR THESE GAS PIPELINES.

2. WRITTEN CLEARANCES MUST BE OBTAINED FROM THE GAS COMPANY, MAPS AND RECORDS DEPARTMENT, 515 KAMAKEE STREET, AT LEAST FIVE (5) WORKING DAYS PRIOR TO STARTING EXCAVATION NEAR THESE GAS PIPELINES.

3. SINCE GAS LINE LOCATIONS ON FIELD MAPS ARE APPROXIMATE, THE CONTRACTOR, AFTER OBTAINING WRITTEN CLEARANCE, SHALL CALL USA NORTH A MINIMUM OF TWO (2) WORKING DAYS BEFORE STARTING EXCAVATION TO ARRANGE FOR FIELD LOCATION OF THE EXISTING GAS PIPELINES. THE TELEPHONE NUMBER IS 1-800-227-2600.

4. THE CONTRACTOR SHALL EXCAVATE AND BACKFILL AROUND GAS PIPELINES IN THE PRESENCE OF A REPRESENTATIVE OF THE GAS COMPANY. ALL BACKFILL WITHIN SIX INCHES OF ANY GAS PIPELINE SHALL BE SELECT CUSHION MATERIAL APPROVED BY THE GAS COMPANY.

5. FOR RELOCATION OF ANY GAS PIPELINE, THE CONTRACTOR SHALL NOTIFY THE GAS COMPANY FIVE (5) WORKING DAYS BEFORE STARTING WORK. THE TELEPHONE NUMBER IS 594-5574. THE CONTRACTOR SHALL PROVIDE THE NECESSARY EXCAVATION AND BACKFILL, OBTAIN TRAFFIC PERMITS, AND RESTORE PAVEMENT, SIDEWALKS, AND OTHER FACILITIES. ANY RELOCATION OF GAS FACILITIES SHALL BE DONE BY THE GAS COMPANY AND PAID FOR BY THE CONTRACTOR.

6. THE CONTRACTOR SHALL NOTIFY THE GAS COMPANY IMMEDIATELY AFTER ANY DAMAGE HAS BEEN CAUSED TO EXISTING GAS PIPELINES, COATINGS, OR ITS CATHODIC PROTECTION DEVICES. THE TELEPHONE NUMBER IS 535-5933, 24 HOURS A DAY. THE CONTRACTOR SHALL BE LIABLE FOR ANY DAMAGE TO THE GAS COMPANY FACILITIES. REPAIR WORK ON SUCH DAMAGE SHALL BE DONE BY THE GAS COMPANY WITH PAYMENT FOR THIS WORK TO BE BORNE BY THE CONTRACTOR.

7. MINIMUM VERTICAL AND HORIZONTAL CLEARANCE BETWEEN THE GAS PIPELINES AND OTHER PIPELINES, CONDUITS, DUCTLINES, OR OTHER FACILITIES SHALL BE 12 INCHES. ADEQUATE SUPPORT AND PROTECTION FOR GAS PIPELINES EXPOSED IN THE TRENCH SHALL BE PROVIDED BY THE CONTRACTOR AND APPROVED BY THE GAS COMPANY.

8. THE CONTRACTOR SHALL WORK IN AN EXPEDITIOUS MANNER IN ORDER TO KEEP THE UNCOVERED GAS PIPELINES EXPOSED FOR AS SHORT A PERIOD OF TIME AS POSSIBLE.

APPROVED:

Chief, Traffic Review Branch, DPP

DATE: 6/5/00

REVISION	DATE	DESCRIPTION	MADE BY	APPROVED

R. M. TOWILL CORPORATION
Planning - Engineering - Environmental Services - Photogrammetry - Surveying - Construction Management
808 842 1133 420 Waiakamilo Road Suite 411 Honolulu Hawaii 96817-4941

GREG H. HIYAKUMOTO LICENSED PROFESSIONAL ENGINEER No. 6662-C HAWAII, U.S.A.

THIS WORK WAS PREPARED BY ME OR UNDER MY SUPERVISION.

BY: Greg H. Hiyakumoto 4/14/00
R. M. TOWILL CORPORATION

HAWAII COMMUNITY DEVELOPMENT AUTHORITY
STATE OF HAWAII
HONOLULU, HAWAII

KAKA'AKO COMMUNITY DEVELOPMENT DISTRICT
IMPROVEMENT DISTRICT 9
ILALO STREET IMPROVEMENTS

CONSTRUCTION NOTES-3

ENGINEER: GT
DRAFTSMAN: GT
CHECKED BY: GH
DATE: JULY 13, 2000

EXECUTIVE DIRECTOR, HAWAII COMMUNITY DEVELOPMENT AUTHORITY

FILE	POCKET	FOLDER	NO.

"RECORD DRAWINGS" G-5 SHEET 5 OF 140 SHEETS

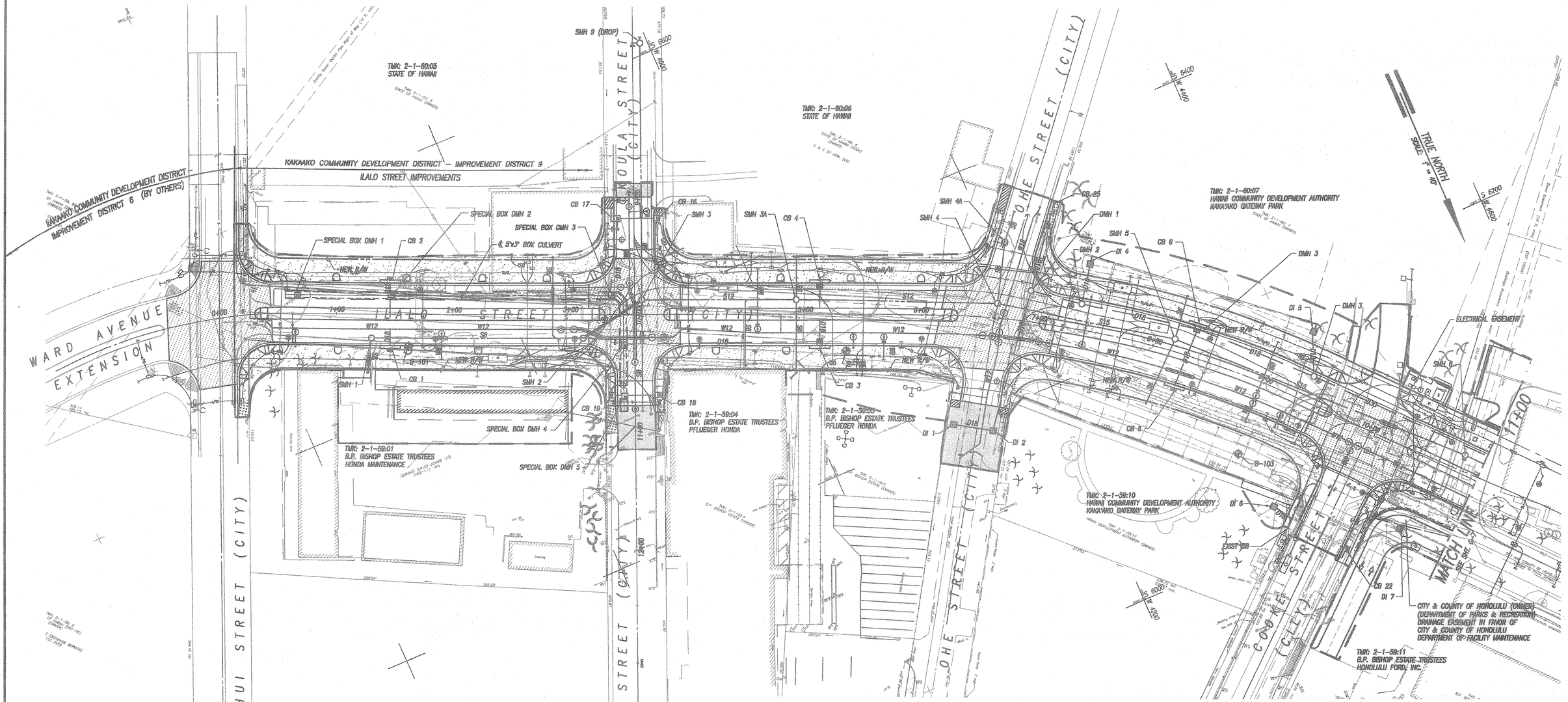

GENERAL SITE PLAN–1

SCALE: 1" = 40'

NOTE:
FOR LEGEND AND ABBREVIATIONS,
SEE SHEET G-2.

Approved:

for Chief, Planning & Engineering, BWS — 7-14-00 Date

Chief, Wastewater Branch, DPP ww — 7/25/00 Date

Chief, Civil Engineering Branch, DPP wr — 7/18/00 Date

GRAPHIC SCALES:

1"=40' 40 0 40 80

GREG H. HIYAKUMOTO
LICENSED PROFESSIONAL ENGINEER
No. 6662-C
HAWAII, U.S.A.

THIS WORK WAS PREPARED BY ME OR UNDER MY SUPERVISION.

BY: R.M. TOWILL CORPORATION 7/18/00

REVISION	DATE	DESCRIPTION	MADE BY	APPROVED

Planning – Engineering – Environmental Services – Photogrammetry – Surveying – Construction Management
R. M. TOWILL CORPORATION
808 842 1133 420 Waiakamilo Road Suite 411 Honolulu Hawaii 96817-4941

HAWAII COMMUNITY DEVELOPMENT AUTHORITY
STATE OF HAWAII
HONOLULU, HAWAII

KAKA'AKO COMMUNITY DEVELOPMENT DISTRICT
IMPROVEMENT DISTRICT 9
ILALO STREET IMPROVEMENTS

GENERAL SITE PLAN–1

ENGINEER: LSY CHECKED BY: GHH
DRAFTSMAN: HG DATE: JULY 13, 2000

EXECUTIVE DIRECTOR, HAWAII COMMUNITY DEVELOPMENT AUTHORITY

FILE	POCKET	FOLDER	NO.

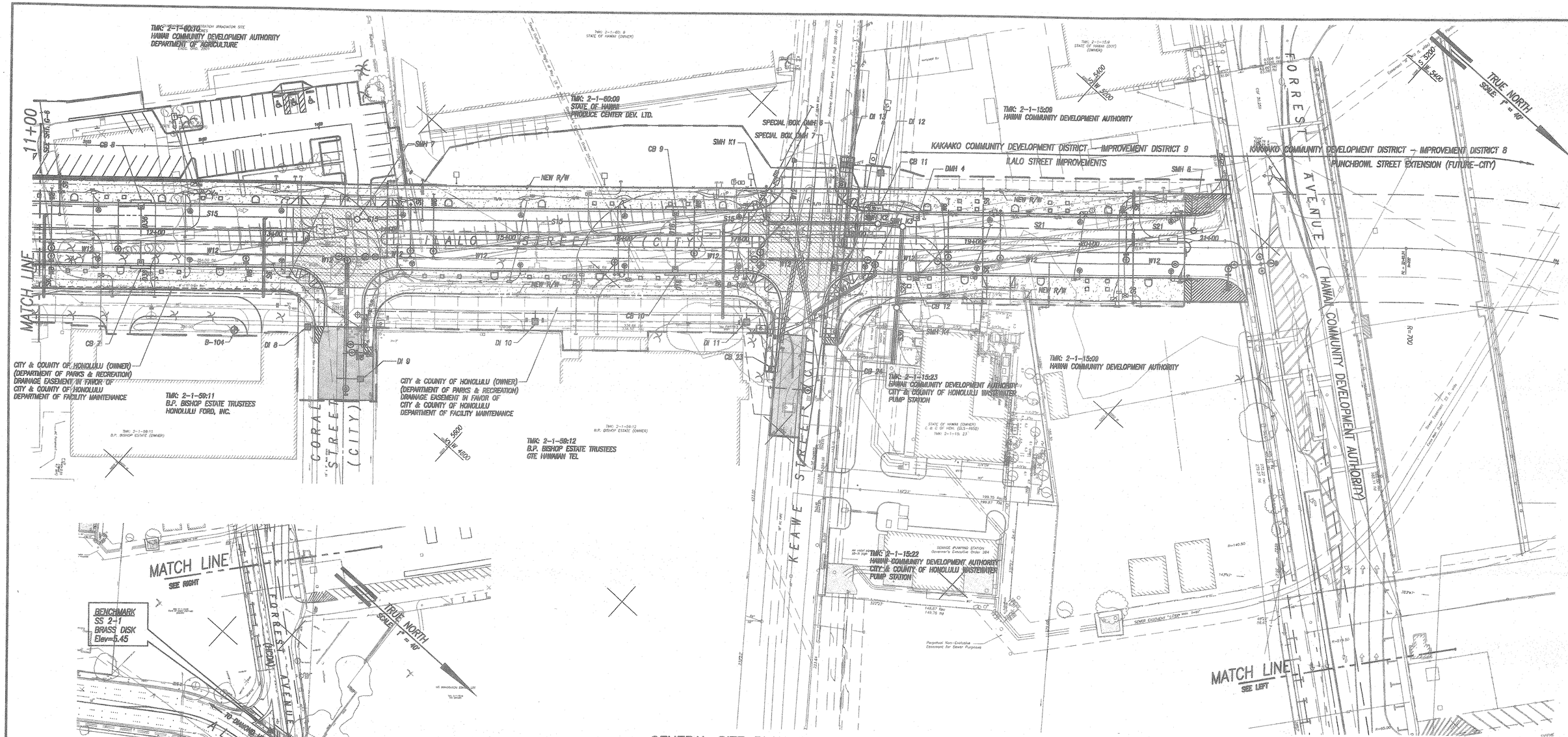

GENERAL SITE PLAN-2
SCALE: 1" = 40'

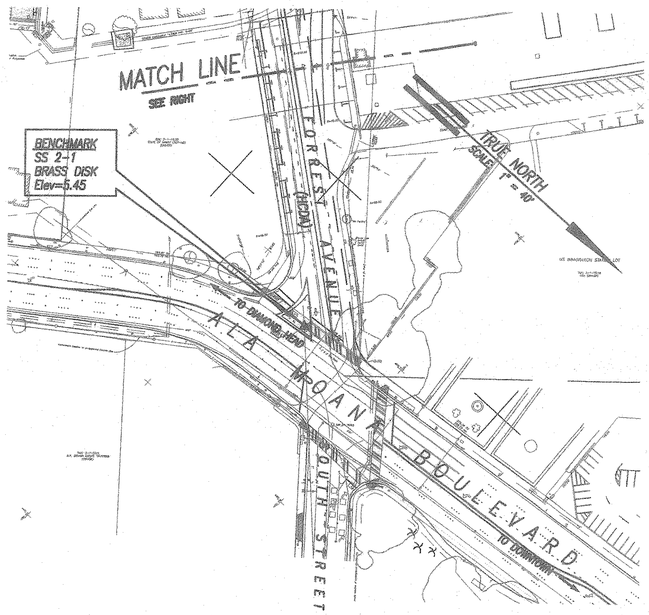

BENCH MARK LOCATION PLAN
SCALE: 1" = 80'

NOTE:
FOR LEGEND AND ABBREVIATIONS,
SEE SHEET G-2.

Approved:

Catherine R. Bungca — 7-14-00
for Chief, Planning & Engineering, BWS — Date

Dennis M. Nishimura — 7/25/00
Chief, Wastewater Branch, DPP — Date

M. [signature] — 7/18/00
Chief, Civil Engineering Branch, DPP — Date

GRAPHIC SCALES:
1"=40' 40 0 40 80

REVISION	DATE	DESCRIPTION	MADE BY	APPROVED

Planning - Engineering - Environmental Services - Photogrammetry - Surveying - Construction Management
R. M. TOWILL CORPORATION
808 842 1133 420 Waiakamilo Road Suite 411 Honolulu Hawaii 96817-4941

GREG H. HIYAKUMOTO
LICENSED PROFESSIONAL ENGINEER
No. 6652-C
HAWAII, U.S.A.

THIS WORK WAS PREPARED BY ME OR UNDER MY SUPERVISION.
BY: [signature] 7/14/00
R. M. TOWILL CORPORATION

HAWAII COMMUNITY DEVELOPMENT AUTHORITY
STATE OF HAWAII
HONOLULU, HAWAII
KAKA'AKO COMMUNITY DEVELOPMENT DISTRICT
IMPROVEMENT DISTRICT 9
ILALO STREET IMPROVEMENTS

GENERAL SITE PLAN-2

ENGINEER: LSY — CHECKED BY: GHH
DRAFTSMAN: HG — DATE: JULY 13, 2000

[signature]
EXECUTIVE DIRECTOR, HAWAII COMMUNITY DEVELOPMENT AUTHORITY

GENSITE2.dwg 7-14-00 2:24:46 pm EDT

"RECORD DRAWINGS" G-7 SHEET 7 OF 140 SHEETS

FILE	POCKET	FOLDER	NO.

AHUI STREET (CITY)

KEAULA STREET (CITY)

OHE STREET (CITY)

TRUE NORTH
SCALE: 1" = 40'

DRAINLINE 1

DRAINLINE 2

KAKA'AKO COMMUNITY DEVELOPMENT DISTRICT
IMPROVT. DISTRICT 9
ILALO STREET IMPROVEMENTS

WARD AVENUE EXT. (BY OTHERS)

WARD AVE. EXTENSION

ILALO STREET

ILALO STREET (CITY)

COOKE STREET (CITY)

NEW R/W

CB 17
A=0.08 ac.
Q=0.4 cfs

CB 18
A=0.07 ac.
Q=0.3 cfs

CB 4
A=0.44 ac.
Q=1.9 cfs

A=0.15 ac.
Q=0.7 cfs

CB 2
A=0.59 ac.
Q=2.5 cfs

A=6.6 ac.
Q=28.1 cfs

A=7.5 ac.
Q=31.9 cfs

SPECIAL BOX DMH 3

SPECIAL BOX DMH 2

SPECIAL BOX DMH 1

SPECIAL BOX DMH 4

SPECIAL BOX DMH 5

5'x3' BOX DRAIN

DMH W2

CB 1
A=0.32 ac.
Q=1.4 cfs

CONNECTION
A=7.5 ac.
Q=31.9 cfs

A=5.7 ac.
Q=24.4 cfs

CB 19
A=0.41 ac.
Q=1.8 cfs

STUB FOR FUTURE CONNECTION
A=5.20 ac.
Q=22.1 cfs

A=6.4 ac.
Q=27.4 cfs

A=0.71 ac.
Q=3.0 cfs

CB 3
A=0.27 ac.
Q=1.1 cfs

CB 16
A=0.10 ac.
Q=0.5 cfs

DI 1
A=0.43 ac.
Q=1.9 cfs

CB 25
A=0.11 ac.
Q=0.5 cfs

A=0.62 ac.
Q=2.9 cfs

DI 4
A=0.51 ac.
Q=0.5 cfs

CB 6
A=0.37 ac.
Q=1.6 cfs

A=1.8 ac.
Q=8.2 cfs

DI 5
A=0.55 ac.
Q=0.6 cfs

A=1.1 ac.
Q=3.4 cfs

DMH 1

DMH 2

DMH 3

A=2.4 ac.
Q=6.7 cfs

A=0.33 ac.
Q=2.4 cfs

CB 5
A=0.29 ac.
Q=1.2 cfs

DI 2
A=0.10 ac.
Q=0.5 cfs

DI 6
A=1.1 ac.
Q=1.1 cfs

EXIST. CB
A=0.68 ac.
Q=3.1 cfs

8'x5' BOX DRAIN

DI 7
A=0.40 ac.
Q=1.7 cfs

CB 22
A=0.55 ac.
Q=2.3 cfs

STA. 11+30

MATCH LINE (SEE SHEET C-2)

APPROVED:

M. Tagawa
Chief, Civil Engineering Branch, DPP

7/18/00
DATE:

NOTE:
FOR LEGEND AND ABBREVIATIONS, SEE SHEET C-2.

DRAINAGE PLAN-1
SCALE: 1" = 40'

GRAPHIC SCALES:
1"=40' 40 0 40 80

REVISION	DATE	DESCRIPTION	MADE BY	APPROVED
2	8/24/00	ADDED P24 STUBOUT TO CB#1, CHANGED REVISED DRAIN AREAS.	LSY	GHH DATE
1	4/2/00	REVISED DRAINLINE 2 & KEAULA STREET.	LSY	MT 5/11/00 GHH DATE

R. M. TOWILL CORPORATION
Planning – Engineering – Environmental Services – Photogrammetry – Surveying – Construction Management
808 842 1133 420 Waiakamilo Road Suite 411 Honolulu Hawaii 96817-4941

GREG H. HIYAKUMOTO
LICENSED PROFESSIONAL ENGINEER
No. 6652-C
HAWAII, U.S.A.

THIS WORK WAS PREPARED BY ME OR UNDER MY SUPERVISION.

BY: [signature] 7/14/00
R.M. TOWILL CORPORATION

HAWAII COMMUNITY DEVELOPMENT AUTHORITY
STATE OF HAWAII
HONOLULU, HAWAII

KAKA'AKO COMMUNITY DEVELOPMENT DISTRICT
IMPROVEMENT DISTRICT 9
ILALO STREET IMPROVEMENTS

DRAINAGE PLAN -- 1

ENGINEER: LSY
DRAFTSMAN: HA
CHECKED BY: GHH
DATE: JULY 13, 2000

[signature]
EXECUTIVE DIRECTOR, HAWAII COMMUNITY DEVELOPMENT AUTHORITY

FILE	POCKET	FOLDER	NO.

DRAINAGEPLAN.dwg 7-13-00 4:57:19 pm EST

"RECORD DRAWINGS"

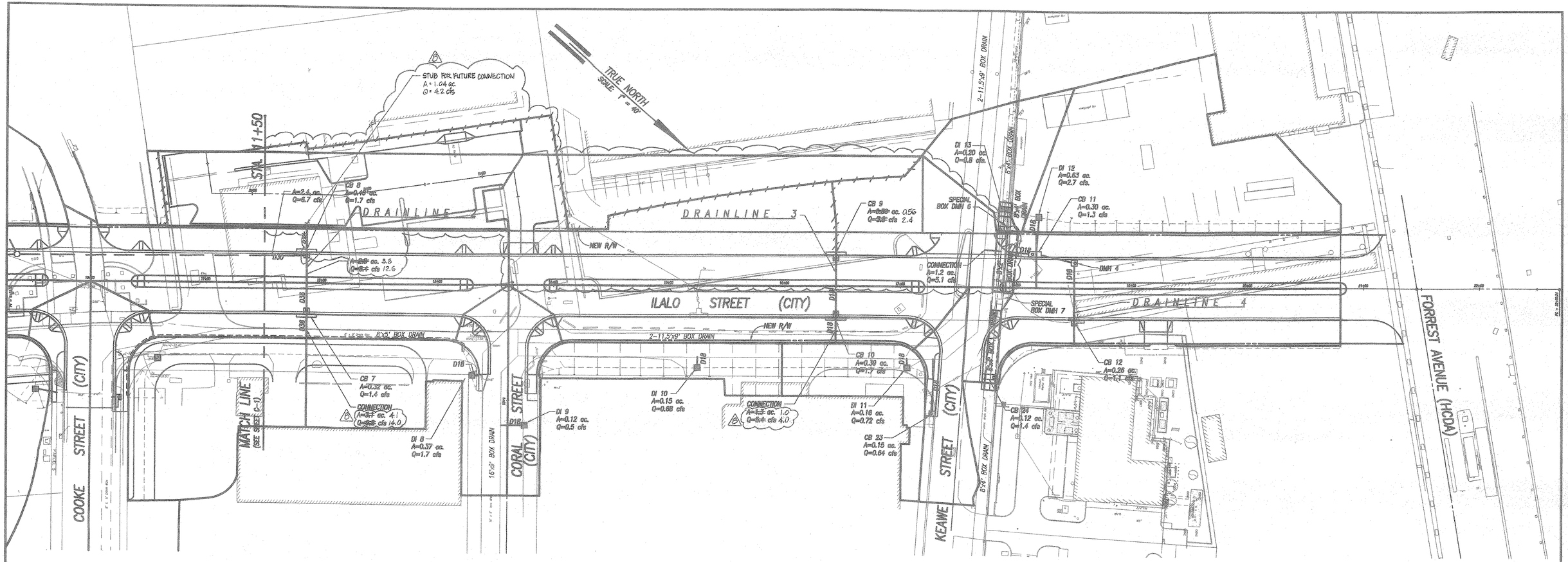

NOTE:
FOR LEGEND AND ABBREVIATIONS, SEE SHEET G-2.

DRAINAGE PLAN-2

SCALE: 1" = 40'

APPROVED: M. [signature] Chief, Civil Engineering Branch, DPP

DATE: 7/18/00

REVISION	DATE	DESCRIPTION	MADE BY	APPROVED
B	8/26/02	ADDED D24 STUBOUT TO CB8 STA. 11+50, REVISED DRAIN AREAS.	LSY	GHH DATE

Planning – Engineering – Environmental Services – Photogrammetry – Surveying – Construction Management
R. M. TOWILL CORPORATION
808 842 1133 420 Waiakamilo Road Suite 411 Honolulu Hawaii 96817-4941

GREG H. HIYAKUMOTO LICENSED PROFESSIONAL ENGINEER No. 5652-C HAWAII, U.S.A.

THIS WORK WAS PREPARED BY ME OR UNDER MY SUPERVISION.

BY: [signature] 7/18/00
R. M. TOWILL CORPORATION

HAWAII COMMUNITY DEVELOPMENT AUTHORITY
STATE OF HAWAII
HONOLULU, HAWAII

KAKA'AKO COMMUNITY DEVELOPMENT DISTRICT
IMPROVEMENT DISTRICT 9
ILALO STREET IMPROVEMENTS

DRAINAGE PLAN – 2

ENGINEER: LSY
DRAFTSMAN: HG
CHECKED BY: GHH
DATE: JULY 13, 2000

EXECUTIVE DIRECTOR, HAWAII COMMUNITY DEVELOPMENT AUTHORITY

GRAPHIC SCALES:
1"=40' 40 0 40 80

DRAINAGEPLAN.dwg 7-13-00 4:57:19 pm EST

FILE	POCKET	FOLDER	NO.

BEST MANAGEMENT PRACTICES
TEMPORARY EROSION CONTROL NOTES

1. FOLLOW SEQUENCE OF OPERATION AS RECOMMENDED ON PAGES 23 AND 24 OF THE "RULES RELATING TO SOIL EROSION STANDARDS AND GUIDELINES", DEPARTMENT OF PLANNING AND PERMITTING, CITY AND COUNTY OF HONOLULU.
2. THE CONTRACTOR SHALL MINIMIZE THE AMOUNT OF LAND TO BE EXPOSED AT ANY ONE TIME.
3. GRASSING (COMMON BERMUDA GRASS OR STAR GRASS CUTTINGS AT THE RATE OF 50 BUSHELS PER ACRE OR AN AVERAGE OF 2 SPRIGS PER SQUARE FOOT) OF ALL EXPOSED OR GRADED AREAS SHALL BE DONE IMMEDIATELY AFTER FINAL GRADES ARE ESTABLISHED.
4. GRADED AREAS THAT ARE NOT AT FINAL GRADE AND ARE EXPECTED TO BE EXPOSED FOR MORE THAN 14 DAYS, SHALL BE MULCHED (AT THE RATE OF 45 CUBIC FEET PER 1,000 SQUARE FEET) IN ORDER TO PREVENT EROSION AND SILT RUNOFF.
5. THE CONTRACTOR SHALL PROVIDE A STABILIZED CONSTRUCTION ENTRANCE CONSISTING OF 8" THICK #2 CRUSHED ROCK FOR INGRESS AND EGRESS.
6. SILT FENCING MAY BE USED AT SELECTED LOCATIONS, AS DESIGNATED BY THE OFFICER-IN-CHARGE.
7. INLET PROTECTION DEVICES SHALL BE INSTALLED AT ALL DRAIN INLETS AND CATCH BASINS.
8. THE ABOVE PROCEDURE FOR EROSION AND SEDIMENT CONTROL MAY BE REVISED BY THE CONTRACTOR TO CONFORM TO HIS GRADING OPERATION PROCEDURE. HOWEVER, ANY REVISIONS TO THE ABOVE SHALL BE SUBMITTED TO THE DEPARTMENT OF PLANNING AND PERMITTING'S CHIEF ENGINEER FOR APPROVAL, BY THE CONTRACTOR.

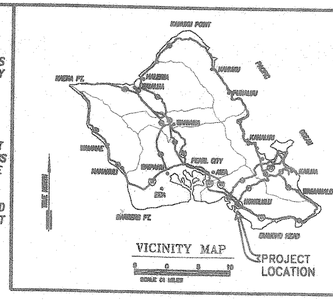

CONSTRUCTION SCHEDULE:

AREA	START OF CONSTRUCTION	START OF GRASSING	FULLY PROTECTED
6.348 ACRES	June 1, 2000	September 1, 2000	May 31, 2003

EARTHWORK SUMMARY
FOR PERMIT PURPOSES ONLY

AREA TO BE GRADED= 7.73 Ac.
EXCAVATION= 13,700 Cu. Yd.
EMBANKMENT= 1,550 Cu. Yd.



LOCATION MAP
NOT TO SCALE

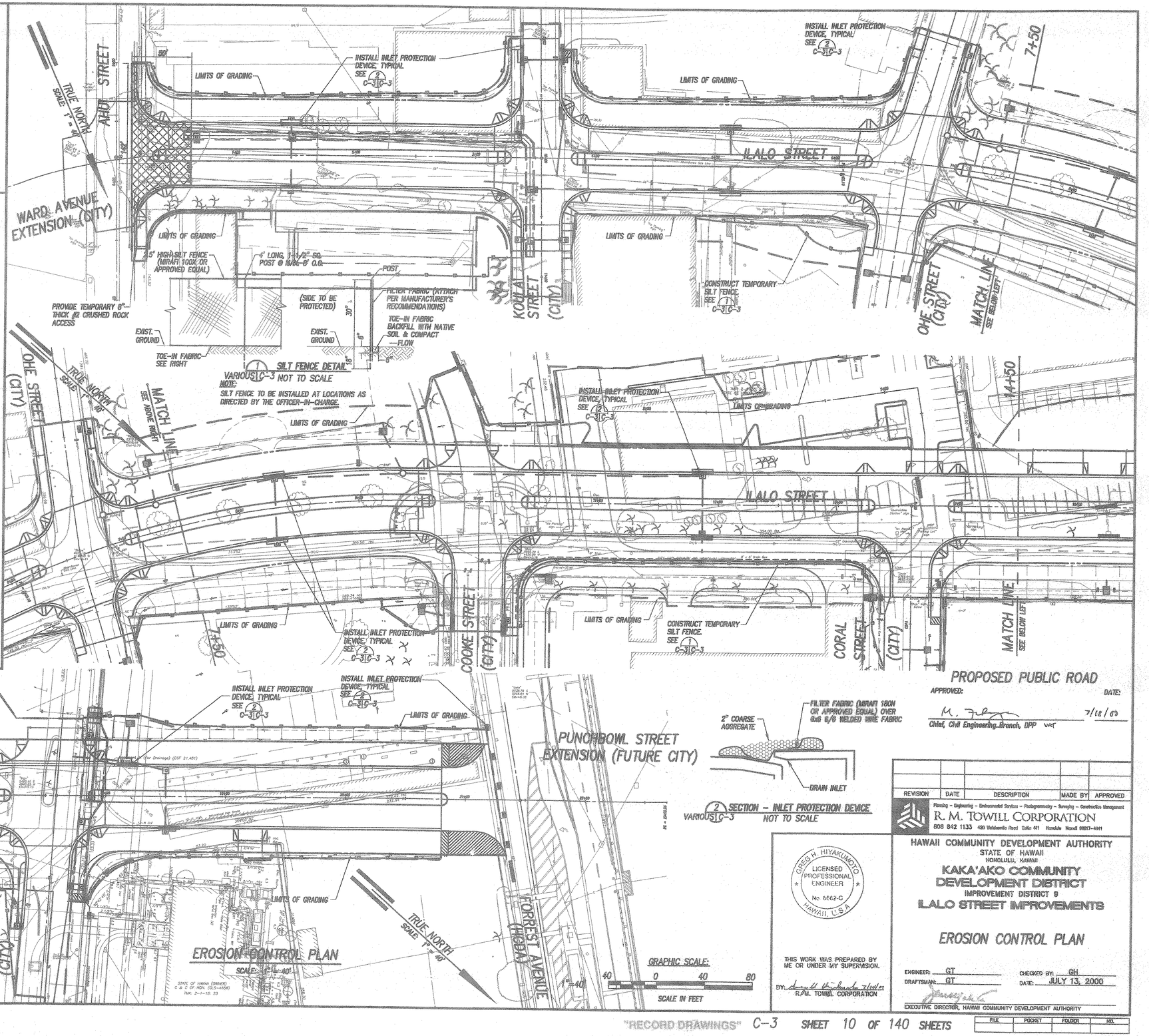

REVISION	DATE	DESCRIPTION	MADE BY	APPROVED

Planning - Engineering - Environmental Services - Photogrammetry - Surveying - Construction Management
R. M. TOWILL CORPORATION
808 842 1133 420 Waiakamilo Road Suite 411 Honolulu Hawaii 96817-4941

GREG H. HIYAKUMOTO
LICENSED PROFESSIONAL ENGINEER
No. 6662-C
HAWAII, U.S.A.

THIS WORK WAS PREPARED BY ME OR UNDER MY SUPERVISION.
BY: R.M. TOWILL CORPORATION

HAWAII COMMUNITY DEVELOPMENT AUTHORITY
STATE OF HAWAII
HONOLULU, HAWAII
KAKA'AKO COMMUNITY DEVELOPMENT DISTRICT
IMPROVEMENT DISTRICT 9
ILALO STREET IMPROVEMENTS

EROSION CONTROL PLAN

ENGINEER: GT
DRAFTSMAN: GT
CHECKED BY: GH
DATE: JULY 13, 2000

EXECUTIVE DIRECTOR, HAWAII COMMUNITY DEVELOPMENT AUTHORITY

FILE	POCKET	FOLDER	NO.

"RECORD DRAWINGS" C-3 SHEET 10 OF 140 SHEETS

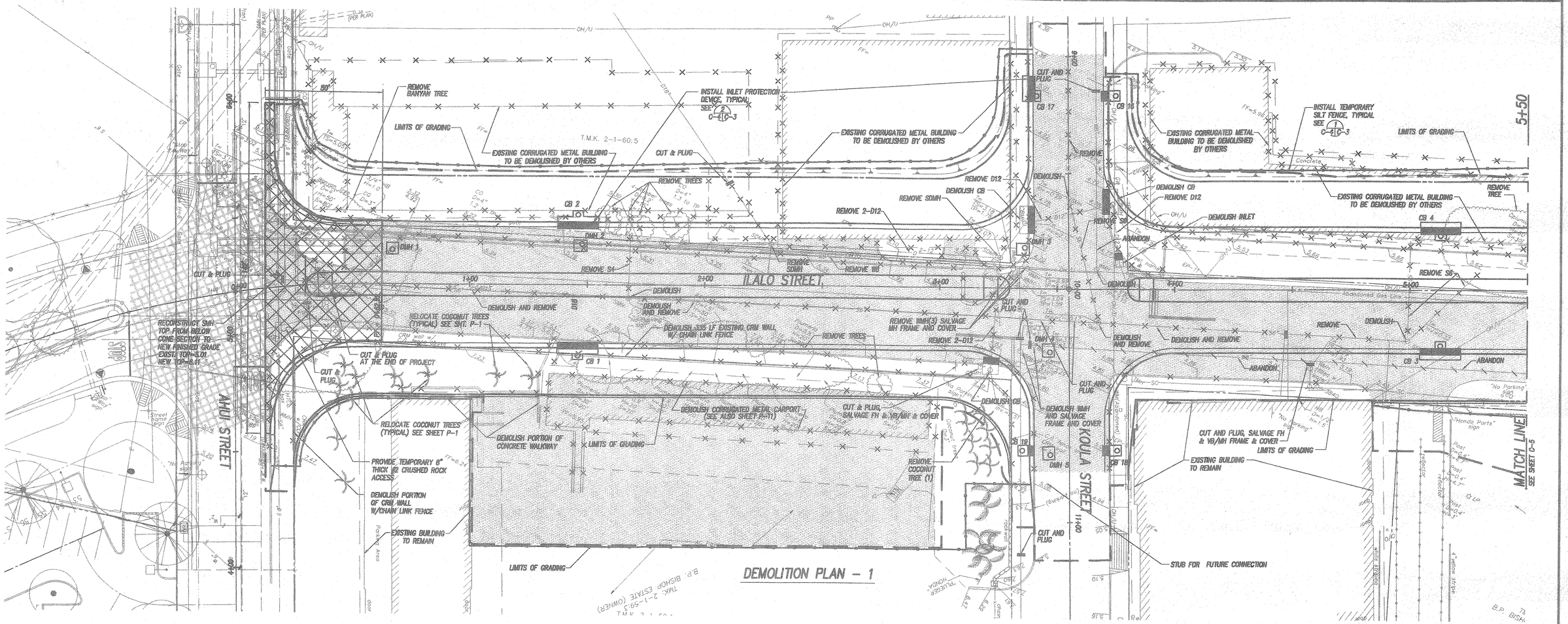

DEMOLITION PLAN – 1

TYPICAL DEMOLITION NOTES:

1. FOR REMOVAL AND/OR RELOCATION OF EXISTING SIGNS AND STRIPING, SEE SIGNING AND STRIPING PLANS SHEETS C-23 AND C-24.
2. CONTRACTOR SHALL MAINTAIN AND PROTECT ALL EXISTING UTILITY FACILITIES PRESENTLY SERVING THE EXISTING BUILDINGS BEING OCCUPIED UNLESS INDICATED OTHERWISE BY THE CONSTRUCTION MANAGER.
3. FOR REMOVAL OF ELECTRICAL UTILITIES, SEE ELECTRICAL DRAWINGS.
4. CONTRACTOR SHALL ADJUST ALL EXISTING MANHOLE FRAME COVERS, VALVE BOX FRAME COVERS, STREET MONUMENT FRAME & COVER AND OTHER APPURTENANCES TO REMAIN TO BE FLUSH WITH NEW FINISHED PAVED SURFACES AND REGRADED AREAS. SEE SHEETS C-26 AND C-32.
5. ALL EXISTING SEWER, WATER, AND DRAINAGE FACILITIES WITHIN THIS PROJECT LIMITS TO REMAIN INTACT, UNLESS NOTED OTHERWISE ON THESE PLANS OR BY THE CONSTRUCTION MANAGER.
6. IN REMOVAL OF EXISTING A.C. PAVEMENT AND/OR CONC. SLAB, CONTRACTOR SHALL REMOVE EXISTING A.C. PAVEMENT INCLUDING BASE COURSE AND SUBBASE (AS REQUIRED) AND BACKFILL AND COMPACT PER SPECIFICATION.
7. ALL WORK AND COST INCURRED IN ABANDONING THE DESIGNATED EXISTING WATER LINES SHALL BE INCLUDED WITH THE NEW WATER LINE CONSTRUCTION.
8. ALL EXISTING ROCK WALLS INDICATED TO BE DEMOLISHED SHALL BE REMOVED. THE HEIGHTS AND LENGTHS INDICATED ARE APPROXIMATE ONLY. HEIGHTS SHOWN DO NOT INCLUDE PORTIONS BELOW GRADE.
9. SEE EROSION CONTROL PLAN (SHT. C-3) FOR SILT FENCES, CONSTRUCTION ACCESS, AND BEST MANAGEMENT PRACTICES PLAN TO BE IN PLACE BEFORE ANY PHASE OF CONSTRUCTION ACTIVITY.
10. FOR ABBREVIATIONS AND ADDITIONAL LEGEND, SEE SHEET G-2.
11. RELOCATED TREES TO BE REPLANTED WITHIN THE PROJECT AREA SHALL BE STORED AND MAINTAINED BY THE CONTRACTOR IN THE ADJACENT KAKAAKO GATEWAY PARK. STORAGE SITE TO BE WITHIN 1000 FT.–EXACT LOCATION TO BE DETERMINED BY THE CONSTRUCTION MANAGER. CONTRACTOR TO RESTORE AREAS TO EXISTING CONDITIONS AFTER RELOCATING TREES. CONTRACTOR TO MAINTAIN THE TREES THROUGH THE 90–DAY MAINTENANCE PERIOD AND GUARANTEE THE LIVES OF THOSE RELOCATED TREES FOR 6 MONTHS.

BEST MANAGEMENT PRACTICES TEMPORARY EROSION CONTROL NOTES

1. FOLLOW SEQUENCE OF OPERATION AS RECOMMENDED ON PAGES 23 AND 24 OF THE "RULES RELATING TO SOIL EROSION STANDARDS AND GUIDELINES", DEPARTMENT OF PLANNING AND PERMITTING, CITY AND COUNTY OF HONOLULU.
2. THE CONTRACTOR SHALL MINIMIZE THE AMOUNT OF LAND TO BE EXPOSED AT ANY ONE TIME.
3. GRASSING (COMMON BERMUDA GRASS OR STAR GRASS CUTTINGS AT THE RATE OF 50 BUSHELS PER ACRE OR AN AVERAGE OF 2 SPRIGS PER SQUARE FOOT) OF ALL EXPOSED OR GRADED AREAS SHALL BE DONE IMMEDIATELY AFTER FINAL GRADES ARE ESTABLISHED.
4. GRADED AREAS THAT ARE NOT AT FINAL GRADE AND ARE EXPECTED TO BE EXPOSED FOR MORE THAN 14 DAYS, SHALL BE MULCHED (AT THE RATE OF 45 CUBIC FEET PER 1,000 SQUARE FEET) IN ORDER TO PREVENT EROSION AND SILT RUNOFF.
5. THE CONTRACTOR SHALL PROVIDE A STABILIZED CONSTRUCTION ENTRANCE CONSISTING OF 8" THICK #2 CRUSHED ROCK FOR INGRESS AND EGRESS.
6. SILT FENCING MAY BE USED AT SELECTED LOCATIONS, AS DESIGNATED BY THE OFFICER–IN–CHARGE.
7. INLET PROTECTION DEVICES SHALL BE INSTALLED AT ALL DRAIN INLETS AND CATCH BASINS.
8. THE ABOVE PROCEDURE FOR EROSION AND SEDIMENT CONTROL MAY BE REVISED BY THE CONTRACTOR TO CONFORM TO HIS GRADING OPERATION PROCEDURE. HOWEVER, ANY REVISIONS TO THE ABOVE SHALL BE SUBMITTED TO THE DEPARTMENT OF PLANNING AND PERMITTING'S CHIEF ENGINEER FOR APPROVAL, BY THE CONTRACTOR.

LEGEND:

- EXISTING A.C. PAVEMENT TO BE DEMOLISHED & REMOVED (BID ADDITIVE ALTERNATE #1)
- EXISTING A.C. PAVEMENT, CONC. SLAB OR CONC. STEPS TO BE DEMOLISH & REMOVED
- EXISTING ITEM OR STRUCTURE TO BE DEMOLISH AND REMOVED
- CUT & PLUG EXISTING LINE
- EXIST. UTILITY LINE TO BE ABANDONED IN PLACE
- LIMITS OF GRADING
- INLET PROTECTION DEVICE, SEE DETAIL ON SHEET C-3
- SILT FENCE, SEE DETAIL ON SHEET C-3
- GRAVEL ACCESS

SEE TEMPORARY EROSION CONTROL NOTES THIS SHEET.

PROPOSED PUBLIC ROAD

APPROVED: DATE:

Chief, Civil Engineering Branch, DPP — 7/18/00

Chief, Wastewater Branch, DPP — 7/25/00

for Chief, Planning & Engineering, BWS — 7-14-00

GRAPHIC SCALE: 1"=20' — 20 0 20 40 — SCALE IN FEET

REVISION	DATE	DESCRIPTION	MADE BY	APPROVED

Planning – Engineering – Environmental Services – Photogrammetry – Surveying – Construction Management
R. M. TOWILL CORPORATION
808 842 1133 420 Waiakamilo Road Suite 411 Honolulu Hawaii 96817–4941

GREG H. HIYAKUMOTO LICENSED PROFESSIONAL ENGINEER No. 6662-C HAWAII, U.S.A.

THIS WORK WAS PREPARED BY ME OR UNDER MY SUPERVISION.

BY: R. M. TOWILL CORPORATION

HAWAII COMMUNITY DEVELOPMENT AUTHORITY
STATE OF HAWAII
HONOLULU, HAWAII

KAKA'AKO COMMUNITY DEVELOPMENT DISTRICT
IMPROVEMENT DISTRICT 9
ILALO STREET IMPROVEMENTS

DEMOLITION PLAN–1

ENGINEER: LSY — CHECKED BY: GH
DRAFTSMAN: NPC — DATE: JULY 13, 2000

EXECUTIVE DIRECTOR, HAWAII COMMUNITY DEVELOPMENT AUTHORITY

FILE	POCKET	FOLDER	NO.

"RECORD DRAWINGS" C-4 SHEET 11 OF 140 SHEETS

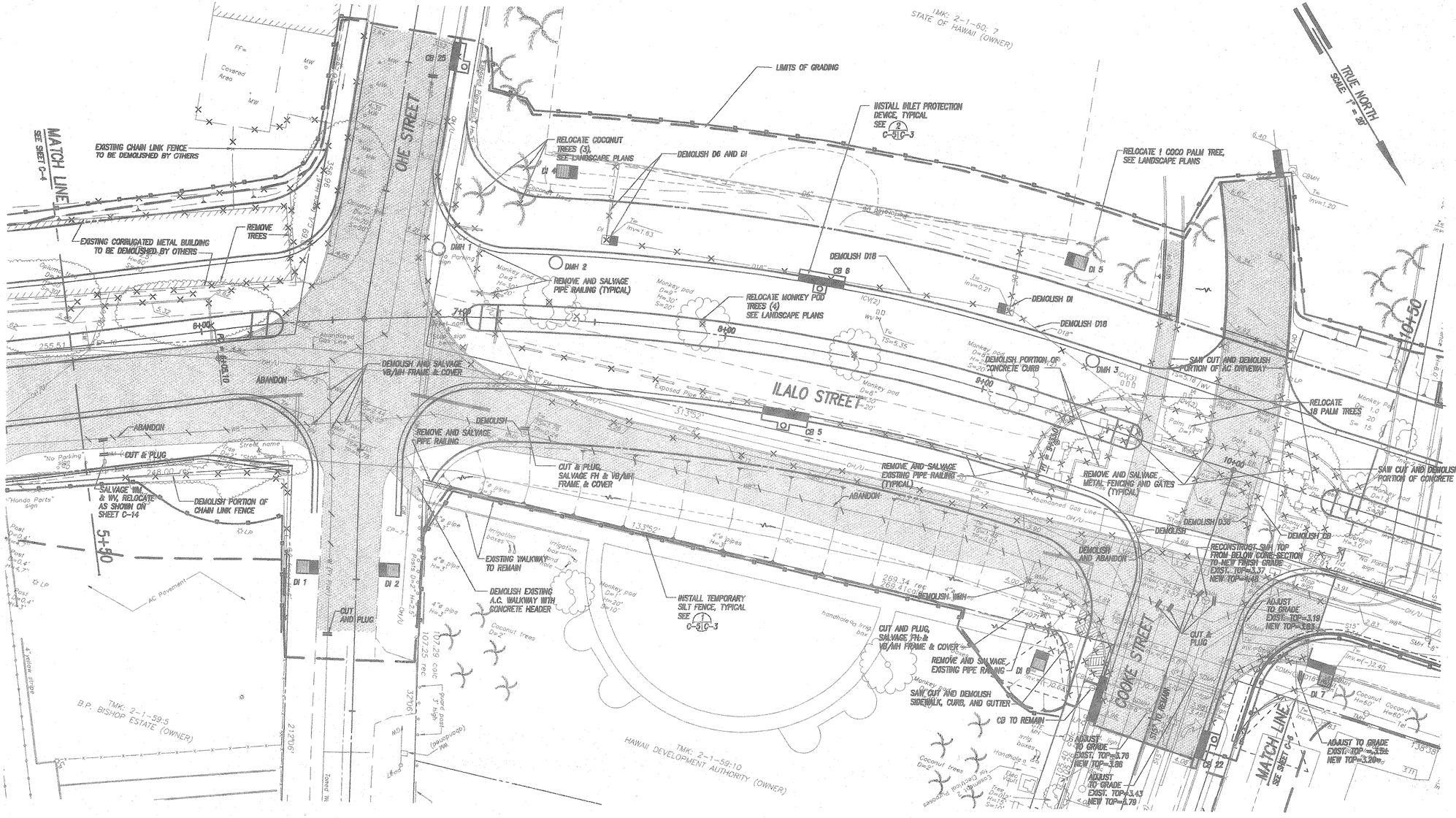

DEMOLITION PLAN -- 2

SCALE: 1" = 20'

LEGEND:

- LIMITS OF GRADING
- INLET PROTECTION DEVICE, SEE DETAIL THIS SHEET
- SILT FENCE
- GRAVEL ACCESS

SEE TEMPORARY EROSION CONTROL NOTES THIS SHEET.

NOTE

1. FOR DEMOLITION NOTES, BEST MANAGEMENT PRACTICE TEMPORARY EROSION CONTROL NOTES SEE SHEET C-4.

GRAPHIC SCALE:

1"=20'

20 0 20 40

SCALE IN FEET

PROPOSED PUBLIC ROAD

APPROVED: DATE:

Chief, Civil Engineering Branch, DPP — 7/18/00

Chief, Wastewater Branch, DPP — 7/25/00

for Chief, Planning & Engineering, BWS — 7-14-00

REVISION	DATE	DESCRIPTION	MADE BY	APPROVED

Planning – Engineering – Environmental Services – Photogrammetry – Surveying – Construction Management

R. M. TOWILL CORPORATION

808 842 1133 420 Waiakamilo Road Suite 411 Honolulu Hawaii 96817-4941

GREG H. HIYAKUMOTO LICENSED PROFESSIONAL ENGINEER No. 6662-C HAWAII, U.S.A.

THIS WORK WAS PREPARED BY ME OR UNDER MY SUPERVISION.

BY: R.M. TOWILL CORPORATION

HAWAII COMMUNITY DEVELOPMENT AUTHORITY
STATE OF HAWAII
HONOLULU, HAWAII

KAKA'AKO COMMUNITY DEVELOPMENT DISTRICT
IMPROVEMENT DISTRICT 9
ILALO STREET IMPROVEMENTS

DEMOLITION PLAN--2

ENGINEER: LSY CHECKED BY: GH

DRAFTSMAN: NPC DATE: JULY 13, 2000

EXECUTIVE DIRECTOR, HAWAII COMMUNITY DEVELOPMENT AUTHORITY

"RECORD DRAWINGS" C-5 SHEET 12 OF 140 SHEETS

FILE	POCKET	FOLDER	NO.

QUARANTINE DEMONSTRATION IRRADIATOR SITE
2.079 ACRES
(DEPT.OF AGRICULTURE)
EXEC. ORD. 2501

TMK: 2-1-60: 9
STATE OF HAWAII (OWNER)

TRUE NORTH
SCALE: 1" = 20'

MATCH LINE
SEE SHEET C-5

MATCH LINE
SEE SHEET C-7

ILALO STREET

CORAL STREET

PROPOSED PUBLIC ROAD

LIMITS OF GRADING

SAW CUT AND DEMOLISH PORTION OF CONCRETE CURB

SAW CUT AND DEMOLISH PORTION OF CRATE DRAIN

SAW CUT AND DEMOLISH PORTION OF DRIVEWAY AND CONCRETE WALL

DEMOLISH CONCRETE WALKWAYS AND RAMPS (TYPICAL)

DEMOLISH CONCRETE CURB (TYPICAL)

SAW CUT AND DEMOLISH CONCRETE CURB

CUT & PLUG AT SDMH

INSTALL INLET PROTECTION DEVICE - TYPICAL SEE C-8 C-3

REMOVE TREE

RELOCATE COCONUT TREES (TYPICAL) SEE SHT. P-6

TREE TO REMAIN

DEMOLISH EXISTING CONCRETE BUILDING

DEMOLISH PORTION OF CHAIN LINK FENCE

DEMOLISH CB

DEMOLISH CURB & GUTTER

CB 6

CB 7

CB 9

CB 10

RELOCATE TREES

CUT AND PLUG

DEMOLISH CONCRETE WALKWAY

REMOVE AND SALVAGE SIGNS

RELOCATE TREES, SEE LANDSCAPE PLANS

DEMOLISH PORTION OF CHAIN LINK FENCE

DEMOLISH CB

SALVAGE & RELOCATE WM, RPBP & APPURTENANCES, SEE SHEET C-16

RELOCATE TREE SEE LANDSCAPE PLANS

RELOCATE COCONUT TREES (TYPICAL) SEE SHEET P-6

ADJUST TO GRADE: EXIST. TOP=3.99 NEW TOP=4.32

REMOVE AND SALVAGE SIGNS

RELOCATE TREE

DEMOLISH & ABANDON

DEMOLISH CB

DEMOLISH

ADJUST TO GRADE EXIST. TOP=3.25 NEW TOP=3.50

EXISTING 9' X 5' DRAIN BOX - (Keeps to "Gula" Street)

EXISTING DBL 11.5 X 9 BOX DRAIN TO REMAIN

DEMOLISH AND SALVAGE WMH/WV FRAME & COVER

CUT & PLUG

CUT AND PLUG

CUT & PLUG

DEMOLISH CONCRETE CURB

DEMOLISH WMH AND SALVAGE FRAME & COVER

CUT & PLUG, SALVAGE FH & VB/MH FRAME & COVER

ABANDON WB

DEMOLISH DI

ADJUST TMH COVER (SEE ELECTRICAL DWGS.)

DI 8 TO REMAIN

LIMITS OF GRADING

LIMITS OF GRADING

INSTALL TEMPORARY SILT FENCE, TYPICAL SEE C-8 C-3

DEMOLISH DRAIN INLET

CUT AND PLUG, SALVAGE FH & VB/MH FRAME & COVER

LIMITS OF GRADING

DEMOLISH EXISTING CORRUGATED METAL CARPORT

SALVAGE FH & VB/MH FRAME & COVER

DEMOLITION PLAN – 3

SCALE: 1" = 20'

LEGEND:

- LIMITS OF GRADING
- INLET PROTECTION DEVICE, SEE DETAIL THIS SHEET
- SILT FENCE
- GRAVEL ACCESS

SEE TEMPORARY EROSION CONTROL NOTES THIS SHEET.

NOTE:

1. FOR DEMOLITION NOTES AND BEST MANAGEMENT PRACTICE TEMPORARY EROSION CONTROL NOTES SEE SHEET C-4.

APPROVED: DATE:

M. [illegible] 7/18/00
Chief, Civil Engineering Branch, DPP

Deemin M. Nishimura 7/25/00
Chief, Wastewater Branch, DPP

Catherine R. Drungca 7-14-00
for Chief, Planning & Engineering, BWS

GRAPHIC SCALE:
1"=20' 20 0 20 40
SCALE IN FEET

REVISION	DATE	DESCRIPTION	MADE BY	APPROVED

Planning – Engineering – Environmental Services – Photogrammetry – Surveying – Construction Management
R. M. TOWILL CORPORATION
808 842 1133 420 Waiakamilo Road Suite 411 Honolulu Hawaii 96817-4941

GREG H. HIYAKUMOTO
LICENSED PROFESSIONAL ENGINEER
No. 6662-C
HAWAII, U.S.A.

THIS WORK WAS PREPARED BY ME OR UNDER MY SUPERVISION.
BY: [signature] 7/14/00
R. M. TOWILL CORPORATION

HAWAII COMMUNITY DEVELOPMENT AUTHORITY
STATE OF HAWAII
HONOLULU, HAWAII
KAKA'AKO COMMUNITY DEVELOPMENT DISTRICT
IMPROVEMENT DISTRICT 9
ILALO STREET IMPROVEMENTS

DEMOLITION PLAN-3

ENGINEER: LSY CHECKED BY: GH
DRAFTSMAN: NPC DATE: JULY 13, 2000

EXECUTIVE DIRECTOR, HAWAII COMMUNITY DEVELOPMENT AUTHORITY

FILE	POCKET	FOLDER	NO.

"RECORD DRAWINGS" C-6 SHEET 13 OF 140 SHEETS

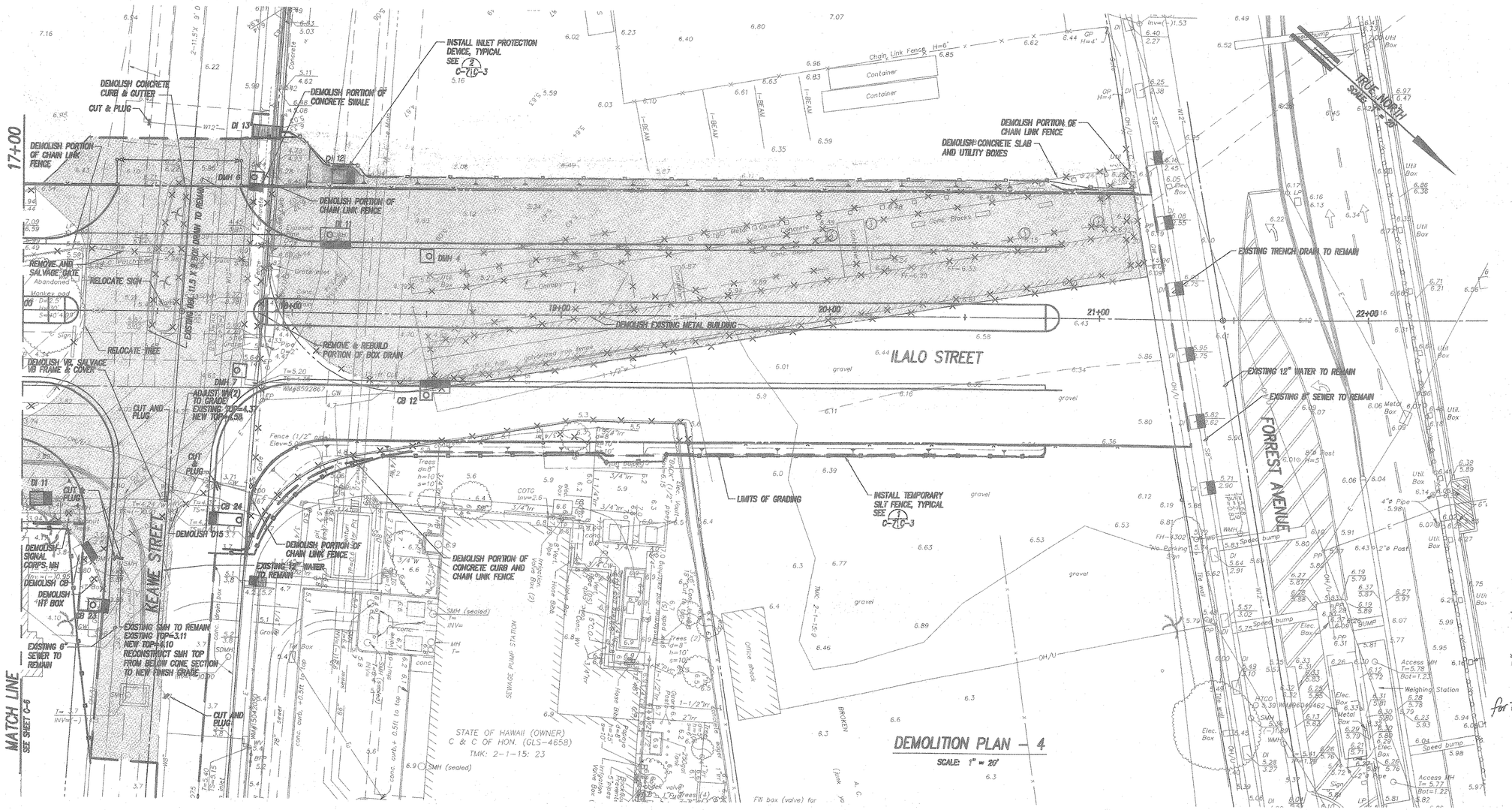

DEMOLITION PLAN – 4

SCALE: 1" = 20'

PROPOSED PUBLIC ROAD

LEGEND:

- LIMITS OF GRADING
- INLET PROTECTION DEVICE, SEE DETAIL THIS SHEET
- SILT FENCE
- GRAVEL ACCESS

SEE TEMPORARY EROSION CONTROL NOTES THIS SHEET.

NOTE:

1. FOR DEMOLITION NOTES AND BEST MANAGEMENT PRACTICE TEMPORARY EROSION CONTROL NOTES SEE SHEET C-4.

GRAPHIC SCALE:

1"=20' — 20 0 20 40 — SCALE IN FEET

APPROVED: DATE:

M. [signature] 7/18/00
Chief, Civil Engineering Branch, DPP

[signature] 7/25/00
Chief, Wastewater Branch, DPP

Catherine R. Bumgo 7-14-00
for Chief, Planning & Engineering, BWS

REVISION	DATE	DESCRIPTION	MADE BY	APPROVED

Planning – Engineering – Environmental Services – Photogrammetry – Surveying – Construction Management
R. M. TOWILL CORPORATION
808 842 1133 420 Waiakamilo Road Suite 411 Honolulu Hawaii 96817-4941

GREG H. HIYAKUMOTO LICENSED PROFESSIONAL ENGINEER No. 6662-C HAWAII, U.S.A.

THIS WORK WAS PREPARED BY ME OR UNDER MY SUPERVISION.

BY: [signature] 7/18/00
R.M. TOWILL CORPORATION

HAWAII COMMUNITY DEVELOPMENT AUTHORITY
STATE OF HAWAII
HONOLULU, HAWAII

KAKA'AKO COMMUNITY DEVELOPMENT DISTRICT
IMPROVEMENT DISTRICT 9
ILALO STREET IMPROVEMENTS

DEMOLITION PLAN-4

ENGINEER: LSY CHECKED BY: GH
DRAFTSMAN: NPC DATE: JULY 13, 2000

[signature]
EXECUTIVE DIRECTOR, HAWAII COMMUNITY DEVELOPMENT AUTHORITY

"RECORD DRAWINGS" C-7 SHEET 14 OF 140 SHEETS

FILE	POCKET	FOLDER	NO.

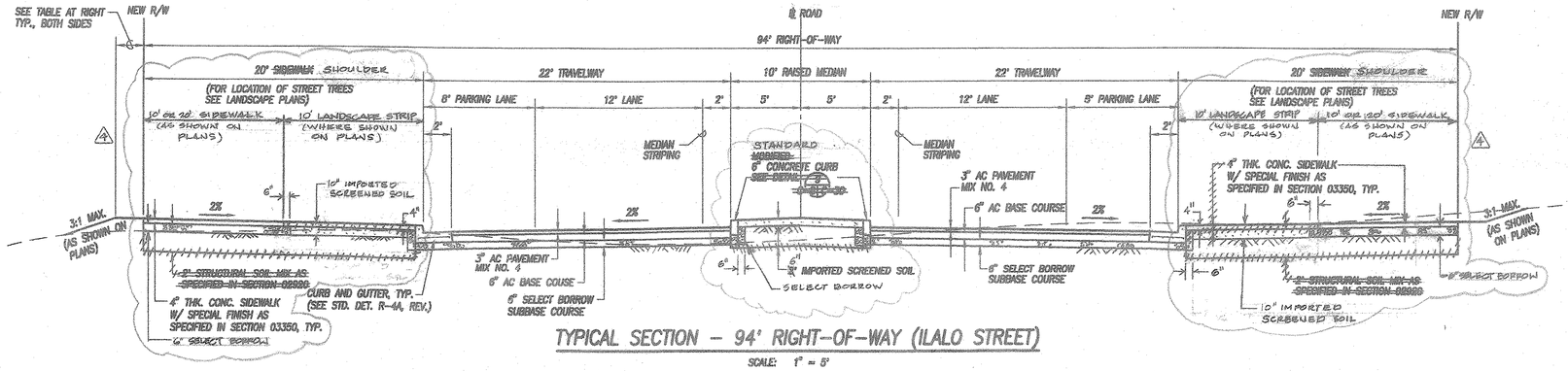

TYPICAL SECTION – 94' RIGHT-OF-WAY (ILALO STREET)

SCALE: 1" = 5'

NOTE:

UPON COMPLETION OF ALL WIDENING AND UTILITY IMPROVEMENTS, THE FINAL LAYER OF ASPHALT CONCRETE SHALL BE SPREAD AS SPECIFIED IN SECTION 02510 – ASPHALT CONCRETE PAVING AND SURFACING, OF THE SPECIFICATIONS, ALONG THE ENTIRE LENGTH OF THE PROJECT BEGINNING AT THE ILALO STREET/AHUI STREET/WARD AVENUE INTERSECTION. PERMANENT PAVEMENT MARKERS, STRIPING AND MARKINGS SHALL BE INSTALLED AS SPECIFIED IN SECTION 02990, PAVEMENT MARKERS, STRIPING AND MARKINGS, OF THE SPECIFICATIONS.

TABLE FOR HORIZONTAL DISTANCES FROM PROPERTY LINE TO TOP OF FILL OR BOTTOM OF CUT SLOPE	
HEIGHT OF CUT OR FILL	DISTANCE (FEET)
0 TO 4 FEET	2
4.1 TO 8 FEET	4
8.1 TO 15 FEET	6
GREATER THAN 15 FEET	8

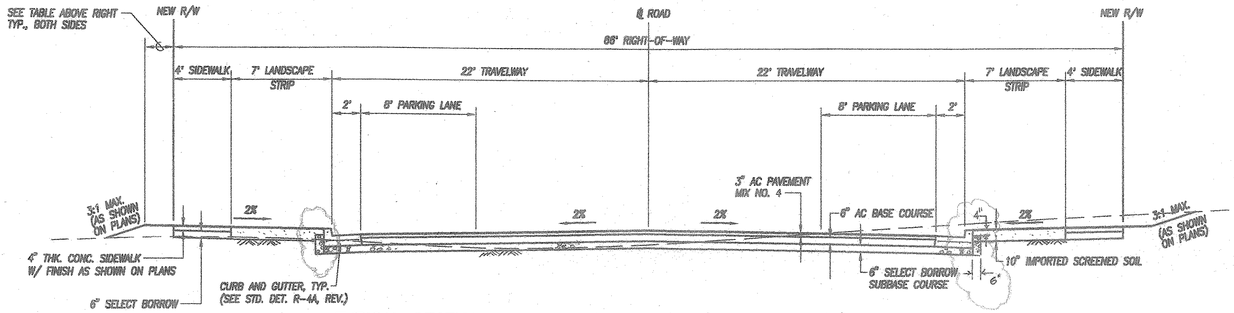

TYPICAL SECTION – 66' RIGHT-OF-WAY (COOKE STREET)

SCALE: 1" = 5'

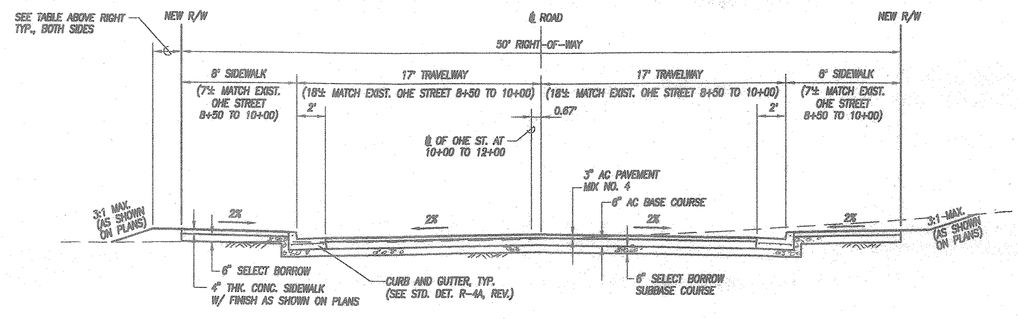

TYPICAL SECTION – 50' RIGHT-OF-WAY (KOULA, OHE, & CORAL STREETS)

SCALE: 1" = 5'

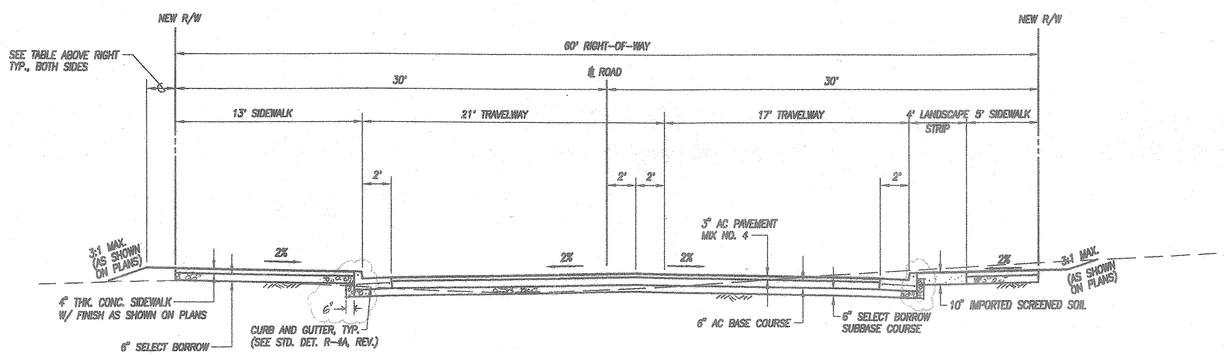

TYPICAL SECTION – 60' RIGHT-OF-WAY (KEAWE STREET)

SCALE: 1" = 5'

GRAPHIC SCALES:

1"=5' 5 0 5 10

1"=10' 10 5 0 10 20

SCALE IN FEET

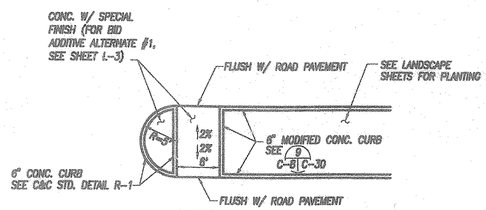

PLAN

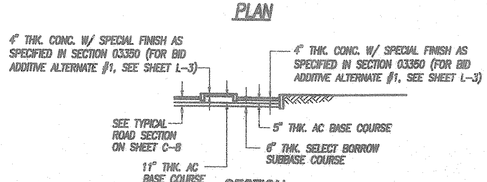

SECTION

TYPICAL MEDIAN LAYOUT

SCALE: 1" = 10'

PROPOSED PUBLIC ROAD

APPROVED: DATE: 7/18/00

Chief, Civil Engineering Branch, DPP

Chief, Traffic Review Branch, DPP 8/16/00

REVISION	DATE	DESCRIPTION	MADE BY	APPROVED
4	7/9/01	ADDED 10' WIDE LANDSCAPE STRIP ALONG ILALO STREET	LSY	LSY 7/9/01 TRS 7/9/01

R. M. TOWILL CORPORATION

808 842 1133 420 Waiakamilo Road Suite 411 Honolulu Hawaii 96817-4941

Planning – Engineering – Environmental Services – Photogrammetry – Surveying – Construction Management

GREG H. HIYAKUMOTO LICENSED PROFESSIONAL ENGINEER No. 6662-C HAWAII, U.S.A.

THIS WORK WAS PREPARED BY ME OR UNDER MY SUPERVISION.

BY: 7/18/00 R.M. TOWILL CORPORATION

HAWAII COMMUNITY DEVELOPMENT AUTHORITY
STATE OF HAWAII
HONOLULU, HAWAII

KAKA'AKO COMMUNITY DEVELOPMENT DISTRICT
IMPROVEMENT DISTRICT 9
ILALO STREET IMPROVEMENTS

TYPICAL ROAD SECTIONS

ENGINEER: LSY CHECKED BY: GHH
DRAFTSMAN: HG DATE: JULY 13, 2000

EXECUTIVE DIRECTOR, HAWAII COMMUNITY DEVELOPMENT AUTHORITY

FILE	POCKET	FOLDER	NO.

"RECORD DRAWINGS" C-8 SHEET 15 OF 140 SHEETS

TYPSEC.dwg 7-14-00 1:19:02 pm EST

@ CURVE DATA						
CURVE	Δ	Δ/2	R	T	C	Lc
PCC 0+00 TO PT 0+62.52	08°19'52"	04°09'56"	430.00	31.32	62.47	62.52

CURB RETURN DATA						
CURVE	Δ	Δ/2	R	T	C	Lc
(1)	87°56'49"	43°58'25"	28.00	27.01	38.88	42.98
(2)	91°32'46"	45°46'24"	28.00	28.77	40.13	44.74
(3)	90°34'00"	45°17'00"	28.00	28.28	39.79	44.26
(4)	88°26'00"	44°43'00"	28.00	27.72	39.40	43.71
(5)	88°26'00"	44°43'00"	28.00	27.72	39.40	43.71
(6)	90°34'00"	45°17'00"	28.00	28.28	39.79	44.26

RIGHT-OF-WAY CURVE DATA						
CURVE	Δ	Δ/2	R	T	C	Lc
(A)	89°28'34"	44°43'17"	30.00	29.71	42.22	46.83
(B)	90°20'59"	45°10'30"	30.00	30.18	42.56	47.31
(C)	90°34'00"	45°17'00"	30.00	30.30	42.64	47.42
(D)	89°28'00"	44°43'00"	30.00	29.70	42.22	46.83
(E)	89°28'00"	44°43'00"	30.00	29.70	42.22	46.83

NOTES

1. SEE LANDSCAPING SHEETS FOR THE LOCATION OF PLANTERS WITHIN THE SIDEWALKS, AND FOR THE JOINTING PLAN OF CONCRETE SIDEWALKS.
2. TOPS OF ALL CATCH BASINS WITHIN SIDEWALKS SHALL HAVE SPECIAL CONCRETE FINISH. REFER TO SECTION 03350 IN THE SPECIFICATIONS.
3. FOR CONSTRUCTION NOTES, SEE SHEETS G-3, G-4, AND G-5.
4. ALL NEW DRAIN MANHOLES WITHIN PAVED AREAS SHALL BE CONSTRUCTED WITH GRADE RING RISERS, SEE (4) C-01C-28
5. ALL NEW SEWER MANHOLES WITHIN PAVED AREAS SHALL BE CONSTRUCTED WITH GRADE RING RISERS, SEE (3) C-01C-32 ; AND WITH A STABILIZATION LAYER, SEE (8) C-01C-32
6. FOR LEGEND AND ABBREVIATIONS, SEE SHEET G-2.
7. CURB RETURN GRADES SHOWN DO NOT REFLECT CURB RAMP SLOPES.

REV.	DATE	DESCRIPTION	BY	APPROVED
5	4/2/02	REVISED ROAD PROFILE CLOSED DRIVEWAY INT. 0+855 LT.	LSY	TMS DATE
4	4/2/02	REVISED WATER SYSTEM FROM 10+87.5 TO 9+18 KOULA STREET	LSY	TMS DATE
3	4/2/02	REVISED SEWER SYSTEM FROM 7+61 TO 9+67.5 KOULA STREET	LSY	TMS DATE
2	4/2/02	RELOCATED CB 16 & IT. REVISED TO DI2, CL. IV. REVISED ROAD PROFILE	LSY	CLEB. DATE
1	7/9/01	ADDED 10' LANDSC. STRIP ALONG ILALO STREET	LSY	APPROVED
4	6/14/01	ADDED CONC. SLAB FOR FH	LSY	APPROVED
3	7/9/01	ADDED 10' WIDE LANDSCAPE STRIP ALONG ILALO STREET	LSY	APPROVED
REVISION	DATE	DESCRIPTION	MADE BY	APPROVED

EARTHWORK SUMMARY

FOR PERMIT PURPOSES ONLY.

AREA TO BE GRADED= 7.75 Ac.

EXCAVATION= 13,700 Cu. Yd.

EMBANKMENT= 1,550 Cu. Yd.

PROPOSED PUBLIC ROAD

APPROVED: DATE:

Chief, Civil Engineering Branch, DPP — 7/18/00

Chief, Wastewater Branch, DPP — 7/25/00

Chief, Traffic Review Branch, DPP — 8/3/00

for Chief, Planning & Engineering, BWS — 7-14-00

Planning – Engineering – Environmental Services – Photogrammetry – Surveying – Construction Management

R. M. TOWILL CORPORATION

808 842 1133 420 Waiakamilo Road Suite 411 Honolulu Hawaii 96817-4941

HAWAII COMMUNITY DEVELOPMENT AUTHORITY

STATE OF HAWAII

HONOLULU, HAWAII

KAKA'AKO COMMUNITY DEVELOPMENT DISTRICT

IMPROVEMENT DISTRICT 9

ILALO STREET IMPROVEMENTS

ILALO STREET

PLAN AND PROFILE – 1

0+00 TO 4+50

ENGINEER: LSY — CHECKED BY: GHH

DRAFTSMAN: BEY — DATE: JULY 13, 2000

EXECUTIVE DIRECTOR, HAWAII COMMUNITY DEVELOPMENT AUTHORITY

GREG H. HIYAKUMOTO LICENSED PROFESSIONAL ENGINEER No. 6662-C HAWAII, U.S.A.

THIS WORK WAS PREPARED BY ME OR UNDER MY SUPERVISION.

BY: 7/19/01 R.M. TOWILL CORPORATION

FILE	POCKET	FOLDER	NO.

"RECORD DRAWINGS" C-9

plan1.dwg 7-14-00 7:22:26 am EST

(BID ADDITIVE ALTERNATE #1) CONCRETE PAVEMENT WITH SPECIAL FINISH AS SHOWN ON LANDSCAPE SHEETS ALSO SEE 10 C-10 C-31

TRUE NORTH SCALE 1" = 20'

MATCH LINE SEE SHEET C-9

MATCH LINE SEE SHEET C-11

ILALO STREET (CITY)

OHE STREET (CITY)

4+93, 49' LT. END 6" LATERAL INV.=(-)6.81 SEE 1 C-10 C-32 TYP.

5+88 1-12"x8" TEE 1-CONC. BLK. 1-6" GV, CL. 150 1-TYPE "C" MH 1-RC THRUST BEAM W/ REVERSED BELL PIPE

5+18, 16' RT. 1-12" 1/8 BEND (BV) 1-CONC. BLK.

5+21, 16' RT. 1-12" 1/8 BEND (TV) 1-CONC. BLK.

38 LF 6" VCP @ 1.0%

4+93, 12.5 LT. SMH 3A TOP=5.16 INV.=(-)7.17 (S8) INV.=(-)7.67 (S12)

5+13 CB 4 TYPE F TOP=6.86 INV.=1.23

NEW R/W

6+67.5 1-12"X12" CROSS 1-12" GV, CL. 150 4-TYPE "B" MH

LIMIT OF CONC. PAVEMENT (BID ADDITIVE ALTERNATE #1) SEE 6 C-10 C-31

6+27 CURB RAMP

4+80, 39' LT. END 8" STUB 1-6" CAP W/ 2-1/2" C.O. 1-CONC. BLK. 1-BRASS MARKER, SEE 7 C-10 C-26 TYP. INV.=1.04

@ STA. 4+80 CONTRACTOR TO INSTALL TYPE C LATERAL AND BLIND METER SPLICE LENGTH TO ACCOMMODATE A 1" METER FOR IRRIGATION PURPOSE, TYPE X METER BOX, 1-1/2" BWS APPROVED REDUCED PRESSURE BACKFLOW PREVENTER PRIOR TO ANY TEES OR BRANCHES PER BWS STD. DET. 126, AND ALL APPURTENANCES IN ACCORDANCE WITH BWS STANDARDS. BWS TO REMOVE SPLICE AND INSTALL METER AFTER WATER SERVICE IS APPLIED AND PAID FOR. (SEE LANDSCAPE IRRIGATION PLANS FOR CONT.) INSTALL CONCRETE SLAB, 4" THICK x 6" WIDE AROUND METER BOX

4+80, 16' RT. 1-12"x8" TEE 1-CONC. BLK. 1-6" GV, CL. 150 1-TYPE "C" MH 1-RC THRUST BEAM W/ REVERSED BELL PIPE

63 LF 6" VCP @ 3.0%

RECONNECT TO BUILDING/PLUMBING. CONTRACTOR TO VERIFY LOCATION, SIZE, & INVERT

5+04.51' RT. END 6" LATERAL INV.=(-)6.55

4+93.53' RT. END 6" LATERAL INV.=(-)6.64

TMK: 2-1-59: 4 B. P. BISHOP ESTATE (OWNER)

TMK: 2-1-59: 5 B. P. BISHOP ESTATE (OWNER)

5+08, 15' RT. 1-12" 1/8 BEND (TV) 1-CONC. BLK.

5+05, 15' RT. 1-12" 1/8 BEND (TV) 1-CONC. BLK.

4+50

CB 3 TYPE F TOP=4.86 INV.=0.27

NEW R/W

1-6" SMH W/ END 8" STUB 2-1/2" C.O. 1-CONC. BLK. 1-BRASS MARKER INV.=1.11

EXIST. R/W

5+42, 16' RT. FH CONN. 1-12"x8" TEE 2-CONC. BLK. 1-6" GV, CL. 150 1-TYPE "C" MH 1-FH, (HT=5.0) 13 LF 6" PVC, CL. 150 1-FH MARKER 6"x6' CONC. SLAB

FOR WORK BEYOND ROAD R/W SEE PROPERTY MODIFICATION SHEET P-2

LIMITS OF GRADING

INTERSECTION 6+62.09 ILALO ST. = 10+00 OHE ST. INSTALL ST. MON. ELEV. = 5.52

TMK: 2-1-60: 6 HAWAII COMM. DEV. AUTHORITY (OWNER)

C & C OF HON. (LE)

LIMITS OF GRADING

6+63.9, 12.5 LT. SMH 4 TOP=6.20 INV.= (-)7.99 (S9) INV.= (-)8.22 (S12) INV.= (-)8.47 (S15)

6+34.19 R=30'

6+12.36 R=30'

6+90.7, 26.4' LT. DMH 1 TOP=6.39 INV.=(-)0.67

7+35, O/S 57' LT. DI 4 TOP=6.83 INV.=0.47 (D6) INV.=(-)0.03 (D16)

8+16.6, 10.5 LT. SMH 5 TOP=5.08 INV.= (-)8.22 (S6) INV.= (-)8.97 (S15)

TMK: 2-1-60: 7 HAWAII COMM. DEV. AUTHORITY (OWNER)

8+16.5, 49' LT END 6" LATERAL INV.=(-)7.84

8+32 CB 6 TYPE F TOP= 4.76 INV.=(-)1.40

8+98, 37' LT END 8" STUB 1-6" CAP W/ 2-1/2" C.O. 1-CONC. BLK. 1-BRASS MARKER INV.=1.07

25 LF 6" PVC SUBDRAIN @ 1.0% CONNECT TO EXIST. SUBDRAIN

74 LF GRASSED SWALE @ 0.7%

LIMITS OF GRADING

20:1 TYP.

R=30'

5.70

VARIES

2% 5.30

81 LF SWALE @ 0.7 %

7+14, 22' LT. DMH 2 TOP=5.26 INV.=(-)0.38 (D18) INV.=(-)0.89 (D18)

NEW R/W

38.5 LF 6" VCP @ 1.0%

54 LF 18" RCP CL. III @ 0.4%

8+19.4, 16' RT. 1-12" 1/8 BEND (TV)

7+12.4 CURB RAMP SEE 2 C-10 C-30 TYP.

135 LF 18" RCP CL. III @ 1.0%

S15

7+00

7+01.05

@ ROAD

128°05'05" 269.48' (INTERS. TO PT.)

38 LF RC JACKET

8+24, 16' RT. 1-12" 1/8 BEND (BV)

FUTURE SEWER CORRIDOR

25 LF RC JACKET

8+00

130°25'05" 267.70' (MON. TO MON.)

7+08.7 CURB RAMP

LIMIT OF CONC. PAVEMENT (BID ADDITIVE ALTERNATE #1) SEE 8 C-10 C-31

80 LF 6" VCP @ 1.0%

NEW R/W

8+38.6, 16' RT. 1-12" 1/8 BEND (TV)

8+34, 16' RT. 1-12" 1/8 BEND (BV)

7+40 FH CONN. 1-12"x6" TEE 2-CONC. BLK. 1-6" GV, CL. 150 1-TYPE "C" MH 1-FH, (HT=5.0) 45 LF 6" PVC, CL. 150 1-FH MARKER

8+17.5, 49' RT. END 6" LATERAL INV.=(-)7.62

CUT & PLUG

6.0

123 LF GRASSED SWALE @ 0.7%

7+76.8 CURB RAMP

7+02.6, 16' RT. 1-3/4" ARV (W.P.=77.4 psi) 1-TYPE "C" MH

LIMITS OF GRADING

EXIST. R/W

VARIES 4:1 MAX.

VARIES 5:1 MAX.

100 LF GRASSED SWALE @ 0.85%

6+94.9, 16' RT. 1-12" 1/8 BEND (TV)

6+89.9, 16' RT. 1-12" 1/8 BEND (BV)

6+79.9, 16' RT. 1-12" 1/8 BEND (TV)

6+74.9, 16' RT. 1-12" 1/8 BEND (BV)

EXIST R/W

8+26 CB 5, TYPE E TOP=5.20 INV.=(-)1.18

8+68 1-12"x8" CROSS 1-8" GV, CL. 150 2-TYPE "C" MH 2-RC THRUST BEAM W/ REVERSED BELL PIPE

8+98, 37' RT. END 8" STUB 1-6" CAP W/ 2-1/2" C.O. 1-CONC. BLK. 1-BRASS MARKER INV.=1.07

PLAN

SCALE: 1" = 20'

TMK: 2-1-56: 10 HAWAII COMMUNITY DEVELOPMENT AUTHORITY (OWNER)

@ CURVE DATA						
CURVE	Δ	Δ/2	R	T	C	Lc
PC 6+05.10 TO PT 9+33.01	25°03'00"	12°31'30"	750.00	166.61	325.30	327.90

CURB RETURN DATA						
CURVE	Δ	Δ/2	R	T	C	Lc
(7)	75°08'44"	37°34'22"	28.00	21.54	34.15	36.72
(8)	86°42'00"	49°21'00"	28.00	32.61	42.49	46.23
(9)	86°10'05"	49°05'02.5"	28.00	32.31	42.32	47.97
(10)	86°58'05"	44°29'02"	28.00	27.50	39.24	43.48

RIGHT-OF-WAY CURVE DATA						
CURVE	Δ	Δ/2	R	T	C	Lc
(F)	74°54'16"	37°27'08"	30.00	22.98	36.49	39.22
(G)	97°19'13"	48°39'36.5"	30.00	34.10	45.05	50.96
(H)	26°02'19"	13°01'09"	30.00	6.94	13.52	13.63
(J)	62°56'16"	31°28'08"	30.00	16.36	31.32	32.95

NOTE

1. SEE NOTES ON SHEET C-9.

FLOW REQUIREMENTS

FLOW REQUIREMENTS FOR NEW WATER METER INSTALLATION @ @ STA. 4+80

	FIXTURE UNITS	GPM	GPD
DOMESTIC	0	0	0
IRRIGATION	85	39	4,700
TOTAL	85	39	4,700

FOR ESTIMATING PURPOSES ONLY

DESCRIPTION OF WORK		ESTIMATE
1 1/2" DOMESTIC SERVICE 1" METER INSTALLATION CHARGE	$ 109+$180	$ 289.00
WATER SYSTEM FACILITIES CHARGES (WSFC)		
50 FU x $620.85 =	$ 31,042.50	
35 FU x $220.29 =	$ 7,710.15	$ 38,752.65
◇ CREDIT S/N _____ S/N _____		
N/A FIRE SERVICE METER		N/A
INSTALLATION CHARGE	$	$ 0
ONE-TIME CHARGE	$	$
TOTAL		$ 39,041.65

◇CREDITS WILL BE DETERMINED WHEN THE BUILDING PERMIT APPLICATION IS SUBMITTED FOR BWS REVIEW AND APPROVAL.

THIS ESTIMATE IS SUBJECT TO CHANGE. A FORMAL WRITTEN QUOTATION MAY BE OBTAINED AND ALL PAYMENTS FOR THE CHARGES SHOWN ON THE QUOTATION MADE WITHIN 30 DAYS AFTER THE CONSTRUCTION PLAN IS APPROVED BY BWS. IF PAYMENTS ARE NOT RECEIVED WITHIN THE 30 DAY PERIOD, THE PROJECT WILL BE SUBJECT TO THE PREVAILING RATES.

PROPOSED PUBLIC ROAD

APPROVED: DATE:

Chief, Civil Engineering Branch, DPP — 7/18/00

Chief, Wastewater Branch, DPP — 7/25/00

Chief, Traffic Review Branch, DPP — 8/3/00

for Chief, Planning & Engineering, BWS — 7-14-00

REVISION	DATE	DESCRIPTION	MADE BY	APPROVED
1	7/3/00	ADDED 10' LANDSC. STRIP ALONG ILALO STREET	LSY	KS 7/14/00 BWS DATE
2	8/24/00	ADDED CONC. SLAB FOR FH	LSY	KS 11/1/00 BWS DATE
3	7/3/01	ADDED 10' WIDE LANDSCAPE STRIP ALONG ILALO STREET	LSY	10/30/01 CCD DATE

R. M. TOWILL CORPORATION
Planning – Engineering – Environmental Services – Photogrammetry – Surveying – Construction Management
808 842 1133 420 Waiakamilo Road Suite 411 Honolulu Hawaii 96817-4941

GREG H. HIYAKUMOTO LICENSED PROFESSIONAL ENGINEER No. 6662-C HAWAII, U.S.A.

THIS WORK WAS PREPARED BY ME OR UNDER MY SUPERVISION.

BY: R.M. TOWILL CORPORATION

HAWAII COMMUNITY DEVELOPMENT AUTHORITY
STATE OF HAWAII
HONOLULU, HAWAII

KAKA'AKO COMMUNITY DEVELOPMENT DISTRICT
IMPROVEMENT DISTRICT 9
ILALO STREET IMPROVEMENTS

ILALO STREET
PLAN AND PROFILE - 2
4+50 TO 9+00

ENGINEER: LSY CHECKED BY: GHH
DRAFTSMAN: BEY DATE: JULY 13, 2000

EXECUTIVE DIRECTOR, HAWAII COMMUNITY DEVELOPMENT AUTHORITY

PROFILE

SCALE: HORIZ. 1" = 20' VERT. 1" = 4'

GRAPHIC SCALES: 1"=20' 20 0 20 40 1"=4' 4 0 4 8 SCALE IN FEET

SEWER FLOW DATA (SMH 3 TO SMH 3A) n = 0.015 S = 0.0032 Qr = 0.807 mgd Qa = 1.129 mgd Vr = 2.3 fps Va = 2.2 fps

SEWER FLOW DATA (SMH 3A TO SMH 4) n = 0.015 S = 0.0032 Qr = 0.742 mgd Qa = 1.129 mgd Vr = 2.4 fps Va = 2.2 fps

SEWER FLOW DATA (SMH 4 TO SMH 5) n = 0.015 S = 0.0032 Qr = 0.839 mgd Qa = 2.047 mgd Vr = 2.5 fps Va = 2.6 fps

EXISTING GROUND ALONG LEFT R/W

DEMOLISH & ABANDON

-0.50%

HGL

W6 W8

SMH

5+42 FH CONN

5+13

5+21 PI

EXISTING GROUND ALONG RIGHT R/W

0.50%

DEMOLISH & REMOVE EX. S6

5+21 1-1/8 BEND (TV) 1-CONC. BLK. 0.71 W12

132 LF 12" VCP @ 0.32% S6

5+18 1-1/8 BEND (BV) 1-CONC. BLK. (-)2.29 W12

CB 3 0.27 D18

CB 4 1.23 D18

1-1/8 BEND (TV) 1-CONC. BLK. (-)2.29 W12

1-1/8 BEND (BV) 1-CONC. BLK. 0.69 W12

1-12" X 6" TEE 1-CONC. BLK. 1.04 W8 0.87 W12

SMH 3A S8 (-)7.17 S12 (-)7.67

4+69

4+63

5+08

5+05

INVERT OF 12" PVC WATER LINE

1-12" X 6" TEE 1-CONC. BLK. 1.11 W8 0.95 W12

5+68

SMH 4 S8 (-)7.89 S12 (-)8.22 S15 (-)8.47

1-12"x12" CROSS W12 1.36

6+17.5

6+44

6+50

DEFLECT W12 1.36

172 LF 12" VCP @ 0.32%

6+74.9

1-1/8 BEND (BV) (-)3.25 W12

1-1/8 BEND (TV) 1.36 W12

6+79.9

6+89.9

6+94.9

7+00.5

7+08.4

7+34

7+35

DMH 1 (-)0.67 D18

1-1/8 BEND (BV) (-)3.35 W12

45 LF 18" RCP CL. III @ 0.50%

DEFLECT 1.18 W12

DI 4 0.47 D6 (-)0.03 D18

DMH 2 (-)0.38 D18 (-)0.89 D18

1-1/8 BEND (TV) 1.18 W12

101 LF 18" RCP, CL. III @ 0.5%

155 LF 15" VCP @ 0.32%

S6

8+00

8+30.8

8+36

8+54

8+68

8+98

1-1/8 BEND (TV) 0.63 W12

107.4 LF 18" RCP, CL. III @ 0.5%

267 LF 15" VCP @ 0.32%

1-1/8 BEND (BV) (-)3.98 W12

1-12"x8" CROSS W6 1.07 W12 0.90

CB 6 (-)1.40 D18

CB 5 (-)1.18 D18

PI/INTERS. 5.98

PI 5.12

6+62.08 ILALO ST. =10+00 OHE ST.

3/4" ARV

7+40 FH CONN

26 LF DIP W/ CONC JACKET

25 LF DIP W/ CONC JACKET

FINISH CURB GRADE

MATCH LINE SEE SHEET C-9

MATCH LINE SEE SHEET C-11

4+50

5+00

6+00

7+00

8+00

9+00

10

0

-10

PLAN2.dwg 7-14-00 11:42:49 am EST

"RECORD DRAWINGS" C-10 SHEET 17 OF 140 SHEETS

FILE	POCKET	FOLDER	NO.

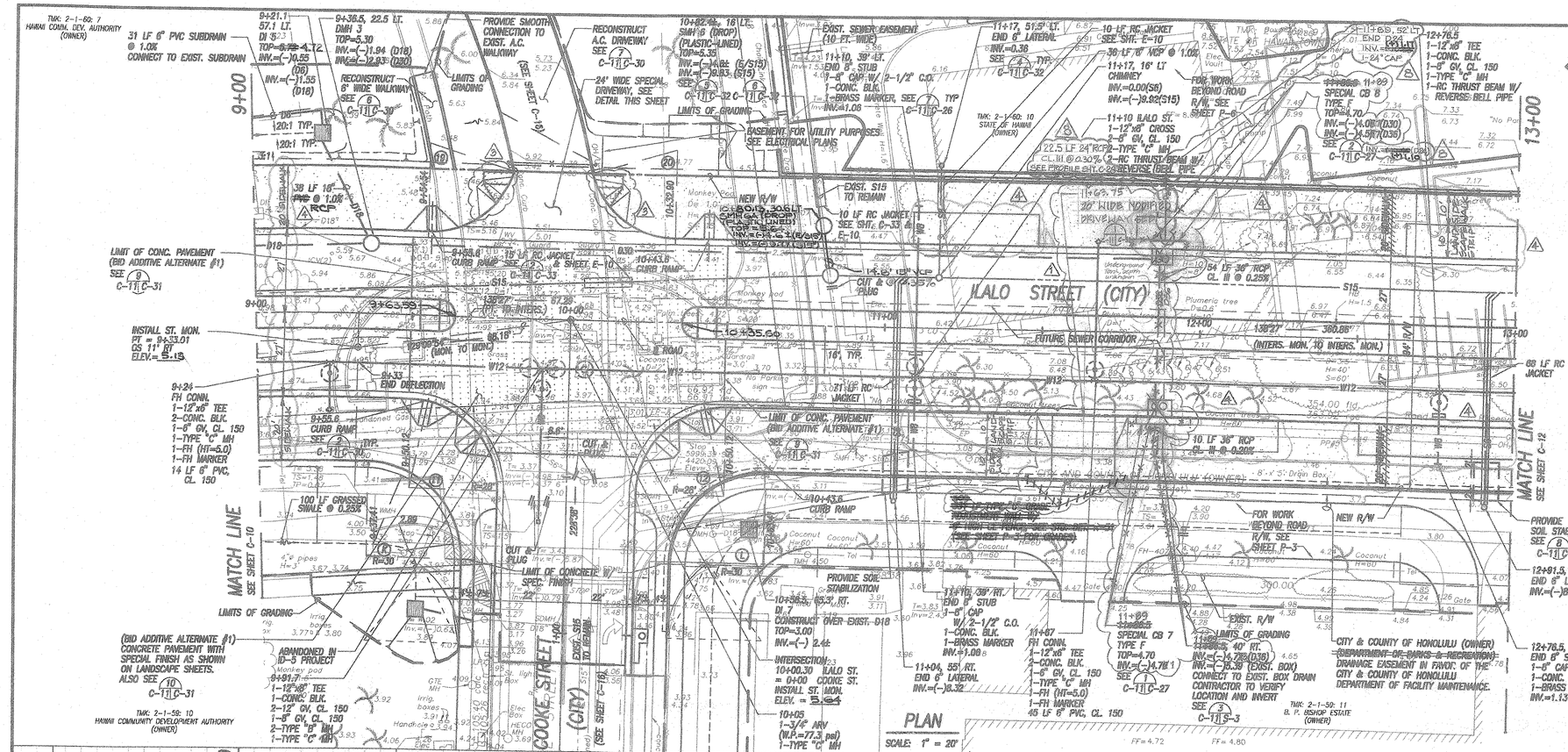

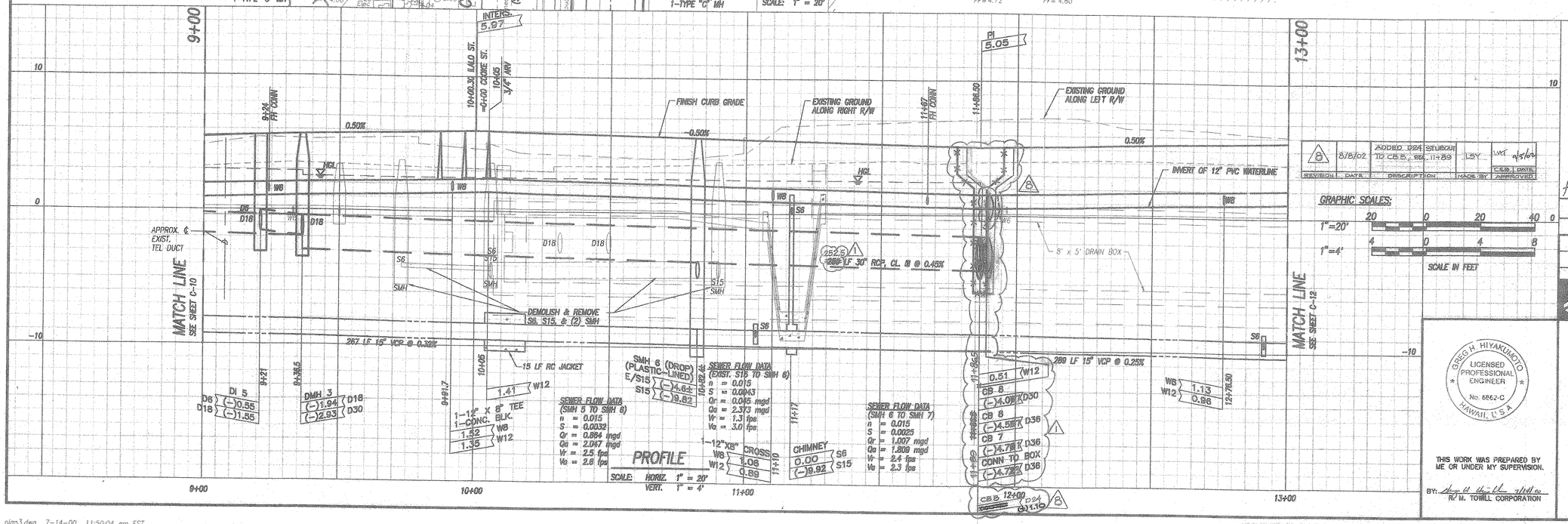

CURB RETURN DATA						
CURVE	DELTA	DELTA/2	R	T	C	Lc
(11)	90°11'00"	45°05'30"	28.00	28.09	39.66	44.07
(12)	89°49'00"	44°54'30"	28.00	27.91	39.53	43.89
(19)	73°23'54"	36°41'57"	28.00	20.87	33.47	35.87
(20)	73°23'54"	36°41'57"	28.00	20.87	33.47	35.87

RIGHT-OF-WAY CURVE DATA						
CURVE	DELTA	DELTA/2	R	T	C	Lc
(K)	90°11'00"	45°05'30"	30.00	30.10	42.49	47.22
(L)	89°49'00"	44°54'30"	30.00	29.90	42.36	47.03

NOTE
1. SEE NOTES ON SHEET C-9.

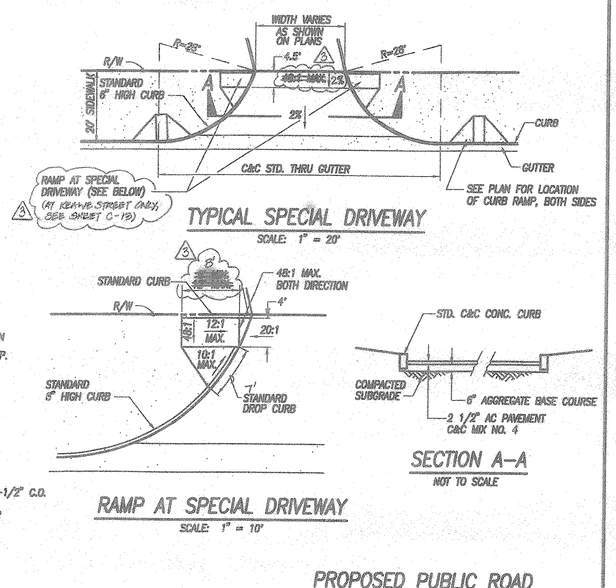

PROPOSED PUBLIC ROAD

APPROVED: DATE:

Chief, Civil Engineering Branch, DPP — 7/18/00

Dennis M. Nishimura — Chief, Wastewater Branch, DPP — 7/25/00

Chief, Traffic Review Branch, DPP — 8/2/00

Catherine R. Dungca for Chief, Planning & Engineering, BWS — 7-14-00

REVISION	DATE	DESCRIPTION	MADE BY	APPROVED
8	8/8/02	ADDED D24 STUBOUT TO CB 8, STA. 11+89	LSY	9/5/02

GRAPHIC SCALES: 1"=20' 20 0 20 40; 1"=4' 4 0 4 8; SCALE IN FEET

REVISION	DATE	DESCRIPTION	MADE BY	APPROVED
4	7/9/01	ADDED 10' LANDSC. STRIP ALONG ILALO STREET	LSY	10/25/01
4	7/9/01	ADDED 10' WIDE LANDSCAPE STRIP ALONG ILALO STREET	LSY	10/25/01
3	4/11/01	REVISED CURB RAMP LAYOUT	LSY	5/15/01
1	1/9/01	ADDED DRIVEWAY AT 11+68.75, RELOCATED NEW D36	LSY	

Planning – Engineering – Environmental Services – Photogrammetry – Surveying – Construction Management
R. M. TOWILL CORPORATION
608 842 1133 420 Waiakamilo Road Suite 411 Honolulu Hawaii 96817-4941

GREG H. HIYAKUMOTO LICENSED PROFESSIONAL ENGINEER No. 6862-C HAWAII, U.S.A.

THIS WORK WAS PREPARED BY ME OR UNDER MY SUPERVISION.
BY: R. M. TOWILL CORPORATION 7/14/00

HAWAII COMMUNITY DEVELOPMENT AUTHORITY
STATE OF HAWAII
HONOLULU, HAWAII

KAKA'AKO COMMUNITY DEVELOPMENT DISTRICT
IMPROVEMENT DISTRICT 9
ILALO STREET IMPROVEMENTS

ILALO STREET
PLAN AND PROFILE – 3
9+00 TO 13+00

ENGINEER: LSY — CHECKED BY: GHH
DRAFTSMAN: BEY — DATE: JULY 13, 2000

EXECUTIVE DIRECTOR, HAWAII COMMUNITY DEVELOPMENT AUTHORITY

plan3.dwg 7-14-00 11:50:04 am EST

"RECORD DRAWINGS" C-11 SHEET 18 OF 140 SHEETS

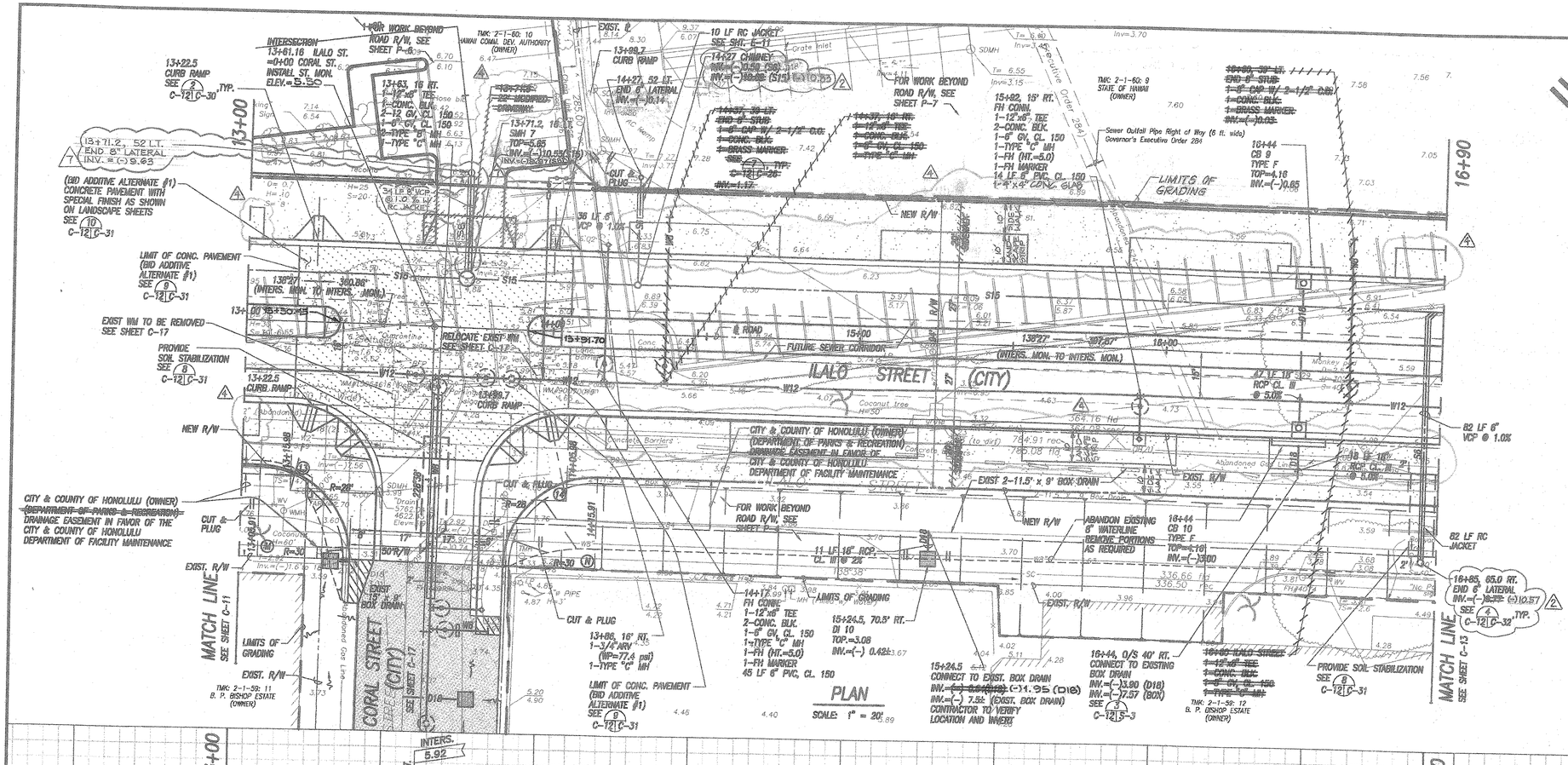

CURB RETURN DATA						
CURVE	Δ	Δ/2	R	T	C	Lc
(13)	90°11'00"	45°05'30"	28.00	28.09	39.66	44.07
(14)	89°49'00"	44°54'30"	28.00	27.91	39.53	43.89

RIGHT-OF-WAY CURVE DATA						
CURVE	Δ	Δ/2	R	T	C	Lc
(W)	91°00'00"	45°30'00"	30.00	30.53	42.90	47.65
(N)	89°00'00"	44°30'00"	30.00	29.48	42.05	46.60

REVISION	DATE	DESCRIPTION	MADE BY	APPROVED
7	8/8/02	ADDED SS LATERAL AT STA. 13+71.2 PER HCDA'S REQUEST TO ACCOMMODATE THE PROPOSED UH HEALTH AND WELLNESS CENTER.	LSY	DMM 9/6/02 WHB DATE
6	7/5/01	ADDED 10' LANDSC. STRIP ALONG ILALO STREET AND DEL. DRIVEWAY AT STA. 15	LSY	KM 7/18/01 WHB DATE
5	8/24/01	ADDED CONC. SLABS FOR FH	LSY	KM 9/11/01 WHB DATE
4	7/9/01	ADDED 10' WIDE LANDSCAPE STRIP ALONG ILALO STREET	LSY	10/31/01 WHB DATE
3	1/9/01	LOWERED SEWER LINE PROFILE BEGAN @ STA. 13+71.2 TO ACCOMMODATE UPPER TRANSITION OF PLANS	LSY	2/15/01 WHB DATE

Planning – Engineering – Environmental Services – Photogrammetry – Surveying – Construction Management
R. M. TOWILL CORPORATION
808 842 1133 420 Waiakamilo Road Suite 411 Honolulu Hawaii 96817-4941

APPROVED: DATE:
Chief, Civil Engineering Branch, DPP — 7/18/00
Chief, Wastewater Branch, DPP — 7/25/00
Chief, Traffic Review Branch, DPP — 8/3/00
for Chief, Planning & Engineering, EWS — 7-14-00

GREG H. HIYAKUMOTO LICENSED PROFESSIONAL ENGINEER No. 6652-C HAWAII, U.S.A.

THIS WORK WAS PREPARED BY ME OR UNDER MY SUPERVISION.
BY: R.M. TOWILL CORPORATION — 7/18/00

HAWAII COMMUNITY DEVELOPMENT AUTHORITY
STATE OF HAWAII
HONOLULU, HAWAII
KAKA'AKO COMMUNITY DEVELOPMENT DISTRICT
IMPROVEMENT DISTRICT 9
ILALO STREET IMPROVEMENTS
ILALO STREET
PLAN AND PROFILE – 4
13+00 TO 16+90

ENGINEER: LSY — CHECKED BY: GHH
DRAFTSMAN: HG — DATE: JULY 13, 2000
EXECUTIVE DIRECTOR, HAWAII COMMUNITY DEVELOPMENT AUTHORITY

FILE	POCKET	FOLDER	NO.

plan4.dwg 7-14-00 1:21:54 pm EST

CURB RETURN DATA						
CURVE	Δ	Δ/2	R	T	C	Lc
(15)	93°56'00"	46°58'00"	28.00	29.99	40.83	45.90
(16)	86°04'00"	43°02'00"	28.00	26.14	38.22	42.06
(21)	73°23'54"	38°41'57"	28.00	20.87	33.47	35.87
(22)	73°23'54"	38°41'57"	28.00	20.87	33.47	35.87

EDGE OF PAVEMENT RETURN DATA						
CURVE	Δ	Δ/2	R	T	C	Lc
(17)	73°23'54"	38°41'57"	28.00	20.87	33.47	35.87
(18)	73°23'54"	38°41'57"	28.00	20.87	33.47	35.87

RIGHT-OF-WAY CURVE DATA						
CURVE	Δ	Δ/2	R	T	C	Lc
(P)	94°45'00"	47°22'30"	30.00	32.60	44.15	49.61
(Q)	85°15'00"	42°37'30"	30.00	27.61	40.63	44.64

(1) CONTRACTOR TO INSTALL TYPE D LATERAL AND ALL NECESSARY FITTINGS TO ACCOMMODATE THE RELOCATION OF THE EXISTING 1-1/2" METER, TYPE III BOX AND ALL APPURTENANCES IN ACCORDANCE WITH BWS STANDARDS. CONTRACTOR TO RELOCATE THE EXISTING METER, LOCATE AND RECONNECT TO THE EXISTING PROPERTY PIPE. ALSO, CONTRACTOR TO CUT AND PLUG EXISTING LATERAL AT MAIN. WORK TO BE COORDINATED WITH BWS INSPECTOR. M/N 8582867 PREM 1078935
CONTRACTOR TO INSTALL NEW BWS APPROVED REDUCED PRESSURE BACKFLOW PREVENTER AFTER METER PRIOR TO ANY TEES OR BRANCHES PER BWS STD. DET. 126.
CONTRACTOR TO FIELD VERIFY OPERATIONAL STATUS OF THE EXISTING LATERAL UPON COMPLETION OF DEMOLITION WORK.

NOTE

1. SEE NOTES ON SHEET C-8

REV.	DATE	DESCRIPTION	MADE BY	APPROVED
4	7/9/01	ADDED 10' LANDSCAPE STRIP ALONG ILALO STREET	LSY	KA 7/10/01 BWS DATE
3	7/3/01	ADDED CONC SLAB FOR PH	LSY	KA 7/10/01 BWS DATE
2	1/31/01	REALIGNED WTR BUTTLINE & REV. RC JACKET LENGTH (SHT. E-12A)	LSY	WMD 2/5/01
1	1/9/01	LOWERED SEWER LINE PROFILE BECAUSE OF EXISTING WATER MAIN. GRADED 25' TO LINE	LSY	CBS 1/16/01 WMD 2/5/01

APPROVED:

Chief, Civil Engineering Branch, DPP — DATE: 7/18/00

Chief, Wastewater Branch, DPP — 7/25/00

Chief, Traffic Review Branch, DPP (For construction within City R.O.W. only) — 8/1/00

for Chief, Planning & Engineering, BWS — 7-14-00

GRAPHIC SCALES:

1"=20' 20 0 20 40

1"=4' 4 0 4 8

SCALE IN FEET

Planning – Engineering – Environmental Services – Photogrammetry – Surveying – Construction Management

R. M. TOWILL CORPORATION

808 842 1133 420 Waiakamilo Road Suite 411 Honolulu Hawaii 96817-4941

GREG H. HIYAKUMOTO LICENSED PROFESSIONAL ENGINEER No. 5662-C HAWAII, U.S.A.

THIS WORK WAS PREPARED BY ME OR UNDER MY SUPERVISION.

BY: [signature] 7/18/00

R. M. TOWILL CORPORATION

HAWAII COMMUNITY DEVELOPMENT AUTHORITY
STATE OF HAWAII
HONOLULU, HAWAII

KAKA'AKO COMMUNITY DEVELOPMENT DISTRICT

IMPROVEMENT DISTRICT 9

ILALO STREET IMPROVEMENTS

ILALO STREET
PLAN AND PROFILE - 5
16+90 TO 21+45.86

ENGINEER: LSY — CHECKED BY: GHH

DRAFTSMAN: HG — DATE: JULY 13, 2000

EXECUTIVE DIRECTOR, HAWAII COMMUNITY DEVELOPMENT AUTHORITY

FILE	POCKET	FOLDER	NO.

"RECORD DRAWINGS" C-13 SHEET 20 OF 140 SHEETS

plan5.dwg 7-14-00 8:12:51 am EST

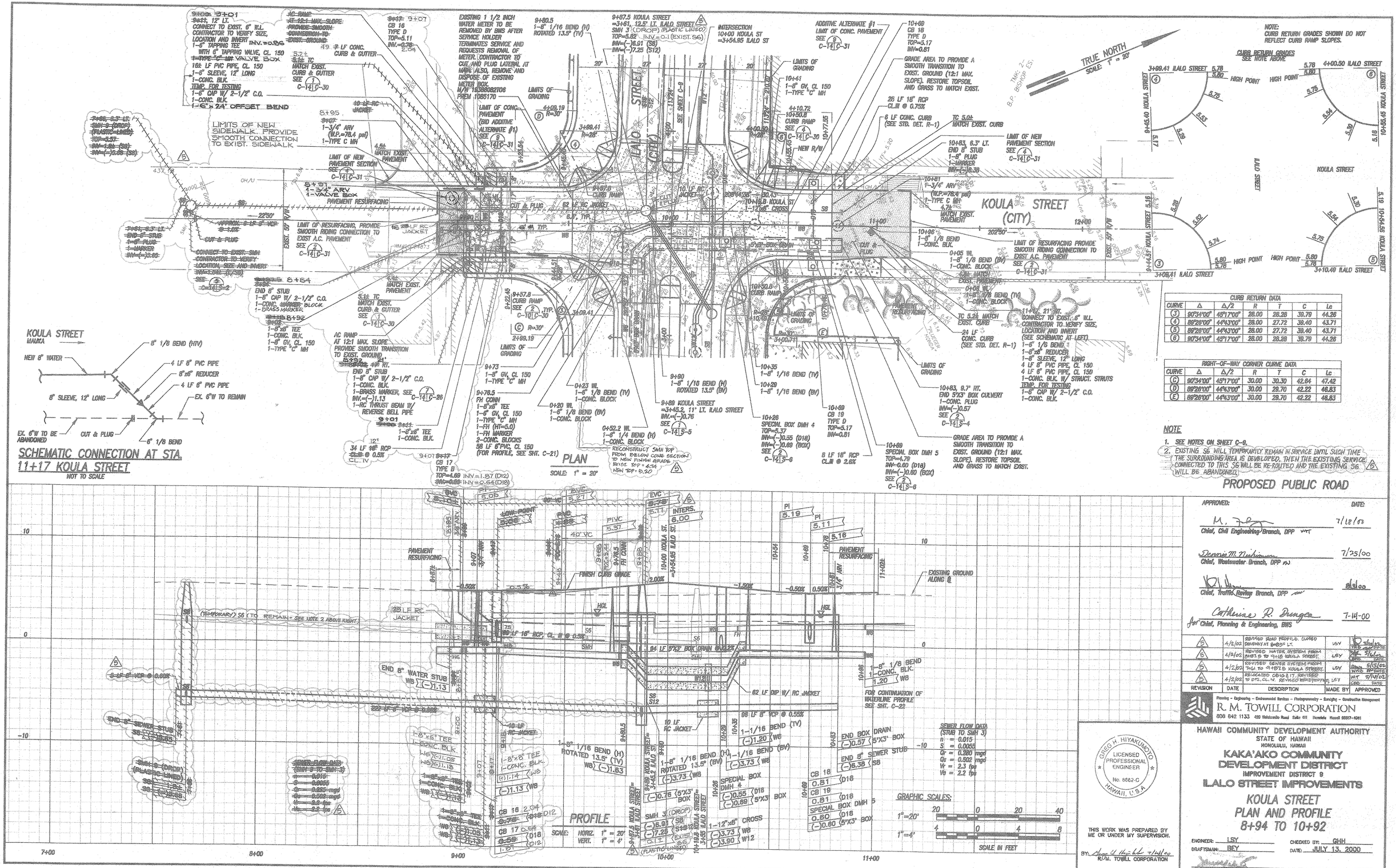

APPROVED: DATE:

Chief, Civil Engineering Branch, DPP — 7/18/00

Chief, Wastewater Branch, DPP — 7/25/00

Chief, Traffic Review Branch, DPP — 8/1/00

for Chief, Planning & Engineering, BWS — 7-14-00

REVISION	DATE	DESCRIPTION	MADE BY	APPROVED
5	4/2/02	REVISED ROAD PROFILES. CLOSED DRIVEWAY AT 8+85± LT.	LSY	LSY 5/15/02
6	4/2/02	REVISED WATER SYSTEM FROM 8+87.5 TO 9+18 KOULA STREET.	LSY	BEY 5/15/02
5	4/2/02	REVISED SEWER SYSTEM FROM MH 1 TO 9+97.6 KOULA STREET.	LSY	Bwsm 5/15/02 WWB APPROVE
5	4/2/02	RELOCATED CB 16 LT. REVISED GRADES TO DTL. CL. IV. REVISED HEADPOSTS	LSY	MT 5/14/02 CBC DATE

Planning – Engineering – Environmental Services – Photogrammetry – Surveying – Construction Management
R. M. TOWILL CORPORATION
(808) 842 1133 420 Waiakamilo Road Suite 411 Honolulu Hawaii 96817-4941

GREG H. HIYAKUMOTO LICENSED PROFESSIONAL ENGINEER No. 6662-C HAWAII, U.S.A.

THIS WORK WAS PREPARED BY ME OR UNDER MY SUPERVISION.

BY: [signature] 7/14/00
R.M. TOWILL CORPORATION

HAWAII COMMUNITY DEVELOPMENT AUTHORITY
STATE OF HAWAII
HONOLULU, HAWAII

KAKA'AKO COMMUNITY DEVELOPMENT DISTRICT
IMPROVEMENT DISTRICT 9
ILALO STREET IMPROVEMENTS

KOULA STREET
PLAN AND PROFILE
8+94 TO 10+92

ENGINEER: LSY CHECKED BY: GHH
DRAFTSMAN: BEY DATE: JULY 13, 2000

EXECUTIVE DIRECTOR, HAWAII COMMUNITY DEVELOPMENT AUTHORITY

FILE	POCKET	FOLDER	NO.

koula.dwg 7-14-00 8:15:20 am EST

"RECORD DRAWINGS" C-14 SHEET 21 OF 140 SHEETS

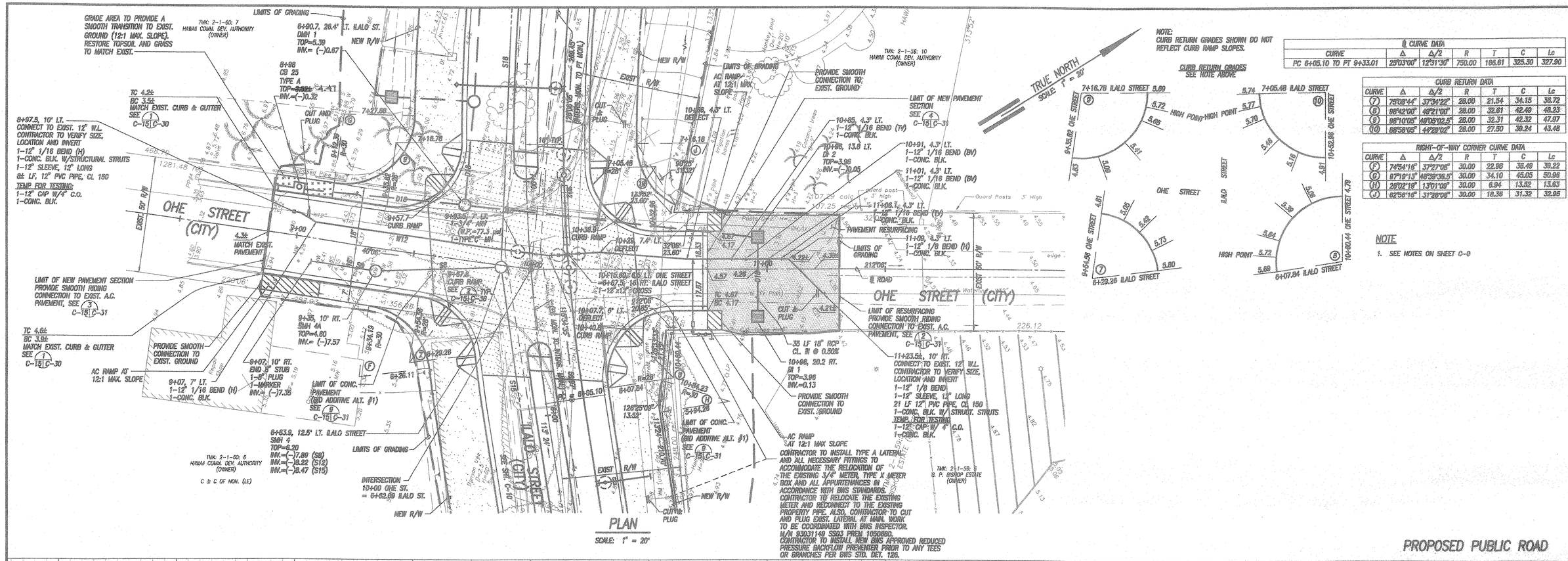

R CURVE DATA						
CURVE	Δ	Δ/2	R	T	C	Lc
PC 6+05.10 TO PT 9+33.01	25°03'00"	12°31'30"	750.00	166.61	325.30	327.90

CURB RETURN DATA						
CURVE	Δ	Δ/2	R	T	C	Lc
⑦	75°08'44"	37°34'22"	28.00	21.54	34.15	36.72
⑧	86°42'00"	43°21'00"	28.00	32.61	42.49	48.23
⑨	95°10'05"	47°35'02.5"	28.00	32.31	42.32	47.97
⑩	88°58'05"	44°29'02"	28.00	27.50	39.24	43.48

RIGHT-OF-WAY CORNER CURVE DATA						
CURVE	Δ	Δ/2	R	T	C	Lc
(F)	74°54'16"	37°27'08"	30.00	22.96	36.49	39.22
(G)	97°19'13"	48°39'36.5"	30.00	34.10	45.05	50.96
(H)	26°02'18"	13°01'09"	30.00	6.94	13.52	13.63
(J)	62°56'16"	31°28'08"	30.00	18.36	31.32	32.95

NOTE
1. SEE NOTES ON SHEET C-9

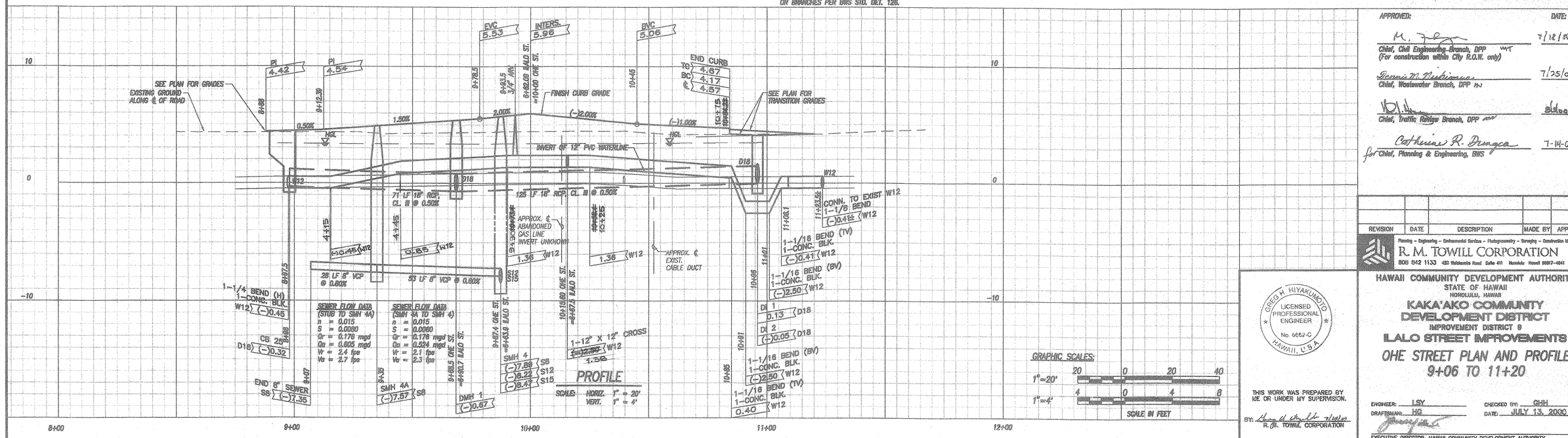

GRAPHIC SCALES:
1"=20' 20 0 20 40
1"=4' 4 0 4 8
SCALE IN FEET

GREG H. HIYAKUMOTO LICENSED PROFESSIONAL ENGINEER No. 6652-C HAWAII, U.S.A.

THIS WORK WAS PREPARED BY ME OR UNDER MY SUPERVISION.
BY: [signature] 7/18/00
R. M. TOWILL CORPORATION

APPROVED: DATE:
[signature] 7/18/00
Chief, Civil Engineering Branch, DPP (For construction within City R.O.W. only)
[signature] 7/25/00
Chief, Wastewater Branch, DPP
[signature] 8/1/00
Chief, Traffic Review Branch, DPP
[signature] 7-14-00
for Chief, Planning & Engineering, BWS

REVISION	DATE	DESCRIPTION	MADE BY	APPROVED

Planning – Engineering – Environmental Services – Photogrammetry – Surveying – Construction Management
R. M. TOWILL CORPORATION
808 842 1133 420 Waiakamilo Road Suite 411 Honolulu Hawaii 96817-4941

HAWAII COMMUNITY DEVELOPMENT AUTHORITY
STATE OF HAWAII
HONOLULU, HAWAII
KAKA'AKO COMMUNITY DEVELOPMENT DISTRICT
IMPROVEMENT DISTRICT 9
ILALO STREET IMPROVEMENTS
OHE STREET PLAN AND PROFILE
9+06 TO 11+20

ENGINEER: LSY CHECKED BY: GHH
DRAFTSMAN: HG DATE: JULY 13, 2000
EXECUTIVE DIRECTOR, HAWAII COMMUNITY DEVELOPMENT AUTHORITY

FILE	POCKET	FOLDER	NO.

obe.dwg 7-14-00 1:26:02 pm EST

"RECORD DRAWINGS" C-15 SHEET 22 OF 140 SHEETS

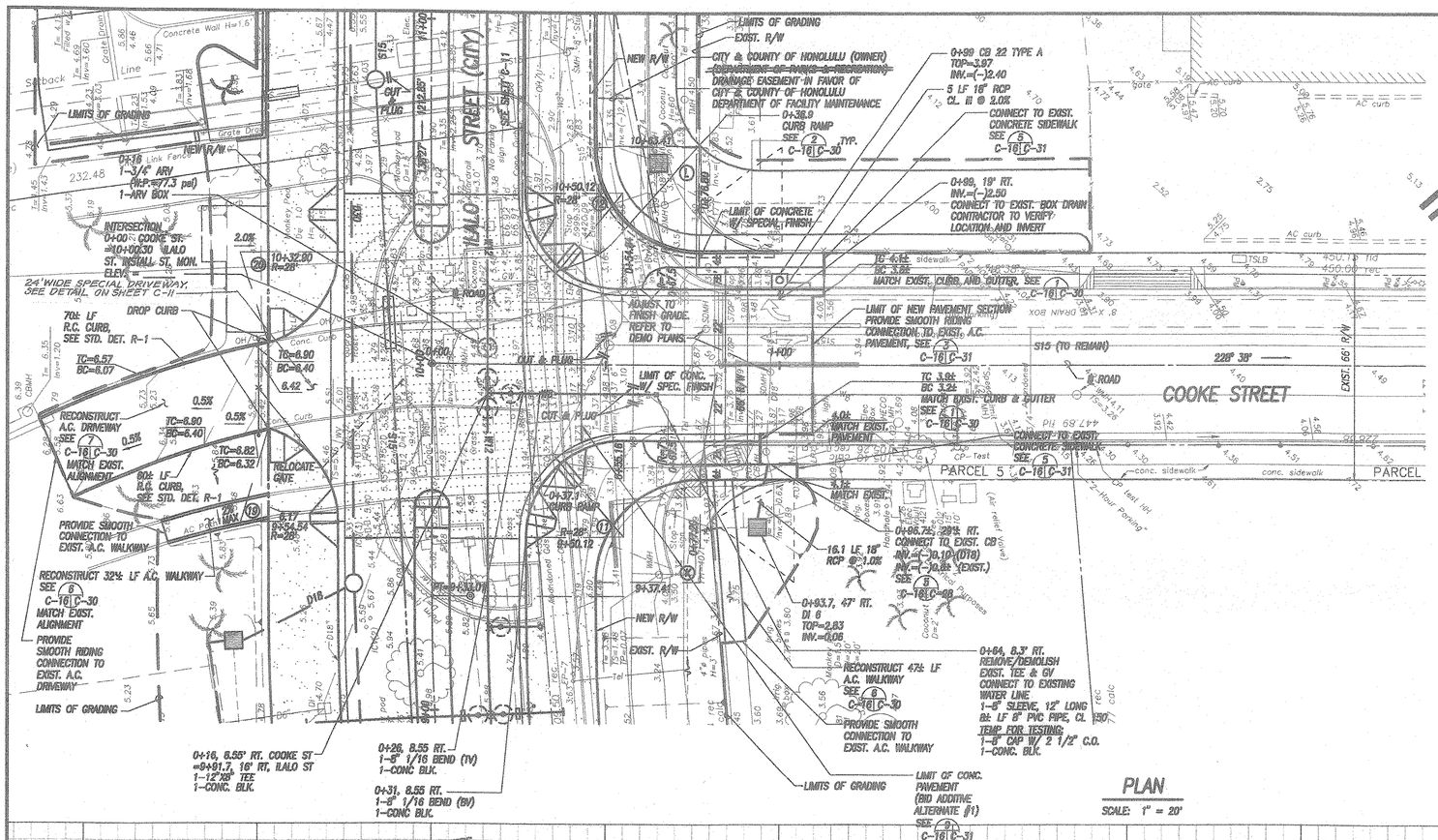

PLAN
SCALE: 1" = 20'

CURB RETURN DATA						
CURVE	DELTA	DELTA/2	R	T	C	Lc
(11)	90°11'00"	45°05'30"	28.00	28.09	39.66	44.07
(12)	89°48'00"	44°54'30"	28.00	27.91	39.53	43.89
(19)	73°23'54"	36°41'57"	28.00	20.87	33.47	35.87
(20)	73°23'54"	36°41'57"	28.00	20.87	33.47	35.87

RIGHT-OF-WAY CORNER CURVE DATA						
CURVE	DELTA	DELTA/2	R	T	C	Lc
(K)	90°11'00"	45°05'30"	30.00	30.10	42.49	47.22
(L)	89°48'00"	44°54'30"	30.00	29.90	42.36	47.03

NOTES

1. SEE NOTES ON SHEET C-9.

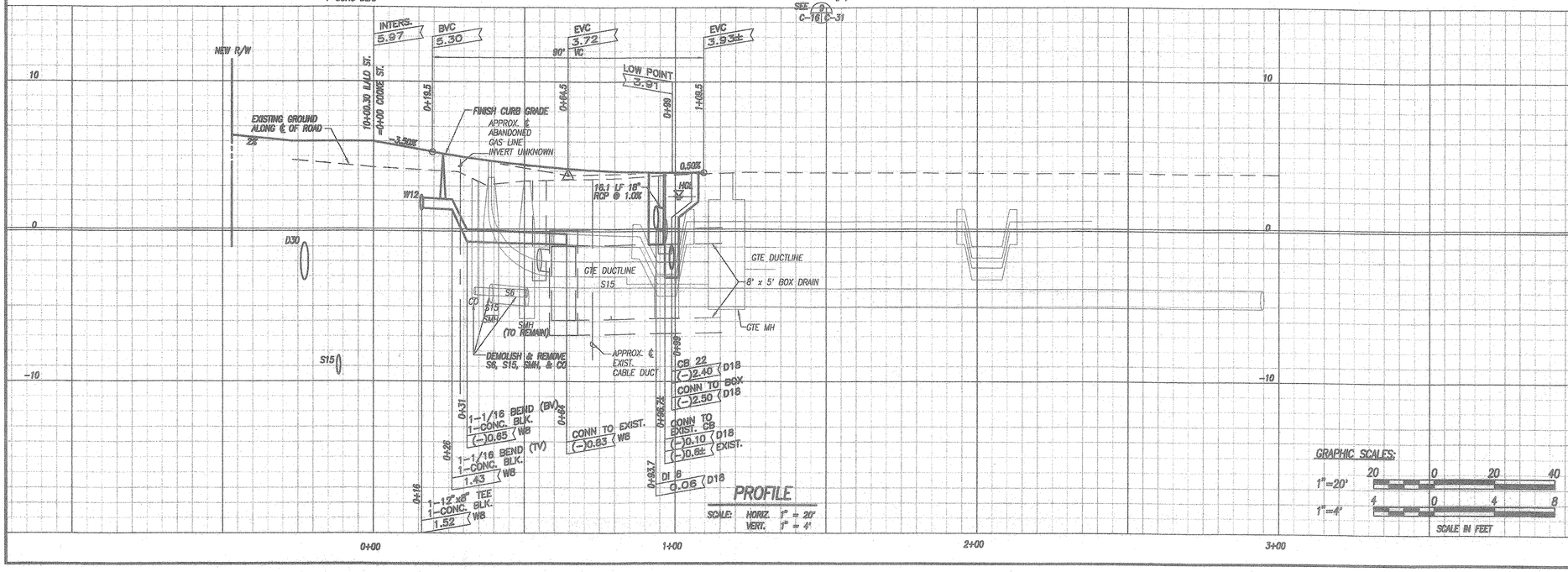

PROFILE
SCALE: HORIZ. 1" = 20'
VERT. 1" = 4'

PROPOSED PUBLIC ROAD

APPROVED: DATE:

M. [signature] 7/18/00
Chief, Civil Engineering Branch, DPP

Dennis M. Nishimura 7/25/00
Chief, Wastewater Branch, DPP

[signature] 8/3/00
Chief, Traffic Review Branch, DPP

Catherine R. Drungca 7-14-00
for Chief, Planning & Engineering, DWS

REVISION	DATE	DESCRIPTION	MADE BY	APPROVED

Planning – Engineering – Environmental Services – Photogrammetry – Surveying – Construction Management
R. M. TOWILL CORPORATION
808 842 1133 420 Waiakamilo Road Suite 411 Honolulu Hawaii 96817-4941

GREG H. HIYAKUMOTO LICENSED PROFESSIONAL ENGINEER No. 6662-C HAWAII, U.S.A.

THIS WORK WAS PREPARED BY ME OR UNDER MY SUPERVISION.

BY: [signature] 7/14/00
R.M. TOWILL CORPORATION

GRAPHIC SCALES:
1"=20' 20 0 20 40
1"=4' 4 0 4 8
SCALE IN FEET

HAWAII COMMUNITY DEVELOPMENT AUTHORITY
STATE OF HAWAII
HONOLULU, HAWAII

KAKA'AKO COMMUNITY DEVELOPMENT DISTRICT
IMPROVEMENT DISTRICT 9
ILALO STREET IMPROVEMENTS

COOKE STREET
PLAN AND PROFILE
0+00 TO 1+03.75

ENGINEER: LSY CHECKED BY: GHH
DRAFTSMAN: BEY DATE: JULY 13, 2000

EXECUTIVE DIRECTOR, HAWAII COMMUNITY DEVELOPMENT AUTHORITY

FILE	POCKET	FOLDER	NO.

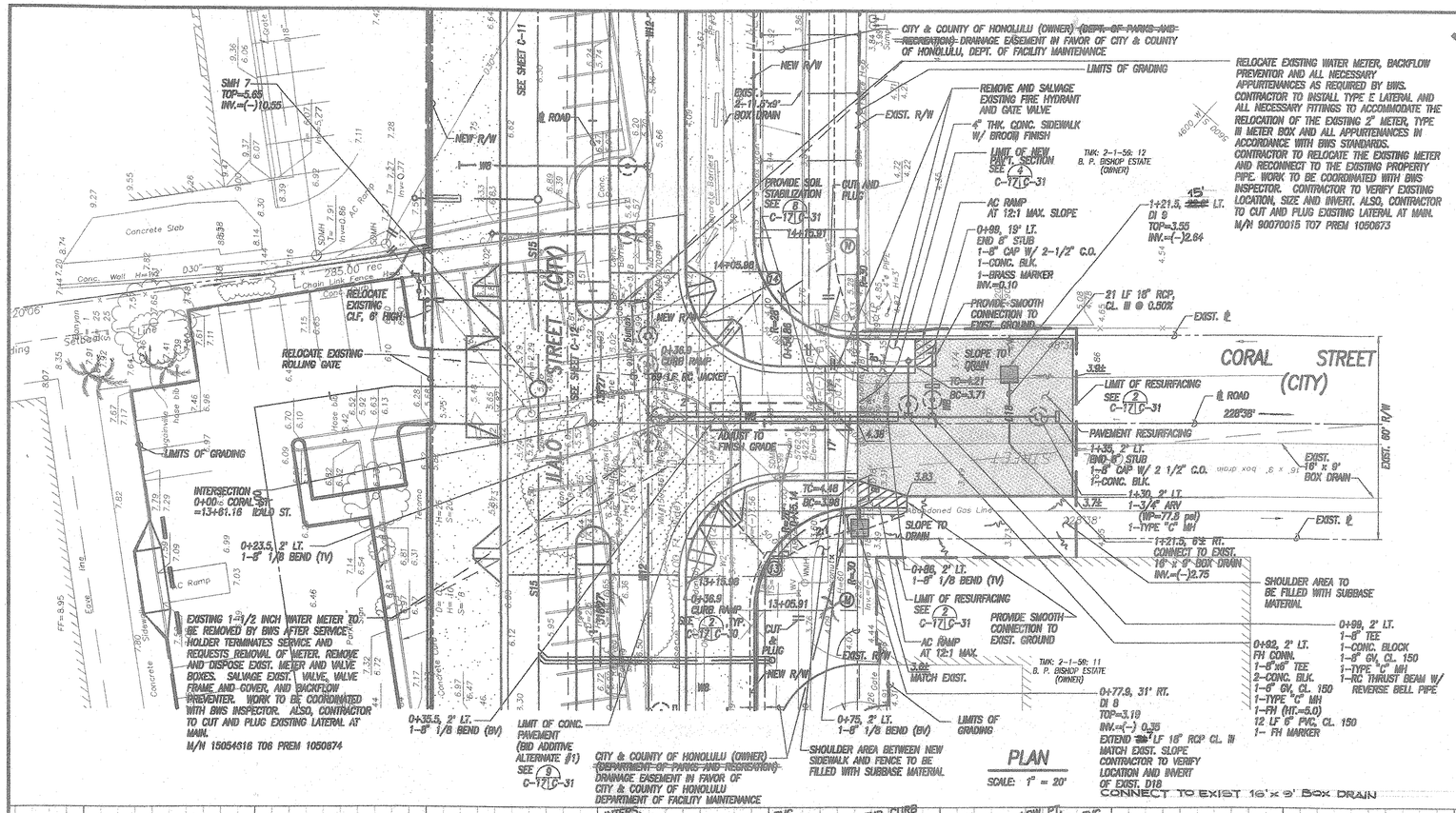
SEE SHEET C-11
SEE SHEET C-12
ILALO STREET (CITY)
CORAL STREET (CITY)
CITY & COUNTY OF HONOLULU (OWNER) ~~(DEPT. OF PARKS AND RECREATION)~~ DRAINAGE EASEMENT IN FAVOR OF CITY & COUNTY OF HONOLULU, DEPT. OF FACILITY MAINTENANCE
LIMITS OF GRADING
RELOCATE EXISTING WATER METER, BACKFLOW PREVENTOR AND ALL NECESSARY APPURTENANCES AS REQUIRED BY BWS. CONTRACTOR TO INSTALL TYPE E LATERAL AND ALL NECESSARY FITTINGS TO ACCOMMODATE THE RELOCATION OF THE EXISTING 2" METER, TYPE III METER BOX AND ALL APPURTENANCES IN ACCORDANCE WITH BWS STANDARDS. CONTRACTOR TO RELOCATE THE EXISTING METER AND RECONNECT TO THE EXISTING PROPERTY PIPE. WORK TO BE COORDINATED WITH BWS INSPECTOR. CONTRACTOR TO VERIFY EXISTING LOCATION, SIZE AND INVERT. ALSO, CONTRACTOR TO CUT AND PLUG EXISTING LATERAL AT MAIN.
M/N 80070015 T07 PREM 1050873
REMOVE AND SALVAGE EXISTING FIRE HYDRANT AND GATE VALVE
4" THK. CONC. SIDEWALK W/ BROOM FINISH
LIMIT OF NEW PAVT. SECTION SEE 4 C-17 C-31
TMK: 2-1-59: 12 B. P. BISHOP ESTATE (OWNER)
PROVIDE SOIL STABILIZATION SEE 6 C-17 C-31
CUT AND PLUG
AC RAMP AT 12:1 MAX. SLOPE
0+98, 19' LT. END 8" STUB 1-8" CAP W/ 2-1/2" C.O. 1-CONC. BLK. 1-BRASS MARKER INV.=5.10
1+21.5, 15' LT. DI 9 TOP=3.55 INV.=(-)2.84
21 LF 18" RCP, CL. III @ 0.50%
PROVIDE SMOOTH CONNECTION TO EXIST. GROUND
EXIST. ℄
SLOPE TO DRAIN
0+36.9 CURB RAMP TYP. 2 C-17 C-30
0+36.9 CURB RAMP
0+36.9 CURB RAMP
0+37.0 CURB RAMP
0+36.9 CURB RAMP
0+36.9 CURB RAMP
0+36.9

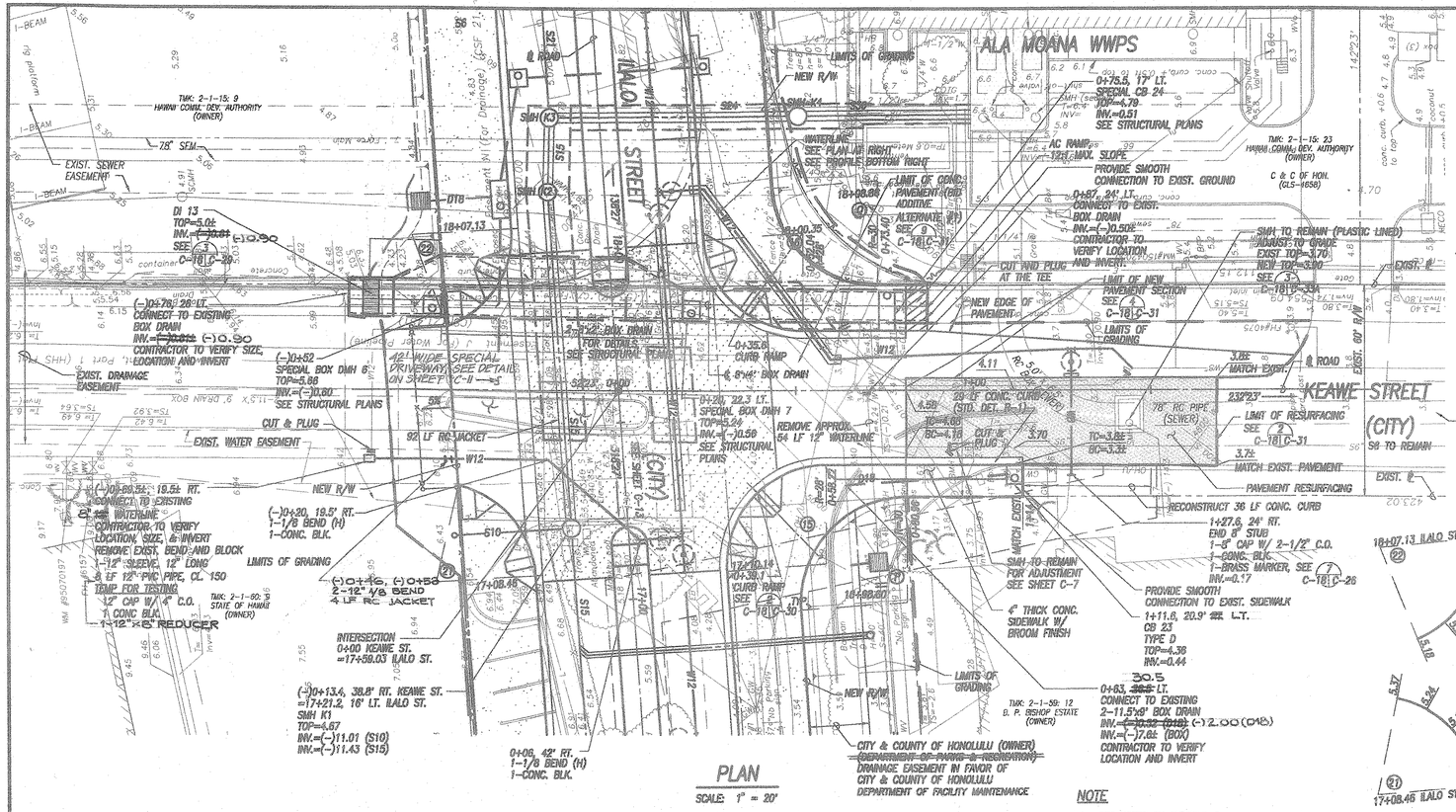

PLAN

SCALE: 1" = 20'

NOTE

1. SEE NOTES ON SHEET C-8

CURB RETURN DATA						
CURVE	Δ	Δ/2	R	T	C	Lc
(15)	93°58'00"	46°59'00"	28.00	29.99	40.93	45.90
(16)	86°04'00"	43°02'00"	28.00	26.14	38.22	42.06
(21)	73°23'54"	36°41'57"	28.00	20.67	33.47	35.87
(22)	73°23'54"	36°41'57"	28.00	20.67	33.47	35.87

RIGHT-OF-WAY CURVE DATA						
CURVE	Δ	Δ/2	R	T	C	Lc
(P)	93°58'00"	46°59'00"	30.00	32.13	43.86	49.18
(Q)	86°04'00"	43°02'00"	30.00	26.01	40.95	45.06

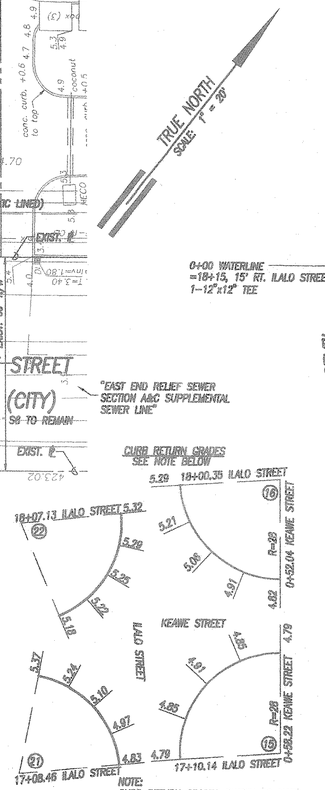

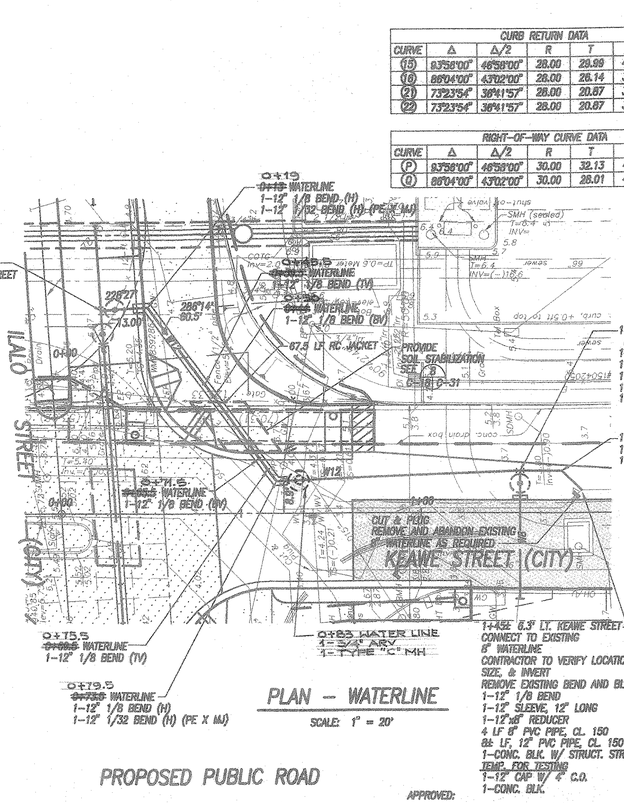

PLAN — WATERLINE

SCALE: 1" = 20'

PROPOSED PUBLIC ROAD

APPROVED: DATE:

7/18/00
Chief, Civil Engineering Branch, DPP (For construction within City R.O.W. only)

7/25/00
Chief, Wastewater Branch, DPP

8/3/00
Chief, Traffic Review Branch, DPP

7-14-00
for Chief, Planning & Engineering, BWS

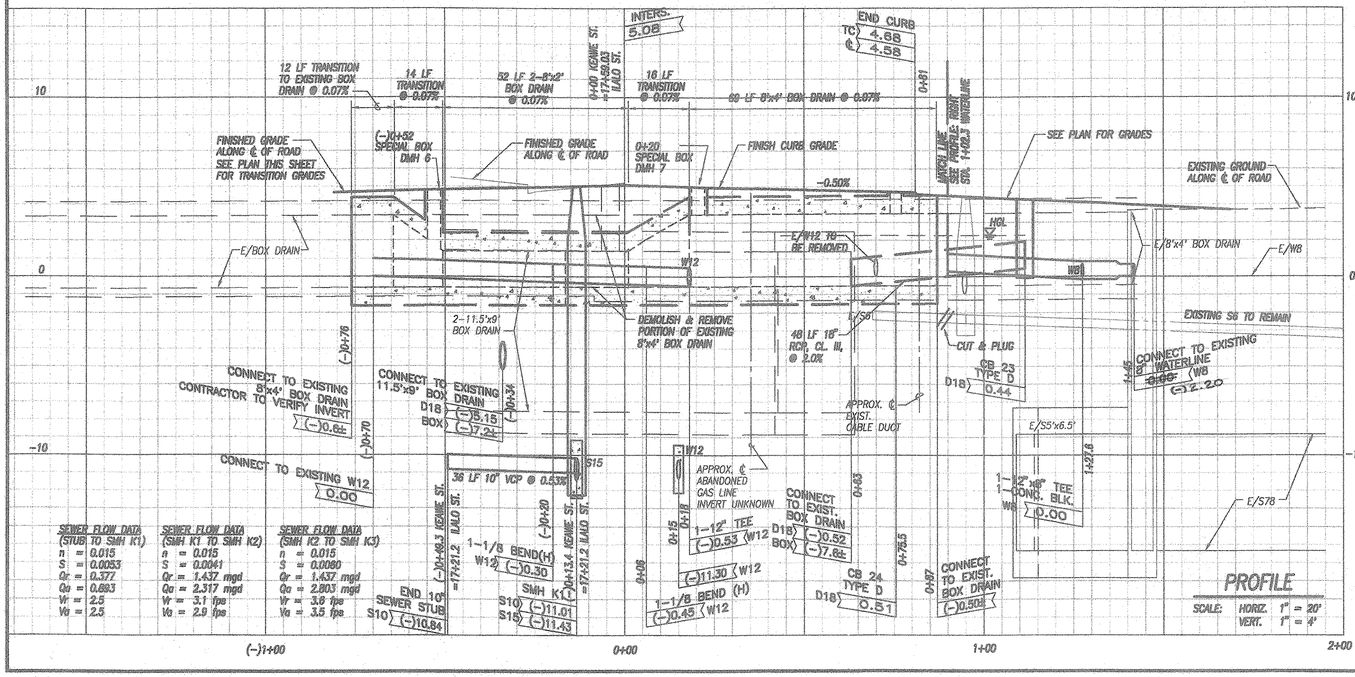

PROFILE

SCALE: HORZ. 1" = 20' VERT. 1" = 4'

PROFILE — WATERLINE

SCALE: HORZ. 1" = 20' VERT. 1" = 4'

GRAPHIC SCALES:

1"=20' 20 0 20 40

1"=4' 4 0 4 8

SCALE IN FEET

REVISION	DATE	DESCRIPTION	MADE BY	APPROVED

Planning – Engineering – Environmental Services – Photogrammetry – Surveying – Construction Management

R. M. TOWILL CORPORATION

808 842 1133 420 Waiakamilo Road Suite 411 Honolulu Hawaii 96817-4941

GREG H. HIYAKUMOTO LICENSED PROFESSIONAL ENGINEER No. 8562-C HAWAII, U.S.A.

THIS WORK WAS PREPARED BY ME OR UNDER MY SUPERVISION.

BY: 7/14/00
R. M. TOWILL CORPORATION

HAWAII COMMUNITY DEVELOPMENT AUTHORITY
STATE OF HAWAII
HONOLULU, HAWAII

KAKA'AKO COMMUNITY DEVELOPMENT DISTRICT
IMPROVEMENT DISTRICT 9
ILALO STREET IMPROVEMENTS

KEAWE STREET
PLAN AND PROFILE
0+00 TO 1+68.5

ENGINEER: LSY CHECKED BY: GHH
DRAFTSMAN: HG DATE: JULY 13, 2000

EXECUTIVE DIRECTOR, HAWAII COMMUNITY DEVELOPMENT AUTHORITY

FILE	POCKET	FOLDER	NO.

keawe.dwg 7-14-00 1:53:56 pm EST

"RECORD DRAWINGS" C-18 SHEET 25 OF 140 SHEETS

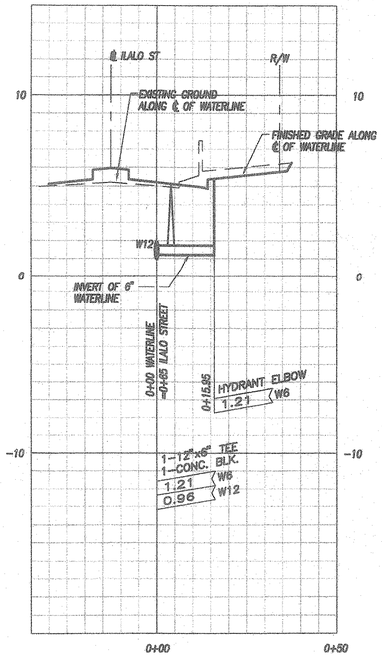

PROFILE – FH CONN.
AT 0+65 ILALO STREET

SCALE: HORIZ. 1" = 20'
VERT. 1" = 4'

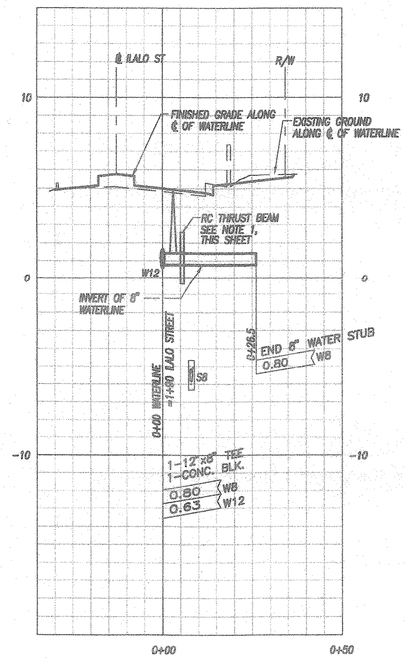

PROFILE – 8" WATERLINE
AT 1+90 ILALO STREET

SCALE: HORIZ. 1" = 20'
VERT. 1" = 4'

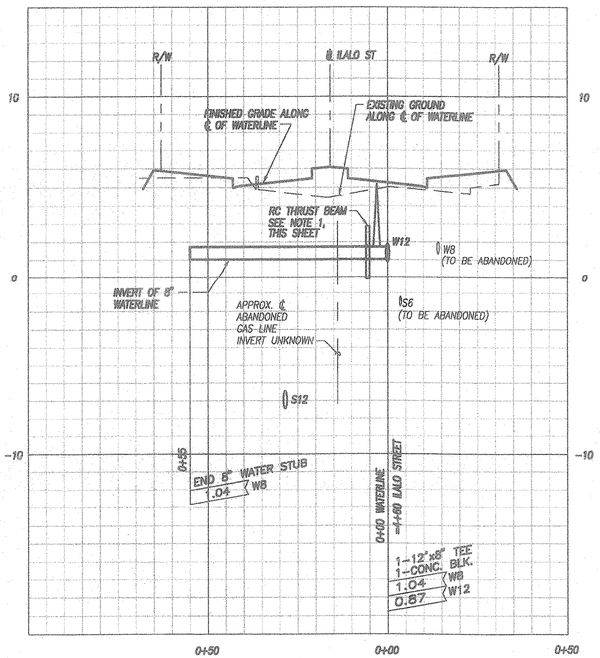

PROFILE – 8" WATERLINE
AT 4+60 ILALO STREET

SCALE: HORIZ. 1" = 20'
VERT. 1" = 4'

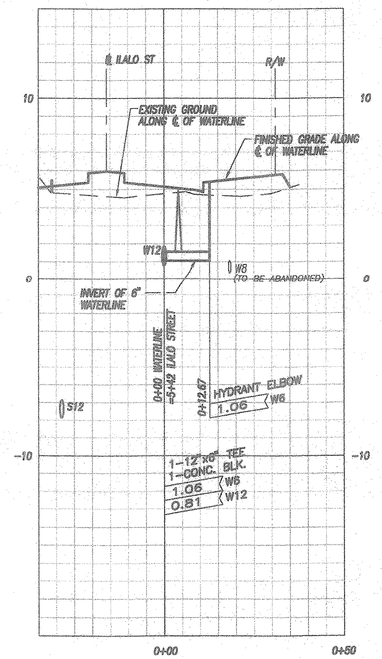

PROFILE – FH CONN.
AT 5+42 ILALO STREET

SCALE: HORIZ. 1" = 20'
VERT. 1" = 4'

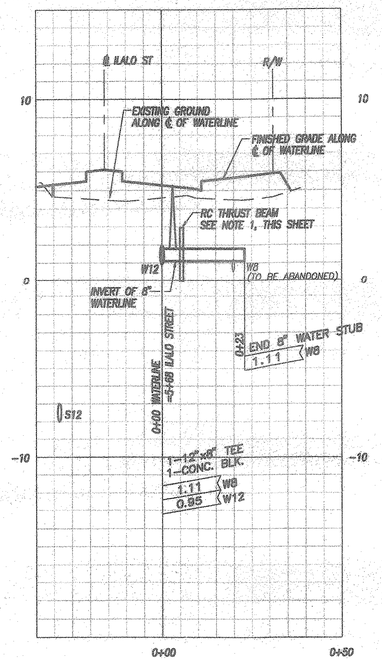

PROFILE – 8" WATERLINE
AT 5+68 ILALO STREET

SCALE: HORIZ. 1" = 20'
VERT. 1" = 4'

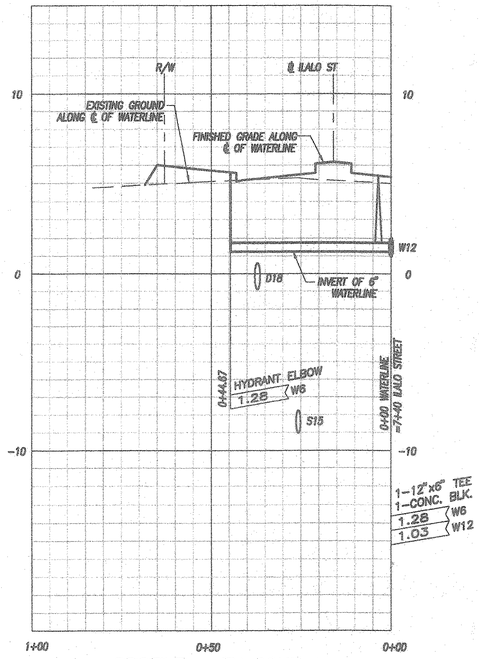

PROFILE – FH CONN.
AT 7+40 ILALO STREET

SCALE: HORIZ. 1" = 20'
VERT. 1" = 4'

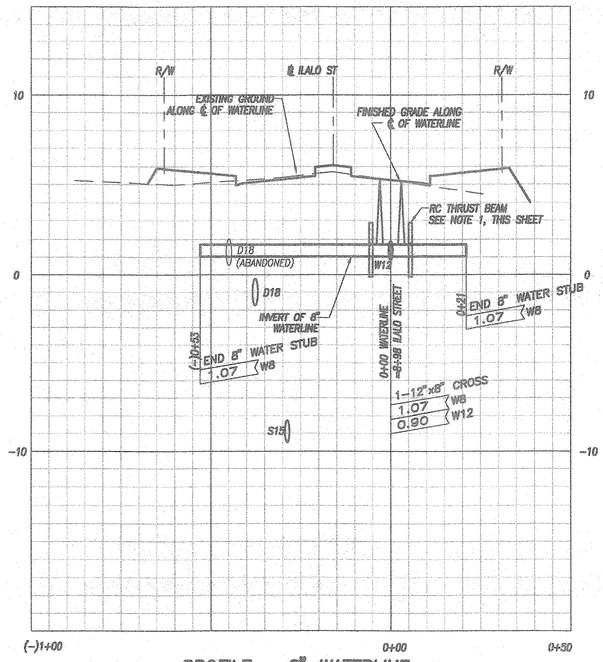

PROFILE – 8" WATERLINE
AT 8+98 ILALO STREET

SCALE: HORIZ. 1" = 20'
VERT. 1" = 4'

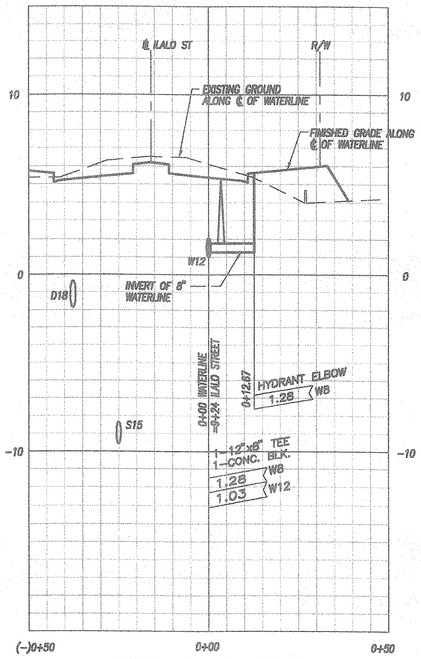

PROFILE – FH CONN.
AT 9+24 ILALO STREET

SCALE: HORIZ. 1" = 20'
VERT. 1" = 4'

PROPOSED PUBLIC ROAD

APPROVED: DATE:

Dennis M. Nishimura 7/25/00
Chief, Wastewater Branch, DPP

Catherine R. Dungca 7-14-00
for Chief, Planning & Engineering, BWS

NOTE:
1. CONTRACTOR TO SUBMIT SHOP DRAWING AND OBTAIN BWS APPROVAL FOR SIZE AND REINFORCING PRIOR TO INSTALLATION.

GRAPHIC SCALES:

1"=20' 20 0 20 40

1"=4' 4 0 4 8

SCALE IN FEET

REVISION	DATE	DESCRIPTION	MADE BY	APPROVED

Planning – Engineering – Environmental Services – Photogrammetry – Surveying – Construction Management
R. M. TOWILL CORPORATION
808 842 1133 420 Waiakamilo Road Suite 411 Honolulu Hawaii 96817-4941

GREG H. HIYAKUMOTO
LICENSED PROFESSIONAL ENGINEER
No. 8662-C
HAWAII, U.S.A.

THIS WORK WAS PREPARED BY ME OR UNDER MY SUPERVISION.

BY: R. M. TOWILL CORPORATION 7/14/00

HAWAII COMMUNITY DEVELOPMENT AUTHORITY
STATE OF HAWAII
HONOLULU, HAWAII

KAKA'AKO COMMUNITY DEVELOPMENT DISTRICT
IMPROVEMENT DISTRICT 9

ILALO STREET IMPROVEMENTS

WATERLINE PROFILES – 1

ENGINEER: HG CHECKED BY: GHH
DRAFTSMAN: NPC DATE: JULY 13, 2000

EXECUTIVE DIRECTOR, HAWAII COMMUNITY DEVELOPMENT AUTHORITY

FILE	POCKET	FOLDER	NO.

"RECORD DRAWINGS" C-19 SHEET 26 OF 140 SHEETS

waterprof1.dwg 7-14-00 9:07:09 am EST

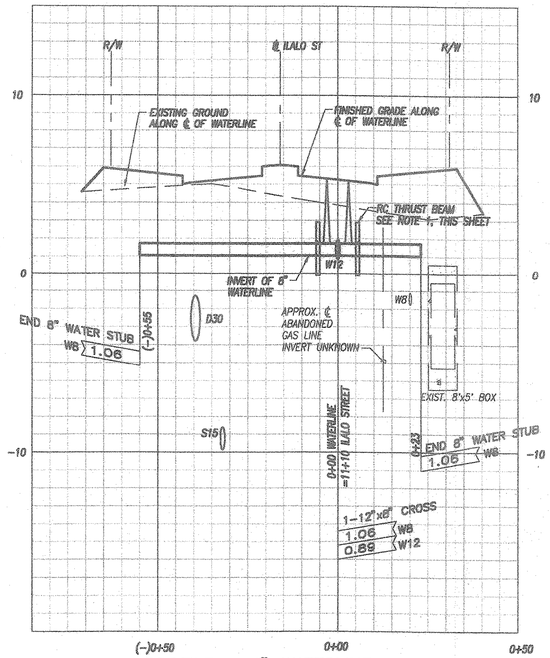

PROFILE – 8" WATERLINE AT 11+10 ILALO STREET

SCALE: HORIZ. 1" = 20'
VERT. 1" = 4'

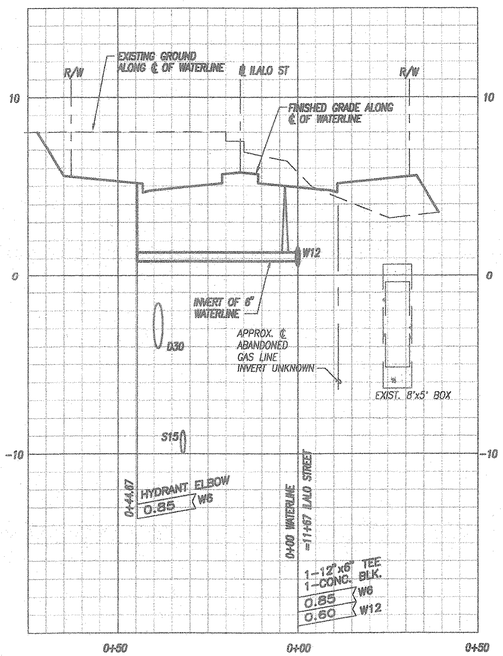

PROFILE – FH CONN. AT 11+67 ILALO STREET

SCALE: HORIZ. 1" = 20'
VERT. 1" = 4'

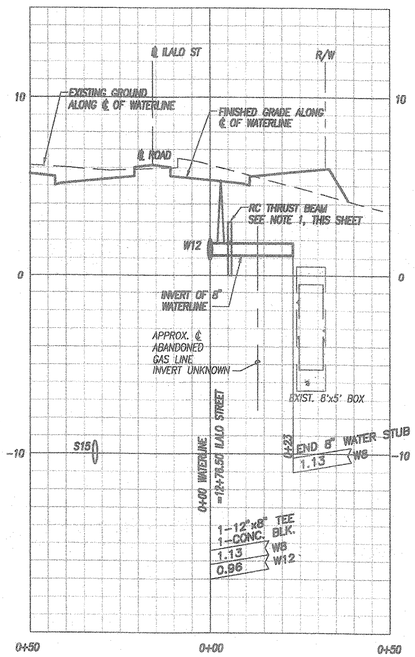

PROFILE – 8" WATERLINE AT 12+76.50 ILALO STREET

SCALE: HORIZ. 1" = 20'
VERT. 1" = 4'

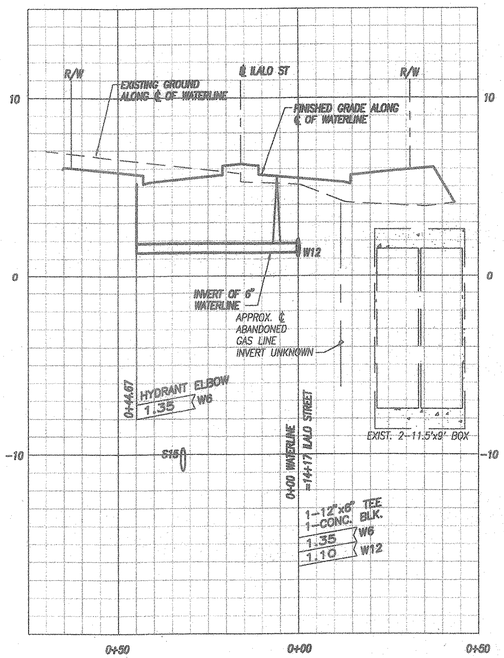

PROFILE – FH CONN. AT 14+17 ILALO STREET

SCALE: HORIZ. 1" = 20'
VERT. 1" = 4'

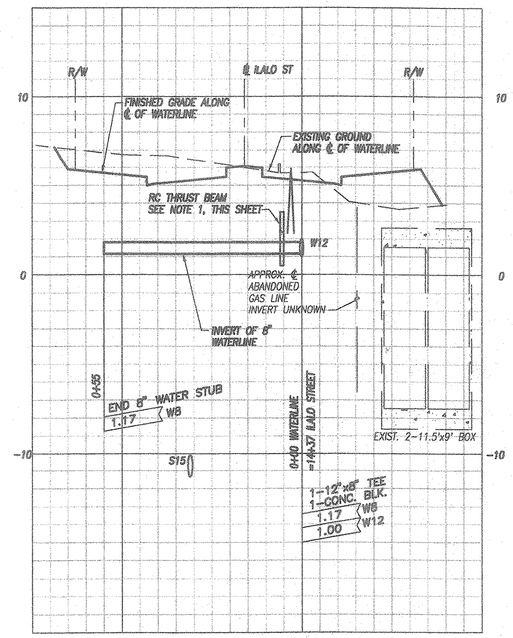

PROFILE – WATERLINE AT 14+37 ILALO STREET

SCALE: HORIZ. 1" = 20'
VERT. 1" = 4'

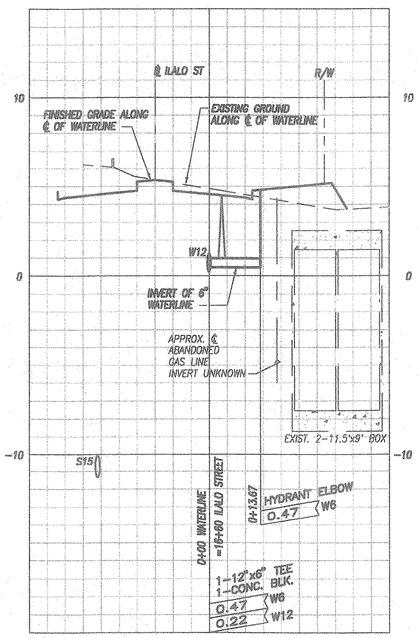

PROFILE – FH CONN. AT 15+92 ILALO STREET

SCALE: HORIZ. 1" = 20'
VERT. 1" = 4'

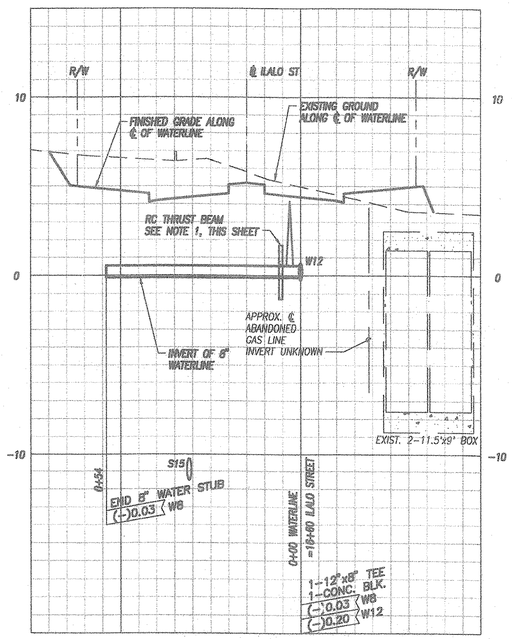

PROFILE – 8" WATERLINE AT 16+60 ILALO STREET

SCALE: HORIZ. 1" = 20'
VERT. 1" = 4'

NOTE:
1. CONTRACTOR TO SUBMIT SHOP DRAWING AND OBTAIN BWS APPROVAL FOR SIZE AND REINFORCING PRIOR TO INSTALLATION.

PROPOSED PUBLIC ROAD

APPROVED: DATE:

Dennis M. Nishimura 7/25/00
Chief, Wastewater Branch, DPP for

Catherine R. Dungca 7-14-00
for Chief, Planning & Engineering, BWS

GRAPHIC SCALES:

1"=20' 20 0 20 40
1"=4' 4 0 4 8
SCALE IN FEET

REVISION	DATE	DESCRIPTION	MADE BY	APPROVED

Planning – Engineering – Environmental Services – Photogrammetry – Surveying – Construction Management
R. M. TOWILL CORPORATION
808 842 1133 420 Waiakamilo Road Suite 411 Honolulu Hawaii 96817-4941

GREG H. HIYAKUMOTO
LICENSED PROFESSIONAL ENGINEER
No. 8662-C
HAWAII, U.S.A.

THIS WORK WAS PREPARED BY ME OR UNDER MY SUPERVISION.
BY: Greg H. Hiyakumoto 7/14/00
R.M. TOWILL CORPORATION

HAWAII COMMUNITY DEVELOPMENT AUTHORITY
STATE OF HAWAII
HONOLULU, HAWAII

KAKA'AKO COMMUNITY DEVELOPMENT DISTRICT
IMPROVEMENT DISTRICT 9
ILALO STREET IMPROVEMENTS

WATERLINE PROFILES – 2

ENGINEER: HG CHECKED BY: GHH
DRAFTSMAN: NPC DATE: JULY 13, 2000

EXECUTIVE DIRECTOR, HAWAII COMMUNITY DEVELOPMENT AUTHORITY

FILE	POCKET	FOLDER	NO.

waterprof2.dwg 7-14-00 9:09:01 am EST

"RECORD DRAWINGS" C-20 SHEET 27 OF 140 SHEETS

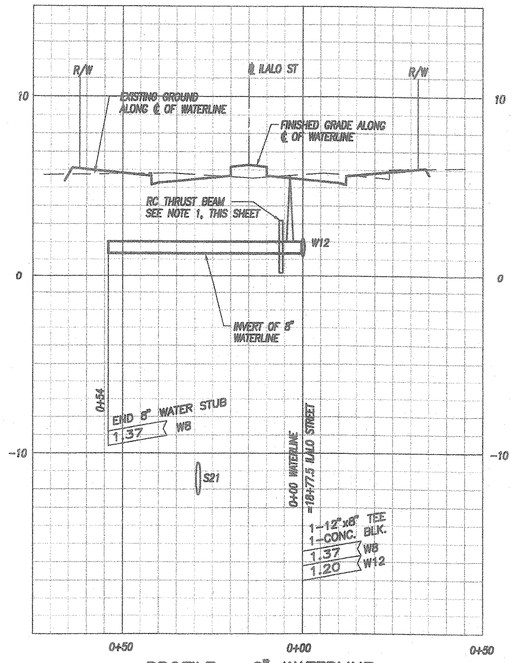

PROFILE – 8" WATERLINE
AT 18+77.50 ILALO STREET

SCALE: HORIZ. 1" = 20'
VERT. 1" = 4'

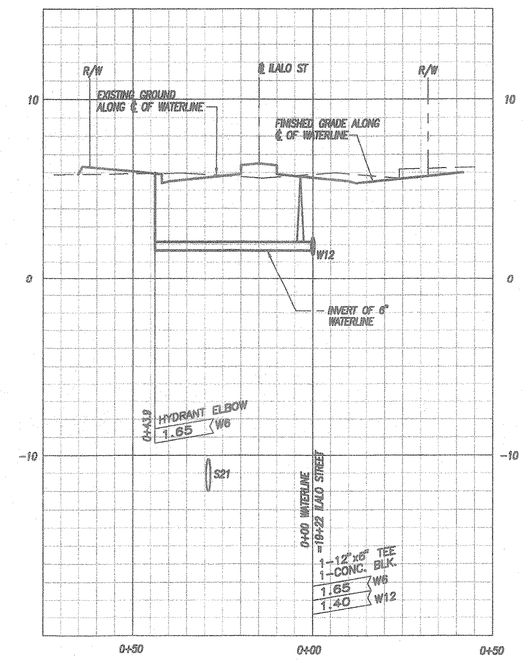

PROFILE – FH CONN.
AT 19+22 ILALO STREET

SCALE: HORIZ. 1" = 20'
VERT. 1" = 4'

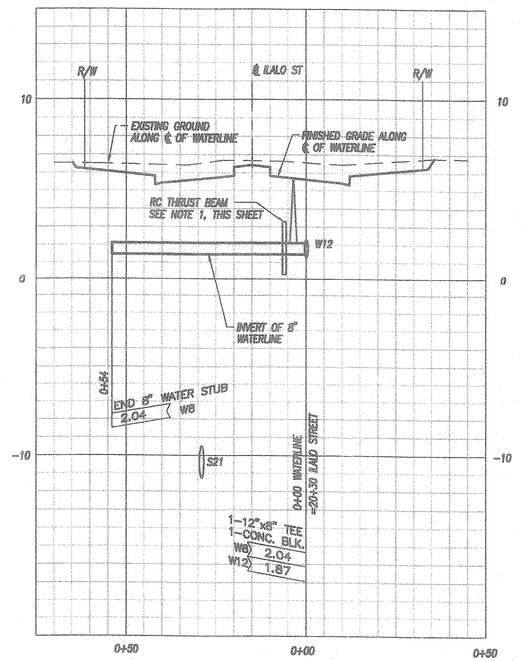

PROFILE – 8" WATERLINE
AT 20+30 ILALO STREET

SCALE: HORIZ. 1" = 20'
VERT. 1" = 4'

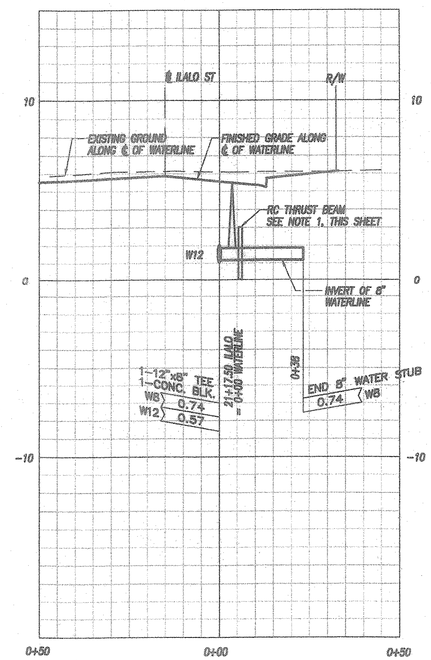

PROFILE – 8" WATERLINE
AT 21+17.50 ILALO STREET

SCALE: HORIZ. 1" = 20'
VERT. 1" = 4'

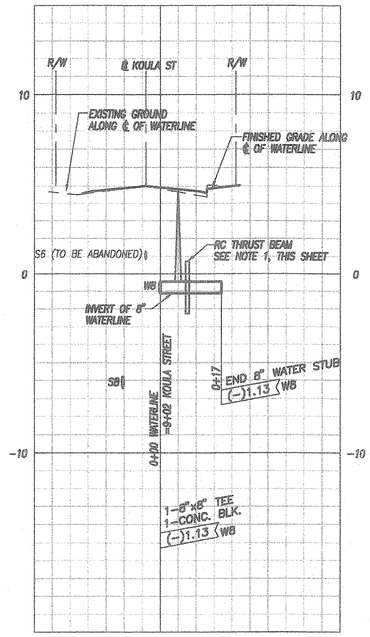

PROFILE – 8" WATERLINE
AT 9+02 KOULA STREET

SCALE: HORIZ. 1" = 20'
VERT. 1" = 4'

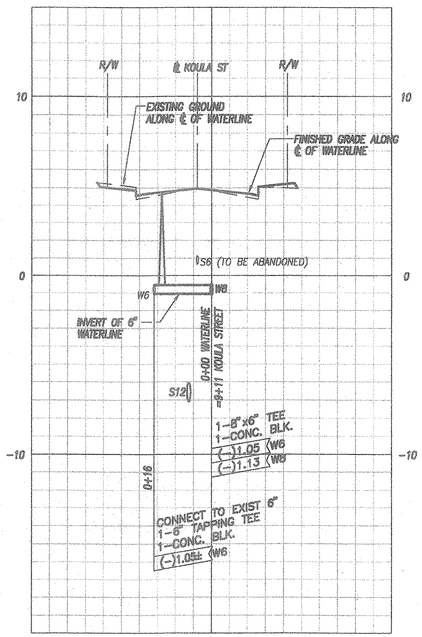

PROFILE – 6" WATERLINE
AT 9+11 KOULA STREET

SCALE: HORIZ. 1" = 20'
VERT. 1" = 4'

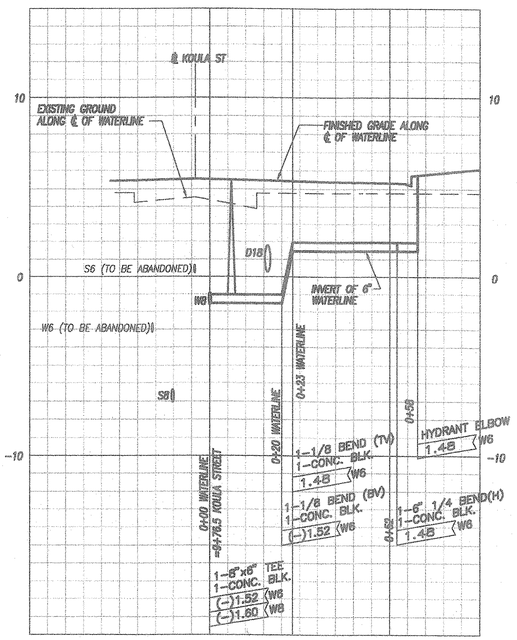

PROFILE – FH CONN.
AT 9+76.5 KOULA STREET

SCALE: HORIZ. 1" = 20'
VERT. 1" = 4'

PROPOSED PUBLIC ROAD

APPROVED: DATE:

Dennis M. Nishimura 7/25/00
Chief, Wastewater Branch, DPP HW

for Catherine R. Dungca 7-14-00
Chief, Planning & Engineering, BWS

NOTE:
1. CONTRACTOR TO SUBMIT SHOP DRAWING AND OBTAIN BWS APPROVAL FOR SIZE AND REINFORCING PRIOR TO INSTALLATION.

GRAPHIC SCALES:

1"=20' 20 0 20 40

1"=4' 4 0 4 8

SCALE IN FEET

REVISION	DATE	DESCRIPTION	MADE BY	APPROVED

Planning – Engineering – Environmental Services – Photogrammetry – Surveying – Construction Management
R. M. TOWILL CORPORATION
808 842 1133 420 Waiakamilo Road Suite 411 Honolulu Hawaii 96817-4941

GREG H. HIYAKUMOTO
LICENSED PROFESSIONAL ENGINEER
No. 6662-C
HAWAII, U.S.A.

THIS WORK WAS PREPARED BY ME OR UNDER MY SUPERVISION.

BY: [signature] 7/14/00
R.M. TOWILL CORPORATION

HAWAII COMMUNITY DEVELOPMENT AUTHORITY
STATE OF HAWAII
HONOLULU, HAWAII
KAKA'AKO COMMUNITY DEVELOPMENT DISTRICT
IMPROVEMENT DISTRICT 9
ILALO STREET IMPROVEMENTS

WATERLINE PROFILES – 3

ENGINEER: HG CHECKED BY: GHH
DRAFTSMAN: NPC DATE: JULY 13, 2000

EXECUTIVE DIRECTOR, HAWAII COMMUNITY DEVELOPMENT AUTHORITY

FILE	POCKET	FOLDER	NO.

waterprof3.dwg 7-14-00 9:10:18 am EST

"RECORD DRAWINGS"

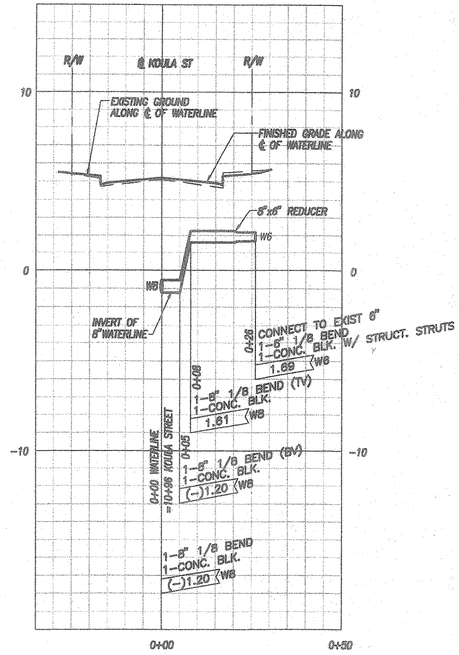

PROFILE – 6" WATERLINE
AT 10+96 KOULA STREET

SCALE: HORIZ. 1" = 20'
VERT. 1" = 4'

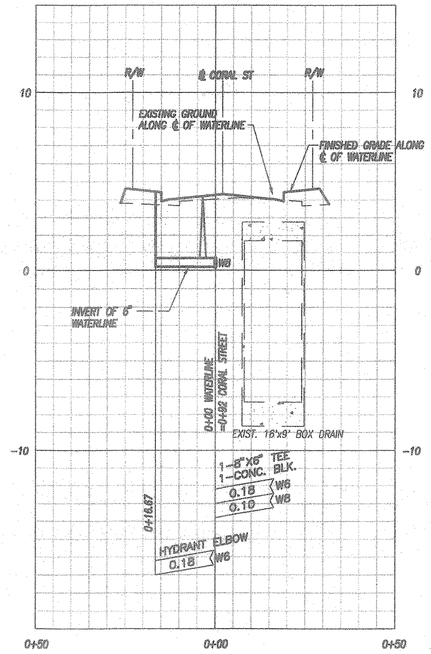

PROFILE – FH CONN.
AT 0+92 CORAL STREET

SCALE: HORIZ. 1" = 20'
VERT. 1" = 4'

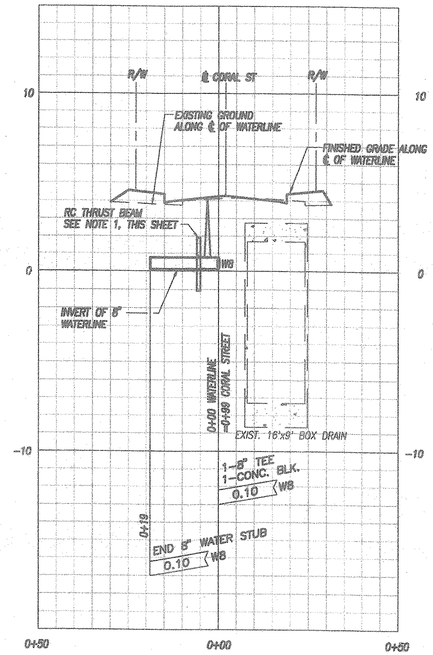

PROFILE – 8" WATERLINE
AT 0+99 CORAL STREET

SCALE: HORIZ. 1" = 20'
VERT. 1" = 4'

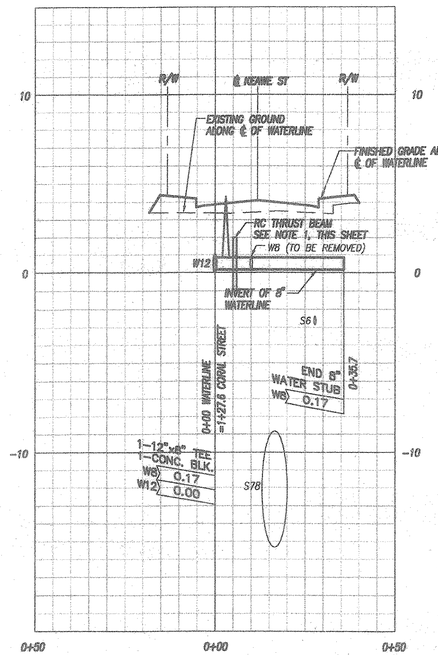

PROFILE – 8" WATERLINE
AT 1+27.6 KEAWE STREET

SCALE: HORIZ. 1" = 20'
VERT. 1" = 4'

NOTE:
1. CONTRACTOR TO SUBMIT SHOP DRAWING AND OBTAIN BWS APPROVAL FOR SIZE AND REINFORCING PRIOR TO INSTALLATION.

PROPOSED PUBLIC ROAD

APPROVED: DATE:

Dennis M. Nishimura 7/25/00
Chief, Wastewater Branch, DPP

for Catherine R. Brunges 7-14-00
Chief, Planning & Engineering, BWS

REVISION	DATE	DESCRIPTION	MADE BY	APPROVED

Planning – Engineering – Environmental Services – Photogrammetry – Surveying – Construction Management
R. M. TOWILL CORPORATION
808 842 1133 420 Waiakamilo Road Suite 411 Honolulu Hawaii 96817-4941

GRAPHIC SCALES:

1"=20' 20 0 20 40

1"=4' 4 0 4 8

SCALE IN FEET

GREG H. MIYAKUMOTO
LICENSED PROFESSIONAL ENGINEER
No. 6662-C
HAWAII, U.S.A.

THIS WORK WAS PREPARED BY ME OR UNDER MY SUPERVISION.

BY: [signature] 7/14/00
R.M. TOWILL CORPORATION

HAWAII COMMUNITY DEVELOPMENT AUTHORITY
STATE OF HAWAII
HONOLULU, HAWAII
KAKA'AKO COMMUNITY DEVELOPMENT DISTRICT
IMPROVEMENT DISTRICT 9
LALO STREET IMPROVEMENTS

WATERLINE PROFILES – 4

ENGINEER: HG CHECKED BY: GHH
DRAFTSMAN: NPC DATE: JULY 13, 2000

[signature]
EXECUTIVE DIRECTOR, HAWAII COMMUNITY DEVELOPMENT AUTHORITY

FILE	POCKET	FOLDER	NO.

waterprof4.dwg 7-14-00 9:11:06 am EST

"RECORD DRAWINGS" C-22 SHEET 29 OF 140 SHEETS

AHUI STREET

KOULA STREET

ILALO STREET

OHE STREET

COOKE STREET

WARD AVENUE EXTENSION

KAKA'AKO COMMUNITY DEVELOPMENT DISTRICT IMPROVEMENT DISTRICT 9 ILALO STREET IMPROVEMENTS

IMPROVEMENT DISTRICT 6 WARD AVENUE EXTENSION (BY OTHERS)

KAKA'AKO GATEWAY PARK

TRUE NORTH SCALE: 1" = 40'

STA. 11+00

STA. 14+00

STA. 18+50

MATCH LINE (SEE ABOVE RIGHT)

MATCH LINE (SEE BELOW LEFT)

STOP
R1-1 30"x30"
4-WAY
R1-3 12"x6"

R1-1 30"x30"
ALL WAY
R1-4 18"x6"

SPEED LIMIT 25
R2-1(25)
24" x 30"

2 HR PARKING 7:00 AM TO 6:00 PM EXCEPT SUNDAYS AND HOLIDAYS
R7-108
12" x 18"

R3-4
24" x 24"

ONE WAY
R6-1(R)
36" x 12"

R3-4
24" x 24"
2-2 BACK TO BACK

(RELOCATED)

INSTALL NEW "STOP" WORD

12" WIDE WHITE STOP BAR

INSTALL NEW PAVT. WORD & STOP BAR

4" WIDE YELLOW EDGE LINE 2' OFFSET FROM MEDIAN W/ TYPE "H" RPM's @ 20' O.C.

4" DOUBLE YELLOW LINE 40' LONG W/ TYPE "D" RPM's AT 20' O.C.

4" WIDE YELLOW LINE W/ TYPE "H" RPM's @ 5' O.C. AROUND THE NOSE

RELOCATED STREET NAME SIGN

RELOCATE EXISTING STREET NAME SIGN

RELOCATE EXISTING STOP SIGN

REMOVE EXIST. PAVT. WORDS (1) AND STRIPING INSTALL NEW PAVT. WORDS AND STRIPING AS SHOWN

REMOVE EXIST. PAVT. WORDS (3) AND STRIPING INSTALL NEW PAVT. WORDS AND STRIPING AS SHOWN

REMOVE & SALVAGE RETURN TO CITY

STREET NAME SIGN

CROSSWALK, TYP.

4" WIDE YELLOW LINE W/ TYPE "H" RPM's @ 5' O.C. AROUND MEDIAN NOSE SEE (12) C-23 C-25 TYP.

RELOCATE HONDA SIGN SEE SHEET P-2

STALL MARKINGS (TYP.) SEE (14) C-23 C-25

PARKING METER STD. (TYP.) SEE (13) C-23 C-25 TYP.

GRASSWALK, TYP.

3 STALLS @ 22'

4 STALLS @ 22'

2 STALLS @ 22'

6 STALLS @ 22'

5 STALLS @ 22'

4 STALLS @ 22'

18'

22'

20'

28'

24'

STATE DEPARTMENT OF AGRICULTURE

"QUARANTINE STATION" SIGN (RELOCATED)

"PARKING LOT" SIGN (RELOCATED)

PRODUCE CENTER

CORAL STREET

KEAWE STREET

R1-1 30"x30" (RELOCATED)

R3-4 24" x 24"

R2-1(25) 24" x 30"

R7-108 12" x 18"

SIGNING AND STRIPING PLAN -1

SCALE: 1" = 40'

GRAPHIC SCALES:

1"=40'

40 0 40 80

NOTES:

1. CROSSWALK STRIPING AND STRIPING AROUND THE MEDIAN NOSE TO BE ELIMINATED FOR BID ADDITIVE ALTERNATE #1. (SEE LANDSCAPING PLANS)
2. THE CONTRACTOR SHALL CONTACT THE HONOLULU POLICE DEPARTMENT, PARKING METER SECTION AT 527-3932 AT LEAST THREE (3) WORKING DAYS PRIOR TO ANY PARKING METER WORK.
3. THE TRAFFIC DIVISION, DEPARTMENT OF TRANSPORTATION SERVICES, WILL NEED TO PUBLISH LEGAL NOTICE FOR TIME LIMIT PARKING. THE CONTRACTOR SHALL COORDINATE WITH THE TRAFFIC DIVISION AND PROVIDE THEM WITH ONE (1) SET OF AS-BUILT PLANS.
4. MEDIAN LANDSCAPING TO BE MAINTAINED BY HCDA.
5. MEDIAN PLANTINGS SHALL BE MAINTAINED AT A HEIGHT NO GREATER THAN 30 INCHES FOR VEHICULAR SIGHT DISTANCE.

APPROVED: DATE: 8/31/00

Chief, Traffic Review Branch, DPP

REVISION	DATE	DESCRIPTION	MADE BY	APPROVED
4	7/9/01	ADDED 10' LANDSC. STRIP ALONG ILALO STREET & DEL. DRIVEWAY AT STA. 13+71.6	LSY	
3	7/9/01	ADDED 10' WIDE LANDSCAPE STRIP ALONG ILALO STREET	LSY	
2	1/5/01	ADDED GWY AT STAS. 7+79, REVISED STREET PARKING AND TREE LAYOUT	LSY	

Planning - Engineering - Environmental Studies - Photogrammetry - Surveying - Construction Management

R. M. TOWILL CORPORATION

600 842 1133 420 Waiakamilo Road Suite 411 Honolulu Hawaii 96817-4941

GREG H. HIYAKUMOTO LICENSED PROFESSIONAL ENGINEER No. 8862-C HAWAII, U.S.A.

THIS WORK WAS PREPARED BY ME OR UNDER MY SUPERVISION.

BY: R.M. TOWILL CORPORATION

HAWAII COMMUNITY DEVELOPMENT AUTHORITY
STATE OF HAWAII
HONOLULU, HAWAII

KAKA'AKO COMMUNITY DEVELOPMENT DISTRICT
IMPROVEMENT DISTRICT 9

ILALO STREET IMPROVEMENTS

SIGNING AND STRIPING PLAN - 1

ENGINEER: LSY CHECKED BY: GHH

DRAFTSMAN: BEY DATE: JULY 26, 2000

EXECUTIVE DIRECTOR, HAWAII COMMUNITY DEVELOPMENT AUTHORITY

FILE	POCKET	FOLDER	NO.

"RECORD DRAWINGS"

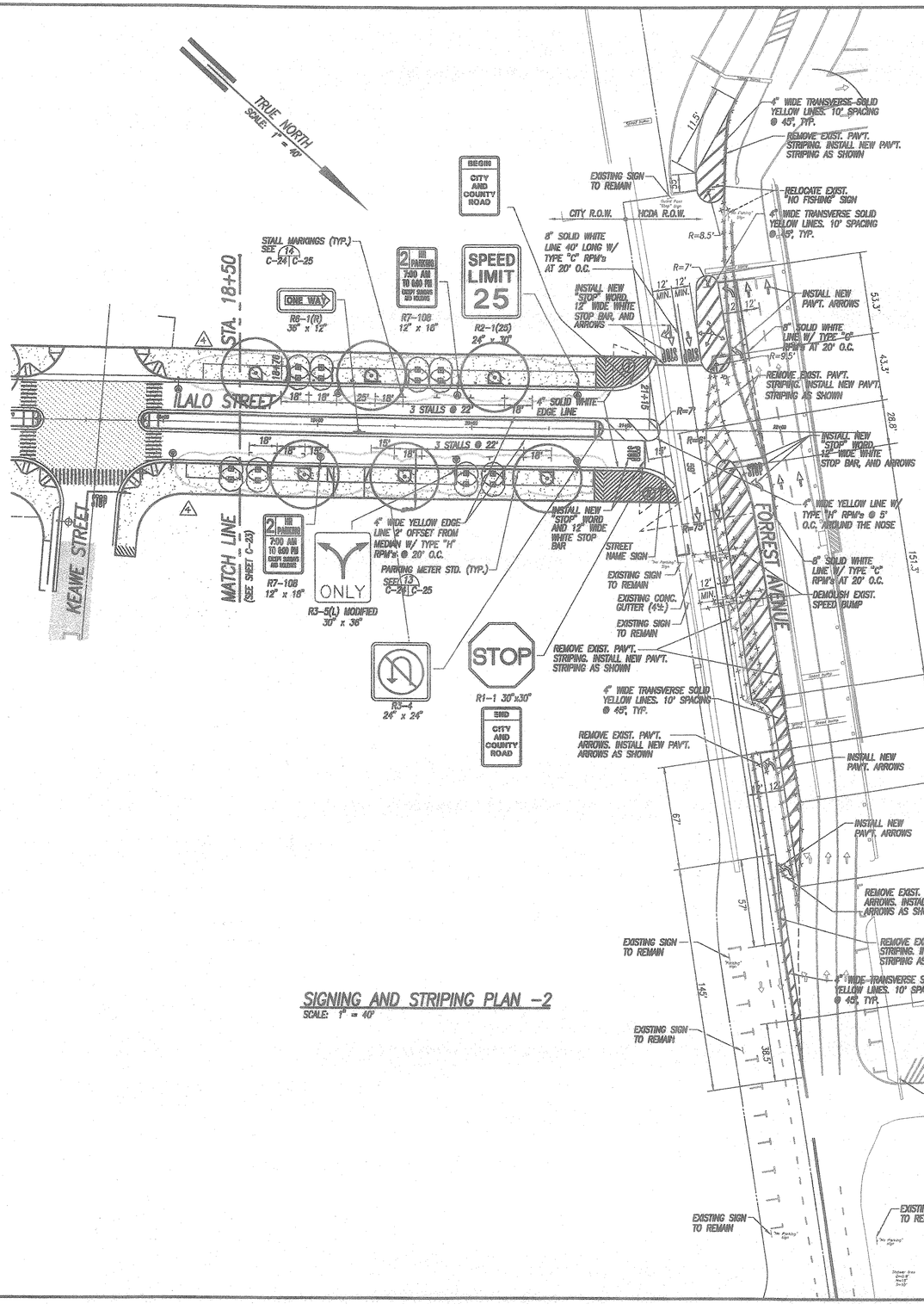

SIGNING AND STRIPING PLAN -2
SCALE: 1" = 40'

GRAPHIC SCALES:
1"=40' 40 0 40 80

APPROVED: DATE: 8/8/00
Chief, Traffic Review Branch, DPP
(For construction within City R.O.W. only)

REVISION	DATE	DESCRIPTION	MADE BY	APPROVED
1	7/9/01	ADDED 10' WIDE LANDSCAPE STRIP ALONG ILALO ST.	LSY	TYPE / DATE

R. M. TOWILL CORPORATION
Planning – Engineering – Environmental Services – Photogrammetry – Surveying – Construction Management
808 842 1133 420 Waiakamilo Road Suite 411 Honolulu Hawaii 96817-4941

GREG H. HIYAKUMOTO LICENSED PROFESSIONAL ENGINEER No. 6662-C HAWAII, U.S.A.

THIS WORK WAS PREPARED BY ME OR UNDER MY SUPERVISION.
BY: R. M. TOWILL CORPORATION

HAWAII COMMUNITY DEVELOPMENT AUTHORITY
STATE OF HAWAII
HONOLULU, HAWAII
KAKA'AKO COMMUNITY DEVELOPMENT DISTRICT
IMPROVEMENT DISTRICT 9
ILALO STREET IMPROVEMENTS

SIGNING AND STRIPING PLAN – 2

ENGINEER: LSY CHECKED BY: GHH
DRAFTSMAN: BN DATE: JULY 26, 2000
EXECUTIVE DIRECTOR, HAWAII COMMUNITY DEVELOPMENT AUTHORITY

FILE	POCKET	FOLDER	NO.

"RECORD DRAWINGS" C-24 SHEET 31 OF 140 SHEETS

SIGN2.dwg 7-26-00 2:23:19 pm EST

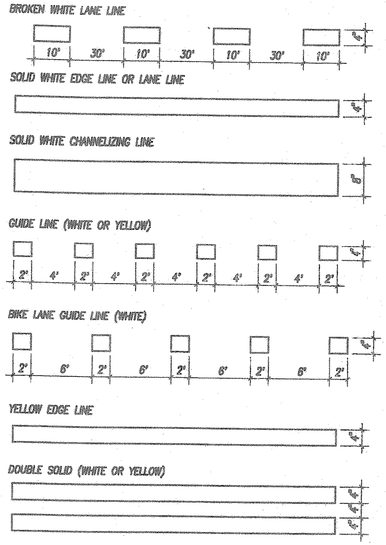

1 TYPES OF LONGITUDINAL LINES
C-23, C-24 | C-25 & C-25 NOT TO SCALE

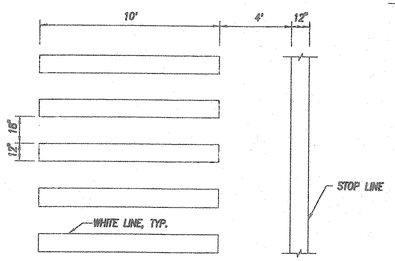

2 TYPICAL CROSSWALK
C-23 & C-24 | C-25 NOT TO SCALE

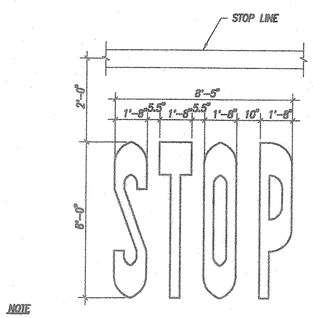

NOTE
WHEN THIS MARKING IS USED, IT SHALL BE PLACED IN EACH LANE OF TRAFFIC APPROACHING THE INTERSECTION

3 STANDARD DETAIL OF THE WORD "STOP" — 8'-0" SIZE
C-23, C-24 | C-25 & C-25 NOT TO SCALE

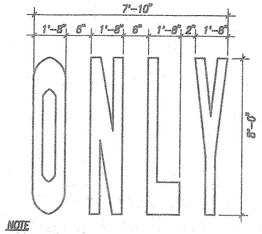

NOTE
WHEN THIS MARKING IS USED, IT SHALL BE PLACED IN EACH LANE OF TRAFFIC APPROACHING THE INTERSECTION

4 STANDARD DETAIL OF THE WORD "ONLY" — 8'-0" SIZE
C-23, C-24 | C-25 & C-25 NOT TO SCALE

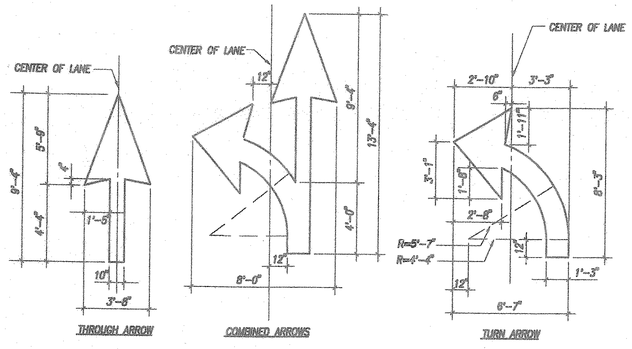

5 STANDARD PAVEMENT MARKINGS
C-23, C-24 | C-25 & C-25 NOT TO SCALE

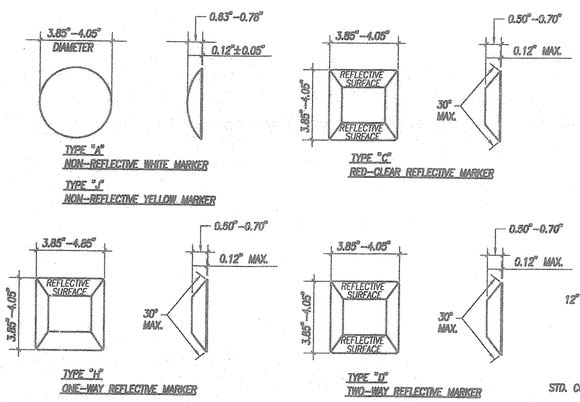

6 STANDARD RAISED PAVEMENT MARKINGS
C-23, C-24 | C-25 & C-25 NOT TO SCALE

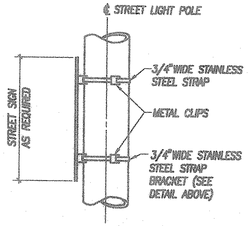

7 STRAP MOUNTING DETAIL
C-25 | C-25 NOT TO SCALE

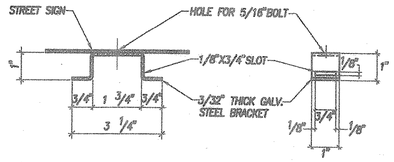

8 BRACKET DETAIL
C-25 | C-25 NOT TO SCALE

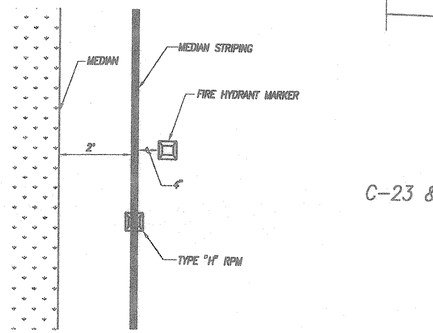

9 FIRE HYDRANT MARKER LOCATION
VARIOUS | C-25 NOT TO SCALE

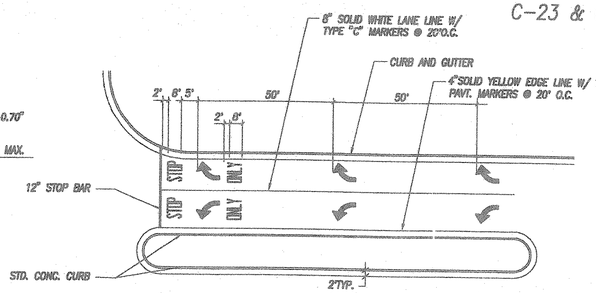

10 PAVEMENT MARKINGS AT TURN LANE
C-23 & C-24 | C-25 NOT TO SCALE

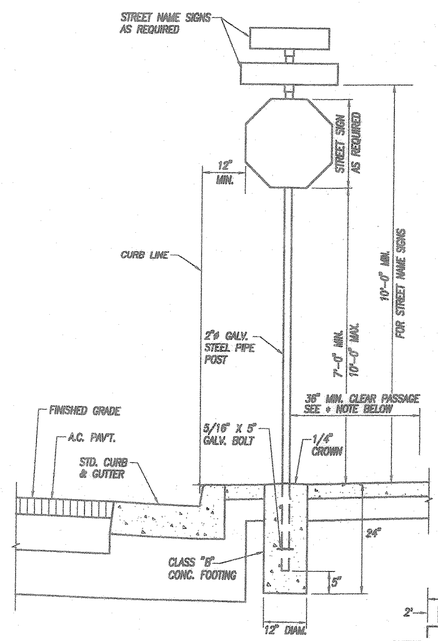

* NOTE: ALL SIGN INSTALLATIONS MUST MEET LATERAL & HEIGHT CLEARANCES, INCLUDING NEW SIGNS THAT WILL BE POSTED OR TO EXIST. SIGN POSTS. EXTEND, RELOCATE OR REPLACE AS REQUIRED TO MEET CLEARANCE REQUIREMENTS.

11 SIGN POST DETAIL
C-23 & C-24 | C-25 NOT TO SCALE

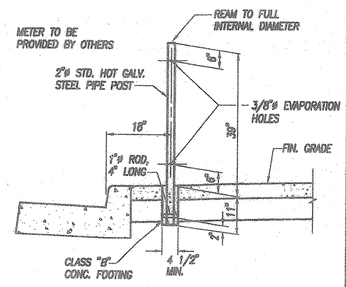

NOTE: STANDARD SHALL BE PAINTED ONE COAT WITH ALUMINUM INDUSTRIAL PAINT

13 METER STANDARD DETAIL
C-23 & C-24 | C-25 NOT TO SCALE

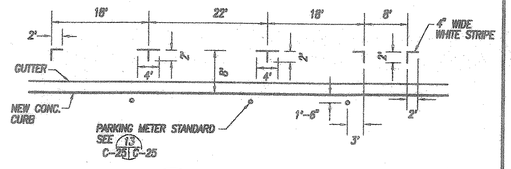

14 TYPICAL STALL MARKING
C-23 & C-24 | C-25 NOT TO SCALE

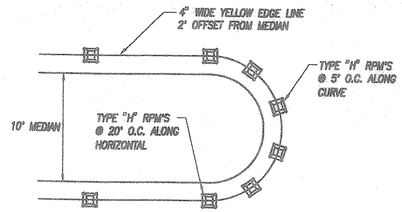

12 MEDIAN NOSE STRIPPING
C-23 & C-24 | C-25 NOT TO SCALE

APPROVED: DATE: 6/16/00
Chief, Traffic Review Branch, DPP

REVISION	DATE	DESCRIPTION	MADE BY	APPROVED

Planning – Engineering – Environmental Services – Photogrammetry – Surveying – Construction Management
R. M. TOWILL CORPORATION
808 842 1133 420 Waiakamilo Road Suite 411 Honolulu Hawaii 96817-4941

GREG H. HIYAKUMOTO LICENSED PROFESSIONAL ENGINEER No. 6662-C HAWAII, U.S.A.

THIS WORK WAS PREPARED BY ME OR UNDER MY SUPERVISION.
BY: R. M. TOWILL CORPORATION 4/24/00

HAWAII COMMUNITY DEVELOPMENT AUTHORITY
STATE OF HAWAII
HONOLULU, HAWAII

KAKA'AKO COMMUNITY DEVELOPMENT DISTRICT
IMPROVEMENT DISTRICT 9
ILALO STREET IMPROVEMENTS

SIGNING AND STRIPING DETAILS

ENGINEER: HA CHECKED BY: GH
DRAFTSMAN: HA DATE: JULY 26, 2000

EXECUTIVE DIRECTOR, HAWAII COMMUNITY DEVELOPMENT AUTHORITY

FILE	FOLDER	FOLDER	NO.

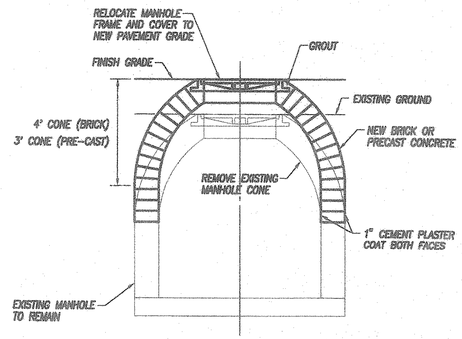

1 ADJUSTMENT OF TYPE B OR C MANHOLE FRAME AND COVER (RAISING GREATER THAN 3")

VARIOUS C-26 — NOT TO SCALE

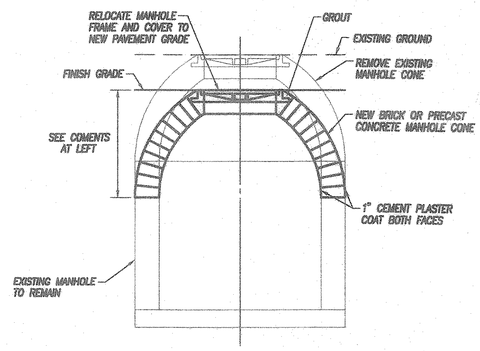

2 ADJUSTMENT OF TYPE B OR C MANHOLE FRAME AND COVER (LOWERING GREATER THAN 3")

VARIOUS C-26 — NOT TO SCALE

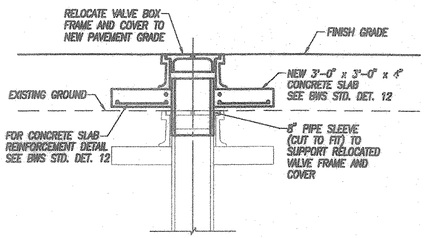

3 ADJUSTMENT OF VALVE BOXES (RAISING)

VARIOUS C-26 — NOT TO SCALE

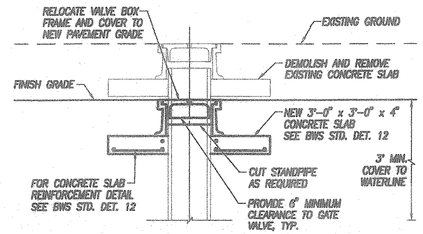

4 ADJUSTMENT OF VALVE BOXES (LOWERING)

VARIOUS C-26 — NOT TO SCALE

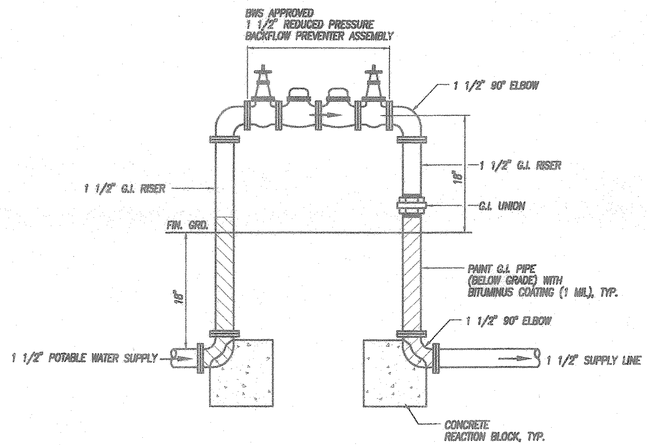

5 REDUCED PRESSURE BACKFLOW PREVENTER

VARIOUS C-26 — NOT TO SCALE

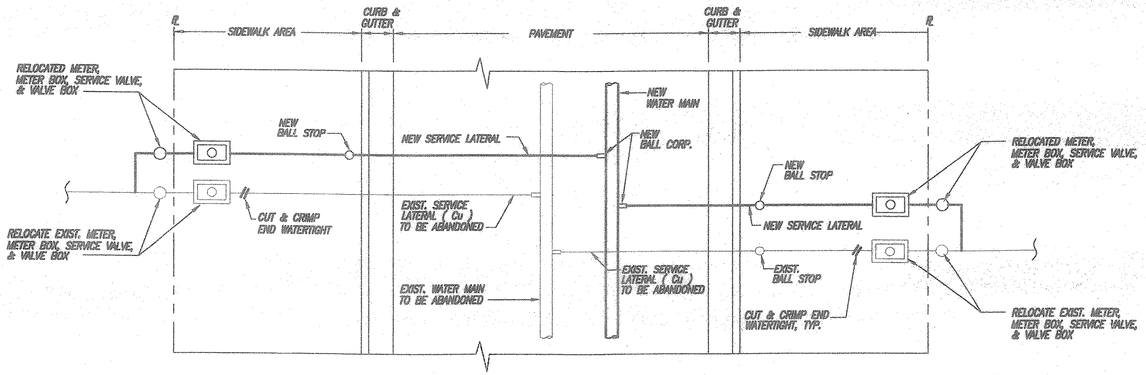

PLAN

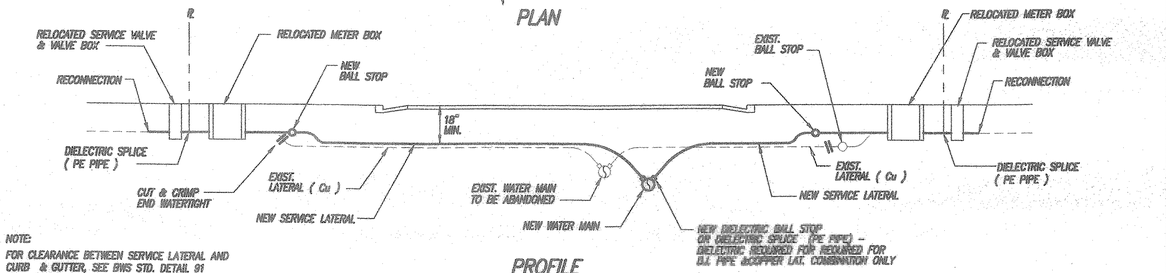

PROFILE

NOTE:
FOR CLEARANCE BETWEEN SERVICE LATERAL AND CURB & GUTTER, SEE BWS STD. DETAIL 91 (FOR COPPER SERVICE LATERAL) OR STD. DETAIL 96 (FOR PLASTIC SERVICE LATERAL)

6 SERVICE LATERAL RECONNECTION DETAIL

VARIOUS C-26 — NOT TO SCALE

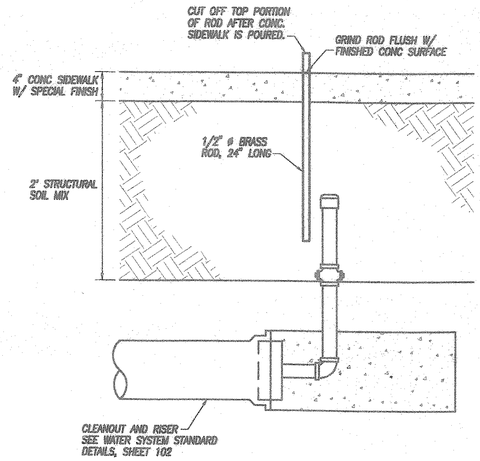

7 BRASS MARKER

VARIOUS C-26 — NOT TO SCALE

Approved:

for Chief, Planning & Engineering, BWS — Catherine R. Pongca — 7-14-00 Date

REVISION	DATE	DESCRIPTION	MADE BY	APPROVED

Planning – Engineering – Environmental Services – Photogrammetry – Surveying – Construction Management
R. M. TOWILL CORPORATION
808 842 1133 420 Waiakamilo Road Suite 411 Honolulu Hawaii 96817-4941

GREG H. HIYAKUMOTO LICENSED PROFESSIONAL ENGINEER No. 6662-C HAWAII, U.S.A.

THIS WORK WAS PREPARED BY ME OR UNDER MY SUPERVISION.

BY: R. M. TOWILL CORPORATION

HAWAII COMMUNITY DEVELOPMENT AUTHORITY
STATE OF HAWAII
HONOLULU, HAWAII

KAKA'AKO COMMUNITY DEVELOPMENT DISTRICT
IMPROVEMENT DISTRICT 9
ILALO STREET IMPROVEMENTS

WATER DETAILS

ENGINEER: HA — CHECKED BY: GH
DRAFTSMAN: HA — DATE: JULY 13, 2000

EXECUTIVE DIRECTOR, HAWAII COMMUNITY DEVELOPMENT AUTHORITY

FILE	POCKET	FOLDER	NO.

water.dwg 7-14-00 9:12:33 am EST

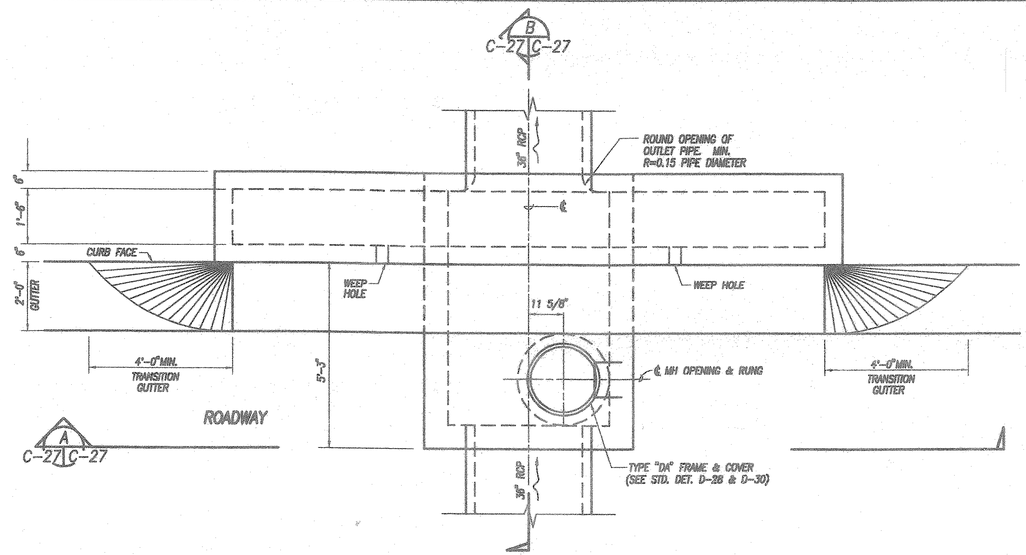

1 PLAN – CB 7
C-11 C-27

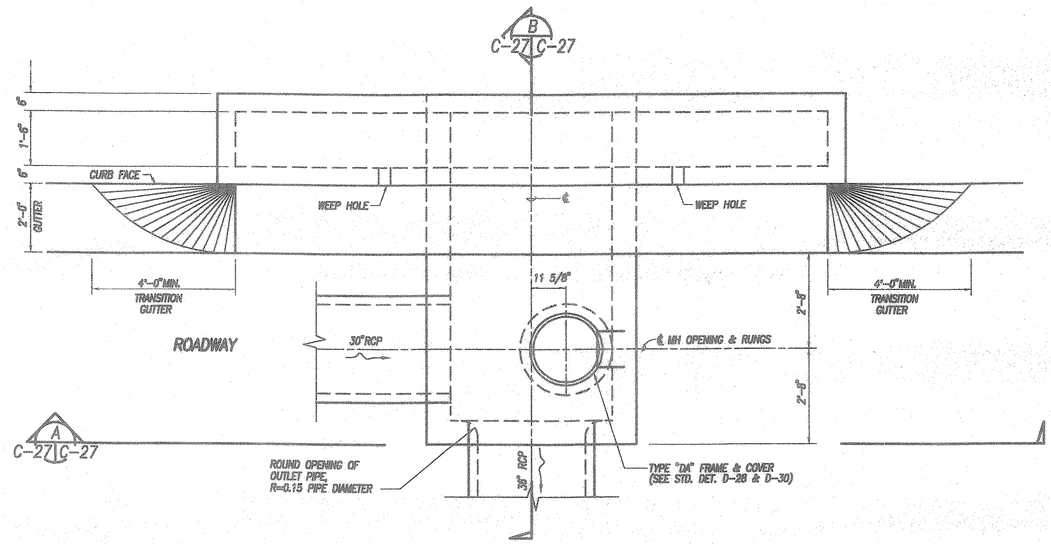

2 PLAN – CB 8
C-11 C-27

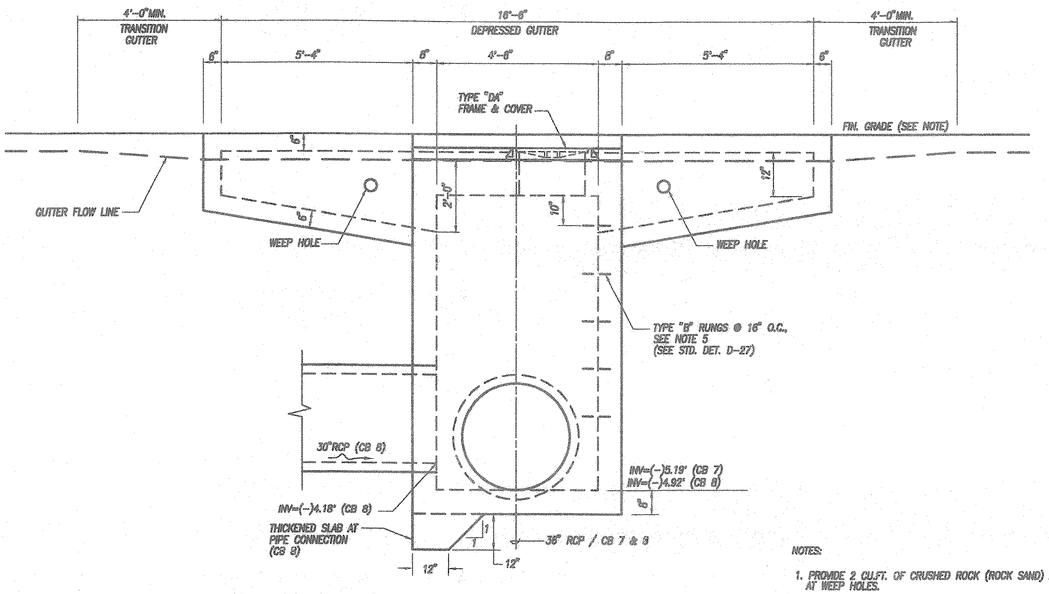

A SECTION
C-27 C-27

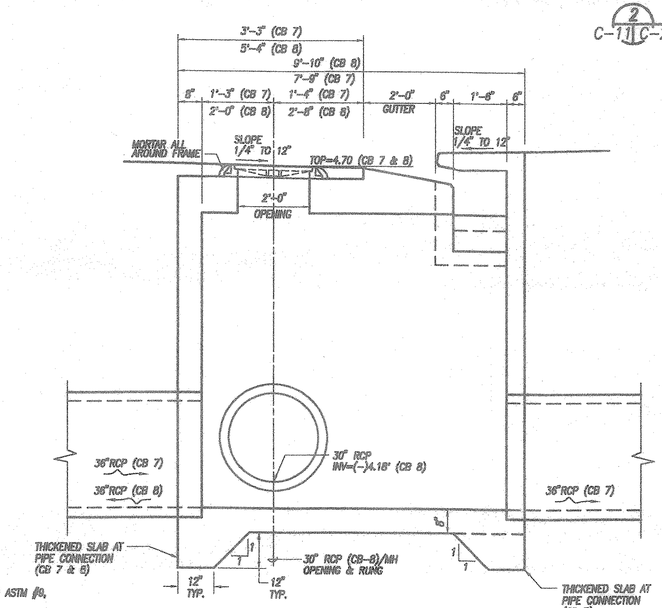

B SECTION
C-27 C-27

NOTES:

1. PROVIDE 2 CU.FT. OF CRUSHED ROCK (ROCK SAND) ASTM #8, AT WEEP HOLES.
2. FOR REINFORCEMENT SEE STRUCTURAL DRAWINGS.
3. FOR FIN. GRADE ELEVATIONS SEE CIVIL PLAN SHT. C-11.
4. SEE ADDITIONAL DETAIL ON C&C STD. DET. D-13, DETAIL "A" & "B".
5. RUNGS SHALL NOT BE INSTALLED OVER A PIPE CONNECTION AND THE LOWEST RUNG SHALL BE NOT MORE THAN 2'-0" ABOVE THE INVERT.

TYPE F SPECIAL CB 7 & 8

SCALE: 1/2" = 1'-0"

Approved:

M. [signature]
Chief, Civil Engineering Branch, DPP MT

7/18/00
Date

REVISION	DATE	DESCRIPTION	MADE BY	APPROVED

Planning – Engineering – Environmental Services – Photogrammetry – Surveying – Construction Management
R. M. TOWILL CORPORATION
808 842 1133 420 Waiakamilo Road Suite 411 Honolulu Hawaii 96817-4941

GREG H. HIYAKUMOTO LICENSED PROFESSIONAL ENGINEER No. 6652-C HAWAII, U.S.A.

THIS WORK WAS PREPARED BY ME OR UNDER MY SUPERVISION.

BY: [signature] 7/18/00
R. M. TOWILL CORPORATION

HAWAII COMMUNITY DEVELOPMENT AUTHORITY
STATE OF HAWAII
HONOLULU, HAWAII

KAKA'AKO COMMUNITY DEVELOPMENT DISTRICT
IMPROVEMENT DISTRICT 9
ILALO STREET IMPROVEMENTS

DRAINAGE DETAILS-1

ENGINEER: LY
DRAFTSMAN: NPC
CHECKED BY: GHH
DATE: JULY 13, 2000

[signature]
EXECUTIVE DIRECTOR, HAWAII COMMUNITY DEVELOPMENT AUTHORITY

FILE	POCKET	FOLDER	NO.

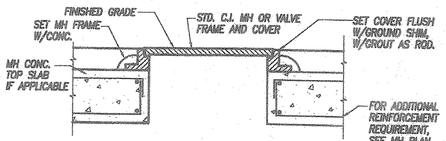

1 STANDARD MANHOLE OR VALVE FRAME & COVER SETTING DETAIL
VARIOUS | C-28 NOT TO SCALE

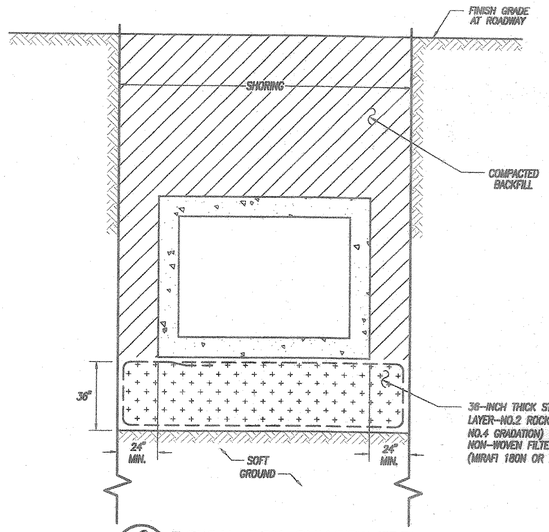

2 TYPICAL BOX CULVERT TRENCH
VARIOUS | C-28 NOT TO SCALE

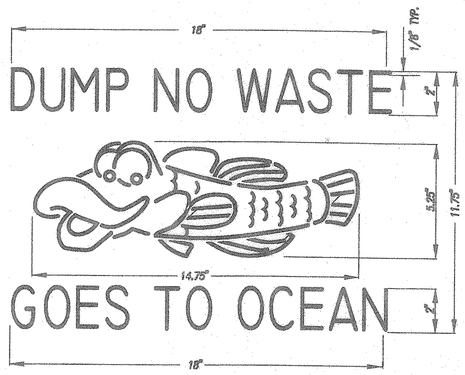

SPECIFICATIONS

MATERIAL:	ALUMINUM ALLOY (CAST ALUMINUM), LEAD, OR EQUAL.
LETTERING:	HEIGHT OF LETTERS SHALL BE 2" HIGH AND 1/8" WIDE. THE UNDER SIDE OF ALL LETTERING SHALL BE V-SHAPED.
LINE WORK:	ALL LINE WORK FOR THE FISH DIAGRAM SHALL BE 1/8" THICK. THE UNDER SIDE OF THE LINE WORK SHALL BE V-SHAPED.
PLACEMENT:	THE STENCIL SHALL BE CENTERED ON THE TOP DECK OF THE CATCH BASIN AND SHALL BE A MINIMUM OF 8" AWAY FROM THE FRONT FACE OF THE INLET.
IMPRESSION:	THE STENCIL SHALL BE PRESSED 1/4" INTO THE GREEN CONCRETE WHEN THE INLET IS MADE.

3 CATCH BASIN STENCIL DETAIL
VARIOUS | C-28 NOT TO SCALE

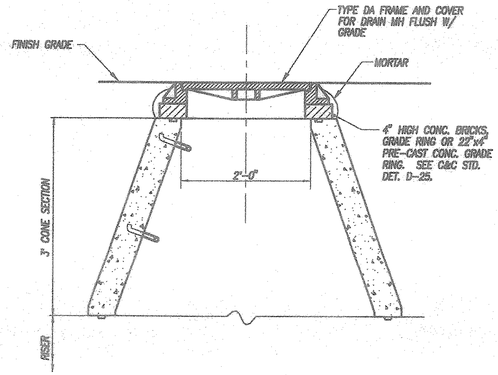

4 TYP. PRECAST CONC. MANHOLE GRADE RING RISER DETAIL FOR NEW DRAIN MANHOLES IN PAVED ROADS
VARIOUS | C-28 NOT TO SCALE

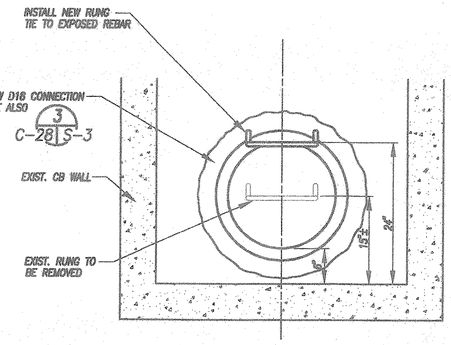

5 NEW D18 CONNECTION TO EXIST. CATCH BASIN
C-16 | C-28 SCALE: 1" = 1'-0"

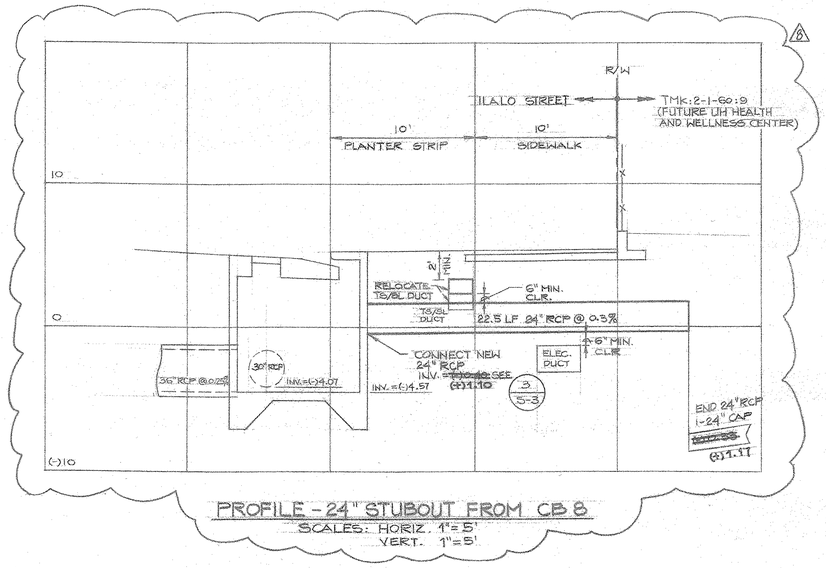

PROFILE - 24" STUBOUT FROM CB 8
SCALES: HORIZ. 1"=5'
VERT. 1"=5'

REVISION	DATE	DESCRIPTION	MADE BY	APPROVED
6	9/6/02	ADDED 24"D PROFILE	LAY	WTF 9/5/02 CHK DATE

Planning – Engineering – Environmental Services – Photogrammetry – Surveying – Construction Management
R. M. TOWILL CORPORATION
808 842 1133 420 Waiakamilo Road Suite 411 Honolulu Hawaii 96817-4941

Approved:

M. Takiguchi 7/18/00
Chief, Civil Engineering Branch, DPP WTF Date

GREG H. HIYAKUMOTO LICENSED PROFESSIONAL ENGINEER No. 6662-C HAWAII, U.S.A.

THIS WORK WAS PREPARED BY ME OR UNDER MY SUPERVISION.
BY: 7/14/00
R.M. TOWILL CORPORATION

HAWAII COMMUNITY DEVELOPMENT AUTHORITY
STATE OF HAWAII
HONOLULU, HAWAII
KAKA'AKO COMMUNITY DEVELOPMENT DISTRICT
IMPROVEMENT DISTRICT 9
ILALO STREET IMPROVEMENTS

DRAINAGE DETAILS-2

ENGINEER: HA CHECKED BY: GH
DRAFTSMAN: HA DATE: JULY 13, 2000

EXECUTIVE DIRECTOR, HAWAII COMMUNITY DEVELOPMENT AUTHORITY

DRAINAGE.dwg 7-14-00 9:15:20 am EST

"RECORD DRAWINGS" C-28 SHEET 35 OF 140 SHEETS

FILE	POCKET	FOLDER	NO.

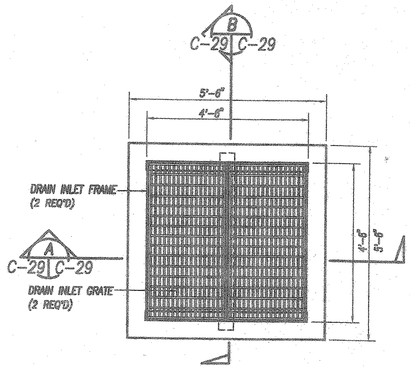

PLAN
SCALE: 1/2" = 1'-0"

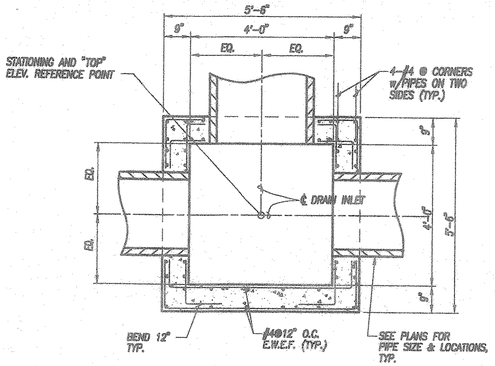

D
C-29 C-29 SECTION
SCALE: 1/2" = 1'-0"

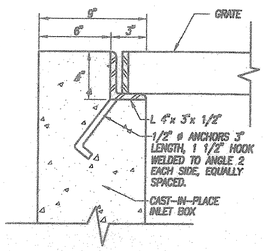

GRATING SEAT
SCALE: 1" = 0.5'

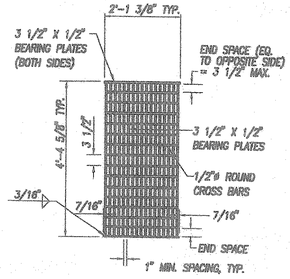

GRATE DETAIL
SCALE: 1/2" = 1'

GRATE NOTES

1. CONTRACTOR HAS THE OPTION OF USING CAST NODULAR IRON CAST STL., WELDED, BOLTED, OR CAST END BLOCK.
2. GRATES AND FRAMES SHALL BE GALVANIZED, HEAVY FOR TRAFFIC BEARING AND BICYCLE SAFE.
3. ROUNDED TOP EDGE OF BARS OPTIONAL ON ALL GRATES.
4. PIPE DROP INLETS WITH A GRATE SHALL BE PLACED SO THAT BARS PARALLEL DIRECTION OF PRINCIPAL SURFACE FLOW.

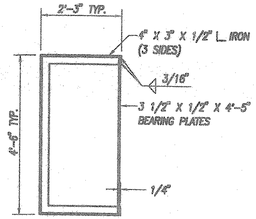

FRAME DETAIL
SCALE: 1/2" = 1'

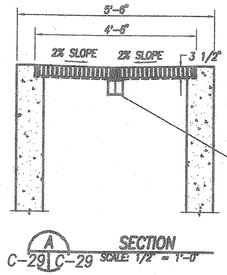

A
C-29 C-29 SECTION
SCALE: 1/2" = 1'-0"

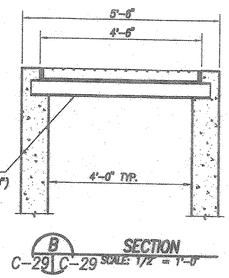

B
C-29 C-29 SECTION
SCALE: 1/2" = 1'-0"

INLET BOX GENERAL NOTES

1. REINFORCING STEEL IN WALLS SHALL BE #4 BARS @ 12" O.C. 2" CLEAR TO INSIDE OF BOX UNLESS OTHERWISE SHOWN.
2. PLACE ADDITIONAL #4 HOR. BARS ACROSS THE LENGTH OF THE OPENING AND BEND BACK 4" INTO THE INLET WALL ON EACH SIDE.
3. BASIN FLOOR SHALL HAVE WOOD TROWEL FINISH AND A MINIMUM SLOPE 12:1 FROM ALL DIRECTIONS TOWARDS OUTLET PIPE.
4. ROUND OPENING OF OUTLET PIPE. MINIMUM RADIUS = 0.15 PIPE DIAMETER.
5. FULL PENETRATION BUTT WELDS MAY BE SUBSTITUTED FOR THE FILLET WELDS ON ALL ANCHORS.
6. CAST-IN-PLACE OR PRECAST ALTERNATIVE OPTION WITH CONTRACTOR.
7. STRUCTURAL DRAWINGS SHALL GOVERN DIMENSIONS AND REINFORCING. SEE C C-29 C-29 & D C-29 C-29

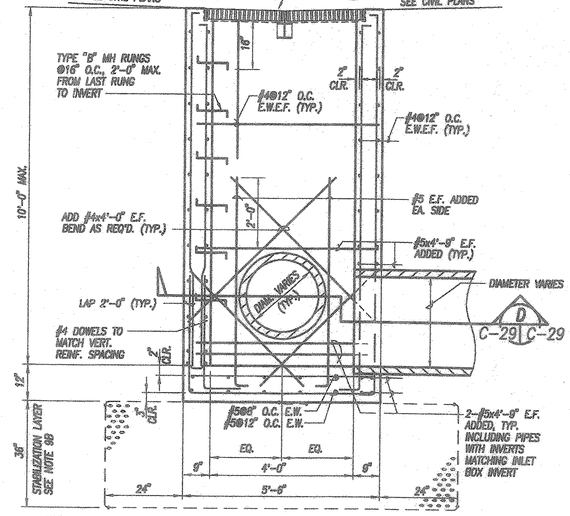

NOTE:
FOR PIPE INVERTS AND CONFIGURATION, SEE PLAN & PROFILE SHTS.

C
C-29 C-29 TYPICAL SECTION
SCALE: 1/2" = 1'-0"

1
VARIOUS C-29 DRAIN INLET
SCALE: 1/2" = 1'-0"

2
C-29 C-29 DRAIN INLET FRAME & GRATE DETAIL
SCALE: AS SHOWN

GENERAL NOTES

1. THE CONTRACTOR SHALL VERIFY ALL DIMENSIONS AND LOCATIONS OF DUCTS AND PIPES BEFORE POURING CONCRETE. COORDINATE INFORMATION SHOWN BEFORE COMMENCEMENT OF WORK.
2. ALL CONCRETE SHALL HAVE A MINIMUM 28 DAY COMPRESSIVE STRENGTH OF 3,000 P.S.I.
3. REINFORCING STEEL SHALL BE DEFORMED BARS CONFORMING TO A.S.T.M. A615 GRADE 60.
4. FOR STRUCTURAL STEEL NOTES, SEE SHEET S-1.
5. UNLESS OTHERWISE NOTED, ALL CONTINUOUS BARS IN WALLS AND SLABS SHALL BE LAPPED 40 BAR DIAMETERS AT ALL SPLICES, CORNERS, AND INTERSECTIONS. SPLICES BETWEEN ADJACENT BARS SHALL BE STAGGERED 4'-0" APART.
6. EXCEPT AS OTHERWISE NOTED, ALL RUNGS AND OTHER TYPICAL ENGINEERING DETAILS SHALL BE REFERRED TO THE CITY & COUNTY OF HONOLULU STANDARDS.
7. MINIMUM CONCRETE COVER OVER REINFORCING STEEL SHALL BE AS FOLLOWS:
   CONCRETE CAST AGAINST EARTH . . . . . 3"
   CONCRETE EXPOSED TO EARTH OR WEATHER
   PRIMARY REINF. . . . . 2"
   STIRRUPS AND TIES . . . . . 1-1/2"
8. REFER TO CIVIL DRAWINGS FOR THE LOCATION OF DRAIN INLETS AND OTHER DETAILS.
9. DESIGN LIVE LOADS:
   ROADWAY HS20
   SURCHARGE . . . . . 240 PSF
10. FOUNDATION NOTES:
    A. EXCEPT AS OTHERWISE NOTED THE FOLLOWING CRITERIA WAS USED IN THE DESIGN OF FOUNDATION:
       ALLOWABLE SOIL BEARING CAPACITY. . . . . 2500 PSF
    B. THE BOTTOM SLAB SHALL BEAR ON A MINIMUM 36-INCH THICK STABILIZATION LAYER CONSISTING OF NO. 2 ROCK (ASTM C 33, NO. 4 GRADATION) WRAPPED IN A GEOTEXTILE FILTER FABRIC (MIRAFI 180N OR EQUIVALENT) BELOW THE MANHOLE STRUCTURE. THE EDGES OF THE STABILIZATION LAYER SHALL EXTEND A MINIMUM OF 24 INCHES BEYOND THE SIDES OF THE MANHOLE BASE.

Approved:

Chief, Civil Engineering Branch, DPP

7/18/00
Date

REVISION	DATE	DESCRIPTION	MADE BY	APPROVED

Planning - Engineering - Environmental Services - Photogrammetry - Surveying - Construction Management
R. M. TOWILL CORPORATION
808 842 1133 420 Waiakamilo Road Suite 411 Honolulu Hawaii 96817-4941

GREG H. HIYAKUMOTO
LICENSED PROFESSIONAL ENGINEER
No. 6682-C
HAWAII, U.S.A.

THIS WORK WAS PREPARED BY ME OR UNDER MY SUPERVISION.

BY: R.M. TOWILL CORPORATION

HAWAII COMMUNITY DEVELOPMENT AUTHORITY
STATE OF HAWAII
HONOLULU, HAWAII

KAKA'AKO COMMUNITY DEVELOPMENT DISTRICT
IMPROVEMENT DISTRICT 9
LALO STREET IMPROVEMENTS

DRAINAGE DETAILS-3

ENGINEER: HA
DRAFTSMAN: HA
CHECKED BY: GH
DATE: JULY 13, 2000

EXECUTIVE DIRECTOR, HAWAII COMMUNITY DEVELOPMENT AUTHORITY

FILE	POCKET	FOLDER	NO.

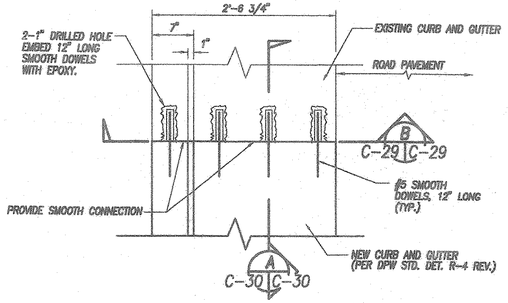

PLAN VIEW
SCALE: 1" = 1'-0"

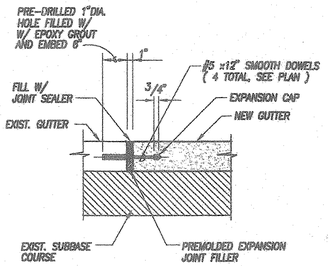

A C-30 C-30 SECTION
SCALE: 1" = 1'-0"

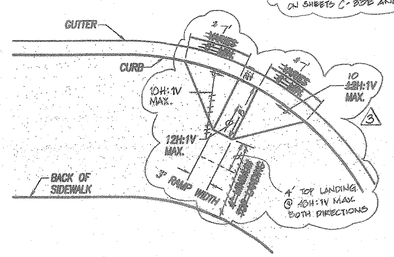

NOTES:

1. A MINIMUM 3'-0" WIDE ACCESSIBLE ROUTE WITH A CROSS SLOPE OF 2% SHALL BE MAINTAINED ALONG THE ENTIRE LENGTH OF SIDEWALK AND AT THE BACK OF DRIVEWAY RAMPS, UNOBSTRUCTED BY LIGHT POLES, SIGNS, ETC.
2. ALL CURB RAMPS WITH A 4'-0" MINIMUM TOP LANDING SHALL NOT EXCEED A MAXIMUM RATIO OF 12H:1V.
3. ALL CURB RAMPS WITHOUT A TOP LANDING SHALL BE 5' WIDE AND SHALL NOT EXCEED A MAXIMUM RATIO OF 1/4" / FT.
4. ALL CURB RAMP FLARES SHALL NOT EXCEED A MAXIMUM RATIO OF 10H:1V.

2 CURB RAMP WITH TOP LANDING FOR TYPICAL 6" DROP
VARIOUS C-30
SCALE: 1" = 10'

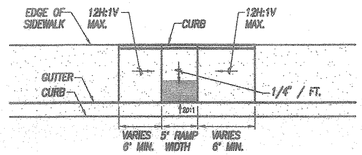

3 CURB RAMP WITHOUT TOP LANDING
VARIOUS C-30
SCALE: 1" = 10'

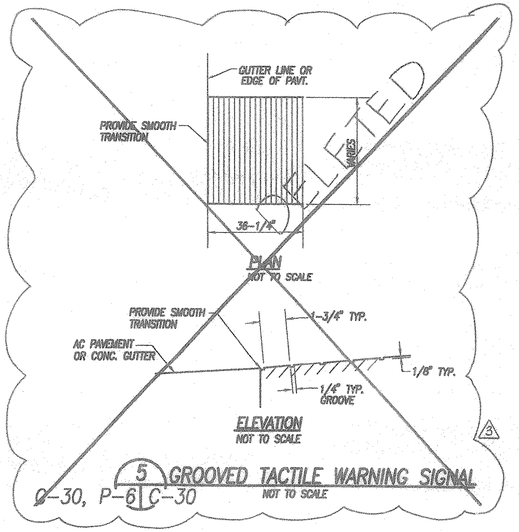

5 GROOVED TACTILE WARNING SIGNAL
C-30, P-6 C-30
NOT TO SCALE

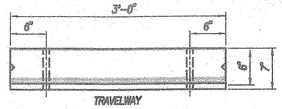

PLAN

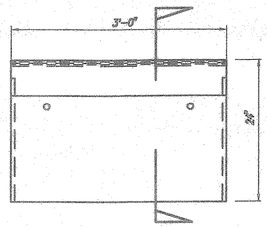

ELEVATION

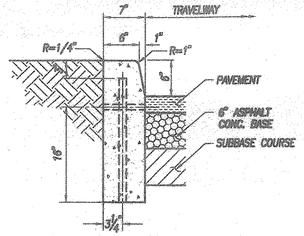

SECTION

9 6" MODIFIED CONCRETE CURB DETAIL
C-8 C-30
NOT TO SCALE

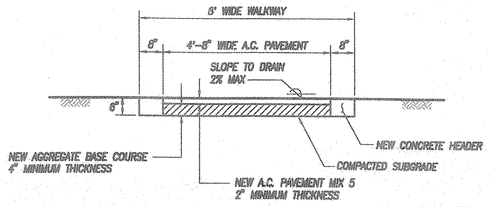

6 SECTION - A.C. WALKWAY
C-11, C-16 C-30
SCALE: 1/2" = 1'

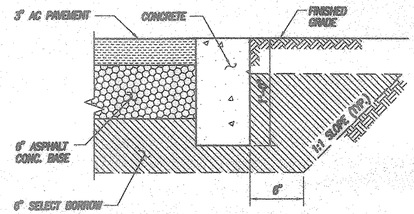

10 CONCRETE HEADER
C-18 C-30
SCALE: 1-1/2" = 1'

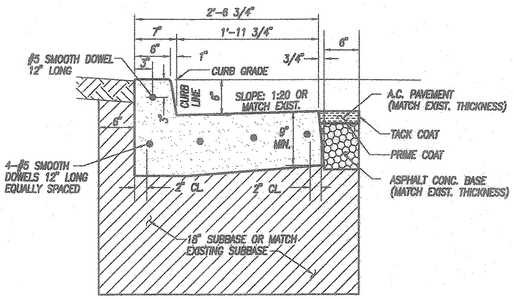

B C-30 C-30 SECTION
SCALE: 1" = 1'-0"

TYPICAL RESTORATION OF EXIST. CURB & GUTTER (CITY) CONNECTION
VARIOUS C-30
SCALE: AS SHOWN

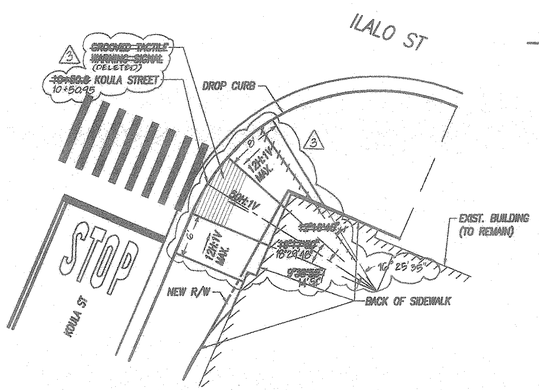

TYPE E CURB RAMP (MODIFIED) AT NORTHWEST CORNER OF KOULA ST INTERSECTION
C-14 C-30
SCALE: 1" = 10'

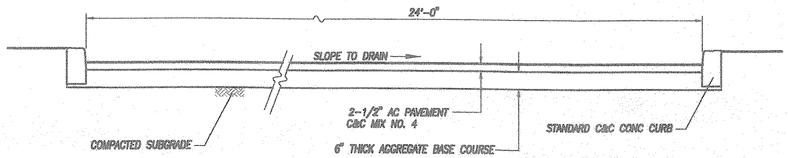

7 SECTION - DRIVEWAY "A"
C-11, C-16 C-30
SCALE: 1/2" = 1'

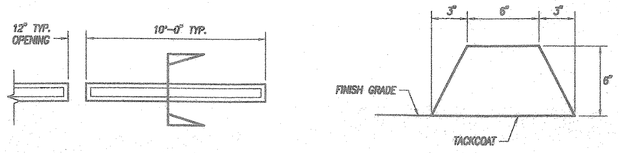

PLAN VIEW
SCALE: 1" = 4'-0"

SECTION
SCALE: 1" = 2'-0"

8 TEMPORARY A.C. CURB
VARIOUS C-30
SCALE AS SHOWN

Approved:

Chief, Civil Engineering Branch, DPP WCT — Date 7/12/01

REVISION	DATE	DESCRIPTION	MADE BY	APPROVED
2	4/11/01	REVISED CURB RAMP DETAILS	VGY	5/15/01 WCT CEB WCT

Planning – Engineering – Environmental Services – Photogrammetry – Surveying – Construction Management
R. M. TOWILL CORPORATION
808 842 1133 420 Waiakamilo Road Suite 411 Honolulu Hawaii 96817-4941

GREG H. HIYAKUMOTO LICENSED PROFESSIONAL ENGINEER No. 8662-C HAWAII, U.S.A.

THIS WORK WAS PREPARED BY ME OR UNDER MY SUPERVISION.

BY: R. M. TOWILL CORPORATION

HAWAII COMMUNITY DEVELOPMENT AUTHORITY
STATE OF HAWAII
HONOLULU, HAWAII
KAKA'AKO COMMUNITY DEVELOPMENT DISTRICT
IMPROVEMENT DISTRICT 9
ILALO STREET IMPROVEMENTS

ROADWAY DETAILS-1

ENGINEER: HA — CHECKED BY: GH
DRAFTSMAN: HA — DATE: JULY 13, 2000

EXECUTIVE DIRECTOR, HAWAII COMMUNITY DEVELOPMENT AUTHORITY

FILE	POCKET	FOLDER	NO.

ROADWAY.dwg 7-14-00 9:19:24 am EST

"RECORD DRAWINGS" C-30 SHEET 37 OF 140 SHEETS

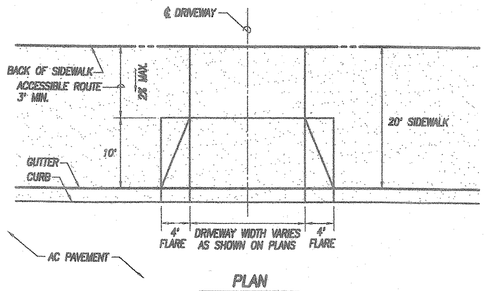

PLAN

SCALE: 1/2" = 1'-0"

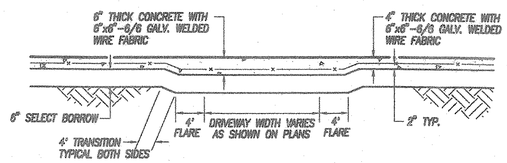

ELEVATION

NOT TO SCALE

1 TYPICAL MODIFIED DRIVEWAY ALONG ILALO STREET

VARIOUS | C-31

SCALE: AS SHOWN

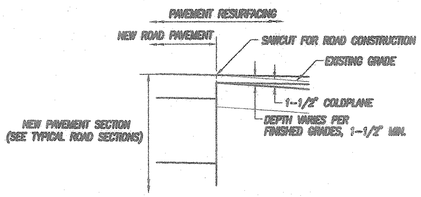

4 CONNECTION OF NEW ROAD PAVEMENT TO RESURFACED PAVEMENT

VARIOUS | C-31

NOT TO SCALE

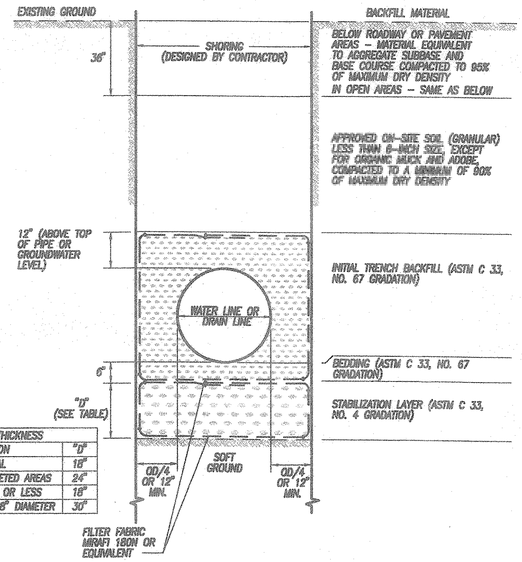

STABILIZATION LAYER THICKNESS		
UTILITY LINE	LOCATION	"D"
WATER LINES	TYPICAL	18"
	CONCRETE JACKETED AREAS	24"
DRAIN LINES	18" DIAMETER OR LESS	18"
	GREATER THAN 18" DIAMETER	30"

7 TYPICAL TRENCH DETAIL FOR WATER & DRAIN LINES

VARIOUS | C-31

NOT TO SCALE

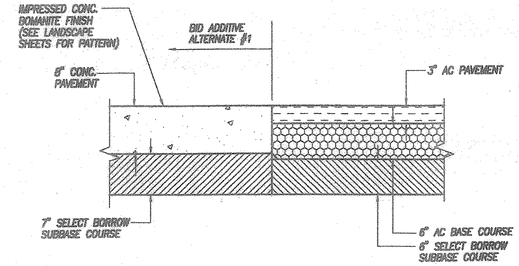

(BID ADDITIVE ALTERNATE #1) 9 PAVEMENT CONNECTION/PRISM TRANSITION

VARIOUS | C-31

SCALE: 1" = 1'-0"

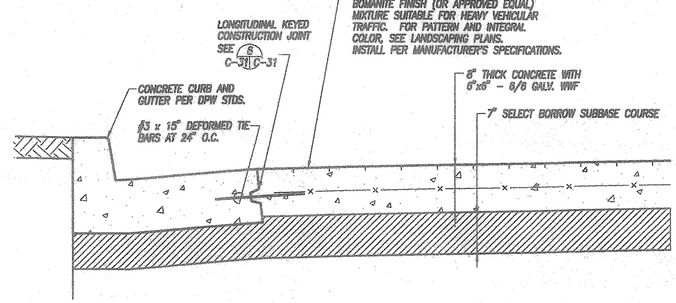

NOTE: CONCRETE PAVEMENT, CURB AND GUTTER, AND ALL JOINTS SHALL BE AS PER APPLICABLE DPW STANDARD DETAILS FOR PUBLIC WORKS CONSTRUCTION.

(BID ADDITIVE ALTERNATE #1) 10 IMPRESSED CONCRETE PAVEMENT

VARIOUS | C-31

SCALE: 1" = 1'-0"

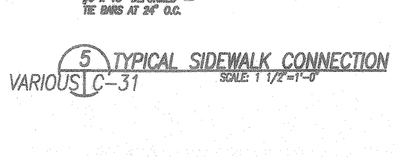

5 TYPICAL SIDEWALK CONNECTION

VARIOUS | C-31

SCALE: 1 1/2"=1'-0"

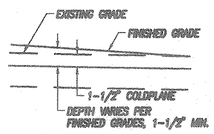

2 PAVEMENT RESURFACING DETAIL

VARIOUS | C-31

NOT TO SCALE

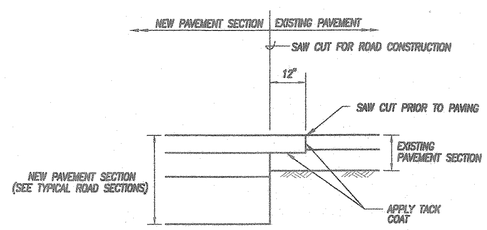

3 PAVEMENT CONNECTION DETAIL

C-31 | C-31

NOT TO SCALE

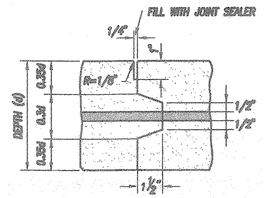

NOTE:
ALL JOINTS SHALL BE SLIGHTLY UNDER FILLED WITH JOINT SEALER PAVING ASPHALT, GRADE SS-100, ASSHTO DESIGNATION : M-20.

6 KEYED CONSTRUCTION JOINT

C-31 | C-31

SCALE: 3"=1'-0"

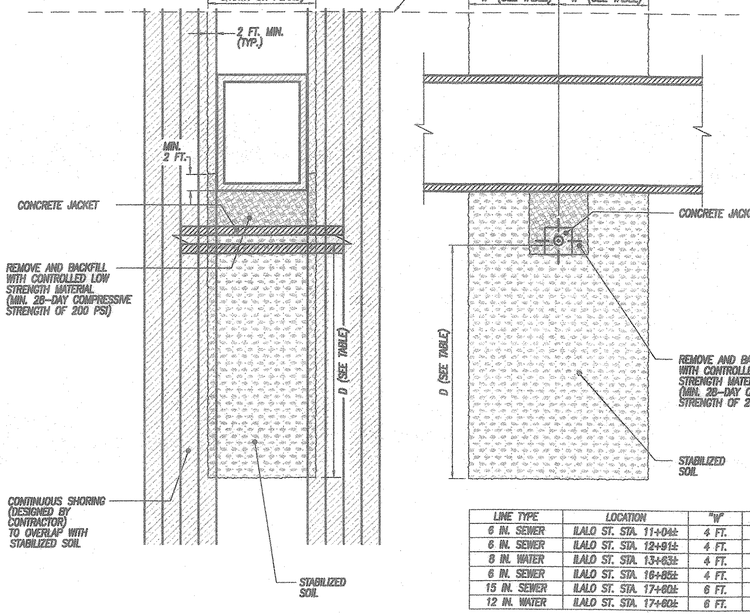

LINE TYPE	LOCATION	"W"	"D"
6 IN. SEWER	ILALO ST. STA. 11+04±	4 FT.	40 FT.
6 IN. SEWER	ILALO ST. STA. 12+91±	4 FT.	40 FT.
8 IN. WATER	ILALO ST. STA. 13+63±	4 FT.	38 FT.
6 IN. SEWER	ILALO ST. STA. 16+85±	4 FT.	38 FT.
15 IN. SEWER	ILALO ST. STA. 17+60±	6 FT.	12 FT.
12 IN. WATER	ILALO ST. STA. 17+60±	6 FT.	12 FT.

8 TYPICAL SOIL STABILIZATION DETAIL

VARIOUS | C-31

NOT TO SCALE

Approved:

M. [signature] 7/18/00
Chief, Civil Engineering Branch, DPP WWT — Date

Dennis M. Nishimura 7/25/00
Chief, Wastewater Branch, DPP ww — Date

for Catherine R. Drungas 7-14-00
Chief, Planning and Engineering, BWS — Date

REVISION	DATE	DESCRIPTION	MADE BY	APPROVED

Planning - Engineering - Environmental Services - Photogrammetry - Surveying - Construction Management
R. M. TOWILL CORPORATION
808 842 1133 420 Waiakamilo Road Suite 411 Honolulu Hawaii 96817-4941

GREG H. HIYAKUMOTO LICENSED PROFESSIONAL ENGINEER No. 6662-C HAWAII, U.S.A.

THIS WORK WAS PREPARED BY ME OR UNDER MY SUPERVISION.

BY: [signature] 7/14/00
R.M. TOWILL CORPORATION

HAWAII COMMUNITY DEVELOPMENT AUTHORITY
STATE OF HAWAII
HONOLULU, HAWAII

KAKA'AKO COMMUNITY DEVELOPMENT DISTRICT
IMPROVEMENT DISTRICT 9
ILALO STREET IMPROVEMENTS

ROADWAY DETAILS--2

ENGINEER: HA — CHECKED BY: GH
DRAFTSMAN: HA — DATE: JULY 13, 2000

EXECUTIVE DIRECTOR, HAWAII COMMUNITY DEVELOPMENT AUTHORITY

ROADWAY.dwg 7-14-00 9:19:24 am EST

"RECORD DRAWINGS" C-31 SHEET 38 OF 140 SHEETS

FILE	POCKET	FOLDER	NO.

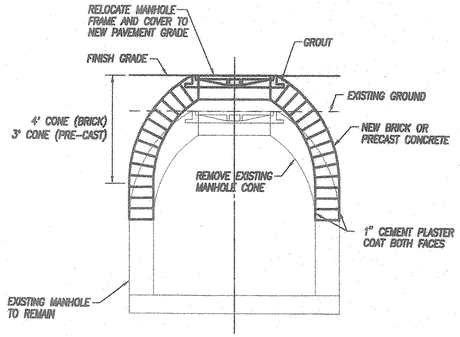

RECONSTRUCT SEWER MANHOLE FRAME AND COVER (RAISING GREATER THAN 3")
(FOR RAISING SMH LESS THAN 3" SEE DPW STD. DETAIL S-25)
1 VARIOUS | C-32
NOT TO SCALE

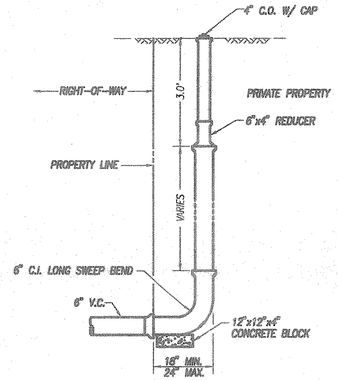

ADVANCE RISER CONNECTION
4 VARIOUS | C-32
NOT TO SCALE

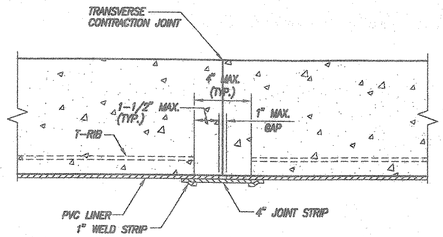

PVC LINER SPLICE FOR CAST-IN-PLACE CONCRETE TYPE C-1
6 C-11, C-32 | C-32
NOT TO SCALE

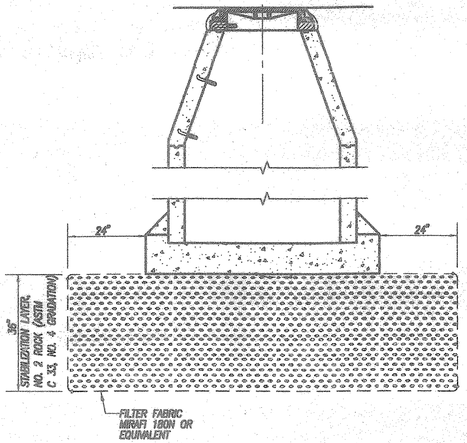

SEWER MANHOLE STABILIZATION LAYER
8 VARIOUS | C-32
NOT TO SCALE

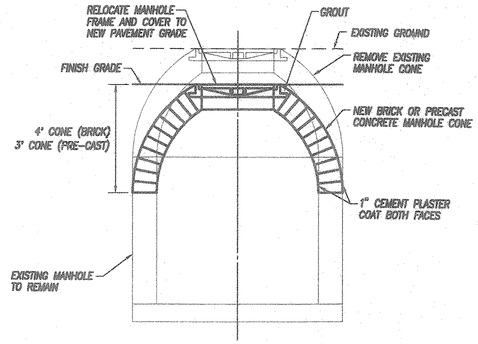

RECONSTRUCT SEWER MANHOLE FRAME AND COVER (LOWERING)
2 VARIOUS | C-32
NOT TO SCALE

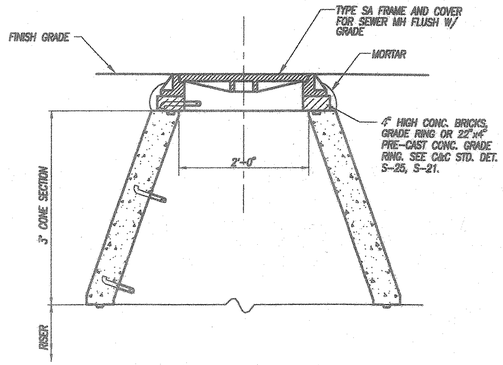

TYP. PRECAST CONC. MANHOLE GRADE RING RISER DETAIL FOR NEW SEWER MANHOLES IN PAVED ROADS
3 C-9 | C-32
NOT TO SCALE

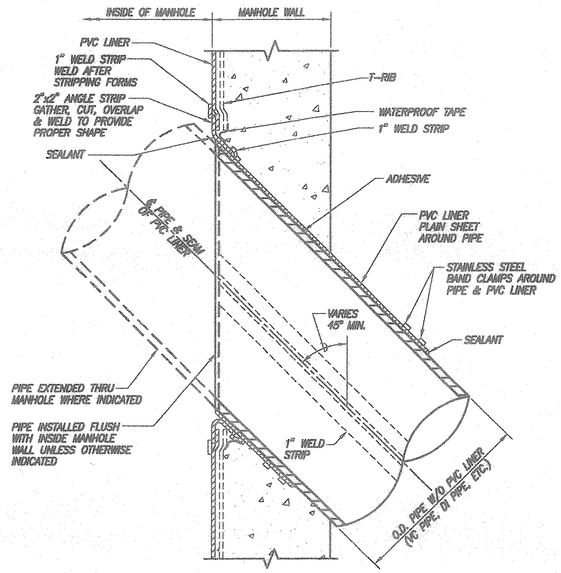

PIPE W/O PVC LINER TURNBACK DETAIL AT WALL OF MANHOLE WITH PVC LINER
5 C-11, C-13 | C-32
NOT TO SCALE

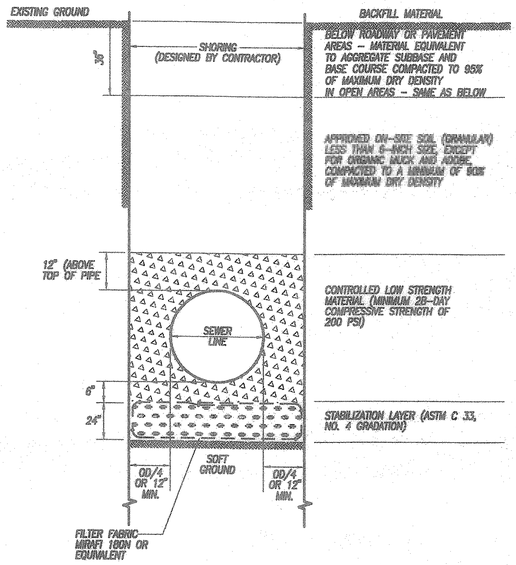

TYPICAL SEWER LINE TRENCH DETAIL
7 VARIOUS | C-32
NOT TO SCALE

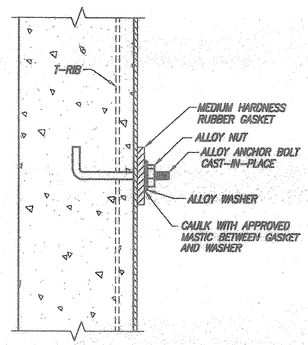

METHOD OF INSTALLING ANCHOR BOLTS THROUGH PVC LINER (OTHER THREADED INSERTS SIMILAR)
9 C-33 | C-32
NOT TO SCALE

Approved:

Dennis M. Nishimura
Chief, Wastewater Branch, DPP DO

7/25/00
Date

REVISION	DATE	DESCRIPTION	MADE BY	APPROVED

Planning - Engineering - Environmental Services - Photogrammetry - Surveying - Construction Management
R. M. TOWILL CORPORATION
808 842 1133 420 Waiakamilo Road Suite 411 Honolulu Hawaii 96817-4941

GREG H. HIYAKUMOTO LICENSED PROFESSIONAL ENGINEER No. 6662-C HAWAII, U.S.A.

THIS WORK WAS PREPARED BY ME OR UNDER MY SUPERVISION.

BY: [signature] 7/19/00
R. M. TOWILL CORPORATION

HAWAII COMMUNITY DEVELOPMENT AUTHORITY
STATE OF HAWAII
HONOLULU, HAWAII
KAKA'AKO COMMUNITY DEVELOPMENT DISTRICT
IMPROVEMENT DISTRICT 9
ILALO STREET IMPROVEMENTS

SEWER DETAILS-1

ENGINEER: HA
DRAFTSMAN: HA
CHECKED BY: GH
DATE: JULY 19, 2000

[signature]
EXECUTIVE DIRECTOR, HAWAII COMMUNITY DEVELOPMENT AUTHORITY

FILE	POCKET	FOLDER	NO.

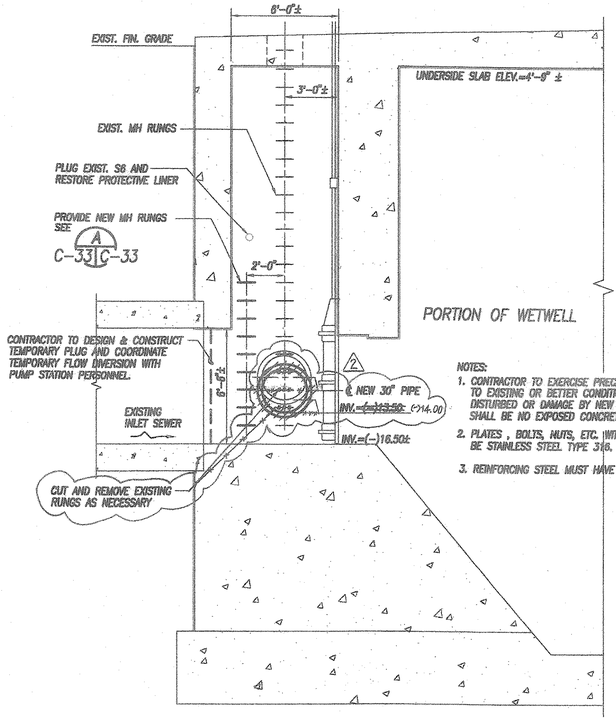

NOTES:
1. CONTRACTOR TO EXERCISE PRECAUTION AND RESTORE TO EXISTING OR BETTER CONDITION ANY PROTECTIVE LINER DISTURBED OR DAMAGE BY NEW CONSTRUCTION. THERE SHALL BE NO EXPOSED CONCRETE.
2. PLATES , BOLTS, NUTS, ETC. WITHIN WETWELLS SHALL BE STAINLESS STEEL TYPE 316.
3. REINFORCING STEEL MUST HAVE 3" MIN. CONCRETE COVER.

1 30" SEWER CONNECTION TO WETWELL INTAKE BOX
C-13, C-33 | C-33 SCALE: 1/4" = 1'-0"

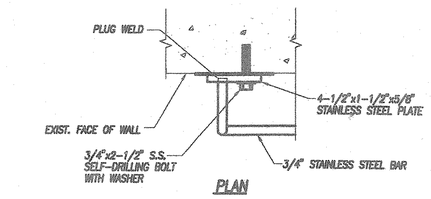

PLAN

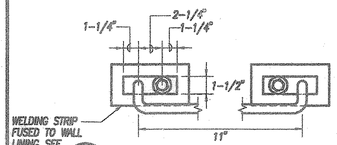

FRONT ELEVATION

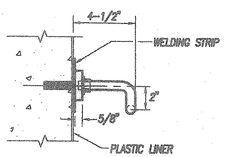

SIDE ELEVATION

NOTES:
1. ALL ITEMS TO BE STAINLESS STEEL TYPE 316.
2. WELDING OF PLATE AND BAR TO FABRICATE RUNG SHALL RESULT IN JOINTS WITH EQUAL STRENGTH AND CORROSION RESISTANCE AS THE S.S. MATERIALS BEING WELDED.

A MODIFIED TYPE SF MANHOLE RUNG DETAILS
C-33 | C-33 SCALE: 2" = 1'-0"

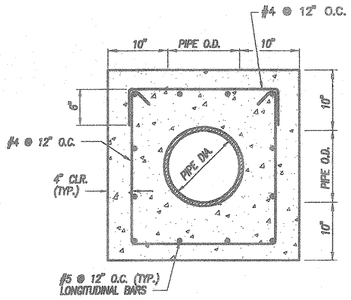

2 REINFORCED CONCRETE JACKET FOR PIPES GREATER THAN 12" DIA.
VARIOUS | C-33 NOT TO SCALE

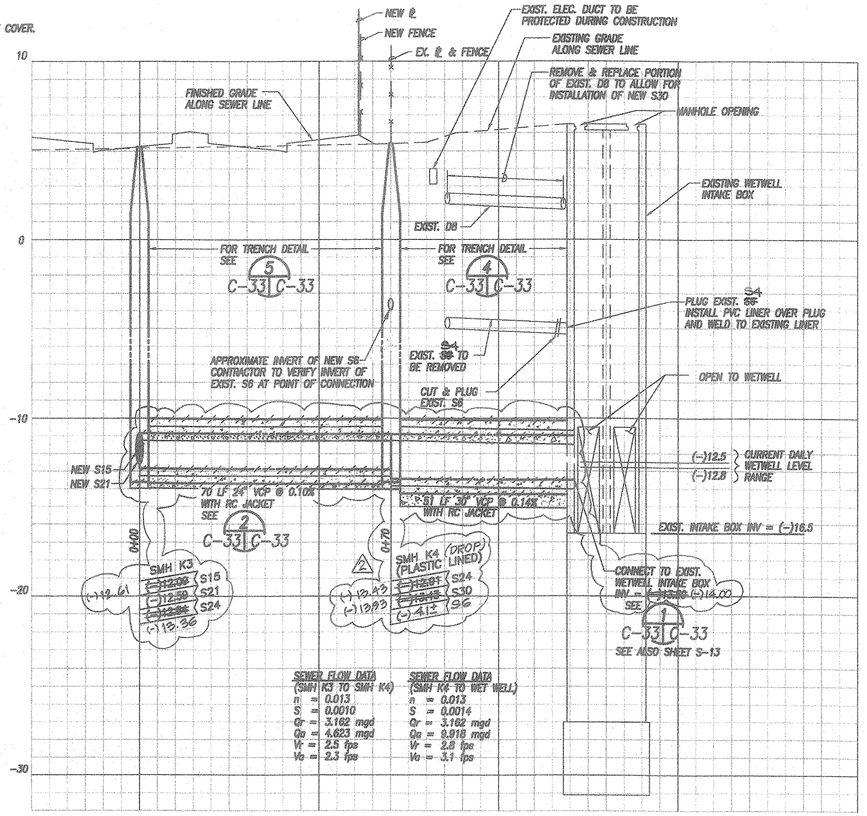

SEWER FLOW DATA (SMH K3 TO SMH K4)
n = 0.013
S = 0.0010
Qr = 3.162 mgd
Qa = 4.623 mgd
Vr = 2.5 fps
Va = 2.3 fps

SEWER FLOW DATA (SMH K4 TO WET WELL)
n = 0.013
S = 0.0014
Qr = 3.162 mgd
Qa = 8.918 mgd
Vr = 2.9 fps
Va = 3.1 fps

3 SEWERLINE PROFILE AT CONNECTION TO WETWELL
C-13 | C-33 SCALE: HORIZ. 1" = 20' VERT. 1" = 4'

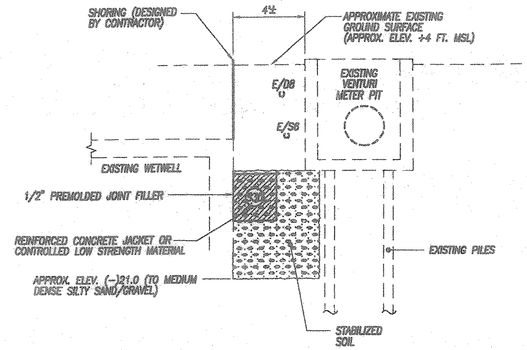

4 SEWERLINE TRENCH DETAIL FOR CONNECTION TO WETWELL
C-33 | C-33 NOT TO SCALE

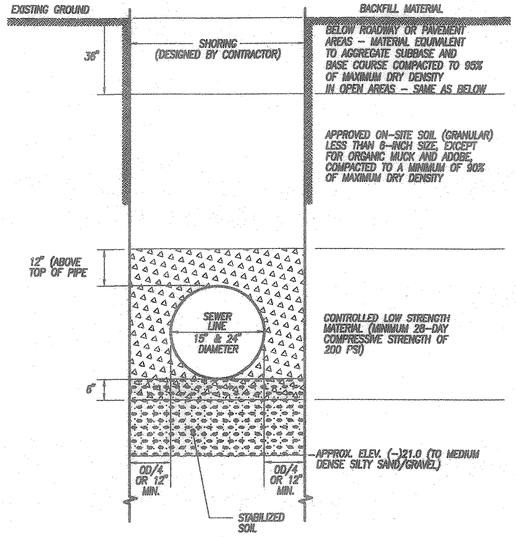

5 TYPICAL SEWERLINE TRENCH DETAIL OVER SOIL STABILIZATION AREAS
VARIOUS | C-33 NOT TO SCALE

Approved:

Dennis M. Nishimura
Chief, Wastewater Branch, DPP HJ

7/25/00
Date

REVISION	DATE	DESCRIPTION	MADE BY	APPROVED
2	1/8/01	LOWERED SEWER LINE PROFILE BECAUSE BY 2-11-B 24"60 HAS RUNS ENTIRE TRANSITION OVAL BARRS	LSY	HJ 3/2/01 WWB DATE

Plumbing – Engineering – Environmental Services – Photogrammetry – Surveying – Construction Management
R. M. TOWILL CORPORATION
808 842 1133 420 Waiakamilo Road Suite 411 Honolulu Hawaii 96817-4941

GREG H. HIYAKUMOTO LICENSED PROFESSIONAL ENGINEER No. 6652-C HAWAII, U.S.A.

THIS WORK WAS PREPARED BY ME OR UNDER MY SUPERVISION.

BY: R. M. TOWILL CORPORATION

HAWAII COMMUNITY DEVELOPMENT AUTHORITY
STATE OF HAWAII
HONOLULU, HAWAII

KAKA'AKO COMMUNITY DEVELOPMENT DISTRICT
IMPROVEMENT DISTRICT 9
ILALO STREET IMPROVEMENTS

SEWER DETAILS--2

ENGINEER: HA
DRAFTSMAN: HA
CHECKED BY: GH
DATE: JULY 21, 2000

EXECUTIVE DIRECTOR, HAWAII COMMUNITY DEVELOPMENT AUTHORITY

FILE	POCKET	FOLDER	NO.

"RECORD DRAWINGS" C-33

Sewer2.dwg 7-19-00 1:24:26 pm EST

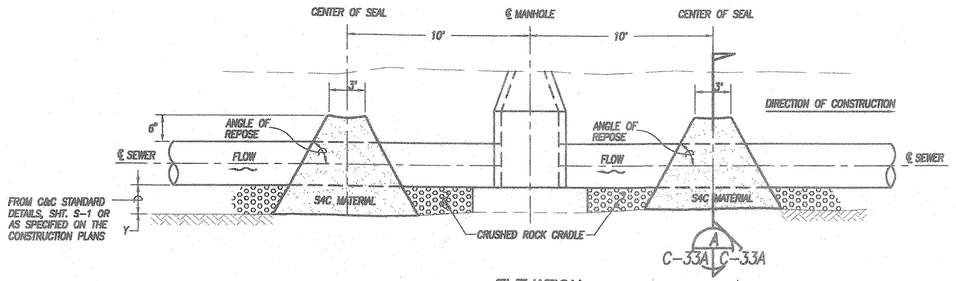

ELEVATION

NOTES:

1. SEALS SHALL BE PLACED 10 FT. UPSTREAM AND DOWNSTREAM FROM EACH MANHOLE.
2. THE CONTRACTOR SHALL COMPACT SAC MATERIAL BY PONDING AND DRAINING. UPON DRAINING, A VIBRATORY MACHINE SHALL BE USED UNTIL NO VISIBLE EVIDENCE OF FURTHER CONSOLIDATION EXISTS.
3. SEALS SHALL NOT BE PAID FOR SEPARATELY BUT SHALL BE CONSIDERED INCIDENTAL TO CRUSHED ROCK CRADLE.

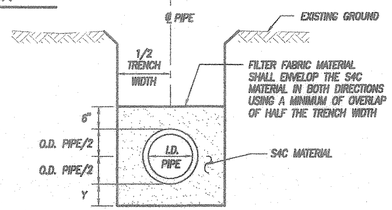

A
C-33A C-33A SECTION NOT TO SCALE

1 PIPE CRADLE AND SEAL DETAIL
G-3 C-33A NOT TO SCALE

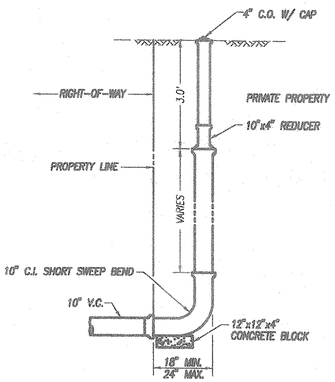

2 SPECIAL ADVANCE RISER CONNECTION
C-13 C-33A NOT TO SCALE

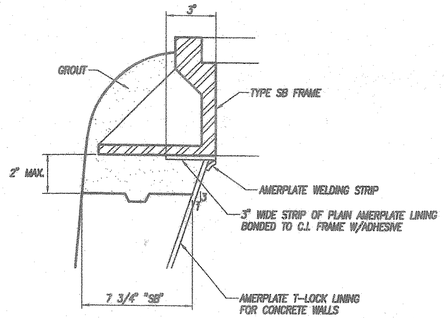

3 RAISING KEAWE STREET SEWER MANHOLE
C-18 C-33A NOT TO SCALE

Approved:

Dennis M. Nishimura
Chief, Wastewater Branch, DPP hr

7/25/00
Date

REVISION	DATE	DESCRIPTION	MADE BY	APPROVED

Planning – Engineering – Environmental Services – Photogrammetry – Surveying – Construction Management
R. M. TOWILL CORPORATION
808 842 1133 420 Waiakamilo Road Suite 411 Honolulu Hawaii 96817-4941

GREG H. HIYAKUMOTO LICENSED PROFESSIONAL ENGINEER No. 6662-C HAWAII, U.S.A.

THIS WORK WAS PREPARED BY ME OR UNDER MY SUPERVISION.

BY: 7/21/00
R. M. TOWILL CORPORATION

HAWAII COMMUNITY DEVELOPMENT AUTHORITY
STATE OF HAWAII
HONOLULU, HAWAII

KAKA'AKO COMMUNITY DEVELOPMENT DISTRICT
IMPROVEMENT DISTRICT 9
ILALO STREET IMPROVEMENTS

SEWER DETAILS-3

ENGINEER: LSY CHECKED BY: GH
DRAFTSMAN: JU DATE: JULY 19, 2000

EXECUTIVE DIRECTOR, HAWAII COMMUNITY DEVELOPMENT AUTHORITY

FILE	POCKET	FOLDER	NO.

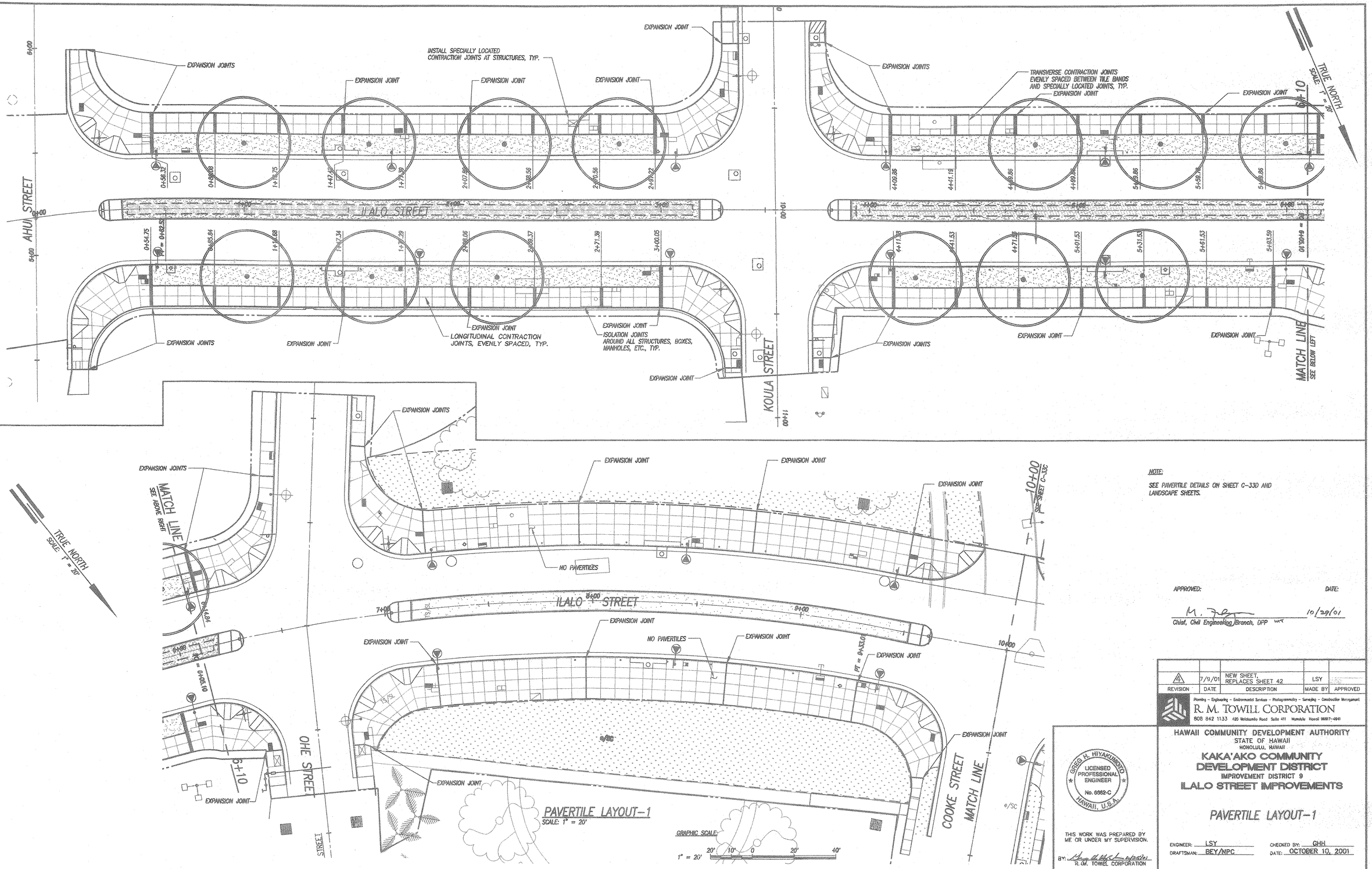

NOTE:

SEE PAVERTILE DETAILS ON SHEET C-33D AND LANDSCAPE SHEETS.

APPROVED: DATE:

M. [signature] 10/29/01

Chief, Civil Engineering Branch, DPP

REVISION	DATE	DESCRIPTION	MADE BY	APPROVED
4	7/9/01	NEW SHEET, REPLACES SHEET 42	LSY	

Planning - Engineering - Environmental Services - Photogrammetry - Surveying - Construction Management

R. M. TOWILL CORPORATION

808 842 1133 420 Waiakamilo Road Suite 411 Honolulu Hawaii 96817-4941

GREG H. HIYAKUMOTO LICENSED PROFESSIONAL ENGINEER No. 6662-C HAWAII, U.S.A.

THIS WORK WAS PREPARED BY ME OR UNDER MY SUPERVISION.

BY: [signature] 10/25/01

R. M. TOWILL CORPORATION

HAWAII COMMUNITY DEVELOPMENT AUTHORITY

STATE OF HAWAII

HONOLULU, HAWAII

KAKA'AKO COMMUNITY DEVELOPMENT DISTRICT

IMPROVEMENT DISTRICT 9

ILALO STREET IMPROVEMENTS

PAVERTILE LAYOUT-1

ENGINEER: LSY CHECKED BY: GHH

DRAFTSMAN: BEY/NPC DATE: OCTOBER 10, 2001

EXECUTIVE DIRECTOR, HAWAII COMMUNITY DEVELOPMENT AUTHORITY

FILE	POCKET	FOLDER	NO.

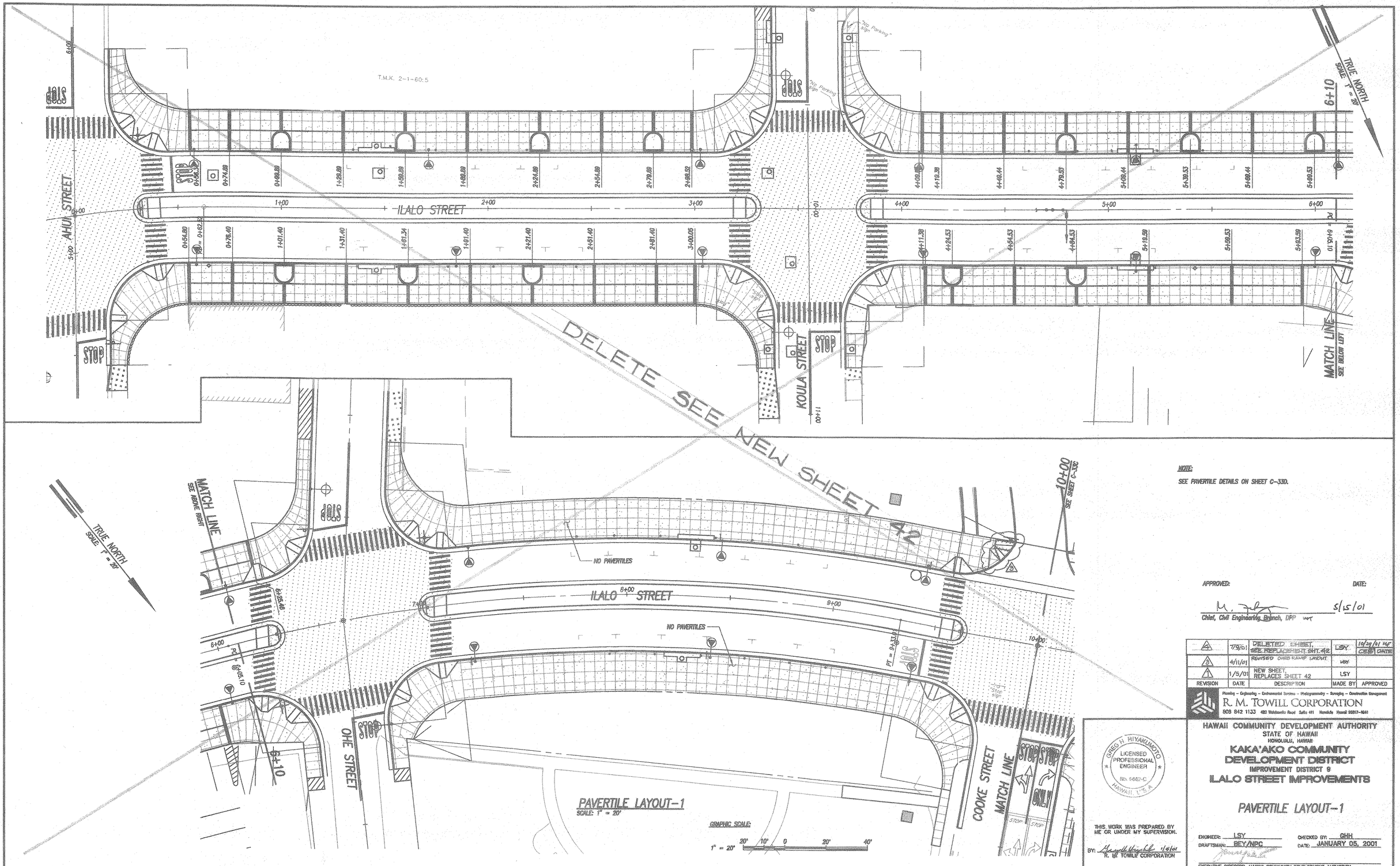

NOTE:

SEE PAVERTILE DETAILS ON SHEET C-33D.

APPROVED: DATE:

M. [signature] 5/15/01

Chief, Civil Engineering Branch, DPP

REVISION	DATE	DESCRIPTION	MADE BY	APPROVED
4	7/9/01	DELETED SHEET, SEE REPLACEMENT SHT. 42	LSY	10/29/01 MF CES DATE
3	4/11/01	REVISED CURB RAMP LAYOUT	LSY	
1	1/5/01	NEW SHEET, REPLACES SHEET 42	LSY	

Planning – Engineering – Environmental Services – Photogrammetry – Surveying – Construction Management

R. M. TOWILL CORPORATION

808 842 1133 420 Waiakamilo Road Suite 411 Honolulu Hawaii 96817-4941

GREG H. HIYAKUMOTO LICENSED PROFESSIONAL ENGINEER No. 6662-C HAWAII, U.S.A.

THIS WORK WAS PREPARED BY ME OR UNDER MY SUPERVISION.

BY: [signature] 1/5/01 R. M. TOWILL CORPORATION

HAWAII COMMUNITY DEVELOPMENT AUTHORITY
STATE OF HAWAII
HONOLULU, HAWAII

KAKA'AKO COMMUNITY DEVELOPMENT DISTRICT

IMPROVEMENT DISTRICT 9

ILALO STREET IMPROVEMENTS

PAVERTILE LAYOUT-1

ENGINEER: LSY CHECKED BY: GHH

DRAFTSMAN: BEY/NPC DATE: JANUARY 05, 2001

EXECUTIVE DIRECTOR, HAWAII COMMUNITY DEVELOPMENT AUTHORITY

"RECORD DRAWINGS" C-33B SHEET 42 OF 140 SHEETS

FILE	POCKET	FOLDER	NO.

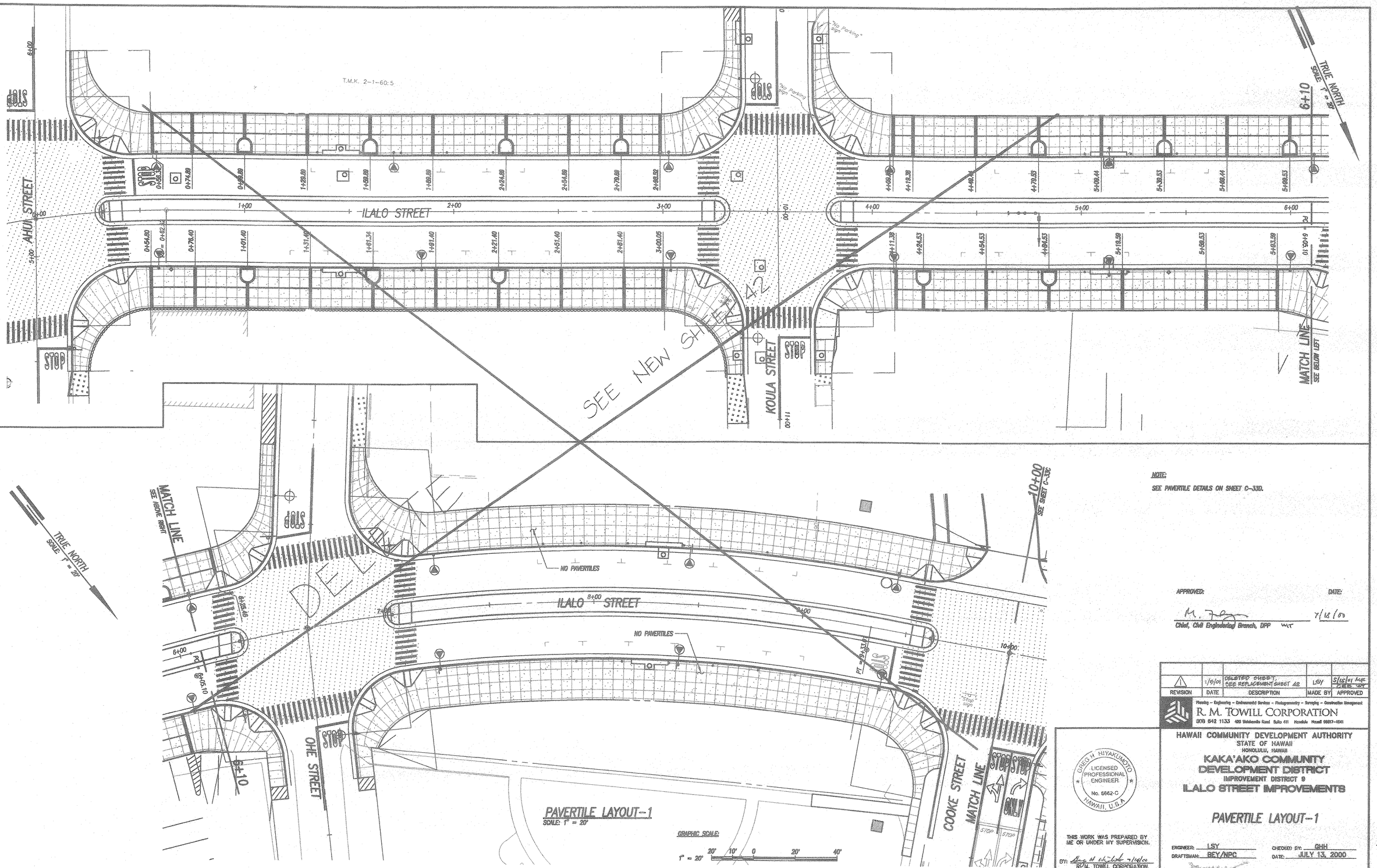

PAVERTILE LAYOUT--1
SCALE: 1" = 20'

GRAPHIC SCALE:
1" = 20' 20' 10' 0 20' 40'

NOTE:
SEE PAVERTILE DETAILS ON SHEET C-33D.

APPROVED: DATE:
Chief, Civil Engineering Branch, DPP 7/18/00

REVISION	DATE	DESCRIPTION	MADE BY	APPROVED
1	1/9/01	DELETED SHEET, SEE REPLACEMENT SHEET 42	LSY	5/15/01

Planning – Engineering – Environmental Services – Photogrammetry – Surveying – Construction Management
R. M. TOWILL CORPORATION
808 842 1133 420 Waiakamilo Road Suite 411 Honolulu Hawaii 96817-4941

GREG H. HIYAKUMOTO
LICENSED PROFESSIONAL ENGINEER
No. 6662-C
HAWAII, U.S.A.

THIS WORK WAS PREPARED BY ME OR UNDER MY SUPERVISION.
BY: 7/18/00
R. M. TOWILL CORPORATION

HAWAII COMMUNITY DEVELOPMENT AUTHORITY
STATE OF HAWAII
HONOLULU, HAWAII
KAKA'AKO COMMUNITY DEVELOPMENT DISTRICT
IMPROVEMENT DISTRICT 9
ILALO STREET IMPROVEMENTS

PAVERTILE LAYOUT--1

ENGINEER: LSY CHECKED BY: GHH
DRAFTSMAN: BEY/NPC DATE: JULY 13, 2000
EXECUTIVE DIRECTOR, HAWAII COMMUNITY DEVELOPMENT AUTHORITY

VOID 7/9/01

"RECORD DRAWINGS" C-33B SHEET 42 OF 140 SHEETS

FILE	POCKET	FOLDER	NO.

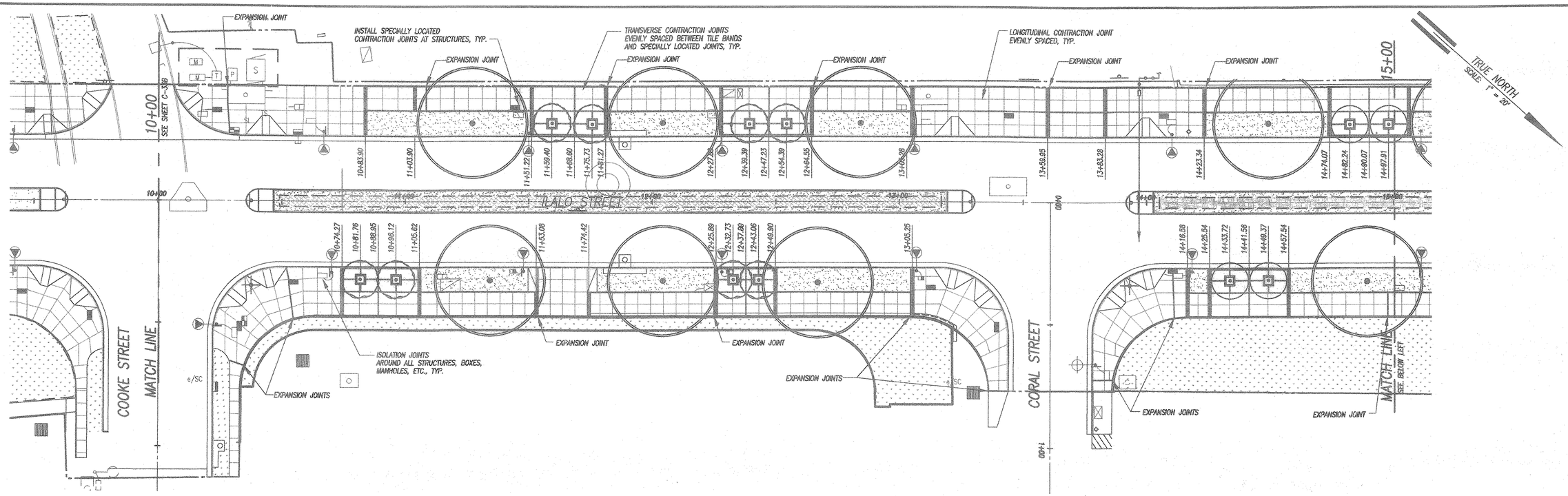

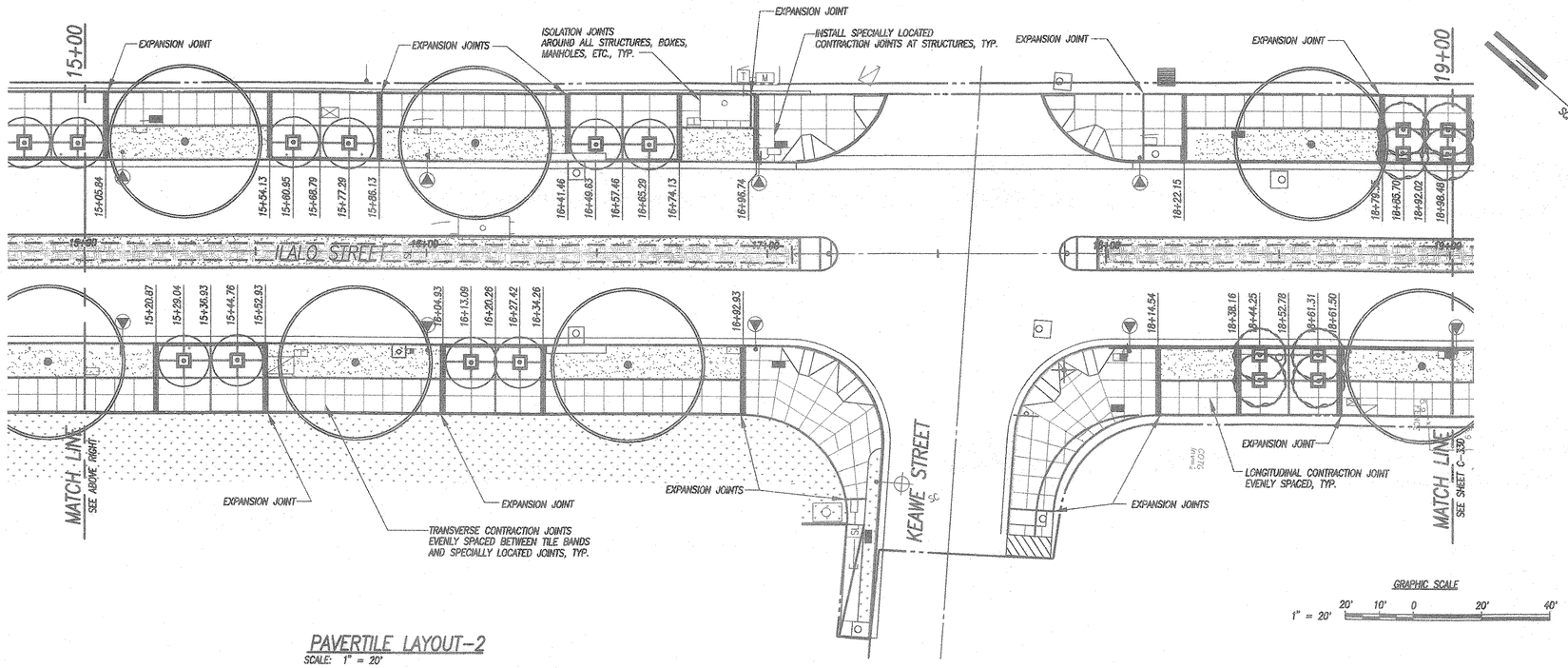

PAVERTILE LAYOUT-2
SCALE: 1" = 20'

GRAPHIC SCALE
1" = 20'
20' 10' 0 20' 40'

NOTE:
SEE PAVERTILE DETAILS ON SHEET C-330 AND LANDSCAPE SHEETS.

APPROVED:

Chief, Civil Engineering Branch, DPP — Date 10/29/01

REVISION	DATE	DESCRIPTION	MADE BY	APPROVED
1	7/9/01	NEW SHEET, REPLACES SHEET 43	LSY	

Planning – Engineering – Environmental Services – Photogrammetry – Surveying – Construction Management
R. M. TOWILL CORPORATION
808 842 1133 420 Waiakamilo Road Suite 411 Honolulu Hawaii 96817-4941

GREG H. HIYAKUMOTO
LICENSED PROFESSIONAL ENGINEER
No. 6862-C
HAWAII, U.S.A.

THIS WORK WAS PREPARED BY ME OR UNDER MY SUPERVISION.

BY: R. M. TOWILL CORPORATION 10/29/01

HAWAII COMMUNITY DEVELOPMENT AUTHORITY
STATE OF HAWAII
HONOLULU, HAWAII

KAKA'AKO COMMUNITY DEVELOPMENT DISTRICT
IMPROVEMENT DISTRICT 9
ILALO STREET IMPROVEMENTS

PAVERTILE LAYOUT – 2

ENGINEER: LSY
DRAFTSMAN: JU/NPC
CHECKED BY: GHH
DATE: OCTOBER 15, 2001

EXECUTIVE DIRECTOR, HAWAII COMMUNITY DEVELOPMENT AUTHORITY

"RECORD DRAWINGS" C-330 SHEET 43 OF 140 SHEETS

FILE	POCKET	FOLDER	NO.

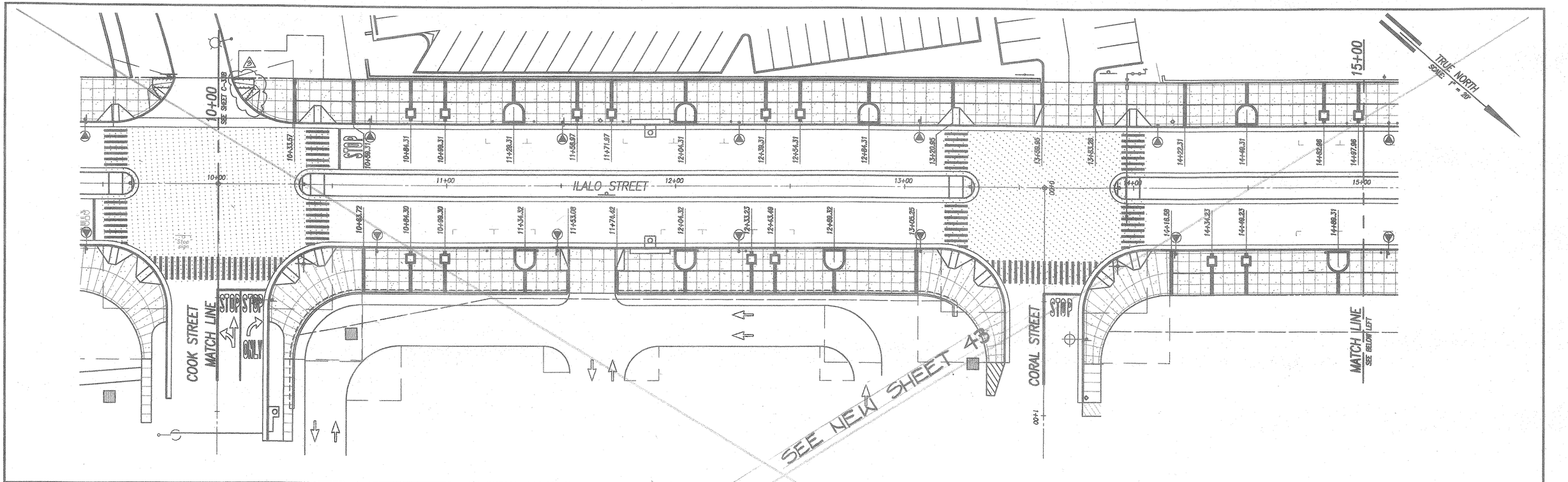

PAVERTILE LAYOUT–2
SCALE: 1" = 20'

NOTE:

SEE PAVERTILE DETAILS ON SHEET C-33D

APPROVED:

5/15/01

Chief, Civil Engineering Branch, DPP — Date

REVISION	DATE	DESCRIPTION	MADE BY	APPROVED
4	7/9/01	DELETED SHEET SEE REPLACEMENT SHT 43	LSY	10/29/01 AHP CEB DATE
3	4/11/01	REVISED CURB RAMP LAYOUT	LSY	
2	1/5/01	NEW SHEET, REPLACES SHEET 43	LSY	

Planning – Engineering – Environmental Services – Photogrammetry – Surveying – Construction Management
R. M. TOWILL CORPORATION
808 842 1133 420 Waiakamilo Road Suite 411 Honolulu Hawaii 96817-4941

GREG H. HIYAKUMOTO
LICENSED PROFESSIONAL ENGINEER
No. 6662-C
HAWAII, U.S.A.

THIS WORK WAS PREPARED BY ME OR UNDER MY SUPERVISION.

BY: 11/5/01
R.M. TOWILL CORPORATION

HAWAII COMMUNITY DEVELOPMENT AUTHORITY
STATE OF HAWAII
HONOLULU, HAWAII

KAKA'AKO COMMUNITY DEVELOPMENT DISTRICT
IMPROVEMENT DISTRICT 9
ILALO STREET IMPROVEMENTS

PAVERTILE LAYOUT – 2

ENGINEER: LSY
DRAFTSMAN: JU/NPC
CHECKED BY: GHH
DATE: JANUARY 05, 2001

EXECUTIVE DIRECTOR, HAWAII COMMUNITY DEVELOPMENT AUTHORITY

FILE	POCKET	FOLDER	NO.

"RECORD DRAWINGS" C-33C SHEET 43 OF 140 SHEETS

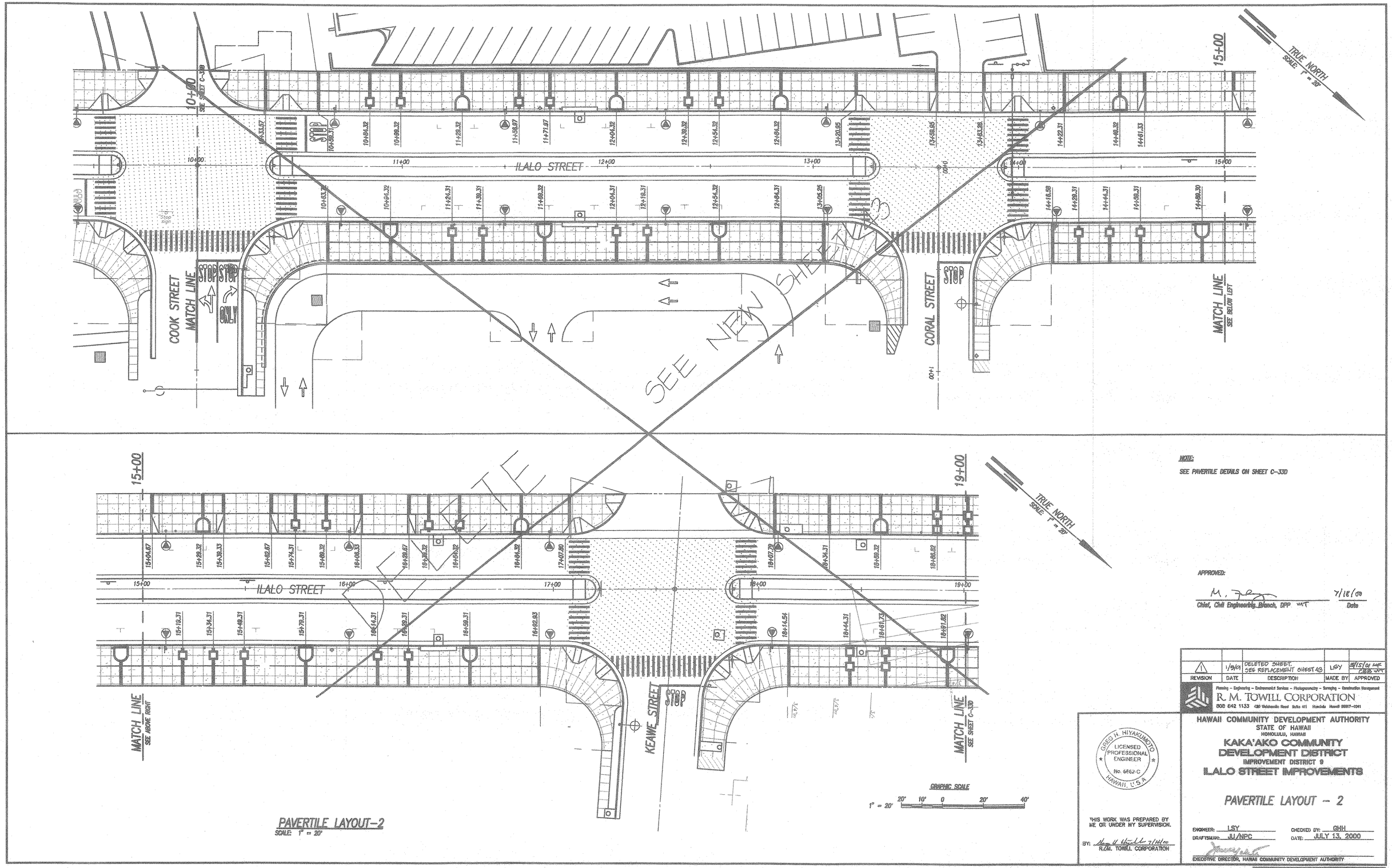

PAVERTILE LAYOUT-2
SCALE: 1" = 20'

NOTE:
SEE PAVERTILE DETAILS ON SHEET C-33D

APPROVED:

M. [signature] 7/18/00
Chief, Civil Engineering Branch, DPP MT Date

REVISION	DATE	DESCRIPTION	MADE BY	APPROVED
1	1/9/01	DELETED SHEET. SEE REPLACEMENT SHEET 43	LSY	5/15/01 MF CEB MT

Planning – Engineering – Environmental Services – Photogrammetry – Surveying – Construction Management
R. M. TOWILL CORPORATION
808 842 1133 420 Waiakamilo Road Suite 411 Honolulu Hawaii 96817-4041

GREG H. HIYAKUMOTO
LICENSED PROFESSIONAL ENGINEER
No. 6662-C
HAWAII, U.S.A.

THIS WORK WAS PREPARED BY ME OR UNDER MY SUPERVISION.

BY: [signature] 7/14/00
R.M. TOWILL CORPORATION

HAWAII COMMUNITY DEVELOPMENT AUTHORITY
STATE OF HAWAII
HONOLULU, HAWAII

KAKA'AKO COMMUNITY DEVELOPMENT DISTRICT
IMPROVEMENT DISTRICT 9
ILALO STREET IMPROVEMENTS

PAVERTILE LAYOUT – 2

ENGINEER: LSY CHECKED BY: GHH
DRAFTSMAN: JU/NPC DATE: JULY 13, 2000

[signature]
EXECUTIVE DIRECTOR, HAWAII COMMUNITY DEVELOPMENT AUTHORITY

VOID 7/9/01

"RECORD DRAWINGS" C-33C SHEET 43 OF 140 SHEETS

FILE	POCKET	FOLDER	NO.

paver2.dwg 7-14-00 10:09:11 am EST

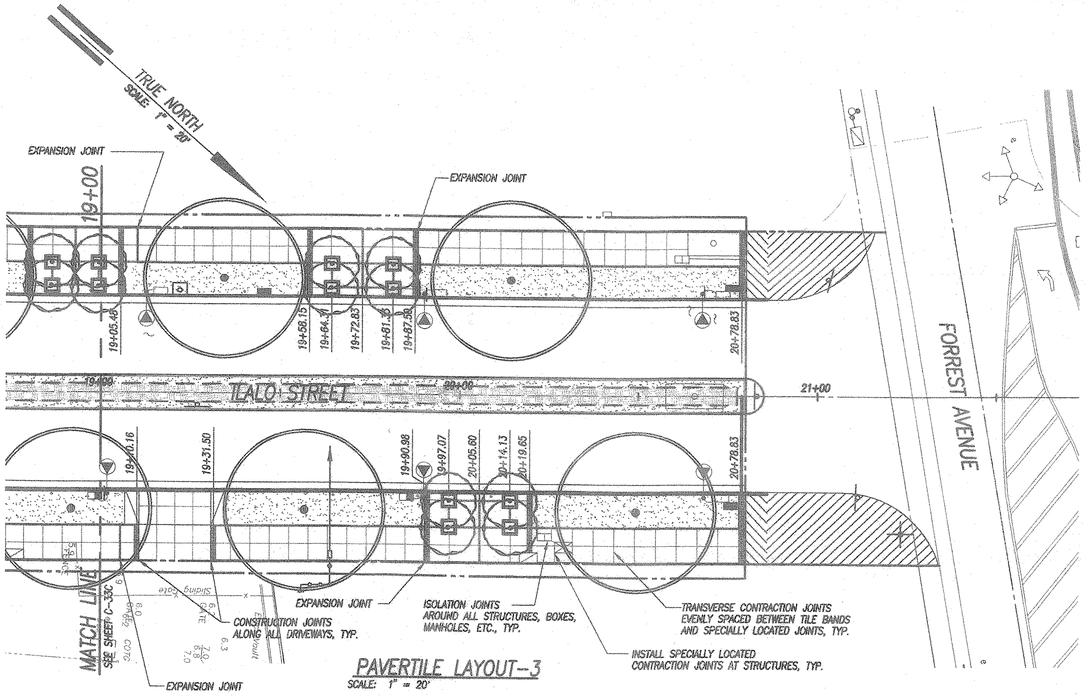

PAVERTILE LAYOUT--3
SCALE: 1" = 20'

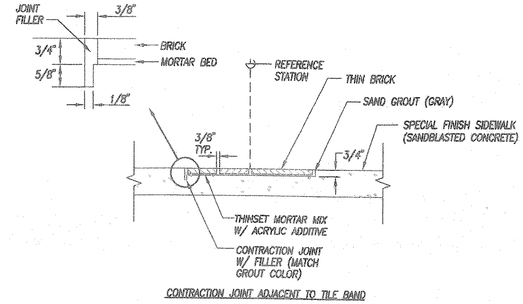

CONTRACTION JOINT ADJACENT TO TILE BAND

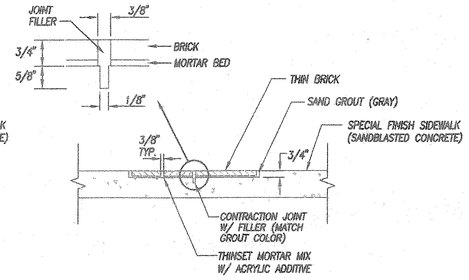

CONTRACTION JOINT BETWEEN TILES

SECTION A-A
SCALE: 1 1/2" = 1'-0"

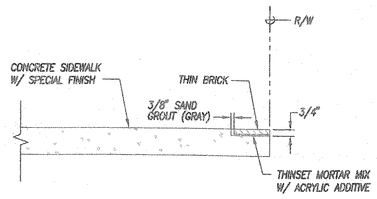

SECTION B-B
SCALE: 1 1/2" = 1'-0"

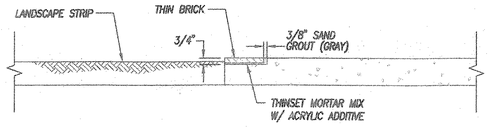

SECTION C-C
SCALE: 1 1/2" = 1'-0"

NOTES:

1. ALL PAVERTILES SHALL BE 4"W x 8"L x 1/2"T THIN BRICK MEDIUM IRONSPOT #46 COLOR WITH WIRECUT TEXTURE (ENDICOTT CLAY PRODUCTS OR EQUAL).
2. CONCRETE SURFACES SHALL BE CLEAN AND FREE OF DUST AND DEBRIS PRIOR TO PLACEMENT OF THIN BRICKS.
3. THIN BRICKS SHALL BE SET WITH TOPS FLUSH WITH THE SIDEWALKS.
4. WHERE EVER ANY JOINT CROSSES A PAVERTILE, THE TILE SHALL BE CUT ALONG THE JOINT ACCORDING TO THE MANUFACTURER'S RECOMMENDATIONS.
5. PAVERTILES SHALL NOT BE PLACED ON ELECTRICAL, TELEPHONE OR CABLE T.V. BOXES.

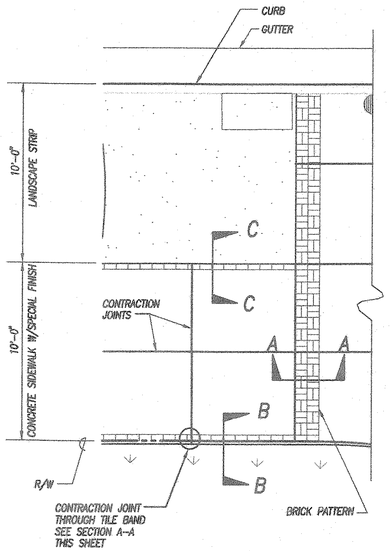

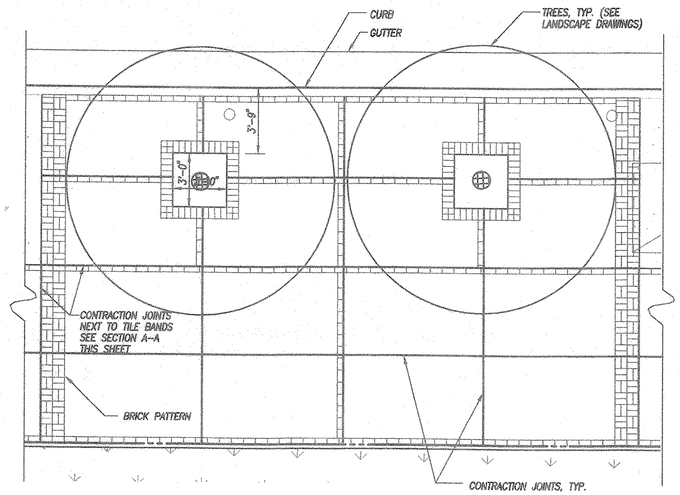

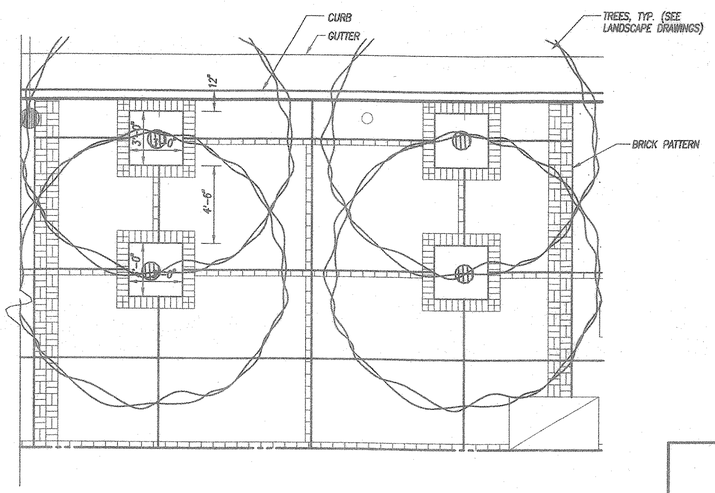

ENLARGED PLAN -- PAVERTILE AND TREE CLUSTER AREAS
SCALE: 1/4" = 1'-0"

GRAPHIC SCALE:

1" = 20' 20' 10' 0 20' 40'

1/4" = 1'-0" 4' 0 4' 8'

APPROVED:

M. [signature] 10/29/01

Chief, Civil Engineering Branch, DPP Date

REVISION	DATE	DESCRIPTION	MADE BY	APPROVED
4	7/9/01	NEW SHEET, REPLACES SHEET 44	LSY	

Planning - Engineering - Environmental Services - Photogrammetry - Surveying - Construction Management
R. M. TOWILL CORPORATION
808 842 1133 420 Nicholas Road Suite 411 Honolulu Hawaii 96817-4941

GREER H. HIYAKUMOTO LICENSED PROFESSIONAL ENGINEER No. 3882-C HAWAII, U.S.A.

THIS WORK WAS PREPARED BY ME OR UNDER MY SUPERVISION.

BY: [signature] for R.M. TOWILL CORPORATION

HAWAII COMMUNITY DEVELOPMENT AUTHORITY
STATE OF HAWAII
HONOLULU, HAWAII

KAKA'AKO COMMUNITY DEVELOPMENT DISTRICT
IMPROVEMENT DISTRICT 9
ILALO STREET IMPROVEMENTS

PAVERTILE LAYOUT-3 & DETAILS

ENGINEER: LSY CHECKED BY: GHH
DRAFTSMAN: NPC DATE: OCTOBER 15, 2001

EXECUTIVE DIRECTOR, HAWAII COMMUNITY DEVELOPMENT AUTHORITY

"RECORD DRAWINGS" C-330 SHEET 44 OF 140 SHEETS

FILE	POCKET	FOLDER	NO.

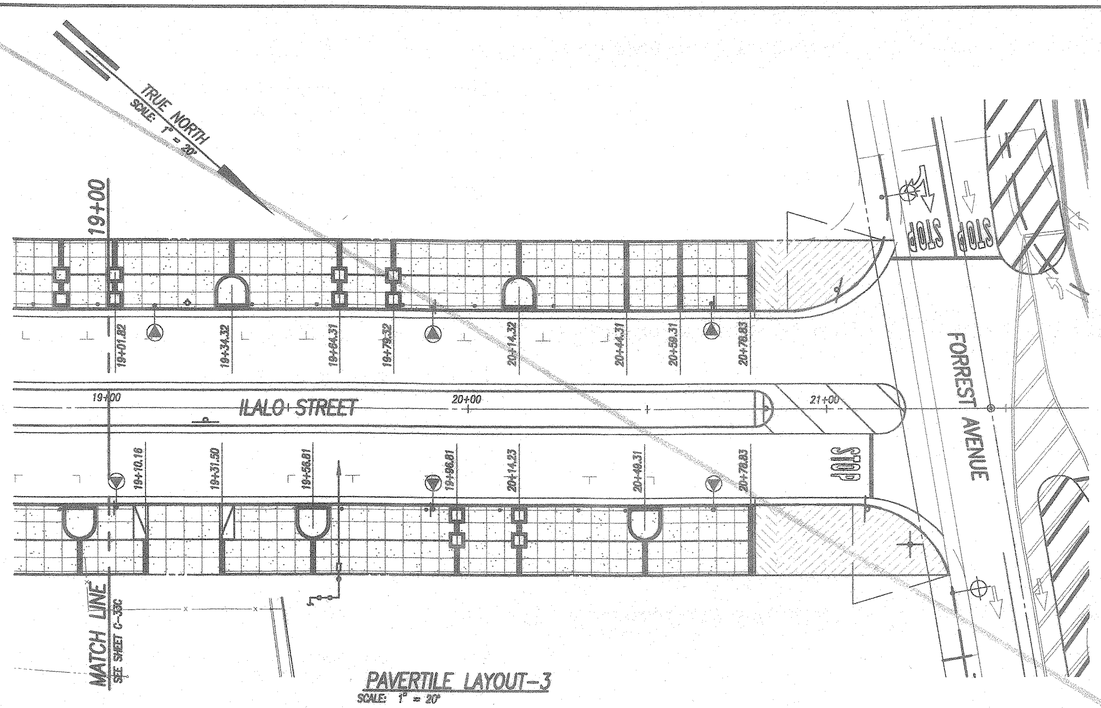

PAVERTILE LAYOUT-3
SCALE: 1" = 20'

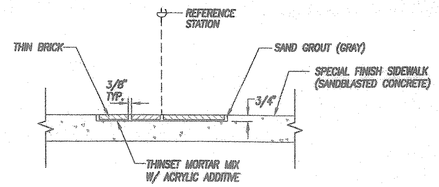

SECTION A-A
SCALE: 1 1/2" = 1'-0"

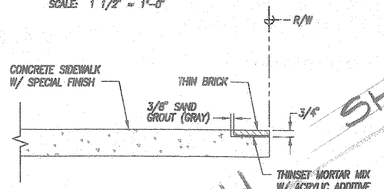

SECTION B-B
SCALE: 1 1/2" = 1'-0"

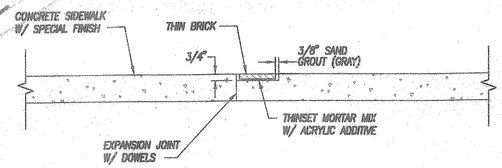

SECTION C-C
SCALE: 1 1/2" = 1'-0"

NOTES:

1. ALL PAVERTILES SHALL BE 4"W x 8"L x 1/2"T THIN BRICK MEDIUM IRONSPOT #48 COLOR WITH WIRECUT TEXTURE (ENDICOTT CLAY PRODUCTS OR EQUAL).
2. CONCRETE SURFACES SHALL BE CLEAN AND FREE OF DUST AND DEBRIS PRIOR TO PLACEMENT OF THIN BRICKS.
3. THIN BRICKS SHALL BE SET WITH TOPS FLUSH WITH THE SIDEWALKS.
4. EVERY THIRD TRANSVERSE SCORELINE SHALL BE AN EXPANSION JOINT W/ DOWELS. ALL OTHERS SHALL BE CONTRACTION JOINTS.
5. WHERE EVER ANY JOINT CROSSES A PAVERTILE, THE TILE SHALL BE CUT ALONG THE JOINT ACCORDING TO THE MANUFACTURER'S RECOMMENDATIONS.
6. PAVERTILES SHALL NOT BE PLACED ON ELECTRICAL, TELEPHONE OR CABLE T.V. BOXES.

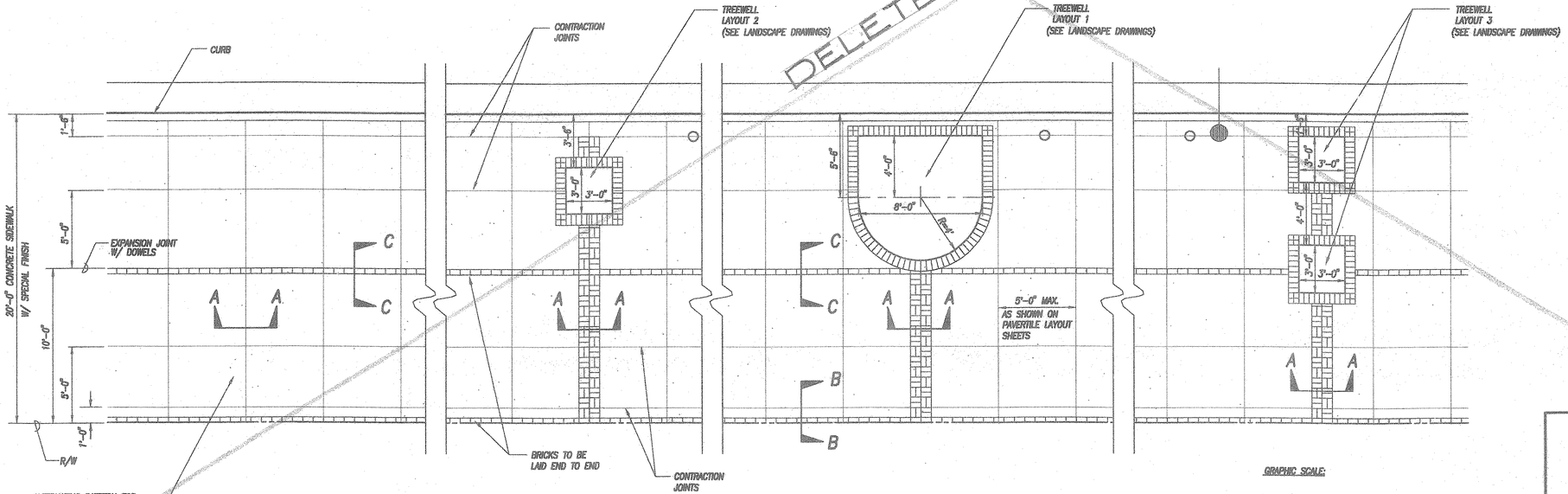

ENLARGED PLAN - PAVERTILE AND TREEWELLS
SCALE: 1/4" = 1'-0"

GRAPHIC SCALE:

1" = 20' — 20' 10' 0 20' 40'

1/8" = 1'-0" — 4' 0 4' 8'

APPROVED:

Chief, Civil Engineering Branch, DPP — Date: 5/15/01

REVISION	DATE	DESCRIPTION	MADE BY	APPROVED
2	7/9/01	DELETED SHEET SEE REPLACEMENT SHT 44	LSY	10/29/01 MM CHIEF'S DATE
1	1/5/01	NEW SHEET, REPLACES SHEET 44	LSY	

R. M. TOWILL CORPORATION
Planning – Engineering – Environmental Services – Photogrammetry – Surveying – Construction Management
808 842 1133 420 Waiakamilo Road Suite 411 Honolulu Hawaii 96817-4941

GREGG H. HIYAKUMOTO LICENSED PROFESSIONAL ENGINEER No. 6662-C HAWAII, U.S.A.

THIS WORK WAS PREPARED BY ME OR UNDER MY SUPERVISION.

BY: R. M. TOWILL CORPORATION 1/5/01

HAWAII COMMUNITY DEVELOPMENT AUTHORITY
STATE OF HAWAII
HONOLULU, HAWAII
KAKA'AKO COMMUNITY DEVELOPMENT DISTRICT
IMPROVEMENT DISTRICT 9
ILALO STREET IMPROVEMENTS

PAVERTILE LAYOUT-3 & DETAILS

ENGINEER: LSY — CHECKED BY: GHH
DRAFTSMAN: NPC — DATE: JANUARY 05, 2001

EXECUTIVE DIRECTOR, HAWAII COMMUNITY DEVELOPMENT AUTHORITY

FILE	POCKET	FOLDER	NO.

"RECORD DRAWINGS" C-33D SHEET 44 OF 140 SHEETS

SEE SHEET 44 NEW

DELETE

sheets-a3d.dwg 12-13-00 2:51:36 pm HST

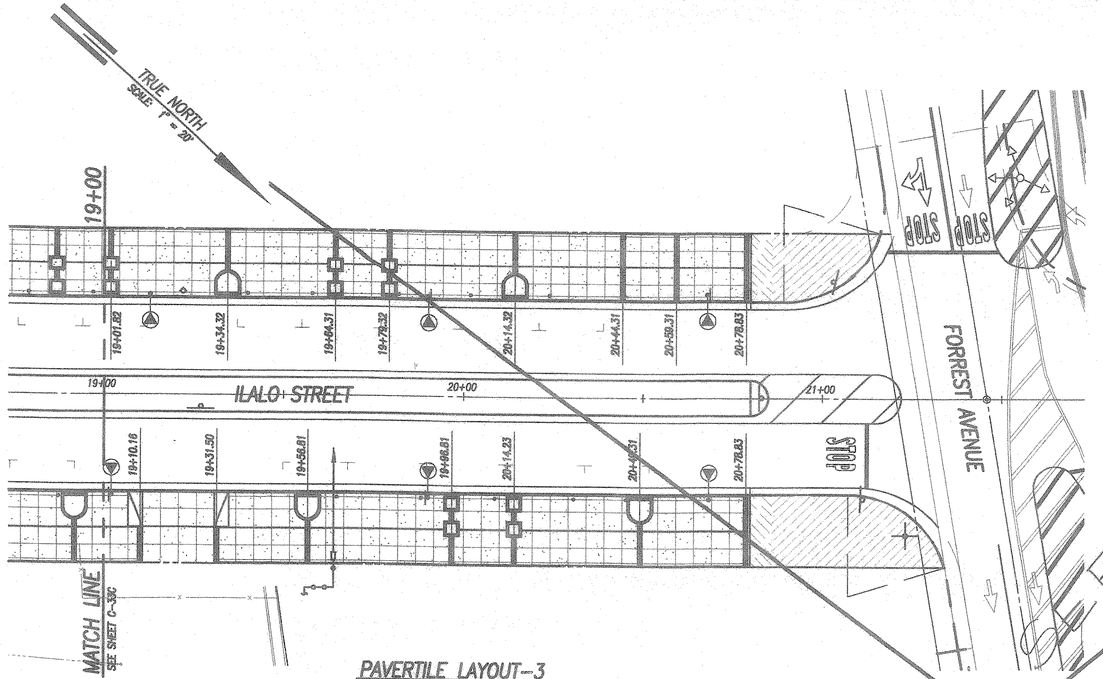

PAVERTILE LAYOUT-3
SCALE: 1" = 20'

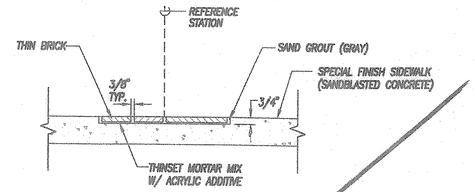

SECTION A-A
SCALE: 1 1/2" = 1'-0"

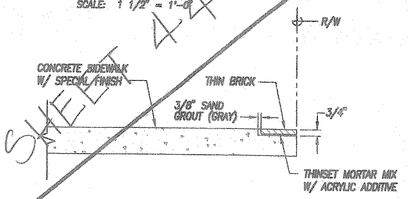

SECTION B-B
SCALE: 1 1/2" = 1'-0"

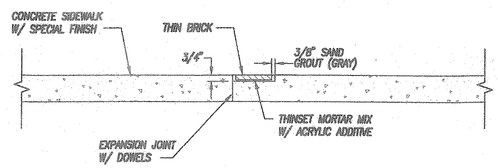

SECTION C-C
SCALE: 1 1/2" = 1'-0"

SEE NEW SHEET 44

NOTES:

1. ALL PAVERTILES SHALL BE 4"W x 8"L x 1/2"T THIN BRICK MEDIUM IRONSPOT #46 COLOR WITH WIRECUT TEXTURE (ENDICOTT CLAY PRODUCTS OR EQUAL).
2. CONCRETE SURFACES SHALL BE CLEAN AND FREE OF DUST AND DEBRIS PRIOR TO PLACEMENT OF THIN BRICKS.
3. THIN BRICKS SHALL BE SET WITH TOPS FLUSH WITH THE SIDEWALKS.
4. EVERY THIRD TRANSVERSE SCORELINE SHALL BE AN EXPANSION JOINT W/ DOWELS. ALL OTHERS SHALL BE CONTRACTION JOINTS.
5. WHERE EVER ANY JOINT CROSSES A PAVERTILE, THE TILE SHALL BE CUT ALONG THE JOINT ACCORDING TO THE MANUFACTURER'S RECOMMENDATIONS.
6. PAVERTILES SHALL NOT BE PLACED ON ELECTRICAL, TELEPHONE OR CABLE T.V. BOXES.

APPROVED:

M. [signature] 7/18/00
Chief, Civil Engineering Branch, DPP MT Date

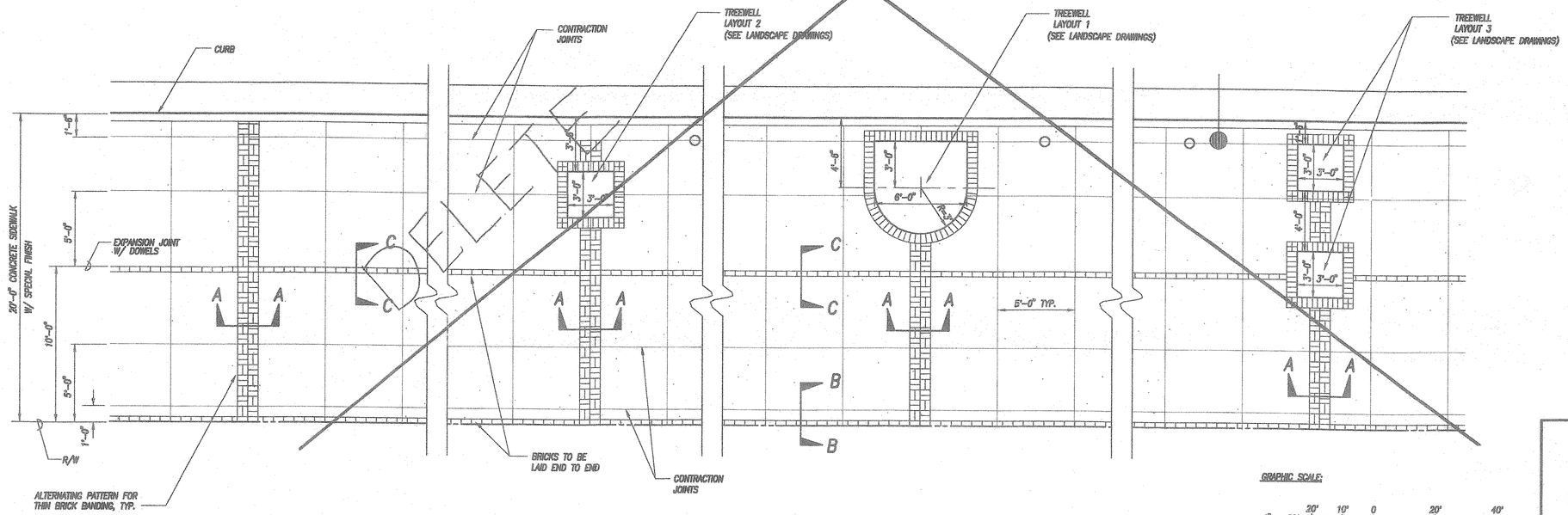

ENLARGED PLAN - PAVERTILE AND TREEWELLS
SCALE: 1/4" = 1'-0"

GRAPHIC SCALE:
1" = 20' 20' 10' 0 20' 40'
1/4" = 1'-0" 4' 0 4' 8'

REVISION	DATE	DESCRIPTION	MADE BY	APPROVED
1	1/5/01	DELETED SHEET, SEE REPLACEMENT SHEET 44	LSY	5/15/01 [illegible]

Planning - Engineering - Environmental Services - Photogrammetry - Surveying - Construction Management
R. M. TOWILL CORPORATION
808 842 1133 420 Waiakamilo Road Suite 411 Honolulu Hawaii 96817-4941

GREG H. HIYAKUMOTO LICENSED PROFESSIONAL ENGINEER No. 6562-C HAWAII, U.S.A.

THIS WORK WAS PREPARED BY ME OR UNDER MY SUPERVISION.
BY: [signature] 7/14/00
R.M. TOWILL CORPORATION

HAWAII COMMUNITY DEVELOPMENT AUTHORITY
STATE OF HAWAII
HONOLULU, HAWAII
KAKA'AKO COMMUNITY DEVELOPMENT DISTRICT
IMPROVEMENT DISTRICT 9
ILALO STREET IMPROVEMENTS

PAVERTILE LAYOUT-3 & DETAILS

ENGINEER: LSY CHECKED BY: GHH
DRAFTSMAN: NPC DATE: JULY 13, 2000
[signature]
EXECUTIVE DIRECTOR, HAWAII COMMUNITY DEVELOPMENT AUTHORITY

VOID 7/9/01

"RECORD DRAWINGS" C-33D SHEET 44 OF 140 SHEETS

FILE	POCKET	FOLDER	NO.

cover3.dwg 7-14-00 10:51:50 am EST

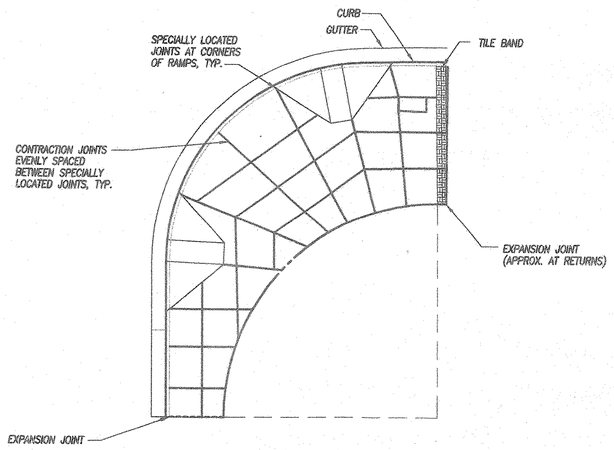

INTERSECTION CORNER, TYP.
SCALE: 1" = 10'

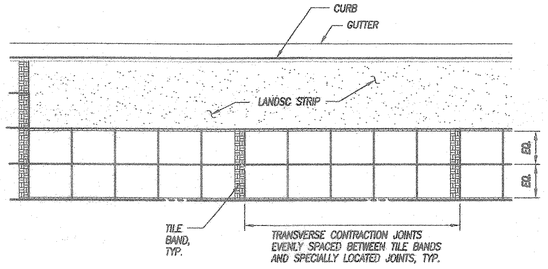

(AHUI ST. TO OHE ST.)
10' SIDEWALK, TYP.
SCALE: 1" = 10'

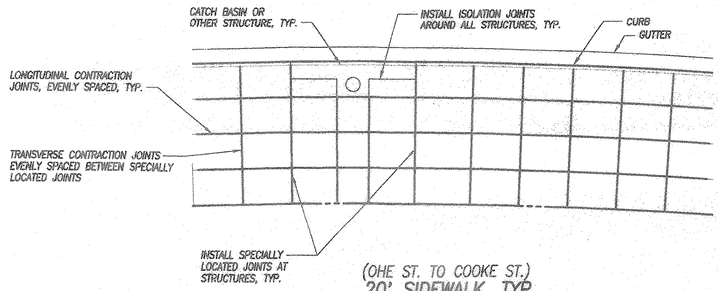

(OHE ST. TO COOKE ST.)
20' SIDEWALK, TYP.
SCALE: 1" = 10'

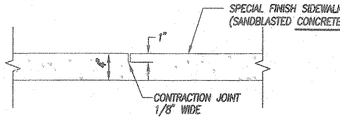

CONTRACTION JOINT IN CONCRETE SIDEWALK, TYP.
SCALE: 1" = 10'

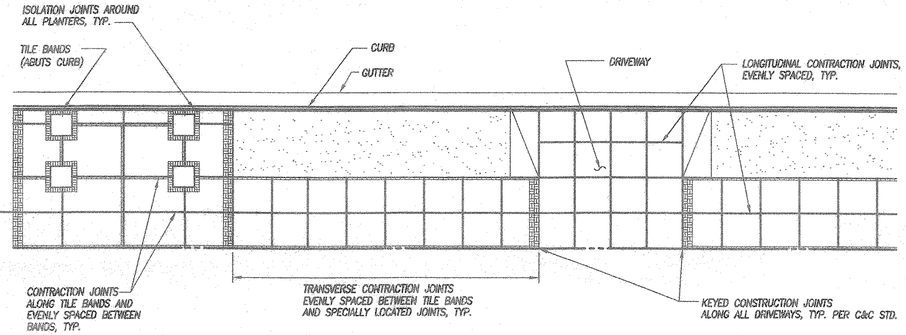

(COOKE ST. TO FORREST AVE.)
PLANTER SIDEWALK AT DRIVEWAY
SCALE: 1" = 10'

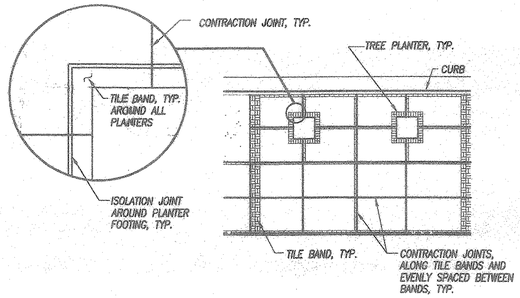

(COOKE ST. TO FORREST AVE.)
PLANTER SIDEWALK
SCALE: 1" = 10'

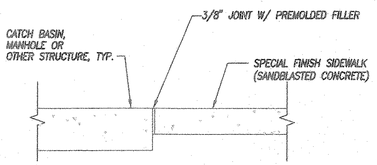

ISOLATION JOINT, TYP.
SCALE: 1" = 10'

NOTE: INSTALL 3/8" EXPANSION JOINTS WITH PREMOLDED FILLER AT 100 FEET MAX. SPACING AND APPROX. AT CURB RETURNS

APPROVED:

M. [illegible] 10/29/01
Chief, Civil Engineering Branch, DPP Date

REVISION	DATE	DESCRIPTION	MADE BY	APPROVED
4	7/9/01	NEW SHEET, REPLACES SHEET 44	LSY	

Planning - Engineering - Environmental Services - Photogrammetry - Surveying - Construction Management
R. M. TOWILL CORPORATION
808 842 1133 420 Waiakamilo Road Suite 411 Honolulu, Hawaii 96817-4941

GREG H. HIYAKUMOTO LICENSED PROFESSIONAL ENGINEER No. 6662-C HAWAII, U.S.A.

THIS WORK WAS PREPARED BY ME OR UNDER MY SUPERVISION.
BY: [signature] 10/29/01
R. M. TOWILL CORPORATION

HAWAII COMMUNITY DEVELOPMENT AUTHORITY
STATE OF HAWAII
HONOLULU, HAWAII

KAKA'AKO COMMUNITY DEVELOPMENT DISTRICT
IMPROVEMENT DISTRICT 9
ILALO STREET IMPROVEMENTS

PAVERTILE LAYOUT DETAILS

ENGINEER: GHH
DRAFTSMAN: SF
CHECKED BY: GHH
DATE: OCTOBER 15, 2001

EXECUTIVE DIRECTOR, HAWAII COMMUNITY DEVELOPMENT AUTHORITY

FILE	POCKET	FOLDER	NO.

"RECORD DRAWINGS" C-33E SHEET 44A OF 140 SHEETS

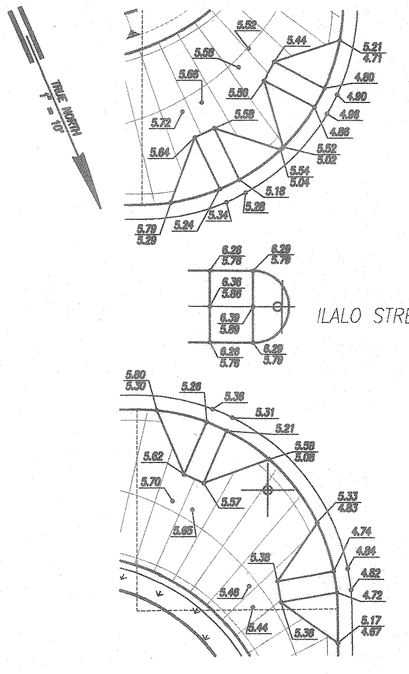

INTERSECTION OF ILALO & KOULA STREETS

SCALE: 1" = 10'

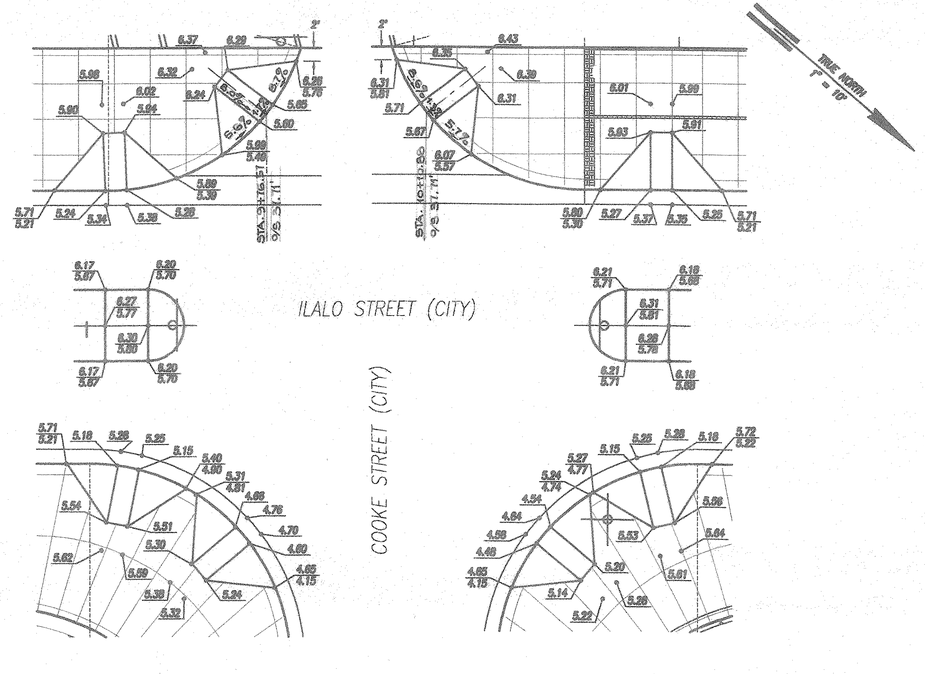

INTERSECTION OF ILALO & COOKE STREETS

SCALE: 1" = 10'

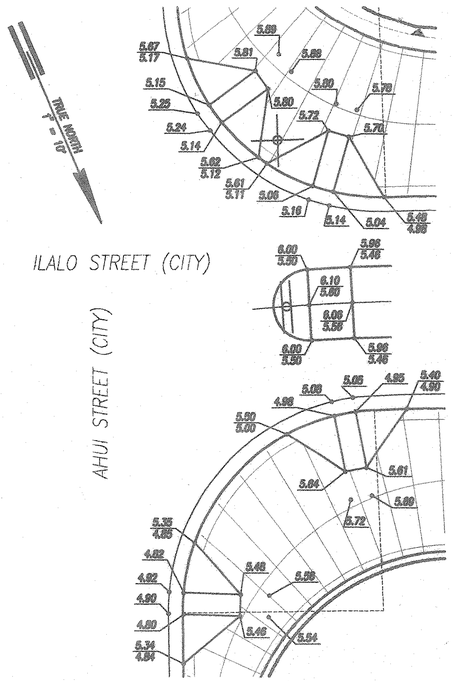

INTERSECTION OF ILALO & AHUI STREETS

SCALE: 1" = 10'

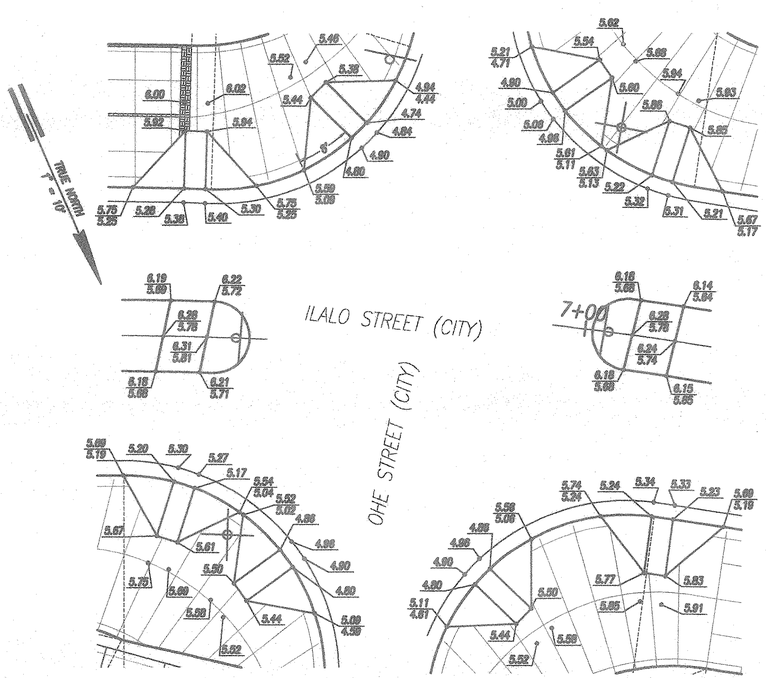

INTERSECTION OF ILALO & OHE STREETS

SCALE: 1" = 10'

APPROVED: DATE: 5/15/01

Chief, Civil Engineering Branch, DPP

1" = 10' (10' 5' 0 10' 20')

REVISION	DATE	DESCRIPTION	MADE BY	APPROVED
1	4/11/01	NEW SHEET	LSY	

R. M. TOWILL CORPORATION
808 842 1133 420 Waiakamilo Road Suite 411 Honolulu Hawaii 96817-4941
Planning – Engineering – Environmental Services – Photogrammetry – Surveying – Construction Management

GREG H. HIYAKUMOTO LICENSED PROFESSIONAL ENGINEER No. 8662-C HAWAII, U.S.A.

THIS WORK WAS PREPARED BY ME OR UNDER MY SUPERVISION.

BY: R. M. TOWILL CORPORATION 4/30/01

HAWAII COMMUNITY DEVELOPMENT AUTHORITY
STATE OF HAWAII
HONOLULU, HAWAII

KAKA'AKO COMMUNITY DEVELOPMENT DISTRICT
IMPROVEMENT DISTRICT 9
ILALO STREET IMPROVEMENTS

CURB RAMP DETAILS-1

ENGINEER: LSY CHECKED BY: GHH
DRAFTSMAN: LSY DATE: APRIL 11, 2001

EXECUTIVE DIRECTOR, HAWAII COMMUNITY DEVELOPMENT AUTHORITY

"RECORD DRAWINGS" C-33F SHEET 44B OF 140 SHEETS

FILE	POCKET	FOLDER	NO.

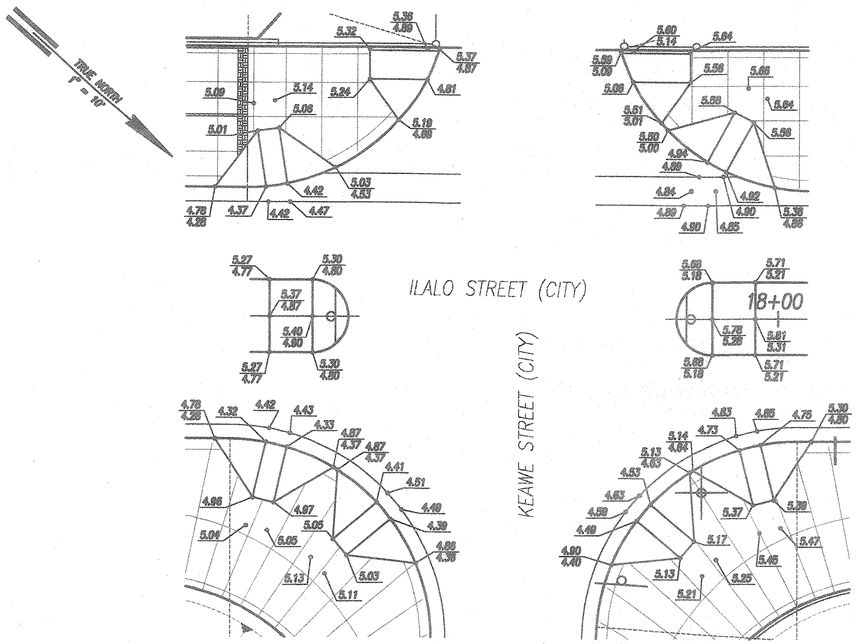

INTERSECTION OF ILALO & KEAWE STREETS

SCALE: 1" = 10'

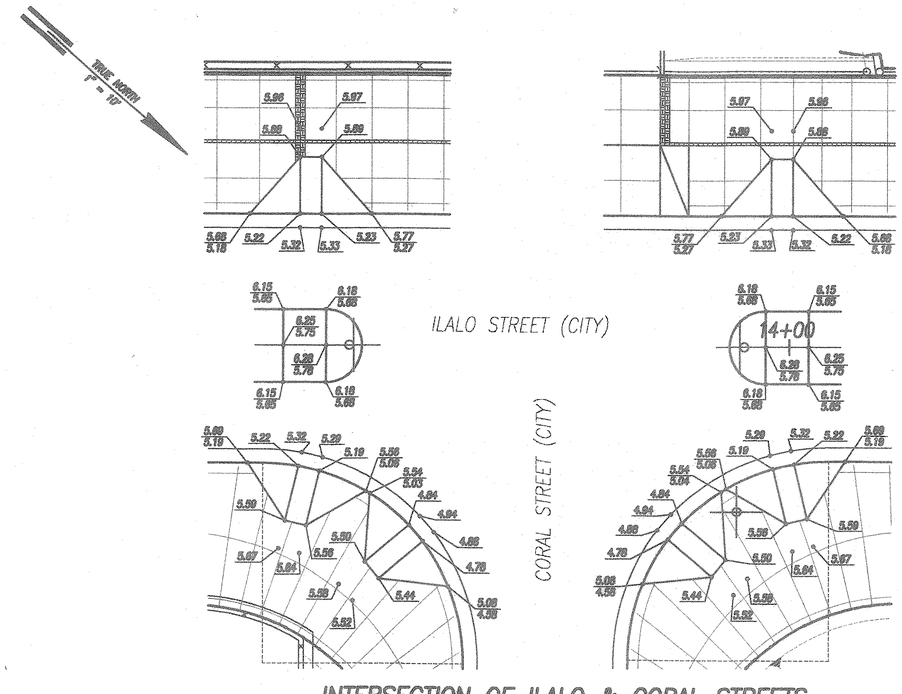

INTERSECTION OF ILALO & CORAL STREETS

SCALE: 1" = 10'

APPROVED: _____ DATE: 5/15/01

Chief, Civil Engineering Branch, DPP

1" = 10' (10' 5' 0 10' 20')

GREG H. HIYAKUMOTO — LICENSED PROFESSIONAL ENGINEER — No. 6662-C — HAWAII, U.S.A.

THIS WORK WAS PREPARED BY ME OR UNDER MY SUPERVISION.

BY: _____ 4/30/01
R/M. TOWILL CORPORATION

REVISION	DATE	DESCRIPTION	MADE BY	APPROVED
1	4/11/01	NEW SHEET	LSY	

R. M. TOWILL CORPORATION
Planning – Engineering – Environmental Services – Photogrammetry – Surveying – Construction Management
808 842 1133 420 Waiakamilo Road Suite 411 Honolulu Hawaii 96817-4941

HAWAII COMMUNITY DEVELOPMENT AUTHORITY
STATE OF HAWAII
HONOLULU, HAWAII

KAKA'AKO COMMUNITY DEVELOPMENT DISTRICT
IMPROVEMENT DISTRICT 9
ILALO STREET IMPROVEMENTS

CURB RAMP DETAILS–2

ENGINEER: LSY CHECKED BY: GHH
DRAFTSMAN: LSY DATE: APRIL 11, 2001

EXECUTIVE DIRECTOR, HAWAII COMMUNITY DEVELOPMENT AUTHORITY

"RECORD DRAWINGS" C-336 SHEET 44C OF 140 SHEETS

FILE	POCKET	FOLDER	NO.

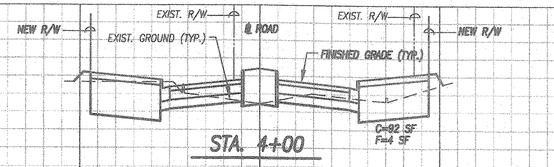

STA. 4+00

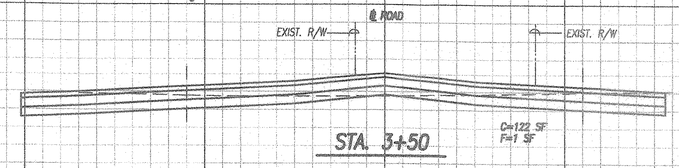

STA. 3+50

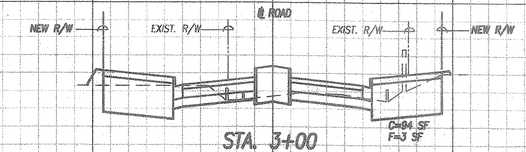

STA. 3+00

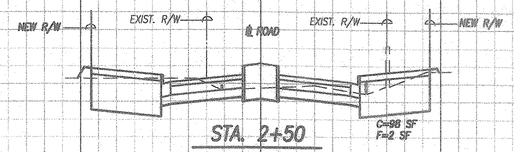

STA. 2+50

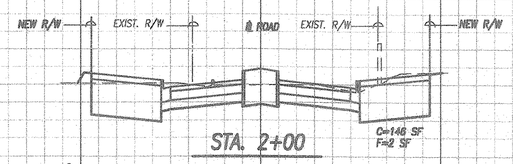

STA. 2+00

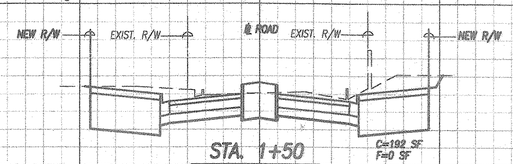

STA. 1+50

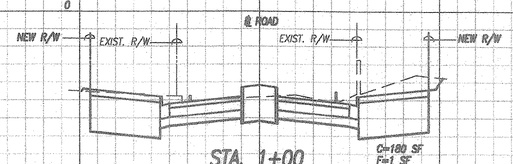

STA. 1+00

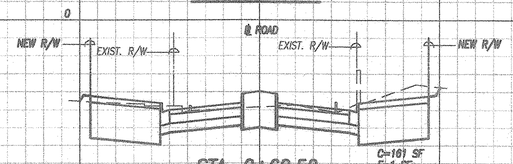

STA. 0+62.52

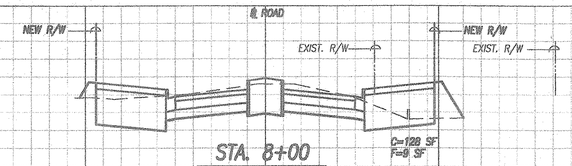

STA. 8+00

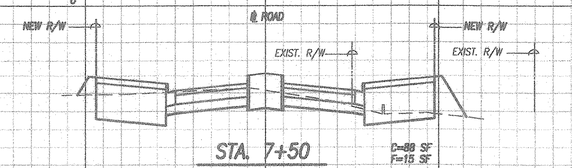

STA. 7+50

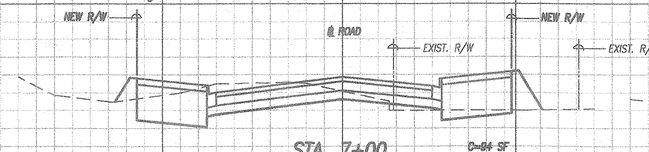

STA. 7+00

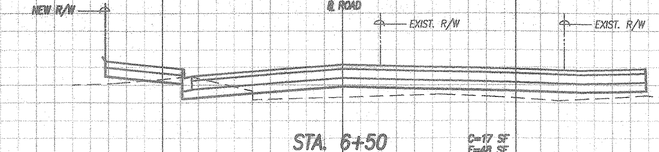

STA. 6+50

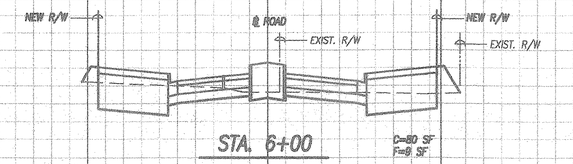

STA. 6+00

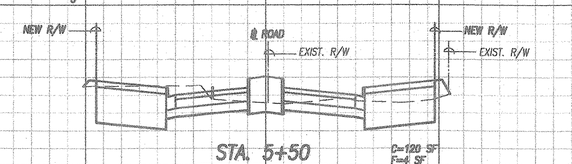

STA. 5+50

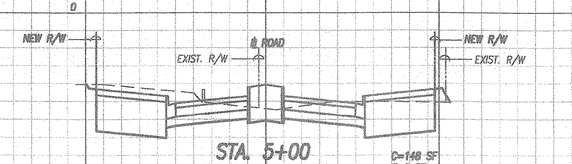

STA. 5+00

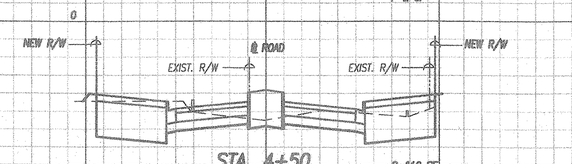

STA. 4+50

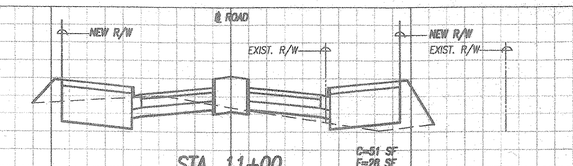

STA. 11+00

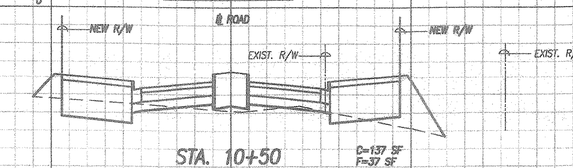

STA. 10+50

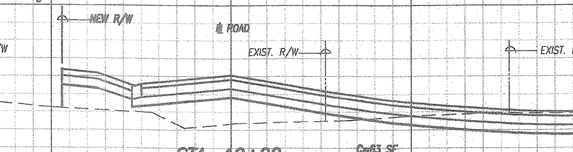

STA. 10+00

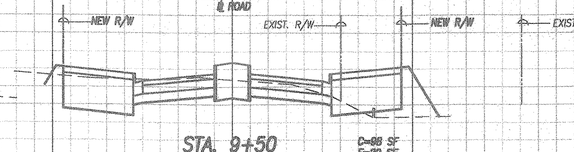

STA. 9+50

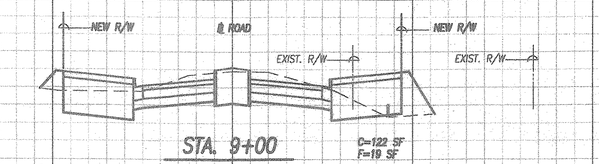

STA. 9+00

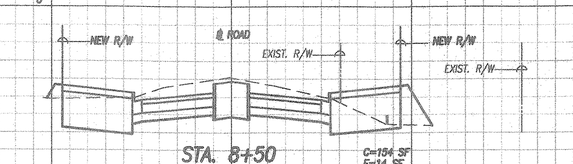

STA. 8+50

EARTHWORK SUMMARY
FOR PERMIT PURPOSES ONLY
AREA TO BE GRADED= 7.75 Ac.
EXCAVATION= 13,700 Cu. Yd.
EMBANKMENT= 1,550 Cu. Yd.

APPROVED: DATE: 7/18/00
Chief, Civil Engineering Branch, DPP

REVISION	DATE	DESCRIPTION	MADE BY	APPROVED

Planning – Engineering – Environmental Services – Photogrammetry – Surveying – Construction Management
R. M. TOWILL CORPORATION
808 842 1133 420 Waiakamilo Road Suite 411 Honolulu Hawaii 96817-4941

GRAPHIC SCALES:
1"=20' 20 0 20 40
1"=4' 4 0 4 8
SCALE IN FEET

GREG H. HIYAKUMOTO LICENSED PROFESSIONAL ENGINEER No. 6662-C HAWAII, U.S.A.

THIS WORK WAS PREPARED BY ME OR UNDER MY SUPERVISION.
BY: 7/14/00
R/M. TOWILL CORPORATION

HAWAII COMMUNITY DEVELOPMENT AUTHORITY
STATE OF HAWAII
HONOLULU, HAWAII
KAKA'AKO COMMUNITY DEVELOPMENT DISTRICT
IMPROVEMENT DISTRICT 9
ILALO STREET IMPROVEMENTS

CROSS SECTIONS-1

ENGINEER: LSY CHECKED BY: GHH
DRAFTSMAN: BEY DATE: JULY 13, 2000

EXECUTIVE DIRECTOR, HAWAII COMMUNITY DEVELOPMENT AUTHORITY

FILE	POCKET	FOLDER	NO.

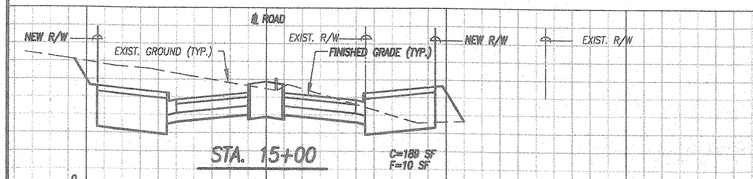

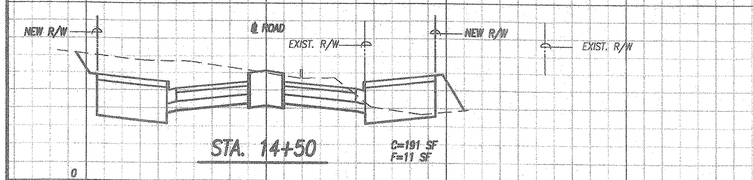

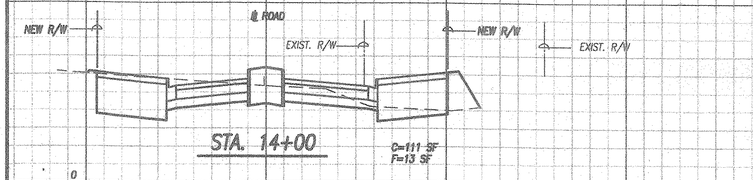

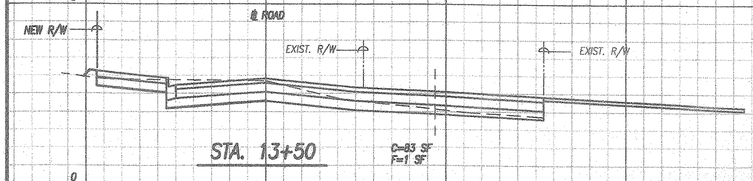

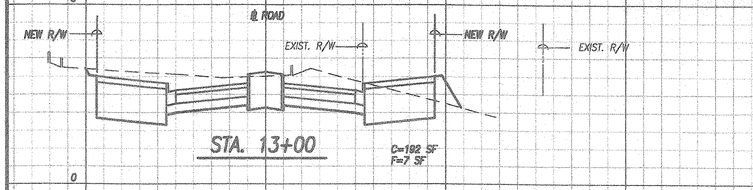

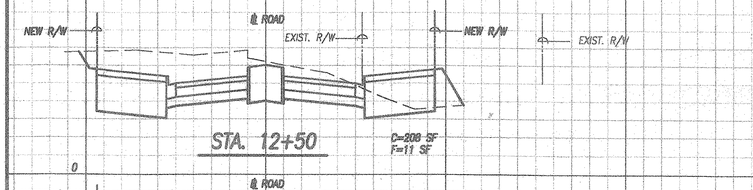

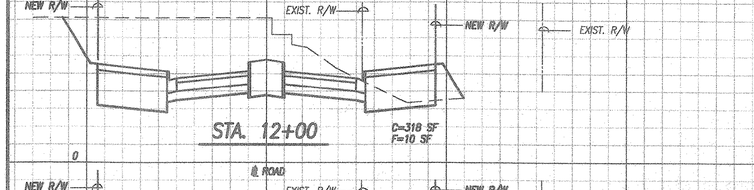

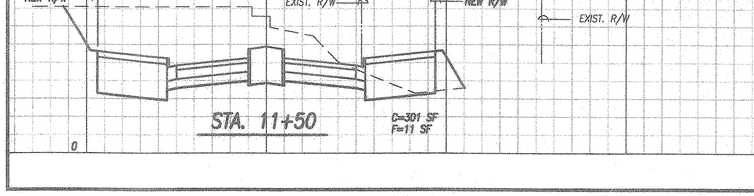

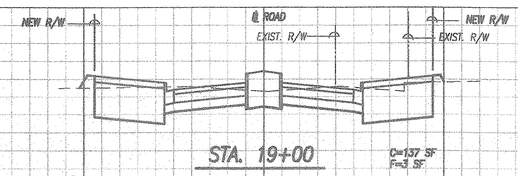

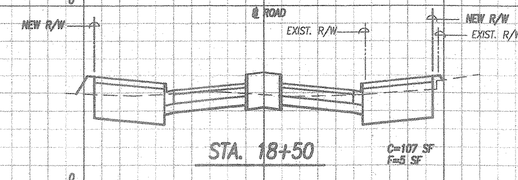

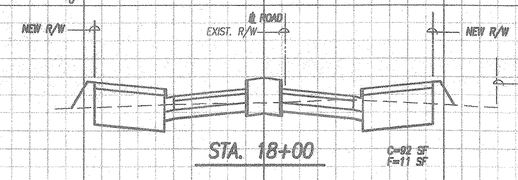

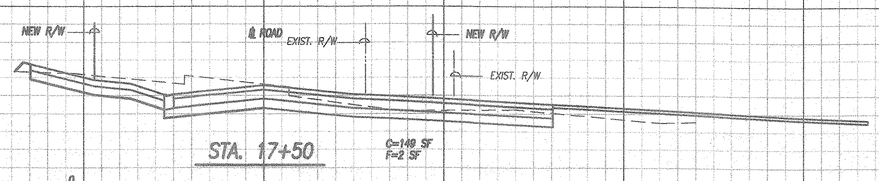

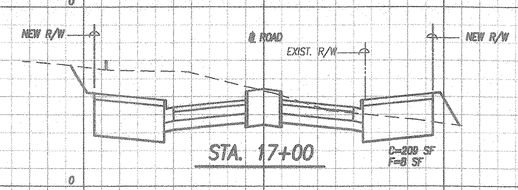

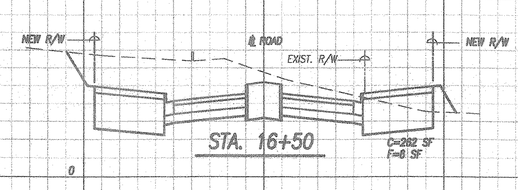

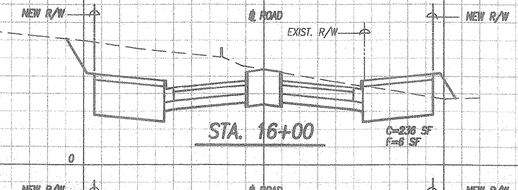

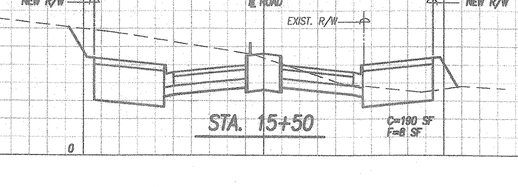

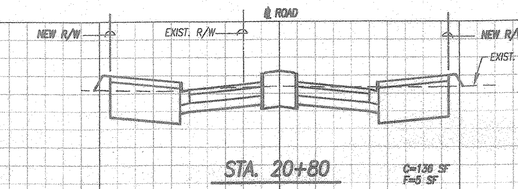

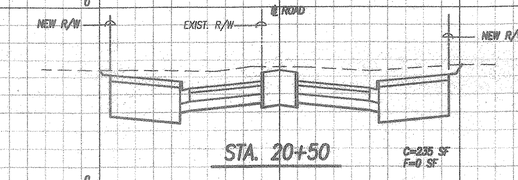

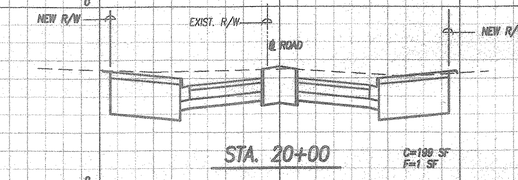

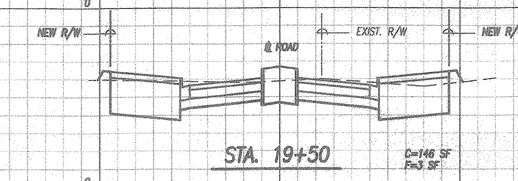

GRAPHIC SCALES:

1"=20' 20 0 20 40

1"=4' 4 0 4 8

SCALE IN FEET

THIS WORK WAS PREPARED BY ME OR UNDER MY SUPERVISION.

BY: _____ 7/14/00
R. M. TOWILL CORPORATION

GREG H. HIYAKUMOTO
LICENSED PROFESSIONAL ENGINEER
No. 6662-C
HAWAII, U.S.A.

APPROVED: _____ DATE: 7/18/00
Chief, Civil Engineering Branch, DPP

REVISION	DATE	DESCRIPTION	MADE BY	APPROVED

Planning – Engineering – Environmental Services – Photogrammetry – Surveying – Construction Management
R. M. TOWILL CORPORATION
808 842 1133 420 Waiakamilo Road Suite 411 Honolulu Hawaii 96817-4941

HAWAII COMMUNITY DEVELOPMENT AUTHORITY
STATE OF HAWAII
HONOLULU, HAWAII

KAKA'AKO COMMUNITY DEVELOPMENT DISTRICT
IMPROVEMENT DISTRICT 9
ILALO STREET IMPROVEMENTS

CROSS SECTIONS-2

ENGINEER: LSY CHECKED BY: GHH
DRAFTSMAN: BEY DATE: JULY 13, 2000

EXECUTIVE DIRECTOR, HAWAII COMMUNITY DEVELOPMENT AUTHORITY

FILE	POCKET	FOLDER	NO.

UNIFIED SOIL CLASSIFICATION SYSTEM (USCS)

MAJOR DIVISIONS			USCS	TYPICAL DESCRIPTIONS
COARSE-GRAINED SOILS (MORE THAN 50% OF MATERIAL RETAINED ON NO. 200 SIEVE)	GRAVELS (MORE THAN 50% OF COARSE FRACTION RETAINED ON NO. 4 SIEVE)	CLEAN GRAVELS (LESS THAN 5% FINES)	GW	WELL-GRADED GRAVELS, GRAVEL-SAND MIXTURES, LITTLE OR NO FINES
			GP	POORLY-GRADED GRAVELS, GRAVEL-SAND MIXTURES, LITTLE OR NO FINES
		GRAVELS WITH FINES (MORE THAN 12% FINES)	GM	SILTY GRAVELS, GRAVEL-SAND-SILT MIXTURES
			GC	CLAYEY GRAVELS, GRAVEL-SAND-SILT MIXTURES
	SANDS (50% OR MORE OF COARSE FRACTION PASSING THROUGH NO. 4 SIEVE)	CLEAN SANDS (LESS THAN 5% FINES)	SW	WELL-GRADED SANDS, GRAVELLY SANDS, LITTLE OR NO FINES
			SP	POORLY-GRADED SANDS, GRAVELLY SANDS, LITTLE OR NO FINES
		SANDS WITH FINES (MORE THAN 12% FINES)	SM	SILTY SANDS, SAND-SILT MIXTURES
			SC	CLAYEY SANDS, SAND-CLAY MIXTURES
FINE-GRAINED SOILS (50% OR MORE OF MATERIAL PASSING THROUGH NO. 200 SIEVE)	SILTS AND CLAYS (LIQUID LIMIT LESS THAN 50)		ML	INORGANIC SILTS AND VERY FINE SANDS, ROCK FLOUR, SILTY OR CLAYEY FINE SANDS OR CLAYEY SILTS WITH SLIGHT PLASTICITY
			CL	INORGANIC CLAYS OF LOW TO MEDIUM PLASTICITY, GRAVELLY CLAYS, SANDY CLAYS, SILTY CLAYS, LEAN CLAYS
			OL	ORGANIC SILTS AND ORGANIC SILTY CLAYS OF LOW PLASTICITY
	SILTS AND CLAYS (LIQUID LIMIT 50 OR MORE)		MH	INORGANIC SILT, MICACEOUS OR DIATOMACEOUS FINE SAND OR SILTY SOILS
			CH	INORGANIC CLAYS OF HIGH PLASTICITY
			OH	ORGANIC CLAYS OF MEDIUM TO HIGH PLASTICITY, ORGANIC SILTS
HIGHLY ORGANIC SOILS			PT	PEAT, HUMUS, SWAMP SOILS WITH HIGH ORGANIC CONTENTS

NOTE: DUAL SYMBOLS ARE USED TO INDICATE BORDERLINE SOIL CLASSIFICATIONS

LEGEND:

	2-INCH O.D. STANDARD PENETRATION TEST	LL	LIQUID LIMIT
	3-INCH O.D. MODIFIED CALIFORNIA SAMPLE	PI	PLASTICITY INDEX
S	SHELBY TUBE SAMPLE	TV	TORVANE SHEAR (tsf)
	CORE SAMPLE	PEN	POCKET PENETROMETER (tsf)
REC	CORE RECOVERY		WATER LEVEL OBSERVED IN BORING
RQD	ROCK QUALITY DESIGNATION	G	GRAB SAMPLE

CW Associates INC. dba GEOLABS-HAWAII Geology Soils and Foundation Engineering	BORING LOG LEGEND KAKAAKO COMMUNITY DEVELOPMENT DIST. ILALO STREET IMPROVEMENTS HONOLULU, OAHU, HAWAII	PLATE A
WORK ORDER NO. 3933-10 Mar 99		

Date Started: 6/15/98 | Drill Rig: CME-75
Date Completed: 6/15/98 | Drilling Method: H.S. Auger (6.25")
Logged By: J. Chen | Driving Energy: 140 lb. wt., 30 in. drop
Total Depth: 51.5 feet

Depth, ft	Sample	Penetr. Resist. Blows/ft.	Dry Density pcf	Moisture Content %	Compress. Strength tsf	Other	Data	Pen. tsf	DESCRIPTION
									Approximate Surface Elevation (ft): 5.3*
0									2-inch ASPHALT CONCRETE
		10	78	24					Brown SILTY GRAVEL (GM) with sand, medium dense, moist (fill)
		6	76	45					Light brown SILTY SAND (SM), loose, moist (fill)
5		13	77	32					Light gray SANDY SILT (ML), medium stiff, moist
									Tannish white SILTY SAND (SM) with coral gravel, medium dense
10		25		28					
15		Wt. of Rods		50					grades to very loose
20		Wt. of Rods		48					
25		4		33					
30		15		33					grades to medium dense
35									

CW ASSOCIATES, INC. dba GEOLABS-HAWAII Geology Soils and Foundation Engineering	LOG OF BORING 101 KAKAAKO COMMUNITY DEVELOPMENT DIST. ILALO STREET IMPROVEMENTS HONOLULU, OAHU, HAWAII	PLATE A-1.1
WORK ORDER NO. 3933-10 TSK Mar 99		

Date Started: 6/9/98 | Drill Rig: CME-75
Date Completed: 6/9/98 | Drilling Method: H.S. Auger (6.25")
Logged By: J. Chen | Driving Energy: 140 lb. wt., 30 in. drop
Total Depth: 53.0 feet

Depth, ft	Sample	Penetr. Resist. Blows/ft.	Dry Density pcf	Moisture Content %	Compress. Strength tsf	Other	Data	Pen. tsf	DESCRIPTION
									Approximate Surface Elevation (ft): 4.6*
0									Brown SANDY GRAVEL (GM) with silt, dense, damp (fill)
		33		15					Yellowish brown SILTY SAND (SM), loose to medium dense, moist (fill)
5		2							Gray SILTY SAND (SM) with coral gravel, medium dense
10		38							
15		28		43					
20		23		54					grades to tannish white
25		11		49					Tannish gray SANDY SILT (ML), medium stiff
30		17		36					
35									

CW ASSOCIATES, INC. dba GEOLABS-HAWAII Geology Soils and Foundation Engineering	LOG OF BORING 102 KAKAAKO COMMUNITY DEVELOPMENT DIST. ILALO STREET IMPROVEMENTS HONOLULU, OAHU, HAWAII	PLATE A-2.1
WORK ORDER NO. 3933-10 TSK Mar 99		

Depth, ft	Sample	Penetr. Resist. Blows/ft.	Dry Density pcf	Moisture Content %	Compress. Strength tsf	Other	Data	Pen. tsf	DESCRIPTION
									(Continued from previous plate)
35		35		33					Tannish white SILTY SAND (SM) with coral gravel, dense
40		50/.1' Ref.							Tannish brown SANDY CORAL GRAVEL (GW) with silt, dense
45		42/.5' +30/.4' Ref.		30					
50		21		21					grades to medium dense
55									Boring terminated at 51.5 feet
60									Groundwater level at: Depth 5.3 ft. Hours 1510 Date 6/15/98
65									* Elevations estimated from preliminary plans provided by R.M. Towill Corporation on Feb. 3, 1999.
70									
75									

CW ASSOCIATES, INC. dba GEOLABS-HAWAII Geology Soils and Foundation Engineering	LOG OF BORING 101 KAKAAKO COMMUNITY DEVELOPMENT DIST. ILALO STREET IMPROVEMENTS HONOLULU, OAHU, HAWAII	PLATE A-1.2
WORK ORDER NO. 3933-10 TSK Mar 99		

Depth, ft	Sample	Penetr. Resist. Blows/ft.	Dry Density pcf	Moisture Content %	Compress. Strength tsf	Other	Data	Pen. tsf	DESCRIPTION
									(Continued from previous plate)
35		4		50					Tannish gray SANDY SILT (ML), soft to medium stiff
40		3/1.5'		58					Gray SANDY SILT (MH) with clay, very soft to soft
45		3	65	58					
50		50/.5' +35/.1' Ref. 94	67	50 41					Black SILTY SAND (SM), dense
55									Brown SILTY CORAL GRAVEL (GM), dense
60									Boring terminated at 53 feet
65									Groundwater level at: Depth 4.4 ft. Hours 1700 Date 6/9/98
70									
75									

CW ASSOCIATES, INC. dba GEOLABS-HAWAII Geology Soils and Foundation Engineering	LOG OF BORING 102 KAKAAKO COMMUNITY DEVELOPMENT DIST. ILALO STREET IMPROVEMENTS HONOLULU, OAHU, HAWAII	PLATE A-2.2
WORK ORDER NO. 3933-10 TSK Mar 99		

GEOTECHNICAL NOTES:

1. A geotechnical engineering report entitled "Geotechnical Engineering Exploration, Kaka'ako Community Development District, Improvement District 9, Ilalo Street Improvements, Honolulu, Oahu Hawaii" dated June 18, 1999 has been prepared by Geolabs-Hawaii. A copy of the report is on file at the office of the Engineer for review by the Contractor.
2. For boring locations, see Sheets G-6 and G-7.
3. The information presented in the logs of borings depict the subsurface conditions encountered at that specified location and at the time of the field exploration only. Variations of subsoil and groundwater conditions from those depicted in the logs of borings may occur between and beyond the borings.
4. The penetration resistance shown on the logs of borings indicate the number of blows required for the specific sampler type used. The blow counts shown may need to be factored to obtain the Standard Penetration Test (SPT) blow counts.
5. Contractor shall be responsible for his own assumptions regarding the subsoil conditions.

REVISION	DATE	DESCRIPTION	MADE BY	APPROVED

Planning – Engineering – Environmental Services – Photogrammetry – Surveying – Construction Management
R. M. TOWILL CORPORATION
808 842 1133 420 Waiakamilo Road Suite 411 Honolulu Hawaii 96817-4941

GEOLABS—HAWAII
2005 KALIHI STREET
HONOLULU, HAWAII 96819

ROBIN M. LIM
LICENSED PROFESSIONAL ENGINEER
No. 8436-C
HAWAII, U.S.A.

THIS WORK WAS PREPARED BY ME OR UNDER MY SUPERVISION
SIGNATURE 7/26/00 DATE

HAWAII COMMUNITY DEVELOPMENT AUTHORITY
STATE OF HAWAII
HONOLULU, HAWAII
KAKA'AKO COMMUNITY DEVELOPMENT DISTRICT
IMPROVEMENT DISTRICT 9
ILALO STREET IMPROVEMENTS

BORING LOGS – 1

ENGINEER: RL | CHECKED BY: RL
DRAFTSMAN: | DATE: JULY 26, 2000

EXECUTIVE DIRECTOR, HAWAII COMMUNITY DEVELOPMENT AUTHORITY

"RECORD DRAWINGS" C-36 SHEET 47 OF 140 SHEETS

FILE	POCKET	FOLDER	NO.

Date Started: 6/10/98
Date Completed: 6/10/98
Logged By: J. Chen
Total Depth: 50.0 feet
Drill Rig: CME-75
Drilling Method: H.S. Auger (6.25")
Driving Energy: 140 lb. wt., 30 in. drop

Depth, ft	Sample	Pocketn. Resist. Blows/ft	Dry Density pcf	Moisture Content %	Compress. Strength tsf	Other	Data	Pen. tsf	DESCRIPTION
									Approximate Surface Elevation (ft): 3.5'
5		38	84	19					Brown and gray SILTY GRAVEL (GM) with sand, dense (fill)
		10							Brown SILTY SAND (SM) with traces of coral gravel, medium dense, damp (fill)
		22	85	27					Tannish white SILTY CORAL GRAVEL (GM) with sand, loose (fill)
10		2		50					Gray SILTY SAND (SM), medium dense
									Gray SILTY CORAL GRAVEL (GM) with sand, very loose
15		3/1.5'		36					Gray SANDY SILT (ML), very soft
20		Wt. of Rods		41					
25		2		47					
30		36	80	40					grades with shells, stiff to medium stiff
35									

CW ASSOCIATES, INC. dba
GEOLABS-HAWAII
Geology Soils and Foundation Engineering

LOG OF BORING 103
KAKA'AKO COMMUNITY DEVELOPMENT DIST.
ILALO STREET IMPROVEMENTS
HONOLULU, OAHU, HAWAII

PLATE A-3.1

WORK ORDER NO. 3933-10 TSK Mar 99

Date Started: 6/9/98
Date Completed: 6/9/98
Logged By: J. Chen
Total Depth: 51.0 feet
Drill Rig: CME-75
Drilling Method: H.S. Auger (6.25")
Driving Energy: 140 lb. wt., 30 in. drop

Depth, ft	Sample	Pocketn. Resist. Blows/ft	Dry Density pcf	Moisture Content %	Compress. Strength tsf	Other	Data	Pen. tsf	DESCRIPTION
									Approximate Surface Elevation (ft): 4.3'
		20/.5' +20/.0'		15					2-inch ASPHALT CONCRETE
5		21	85	35					Yellowish brown SANDY GRAVEL (GW), dense, damp (fill)
									REFUSE FILL (glass, plastic, rubber, and metal fragments)
10		1							Gray SILTY SAND (SM) with coral gravel, medium dense
									grades to very loose
15		Wt. of Rods		38					
20		Wt. of Rods		39					Gray SANDY SILT (ML), very soft
		Wt. of Rods		39			LL=25 PI=1		
25		4	75	50					Gray SILTY SAND (SM), very loose
30		17	70	41					grades with shells, medium dense
35									Gray SANDY SILT (ML), very soft

CW ASSOCIATES, INC. dba
GEOLABS-HAWAII
Geology Soils and Foundation Engineering

LOG OF BORING 104
KAKA'AKO COMMUNITY DEVELOPMENT DIST.
ILALO STREET IMPROVEMENTS
HONOLULU, OAHU, HAWAII

PLATE A-4.1

WORK ORDER NO. 3933-10 TSK Mar 99

Date Started: 6/8/98
Date Completed: 6/8/98
Logged By: J. Chen
Total Depth: 62.0 feet
Drill Rig: CME-75
Drilling Method: H.S. Auger (6.25")
Driving Energy: 140 lb. wt., 30 in. drop

Depth, ft	Sample	Pocketn. Resist. Blows/ft	Dry Density pcf	Moisture Content %	Compress. Strength tsf	Other	Data	Pen. tsf	DESCRIPTION
									Approximate Surface Elevation (ft): 5.5'
		60/.2' Ref.		12					3-inch ASPHALT CONCRETE
5		5	74	46				0.8	Brown SILTY GRAVEL (GM) with sand, very dense, very moist (fill)
		4	71	50				0.5	Light gray SANDY SILT (ML) with clay, soft
10		9	89	32					grades to gray
									Gray SILTY CORAL GRAVEL (GM) with sand, loose
15		4		31					
20		65	107	21					grades to dense
25		30		18					grades to medium dense
30		25		23					
35									

CW ASSOCIATES, INC. dba
GEOLABS-HAWAII
Geology Soils and Foundation Engineering

LOG OF BORING 105
KAKA'AKO COMMUNITY DEVELOPMENT DIST.
ILALO STREET IMPROVEMENTS
HONOLULU, OAHU, HAWAII

PLATE A-5.1

WORK ORDER NO. 3933-10 TSK Mar 99

Depth, ft	Sample	Pocketn. Resist. Blows/ft	Dry Density pcf	Moisture Content %	Compress. Strength tsf	Other	Data	Pen. tsf	DESCRIPTION
									(Continued from previous plate)
		2	63	56					Dark gray SANDY SILT (ML) with shells, soft
40		Wt. of Rods	66	58					
45		3	67	59					
50		30/.0'							Boring terminated at 50 feet
55									Groundwater level at: Depth 3.3 ft. Hours 1630 Date 6/10/98
60									
65									
70									
75									

CW ASSOCIATES, INC. dba
GEOLABS-HAWAII
Geology Soils and Foundation Engineering

LOG OF BORING 103
KAKA'AKO COMMUNITY DEVELOPMENT DIST.
ILALO STREET IMPROVEMENTS
HONOLULU, OAHU, HAWAII

PLATE A-3.2

WORK ORDER NO. 3933-10 TSK Mar 99

Depth, ft	Sample	Pocketn. Resist. Blows/ft	Dry Density pcf	Moisture Content %	Compress. Strength tsf	Other	Data	Pen. tsf	DESCRIPTION
									(Continued from previous plate)
		Wt. of Rods		50					Gray SANDY SILT (ML), very soft
40		4	66	59					
45		11	71	52					Black-brown SANDY SILT (ML) with organics, medium dense
50		83	84	32					grades to very dense
55									Boring terminated at 51 feet
60									Groundwater level at: Depth 4.2 ft. Hours 1240 Date 6/9/98; 3.4 ft. 1610 6/10/98
65									
70									
75									

CW ASSOCIATES, INC. dba
GEOLABS-HAWAII
Geology Soils and Foundation Engineering

LOG OF BORING 104
KAKA'AKO COMMUNITY DEVELOPMENT DIST.
ILALO STREET IMPROVEMENTS
HONOLULU, OAHU, HAWAII

PLATE A-4.2

WORK ORDER NO. 3933-10 TSK Mar 99

Depth, ft	Sample	Pocketn. Resist. Blows/ft	Dry Density pcf	Moisture Content %	Compress. Strength tsf	Other	Data	Pen. tsf	DESCRIPTION
									(Continued from previous plate)
		13/.5' +10/.1 Ref.		33					Black-gray SILTY SAND (SM) with gravel, medium dense to dense
40		95/.5' Ref.		23		RUN 1 REC=28%			Tannish white SILTY CORAL GRAVEL (GM) with sand, very dense
45						RUN 2 REC=13%			
50									Boring terminated at 52 feet
55									Groundwater level at: Depth 3.4 ft. Hours 1736 Date 6/8/98
60									
65									
70									
75									

CW ASSOCIATES, INC. dba
GEOLABS-HAWAII
Geology Soils and Foundation Engineering

LOG OF BORING 105
KAKA'AKO COMMUNITY DEVELOPMENT DIST.
ILALO STREET IMPROVEMENTS
HONOLULU, OAHU, HAWAII

PLATE A-5.2

WORK ORDER NO. 3933-10 TSK Mar 99

REVISION	DATE	DESCRIPTION	MADE BY	APPROVED

Planning – Engineering – Environmental Services – Photogrammetry – Surveying – Construction Management
R. M. TOWILL CORPORATION
808 842 1133 420 Waiakamilo Road Suite 411 Honolulu Hawaii 96817-4941

GEOLABS–HAWAII
2005 KALIHI STREET
HONOLULU, HAWAII 96819

ROBIN M. LIM
LICENSED PROFESSIONAL ENGINEER
No. 8436–C
HAWAII, U.S.A.

THIS WORK WAS PREPARED BY ME OR UNDER MY SUPERVISION
SIGNATURE 7/24/00 DATE

HAWAII COMMUNITY DEVELOPMENT AUTHORITY
STATE OF HAWAII
HONOLULU, HAWAII
KAKA'AKO COMMUNITY DEVELOPMENT DISTRICT
IMPROVEMENT DISTRICT 9
ILALO STREET IMPROVEMENTS

BORING LOGS – 2

ENGINEER: RL CHECKED BY: RL
DRAFTSMAN: DATE: JULY 26, 2000
EXECUTIVE DIRECTOR, HAWAII COMMUNITY DEVELOPMENT AUTHORITY

FILE	POCKET	FOLDER	NO.

"RECORD DRAWINGS" C-37 SHEET 48 OF 140 SHEETS

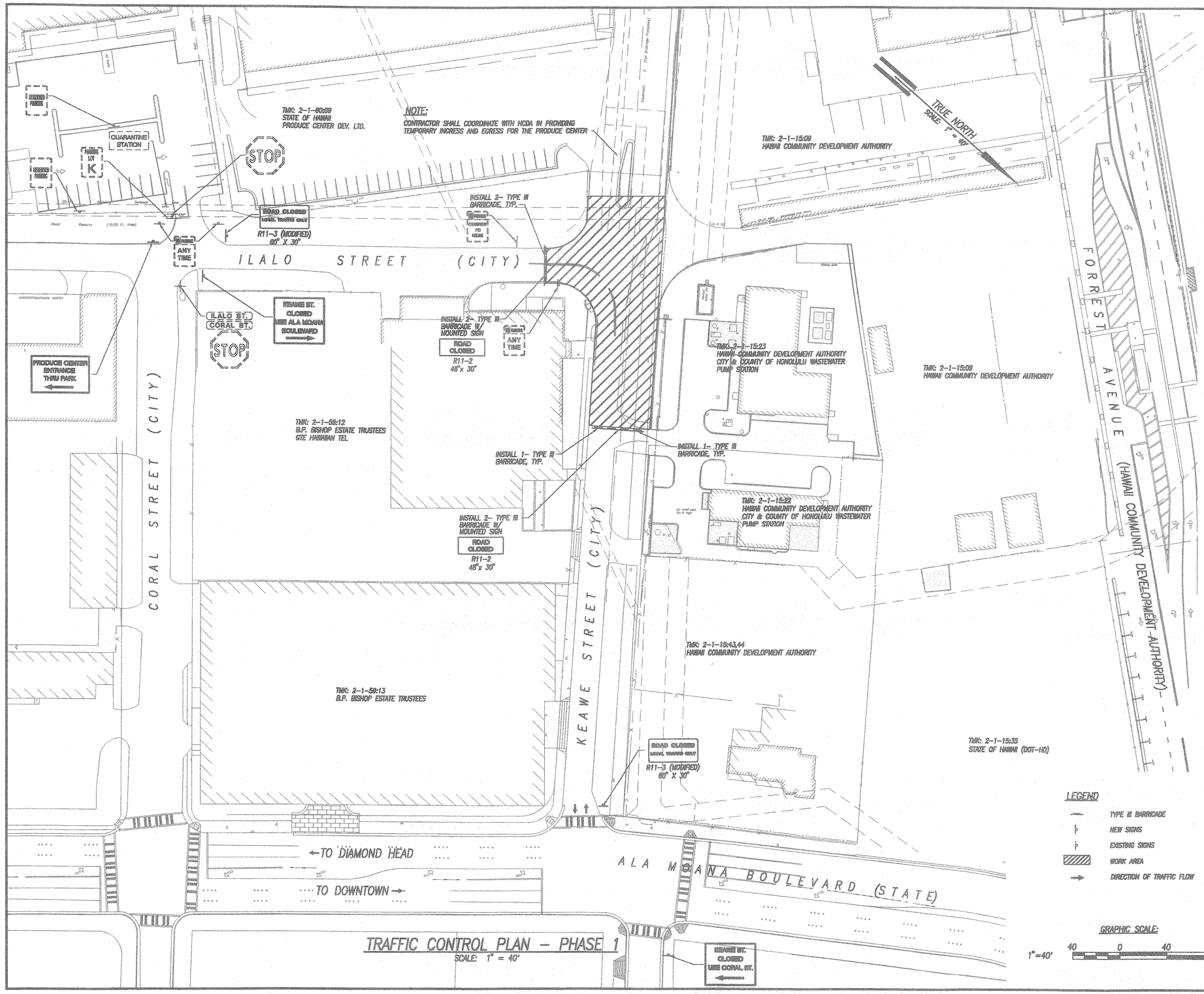

TRAFFIC CONTROL PLAN – PHASE 1
SCALE: 1" = 40'

GENERAL NOTES FOR TRAFFIC CONTROL PLAN

1. THE PERMITTEE SHALL MAKE MINOR ADJUSTMENTS AT INTERSECTIONS, DRIVEWAYS, BRIDGES, STRUCTURES, ETC., TO FIT FIELD CONDITIONS.
2. CONES OR DELINEATORS SHALL BE EXTENDED TO A POINT WHERE THEY ARE VISIBLE TO APPROACHING TRAFFIC.
3. TRAFFIC CONTROL DEVICES SHALL BE INSTALLED SUCH THAT THE SIGN OR DEVICE FARTHEST FROM THE WORK AREA SHALL BE PLACED FIRST. THE OTHERS SHALL THEN BE PLACED PROGRESSIVELY TOWARD THE WORK AREA.
4. REGULATORY AND WARNING SIGNS WITHIN THE CONSTRUCTION ZONE THAT ARE IN CONFLICT WITH THE TRAFFIC CONTROL PLANS SHALL BE REMOVED OR COVERED. ALL SIGNS SHALL BE RESTORED UPON COMPLETION OF THE WORK.
5. FLAGGERS AND/OR POLICE OFFICERS SHALL BE IN SIGHT OF EACH OTHER OR IN DIRECT COMMUNICATION AT ALL TIMES.
6. WHEN REQUIRED BY THE ISSUING OFFICE, THE PERMITTEE SHALL INSTALL A FLASHING ARROW SIGNAL WHETHER OR NOT SHOWN ON THE TRAFFIC CONTROL PLANS.
7. ALL TRAFFIC LANES SHALL BE A MINIMUM OF 10 FEET WIDE.
8. ALL CONSTRUCTION WARNING SIGNS SHALL BE PROMPTLY REMOVED OR COVERED WHENEVER THE MESSAGE IS NOT APPLICABLE OR NOT IN USE.
9. THE BACKS OF ALL SIGNS USED FOR TRAFFIC CONTROL SHALL BE APPROPRIATELY COVERED TO PRECLUDE THE DISPLAY OF INAPPLICABLE SIGN MESSAGES (I.E., WHEN SIGNS HAVE MESSAGES ON BOTH FACES).
10. AT THE END OF EACH DAY'S WORK OR AS SOON AS THE WORK IS COMPLETED, THE PERMITTEE SHALL REMOVE ALL TRAFFIC CONTROL DEVICES NO LONGER NEEDED TO PERMIT FREE AND SAFE PASSAGE OF PUBLIC TRAFFIC. REMOVAL SHALL BE IN THE REVERSE ORDER OF INSTALLATION.
11. REPLACE PERMANENT PAVEMENT MARKINGS AND TRAFFIC SIGNS UPON COMPLETION OF EACH PHASE OF WORK.
12. CONTRACTOR TO ENSURE THAT CONES WILL NOT BE BLOWN OVER OR DISPLACED. TYPE II BARRICADES WITH AMBER FLASHING LIGHTS SHALL BE USED AS SHOWN ON PLANS AND IN LIEU OF CONES FOR NIGHTTIME DELINEATION OF WORK AREA. TYPE II BARRICADES SHALL BE OFFSET TWO FEET FROM THE TRAVELWAY.
13. BUFFER AND TAPER AREAS ON APPROACH TO ANY WORK SITE SHALL BE KEPT CLEAR OF VEHICLES AND EQUIPMENT.
14. THE PERMITTEE SHALL CONTROL TRAFFIC GOING IN AND OUT OF DRIVEWAYS.
15. CONES AND DELINEATORS SHALL BE SPACED AT A MAXIMUM DISTANCE OF 25 FEET APART.
16. TEMPORARY PATHS SHALL BE PROVIDED TO FACILITATE SAFE PASSAGE OF PEDESTRIANS DURING CONSTRUCTION. PATHS SHALL BE 3' WIDE, PAVED OR STABILIZED AND PLACED CONFORMING TO ADA ACCESSIBILITY REQUIREMENTS.
17. REFLECTIVE PAVEMENT MARKERS OF THE APPLICABLE TYPE SHALL BE USED FOR ALL TEMPORARY STRIPING
18. CONTRACTOR SHALL COORDINATE WITH THE CITY DEPARTMENT OF TRANSPORTATION SERVICES AND STATE DEPARTMENT OF TRANSPORTATION FOR ANY TEMPORARY TRAFFIC SIGNAL AND INTERSECTION MODIFICATIONS.
19. TEMPORARY STREET LIGHTING SHALL BE PROVIDED TO REPLICATE EXISTING CONDITIONS WITHIN AFFECTED AREAS.
20. PORTABLE TRAFFIC BARRIERS SHALL BE USED AT LOCATIONS SHOWN ON PLANS AND IN LIEU OF CONES AND TYPE II BARRIERS IF THE LONGITUDINAL GRADE DIFFERENCE IS THREE INCHES OR GREATER. LONGITUDINAL GRADE DIFFERENCES SHALL BE BACKFILLED AT THE END OF EACH WORKDAY AT 3H:1V. BARRIERS SHALL BE CONCRETE AND/OR TRITON OR GUARDIAN, COMPLETE WITH END TREATMENT AND LIGHTING DEVICES. BARRIERS SHALL BE RELOCATED AS REQUIRED TO ACCOMMODATE TRAFFIC CONTROL PLAN PHASING. ALL END TREATMENTS SHALL BE TRITON, GUARDIAN OR SAND BARREL IMPACT ATTENUATORS. INSTALLATION SHALL CONFORM TO FHWA STANDARDS UNDER NCHRP 350 GUIDELINES. THE FIRST 20 FEET OF END TREATMENT DEVICES SHALL BE EQUIPPED WITH TYPE B FLASHING LIGHTS. TYPE C YELLOW STEADY BURNING LIGHTS SHALL BE USED WITHIN LANE TRANSITIONS. ALL OTHER BARRIERS SHALL BE RETROREFLECTORIZED. ALL END TREATMENT AND LIGHTING DEVICES SHALL BE STATE OF HAWAII D.O.T.-ACCEPTED.

NOTE ON PAVEMENT MARKERS, STRIPING AND MARKINGS:

UPON COMPLETION OF ALL WIDENING AND UTILITY IMPROVEMENTS, THE FINAL LAYER OF ASPHALT CONCRETE SHALL BE SPREAD AS SPECIFIED IN SECTION 02500, PAVING AND SURFACING, OF THE SPECIFICATIONS, ALONG THE ENTIRE LENGTH OF THE PROJECT BEGINNING AT THE ILALO STREET/AHUI STREET/WARD AVENUE INTERSECTION. PERMANENT PAVEMENT MARKERS, STRIPING AND MARKINGS SHALL BE INSTALLED AS SPECIFIED IN SECTION 02580, PAVEMENT MARKERS, STRIPING AND MARKINGS, OF THE SPECIFICATIONS.

Approved:

Chief, Traffic Review Branch, DPP — Date

LEGEND

- TYPE III BARRICADE
- NEW SIGNS
- EXISTING SIGNS
- WORK AREA
- DIRECTION OF TRAFFIC FLOW

GRAPHIC SCALE:

1"=40' — 40 0 40 80

REVISION	DATE	DESCRIPTION	MADE BY	APPROVED

Planning – Engineering – Environmental Services – Photogrammetry – Surveying – Construction Management
R. M. TOWILL CORPORATION
808 842 1133 420 Waiakamilo Road Suite 411 Honolulu Hawaii 96817-4941

GREG H. HIYAKUMOTO LICENSED PROFESSIONAL ENGINEER No. 6662-C HAWAII, U.S.A.

THIS WORK WAS PREPARED BY ME OR UNDER MY SUPERVISION.

BY: R. M. TOWILL CORPORATION

HAWAII COMMUNITY DEVELOPMENT AUTHORITY
STATE OF HAWAII
HONOLULU, HAWAII

KAKA'AKO COMMUNITY DEVELOPMENT DISTRICT

IMPROVEMENT DISTRICT 9

ILALO STREET IMPROVEMENTS

TRAFFIC CONTROL PLAN-1

ENGINEER: LSY/BN — CHECKED BY: GHH
DRAFTSMAN: BN — DATE: JULY 26, 2000

EXECUTIVE DIRECTOR, HAWAII COMMUNITY DEVELOPMENT AUTHORITY

FILE	POCKET	FOLDER	NO.

TRUE NORTH
SCALE: 1" = 40'

PARKING ANY TIME

STOP ALL WAY

DEPARTMENT OF AGRICULTURE ENTRANCE

RESERVED PARKING

QUARANTINE STATION

PARKING LOT K

TMK: 2-1-60:10
HAWAII COMMUNITY DEVELOPMENT AUTHORITY
DEPARTMENT OF AGRICULTURE

TMK: 2-1-60:09
STATE OF HAWAII
PRODUCE CENTER DEV. LTD.

ILALO STREET (CITY)

ROAD CLOSED
LOCAL TRAFFIC ONLY
R11-3 (MODIFIED)
60" X 30"

CORAL ST.
CLOSED
USE ALA MOANA
BOULEVARD

SPEED LIMIT 25

ONLY

ILALO ST.
COOKE ST.

INSTALL 2- TYPE III BARRICADE W/ MOUNTED SIGN
ROAD CLOSED
R11-2
48"x 30"

INSTALL 2- TYPE III BARRICADE, TYP.

ILALO ST.
CORAL ST.

TMK: 2-1-59:12
B.P. BISHOP ESTATE TRUSTEES
GTE HAWAIIAN TEL

COOKE STREET (CITY)

CORAL STREET (CITY)

TMK: 2-1-59:11
B.P. BISHOP ESTATE TRUSTEES
HONOLULU FORD, INC.

ROAD CLOSED
LOCAL TRAFFIC ONLY
R11-3 (MODIFIED)
60" X 30"

TMK: 2-1-59:13
B.P. BISHOP ESTATE TRUSTEES

DETOUR

TO DIAMOND HEAD

TO DOWNTOWN

ALA MOANA BOULEVARD (STATE)

TRAFFIC CONTROL PLAN - PHASE 2
SCALE: 1" = 40'

NOTES:
1. THE CONTRACTOR SHALL COORDINATE WITH HCDA FOR TEMPORARY PARKING FACILITIES.
2. FOR TRAFFIC CONTROL PLAN NOTES, SEE SHEET C-38.

TMK: 2-1-15:09
HAWAII COMMUNITY DEVELOPMENT AUTHORITY

INSTALL 2- TYPE III BARRICADE W/ MOUNTED SIGN
ROAD CLOSED
R11-2
48"x 30"

INSTALL 2- TYPE III BARRICADE, TYP.

ILALO STREET (CITY)

FORREST AVENUE

INSTALL 3- TYPE III BARRICADE W/ MOUNTED SIGN
ROAD CLOSED
R11-2
48"x 30"

TMK: 2-1-15:23
HAWAII COMMUNITY DEVELOPMENT AUTHORITY
CITY & COUNTY OF HONOLULU WASTEWATER PUMP STATION

200'

ROAD CLOSED AHEAD
CW 20-3
48"x 48"

TMK: 2-1-15:22
HAWAII COMMUNITY DEVELOPMENT AUTHORITY
CITY & COUNTY OF HONOLULU WASTEWATER PUMP STATION

ROAD WORK AHEAD
CW20-1Ad
48" x 48"

TMK: 2-1-15:35
STATE OF HAWAII (DOT-HD)

TMK: 2-1-15:43,44
HAWAII COMMUNITY DEVELOPMENT AUTHORITY

KEAWE STREET (CITY)

DETOUR

LEGEND
- TYPE III BARRICADE
- NEW SIGNS
- EXISTING SIGNS
- WORK AREA
- DIRECTION OF TRAFFIC FLOW

GRAPHIC SCALE:
40 0 40 80
1"=40'

Approved:

Chief, Traffic Review Branch, DPP — Date

REVISION	DATE	DESCRIPTION	MADE BY	APPROVED

Planning – Engineering – Environmental Services – Photogrammetry – Surveying – Construction Management
R. M. TOWILL CORPORATION
800 542 1133 420 Waiakamilo Road Suite 411 Honolulu Hawaii 96817-4941

GREG H. HIYAKUMOTO
LICENSED PROFESSIONAL ENGINEER
No. 6662-C
HAWAII, U.S.A.

THIS WORK WAS PREPARED BY ME OR UNDER MY SUPERVISION.
BY: _____ 4/26/00
R.M. TOWILL CORPORATION

HAWAII COMMUNITY DEVELOPMENT AUTHORITY
STATE OF HAWAII
HONOLULU, HAWAII
KAKA'AKO COMMUNITY DEVELOPMENT DISTRICT
IMPROVEMENT DISTRICT 9
ILALO STREET IMPROVEMENTS

TRAFFIC CONTROL PLAN-2

ENGINEER: LSY/BN
DRAFTSMAN: BN
CHECKED BY: GHH
DATE: JULY 26, 2000

EXECUTIVE DIRECTOR, HAWAII COMMUNITY DEVELOPMENT AUTHORITY

"RECORD DRAWINGS" C-39 SHEET 50 OF 140 SHEETS

FILE	POCKET	FOLDER	NO.

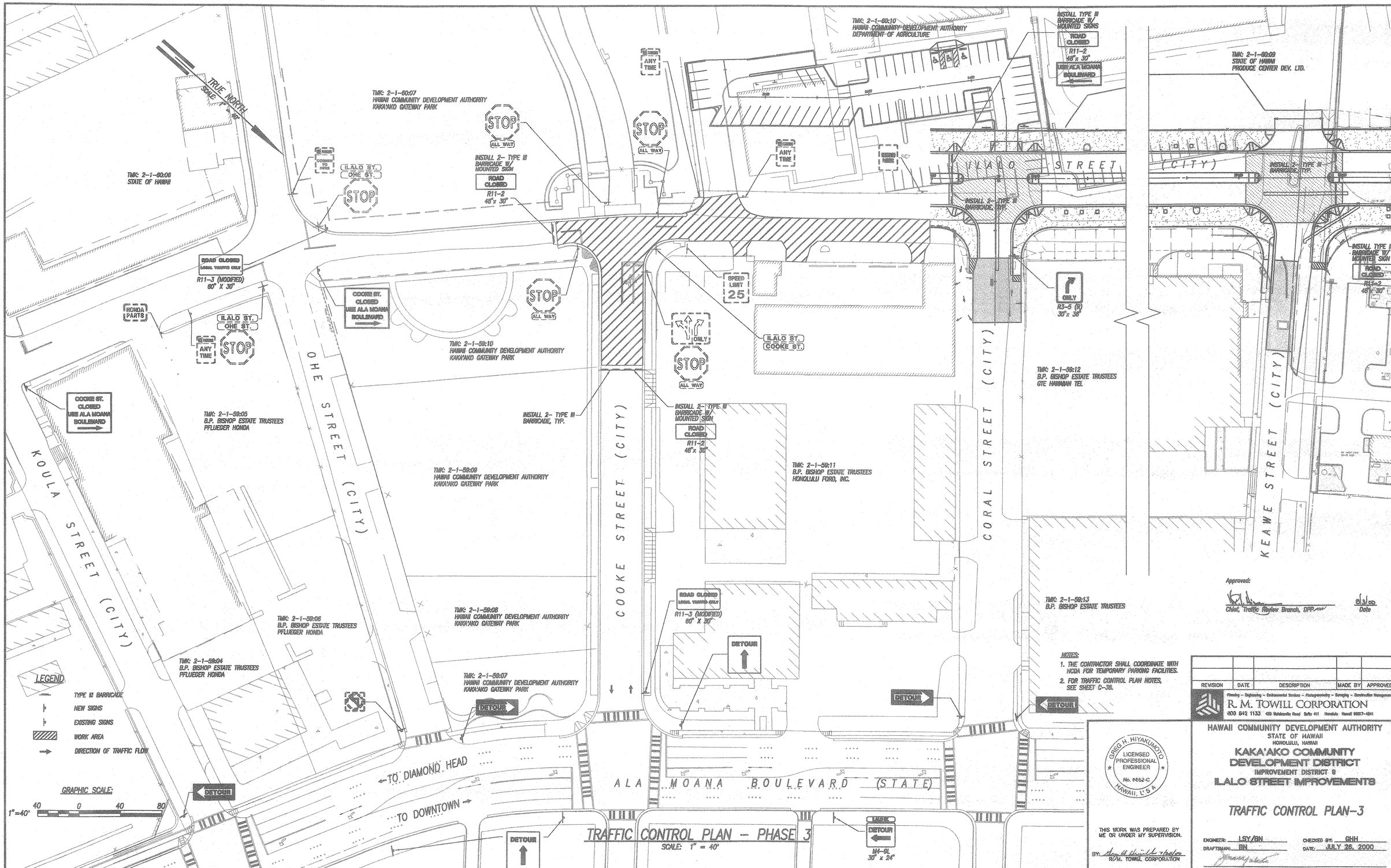

Approved:

Chief, Traffic Review Branch, DPP

8/3/00
Date

NOTES:

1. THE CONTRACTOR SHALL COORDINATE WITH HCDA FOR TEMPORARY PARKING FACILITIES.
2. FOR TRAFFIC CONTROL PLAN NOTES, SEE SHEET C-38.

REVISION	DATE	DESCRIPTION	MADE BY	APPROVED

Planning - Engineering - Environmental Services - Photogrammetry - Surveying - Construction Management
R. M. TOWILL CORPORATION
808 842 1133 420 Waiakamilo Road Suite 411 Honolulu, Hawaii 96817-4941

GREG H. HIYAKUMOTO
LICENSED PROFESSIONAL ENGINEER
No. 6652-C
HAWAII, U.S.A.

THIS WORK WAS PREPARED BY ME OR UNDER MY SUPERVISION.

BY: 7/20/00
R/M. TOWILL CORPORATION

HAWAII COMMUNITY DEVELOPMENT AUTHORITY
STATE OF HAWAII
HONOLULU, HAWAII

KAKA'AKO COMMUNITY DEVELOPMENT DISTRICT
IMPROVEMENT DISTRICT 9
ILALO STREET IMPROVEMENTS

TRAFFIC CONTROL PLAN-3

ENGINEER: LSY/BN
DRAFTSMAN: BN
CHECKED BY: GHH
DATE: JULY 26, 2000

EXECUTIVE DIRECTOR, HAWAII COMMUNITY DEVELOPMENT AUTHORITY

"RECORD DRAWINGS" C-40 SHEET 51 OF 140 SHEETS

FILE	POCKET	FOLDER	NO.

TMK: 2-1-60:05
STATE OF HAWAII

TMK: 2-1-60:06
STATE OF HAWAII

MATCH LINE
SEE SHT. C-42

STA. 9+00

TMK: 2-1-60:10
HAWAII COMMUNITY DEVELOPMENT AUTHORITY
DEPARTMENT OF AGRICULTURE

TMK: 2-1-60:09
STATE OF HAWAII
PRODUCE CENTER DEV. LTD.

TRUE NORTH
SCALE: 1" = 40'

TMK: 2-1-60:07
HAWAII COMMUNITY DEVELOPMENT AUTHORITY
KAKA'AKO GATEWAY PARK

TMK: 2-1-59:10
HAWAII COMMUNITY DEVELOPMENT AUTHORITY
KAKA'AKO GATEWAY PARK

TMK: 2-1-59:09
HAWAII COMMUNITY DEVELOPMENT AUTHORITY
KAKA'AKO GATEWAY PARK

TMK: 2-1-59:01
B.P. BISHOP ESTATE TRUSTEES
HONDA MAINTENANCE

TMK: 2-1-59:04
B.P. BISHOP ESTATE TRUSTEES
PFLUEGER HONDA

TMK: 2-1-59:05
B.P. BISHOP ESTATE TRUSTEES
PFLUEGER HONDA

TMK: 2-1-59:06
B.P. BISHOP ESTATE TRUSTEES
PFLUEGER HONDA

TMK: 2-1-59:03
B.P. BISHOP ESTATE TRUSTEES
CITY & COUNTY OF HONOLULU

TMK: 2-1-59:11
B.P. BISHOP ESTATE TRUSTEES
HONOLULU FORD, INC.

TMK: 2-1-59:12
B.P. BISHOP ESTATE TRUSTEES
GTE HAWAIIAN TEL

DETOUR

ANY TIME

CORNER TO HERE

ROAD CLOSED
LOCAL TRAFFIC ONLY
R11-3 (MODIFIED)
60" X 30"

INSTALL 2- TYPE III BARRICADE, TYP.

ILALO ST.
KOULA ST.
STOP

HONDA PARTS

INSTALL 2- TYPE III BARRICADE W/ MOUNTED SIGN
ROAD CLOSED
R11-2
48"x 30"

ILALO ST.
OHE ST.
STOP

OHE ST.
CLOSED
USE ALA MOANA BOULEVARD

INSTALL 2- TYPE III BARRICADE, TYP.

INSTALL 2- TYPE III BARRICADE W/ MOUNTED SIGN
ROAD CLOSED
R11-2
48"x 30"

CORNER TO HERE
ILALO ST.
OHE ST.
STOP

INSTALL TYPE III BARRICADE W/ MOUNTED SIGNS
ROAD CLOSED
R11-2
48"x 30"
USE ALA MOANA BOULEVARD

INSTALL 2- TYPE III BARRICADE, TYP.

ILALO STREET

KOULA STREET (CITY)

OHE STREET (CITY)

COOKE STREET (CITY)

CORAL STREET (CITY)

ALA MOANA BOULEVARD (STATE)

← TO DIAMOND HEAD

TO DOWNTOWN →

NOTES:

1. FOR TRAFFIC CONTROL PLAN NOTES, SEE SHEET C-38.

TRAFFIC CONTROL PLAN – PHASE 4

SCALE: 1" = 40'

LEGEND

- TYPE III BARRICADE
- NEW SIGNS
- EXISTING SIGNS
- WORK AREA
- DIRECTION OF TRAFFIC FLOW

GRAPHIC SCALES:

1"=40' 40 0 40 80

Approved:

Chief, Traffic Review Branch, DPP

Date

REVISION	DATE	DESCRIPTION	MADE BY	APPROVED

Planning – Engineering – Environmental Services – Photogrammetry – Surveying – Construction Management
R. M. TOWILL CORPORATION
808 842 1133 420 Ward Avenue Suite 411 Honolulu Hawaii 96814-4941

GREG H. HIYAKUMOTO
LICENSED PROFESSIONAL ENGINEER
No. 6662-C
HAWAII, U.S.A.

THIS WORK WAS PREPARED BY ME OR UNDER MY SUPERVISION.

BY: R.M. TOWILL CORPORATION

HAWAII COMMUNITY DEVELOPMENT AUTHORITY
STATE OF HAWAII
HONOLULU, HAWAII

KAKA'AKO COMMUNITY DEVELOPMENT DISTRICT
IMPROVEMENT DISTRICT 9
ILALO STREET IMPROVEMENTS

TRAFFIC CONTROL PLAN--4

ENGINEER: LSY/BN
DRAFTSMAN: BN
CHECKED BY: GHH
DATE: JULY 28, 2000

EXECUTIVE DIRECTOR, HAWAII COMMUNITY DEVELOPMENT AUTHORITY

"RECORD DRAWINGS" C-41 SHEET 52 OF 140 SHEETS

FILE	POCKET	FOLDER	NO.

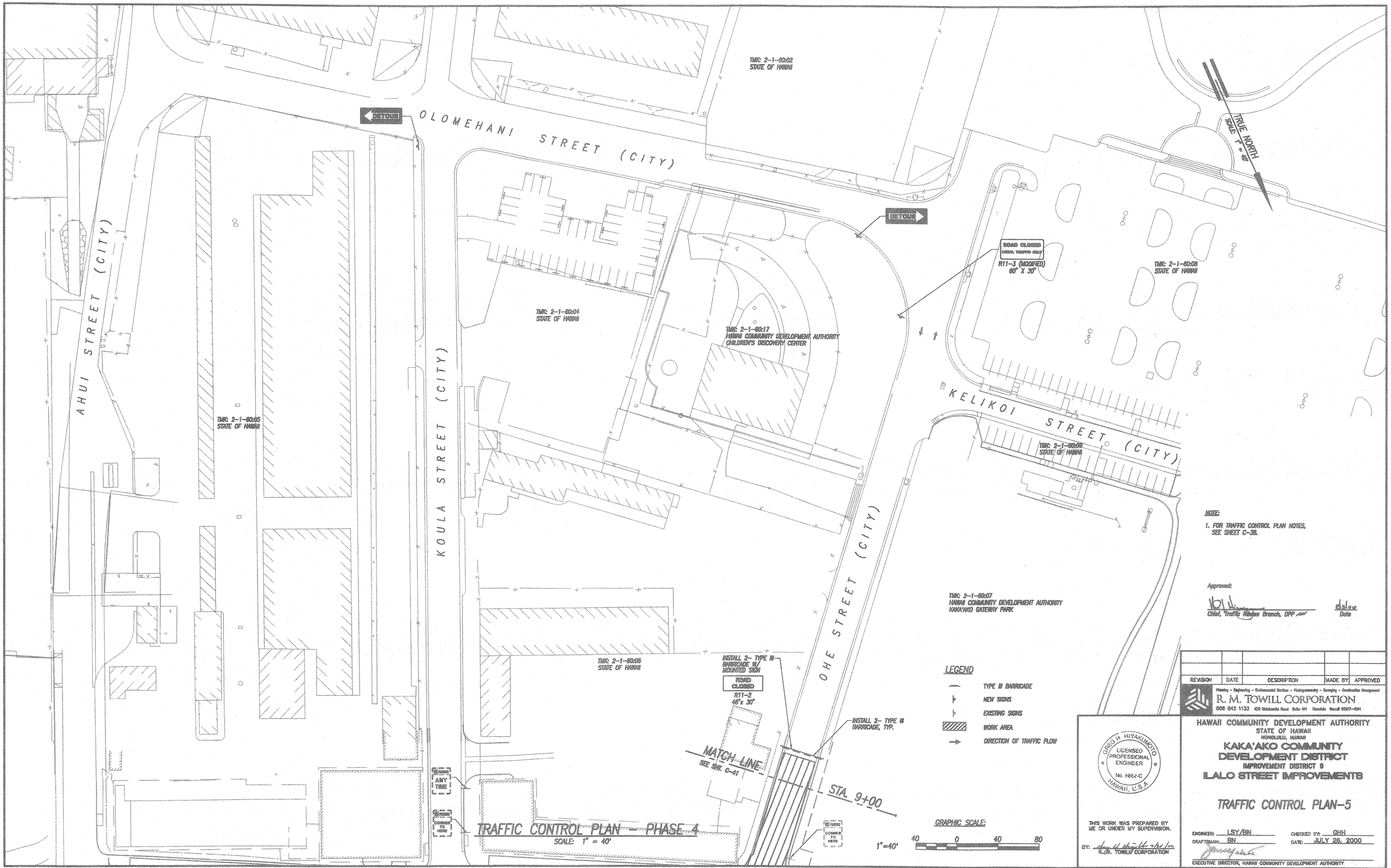

NOTE:

1. FOR TRAFFIC CONTROL PLAN NOTES, SEE SHEET C-38.

Approved:

Chief, Traffic Review Branch, DPP

Date

LEGEND

- TYPE III BARRICADE
- NEW SIGNS
- EXISTING SIGNS
- WORK AREA
- DIRECTION OF TRAFFIC FLOW

REVISION	DATE	DESCRIPTION	MADE BY	APPROVED

Planning – Engineering – Environmental Services – Photogrammetry – Surveying – Construction Management

R. M. TOWILL CORPORATION

808 842 1133 420 Waiakamilo Road Suite 411 Honolulu Hawaii 96817-4941

GREG H. HIYAKUMOTO
LICENSED PROFESSIONAL ENGINEER
No. 6662-C
HAWAII, U.S.A.

THIS WORK WAS PREPARED BY ME OR UNDER MY SUPERVISION.

BY: R.M. TOWILL CORPORATION

HAWAII COMMUNITY DEVELOPMENT AUTHORITY
STATE OF HAWAII
HONOLULU, HAWAII

KAKA'AKO COMMUNITY DEVELOPMENT DISTRICT
IMPROVEMENT DISTRICT 9
ILALO STREET IMPROVEMENTS

TRAFFIC CONTROL PLAN-5

ENGINEER: LSY/BN
DRAFTSMAN: BN
CHECKED BY: GHH
DATE: JULY 26, 2000

EXECUTIVE DIRECTOR, HAWAII COMMUNITY DEVELOPMENT AUTHORITY

"RECORD DRAWINGS" C-42 SHEET 53 OF 140 SHEETS

FILE	POCKET	FOLDER	NO.

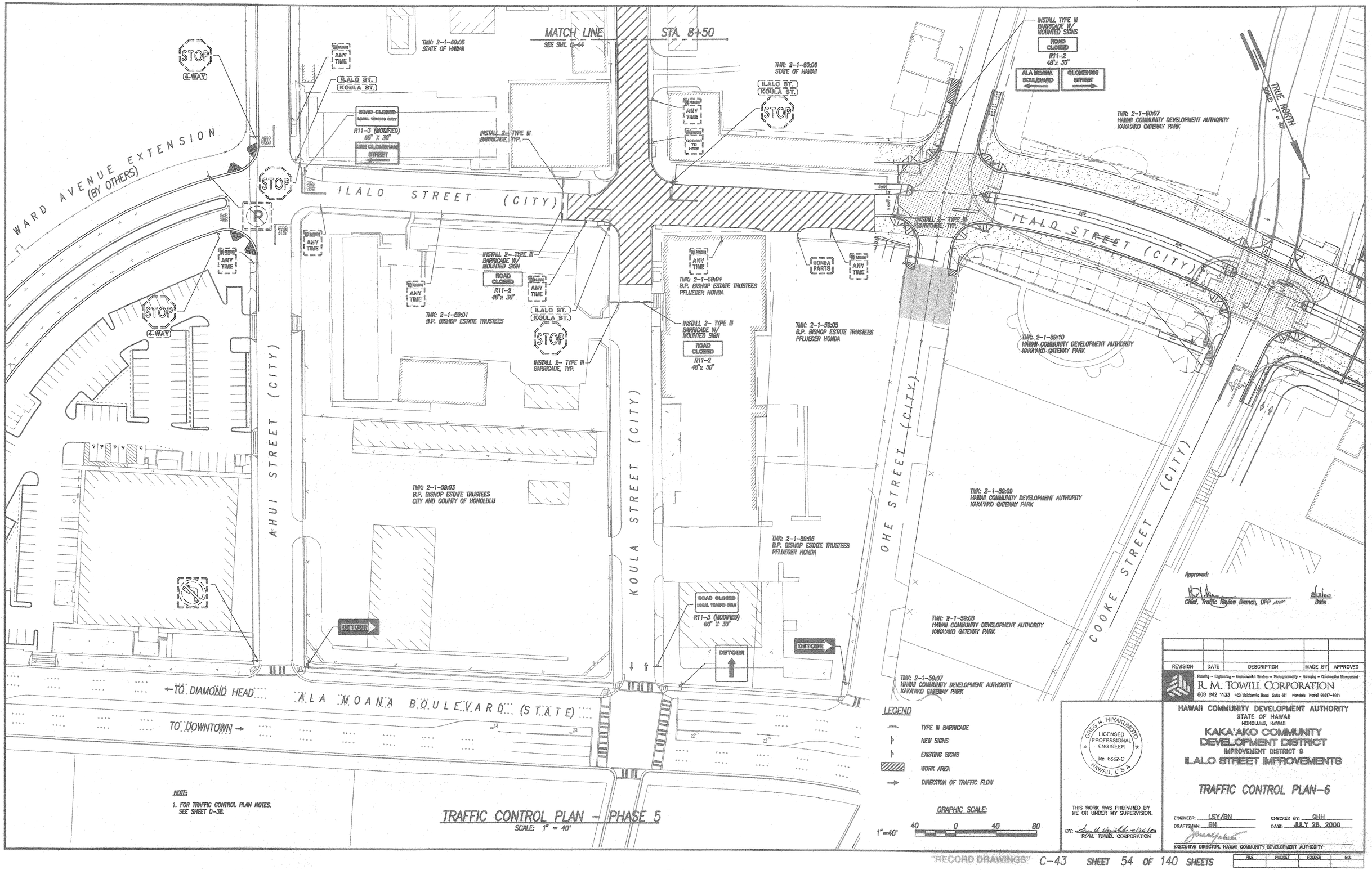

REVISION	DATE	DESCRIPTION	MADE BY	APPROVED

Planning – Engineering – Environmental Services – Photogrammetry – Surveying – Construction Management

R. M. TOWILL CORPORATION

808 842 1133 420 Waiakamilo Road Suite 411 Honolulu Hawaii 96817-4941

GREG H. HIYAKUMOTO
LICENSED PROFESSIONAL ENGINEER
No. 6662-C
HAWAII, U.S.A.

THIS WORK WAS PREPARED BY ME OR UNDER MY SUPERVISION.

BY: _____ 7/26/00
R.M. TOWILL CORPORATION

HAWAII COMMUNITY DEVELOPMENT AUTHORITY
STATE OF HAWAII
HONOLULU, HAWAII

KAKA'AKO COMMUNITY DEVELOPMENT DISTRICT
IMPROVEMENT DISTRICT 9

ILALO STREET IMPROVEMENTS

TRAFFIC CONTROL PLAN-6

ENGINEER: LSY/BN
DRAFTSMAN: BN
CHECKED BY: GHH
DATE: JULY 26, 2000

_____
EXECUTIVE DIRECTOR, HAWAII COMMUNITY DEVELOPMENT AUTHORITY

FILE	POCKET	FOLDER	NO.

AHUI STREET (CITY)

KOULA STREET (CITY)

OLOMEHANI STREET (CITY)

OHE STREET (CITY)

KELIKOI STREET (CITY)

DETOUR

DETOUR

DETOUR

INSTALL TYPE III BARRICADE W/ MOUNTED SIGN

ROAD CLOSED
LOCAL TRAFFIC ONLY

R11-3 (MODIFIED)
60" X 30"

INSTALL 2- TYPE III BARRICADE W/ MOUNTED SIGN

ROAD CLOSED

R11-2
48" x 30"

INSTALL 2- TYPE III BARRICADE, TYP.

TMK: 2-1-60:02
STATE OF HAWAII

TMK: 2-1-60:04
STATE OF HAWAII

TMK: 2-1-60:05
STATE OF HAWAII

TMK: 2-1-60:06
STATE OF HAWAII

TMK: 2-1-60:08
STATE OF HAWAII

TMK: 2-1-60:09
STATE OF HAWAII

TMK: 2-1-60:17
HAWAII COMMUNITY DEVELOPMENT AUTHORITY
CHILDREN'S DISCOVERY CENTER

TMK: 2-1-60:07
HAWAII COMMUNITY DEVELOPMENT AUTHORITY
KAKA'AKO GATEWAY PARK

TRUE NORTH
SCALE: 1" = 40'

MATCH LINE
SEE SHT. C-43

STA. 8+50

TRAFFIC CONTROL PLAN – PHASE 5

SCALE: 1" = 40'

NOTE:

1. FOR TRAFFIC CONTROL PLAN NOTES, SEE SHEET C-38.

Approved:

Chief, Traffic Review Branch, DPP — Date

GRAPHIC SCALE:

1"=40' 40 0 40 80

LEGEND

- TYPE III BARRICADE
- NEW SIGNS
- EXISTING SIGNS
- WORK AREA
- DIRECTION OF TRAFFIC FLOW

REVISION	DATE	DESCRIPTION	MADE BY	APPROVED

R. M. TOWILL CORPORATION
Planning – Engineering – Environmental Services – Photogrammetry – Surveying – Construction Management
808 842 1133 420 Waiakamilo Road Suite 411 Honolulu Hawaii 96817-4941

GREG H. HIYAKUMOTO
LICENSED PROFESSIONAL ENGINEER
No. 6662-C
HAWAII, U.S.A.

THIS WORK WAS PREPARED BY ME OR UNDER MY SUPERVISION.

BY: R.M. TOWILL CORPORATION

HAWAII COMMUNITY DEVELOPMENT AUTHORITY
STATE OF HAWAII
HONOLULU, HAWAII

KAKA'AKO COMMUNITY DEVELOPMENT DISTRICT
IMPROVEMENT DISTRICT 9

ILALO STREET IMPROVEMENTS

TRAFFIC CONTROL PLAN--7

ENGINEER: LSY/BN — CHECKED BY: GHH

DRAFTSMAN: BN — DATE: JULY 28, 2000

EXECUTIVE DIRECTOR, HAWAII COMMUNITY DEVELOPMENT AUTHORITY

FILE	POCKET	FOLDER	NO.

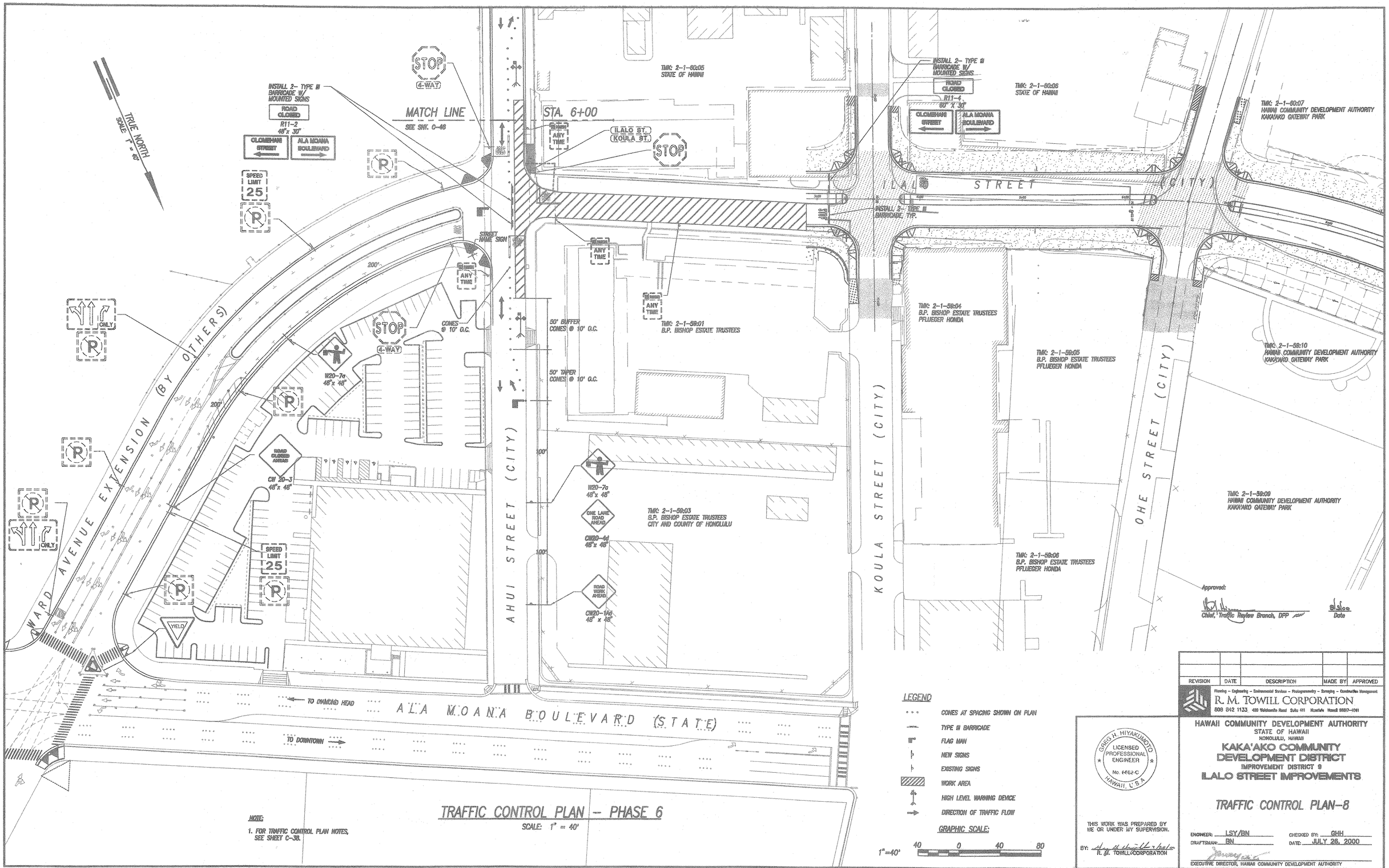

TRAFFIC CONTROL PLAN -- PHASE 6

SCALE: 1" = 40'

NOTE:

1. FOR TRAFFIC CONTROL PLAN NOTES, SEE SHEET C-3B.

LEGEND

- CONES AT SPACING SHOWN ON PLAN
- TYPE III BARRICADE
- FLAG MAN
- NEW SIGNS
- EXISTING SIGNS
- WORK AREA
- HIGH LEVEL WARNING DEVICE
- DIRECTION OF TRAFFIC FLOW

GRAPHIC SCALE:

1"=40' 40 0 40 80

Approved:

Chief, Traffic Review Branch, DPP — Date

REVISION	DATE	DESCRIPTION	MADE BY	APPROVED

Planning – Engineering – Environmental Services – Photogrammetry – Surveying – Construction Management

R. M. TOWILL CORPORATION

808 842 1133 420 Waiakamilo Road Suite 411 Honolulu Hawaii 96817-4941

GREG H. HIYAKUMOTO LICENSED PROFESSIONAL ENGINEER No. 6662-C HAWAII, U.S.A.

THIS WORK WAS PREPARED BY ME OR UNDER MY SUPERVISION.

BY: R. M. TOWILL CORPORATION

HAWAII COMMUNITY DEVELOPMENT AUTHORITY
STATE OF HAWAII
HONOLULU, HAWAII

KAKA'AKO COMMUNITY DEVELOPMENT DISTRICT

IMPROVEMENT DISTRICT 9

ILALO STREET IMPROVEMENTS

TRAFFIC CONTROL PLAN-8

ENGINEER: LSY/BN — CHECKED BY: GHH

DRAFTSMAN: BN — DATE: JULY 26, 2000

EXECUTIVE DIRECTOR, HAWAII COMMUNITY DEVELOPMENT AUTHORITY

FILE	POCKET	FOLDER	NO.

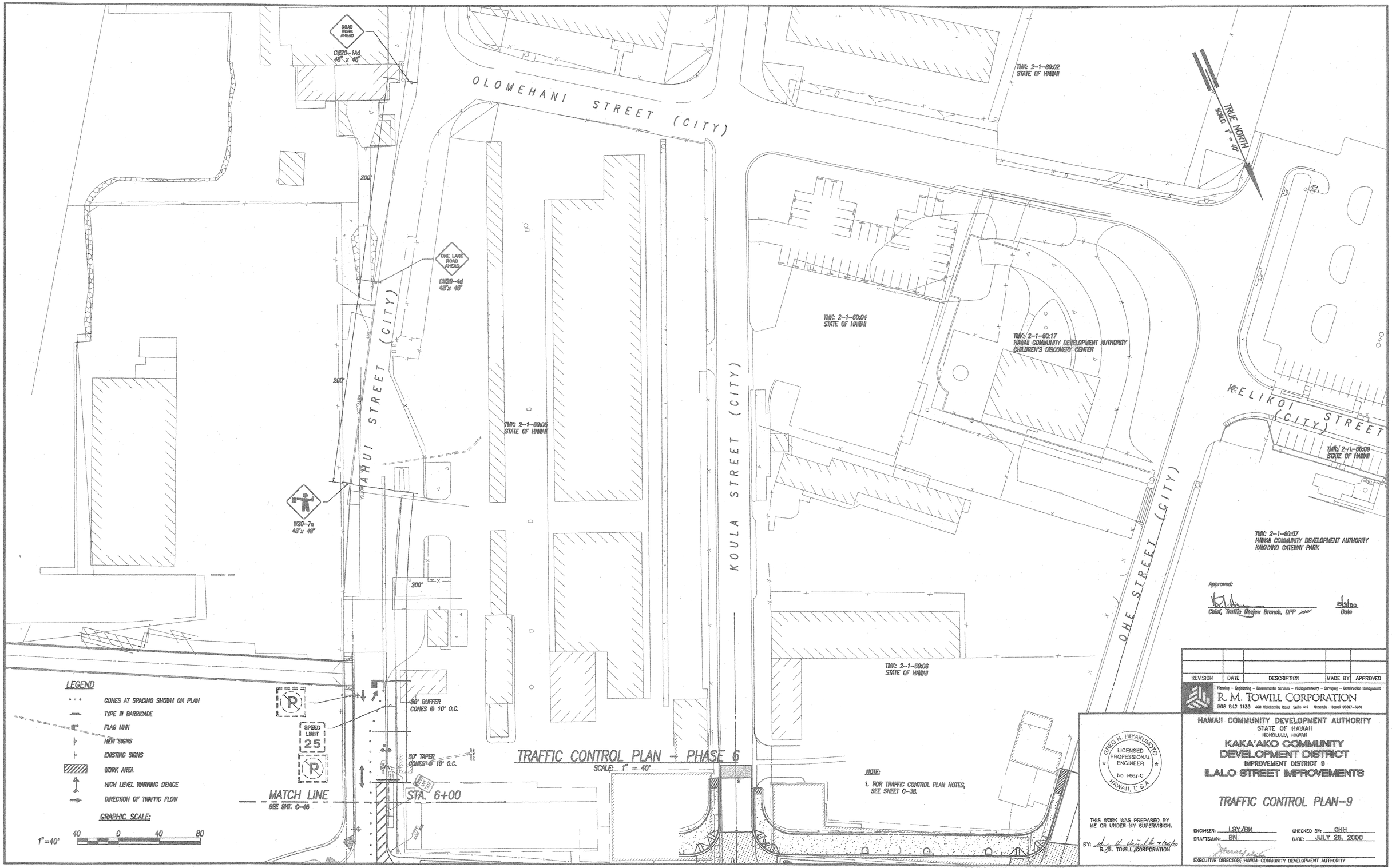

Approved:

Chief, Traffic Review Branch, DPP

Date

REVISION	DATE	DESCRIPTION	MADE BY	APPROVED

Planning - Engineering - Environmental Services - Photogrammetry - Surveying - Construction Management

R. M. TOWILL CORPORATION

808 842 1133 420 Waiakamilo Road Suite 411 Honolulu Hawaii 96817-4941

GREG H. HIYAKUMOTO
LICENSED PROFESSIONAL ENGINEER
No. 6662-C
HAWAII, U.S.A.

THIS WORK WAS PREPARED BY ME OR UNDER MY SUPERVISION.

BY: R.M. TOWILL CORPORATION

HAWAII COMMUNITY DEVELOPMENT AUTHORITY
STATE OF HAWAII
HONOLULU, HAWAII

KAKA'AKO COMMUNITY DEVELOPMENT DISTRICT
IMPROVEMENT DISTRICT 9

ILALO STREET IMPROVEMENTS

TRAFFIC CONTROL PLAN-9

ENGINEER: LSY/BN
DRAFTSMAN: BN
CHECKED BY: GHH
DATE: JULY 26, 2000

EXECUTIVE DIRECTOR, HAWAII COMMUNITY DEVELOPMENT AUTHORITY

FILE	POCKET	FOLDER	NO.

"RECORD DRAWINGS"

TMK: 2-1-60:09
STATE OF HAWAII
PRODUCE CENTER DEV. LTD.

TMK: 2-1-15:09
HAWAII COMMUNITY DEVELOPMENT AUTHORITY

RIGHT LANE CLOSED AHEAD
CW 20-5 (MODIFIED)
48" x 48"

CW4-2(R)-A
48" x 48"

50' TAPER
CONES @ 10' O.C.

200'

200'

ROAD WORK AHEAD
CW20-1Ad
48" x 48"

TRUE NORTH
SCALE: 1" = 40'

STOP

INSTALL 2- TYPE III BARRICADE, TYP.

INSTALL 2- TYPE III BARRICADE W/ MOUNTED SIGN

ROAD CLOSED
R11-2
48" x 30"

KEEP RIGHT
R4-7a
24" x 30"

CONES @ 10' O.C.

ILALO STREET (CITY)

FORREST AVENUE (HAWAII COMMUNITY DEVELOPMENT AUTHORITY)

ANY TIME

12" MIN

12" MIN

TMK: 2-1-58:12
B.P. BISHOP ESTATE TRUSTEES
GTE HAWAIIAN TEL

TMK: 2-1-15:23
HAWAII COMMUNITY DEVELOPMENT AUTHORITY
CITY & COUNTY OF HONOLULU WASTEWATER PUMP STATION

TMK: 2-1-15:09
HAWAII COMMUNITY DEVELOPMENT AUTHORITY

TMK: 2-1-15:22
HAWAII COMMUNITY DEVELOPMENT AUTHORITY
CITY & COUNTY OF HONOLULU WASTEWATER PUMP STATION

KEAWE STREET (CITY)

TMK: 2-1-15:43,44
HAWAII COMMUNITY DEVELOPMENT AUTHORITY

Approved:

Chief, Traffic Review Branch, DPP

Date

NOTE:

1. FOR TRAFFIC CONTROL PLAN NOTES, SEE SHEET C-38.

CONES @ 10' O.C.

KEEP LEFT
R4-8a
24" x 30"

KEEP RIGHT
R4-7a
24" x 30"

TEMP. 12" WIDE SOLID WHITE STOP BAR AND "STOP" MARKING

THRU TRAFFIC KEEP RIGHT
CW4-3(R)
48" x 48"

ROAD WORK AHEAD
CW20-1Ad
48" x 48"

STOP

200'

200'

ANY TIME

LEGEND

- CONES AT SPACING SHOWN ON PLAN
- TYPE III BARRICADE
- FLAG MAN
- NEW SIGNS
- EXISTING SIGNS
- WORK AREA
- HIGH LEVEL WARNING DEVICE
- DIRECTION OF TRAFFIC FLOW
- POLICE OFFICER

GRAPHIC SCALE:

1"=40' 40 0 40 80

TRAFFIC CONTROL PLAN — PHASE 7

SCALE: 1" = 40'

REVISION	DATE	DESCRIPTION	MADE BY	APPROVED

Planning - Engineering - Environmental Services - Photogrammetry - Surveying - Construction Management
R. M. TOWILL CORPORATION
808 842 1133 420 Waiakamilo Road Suite 411 Honolulu Hawaii 96817-4941

GREG H. HIYAKUMOTO
LICENSED PROFESSIONAL ENGINEER
No. 6662-C
HAWAII, U.S.A.

THIS WORK WAS PREPARED BY ME OR UNDER MY SUPERVISION.

BY: R.M. TOWILL CORPORATION

HAWAII COMMUNITY DEVELOPMENT AUTHORITY
STATE OF HAWAII
HONOLULU, HAWAII

KAKA'AKO COMMUNITY DEVELOPMENT DISTRICT

IMPROVEMENT DISTRICT 9

ILALO STREET IMPROVEMENTS

TRAFFIC CONTROL PLAN--10

ENGINEER: LSY/BN
DRAFTSMAN: BN
CHECKED BY: GHH
DATE: JULY 26, 2000

EXECUTIVE DIRECTOR, HAWAII COMMUNITY DEVELOPMENT AUTHORITY

FILE	POCKET	FOLDER	NO.

TMK: 2-1-60:09
STATE OF HAWAII
PRODUCE CENTER DEV. LTD.

TMK: 2-1-15:09
HAWAII COMMUNITY DEVELOPMENT AUTHORITY

STOP

INSTALL 2-TYPE III BARRICADE, TYP.

CONES @ 10' O.C.

100' TAPER
CONES @ 10' O.C.

CW4-2(L)-A
48" x 48"

ANY TIME

KEEP RIGHT
R4-7a
24" x 30"

LEFT LANE CLOSED AHEAD
CW 20-5 (MODIFIED)
48" x 48"

ROAD WORK AHEAD
CW20-1Ad
48" x 48"

200'

200'

ILALO STREET (CITY)

FORREST AVENUE (HAWAII COMMUNITY DEVELOPMENT AUTHORITY)

KEAWE STREET (CITY)

TMK: 2-1-15:23
HAWAII COMMUNITY DEVELOPMENT AUTHORITY
CITY & COUNTY OF HONOLULU WASTEWATER PUMP STATION

TMK: 2-1-59:12
B.P. BISHOP ESTATE TRUSTEES
GTE HAWAIIAN TEL

TMK: 2-1-15:22
HAWAII COMMUNITY DEVELOPMENT AUTHORITY
CITY & COUNTY OF HONOLULU WASTEWATER PUMP STATION

TMK: 2-1-15:43,44
HAWAII COMMUNITY DEVELOPMENT AUTHORITY

TMK: 2-1-15:09
HAWAII COMMUNITY DEVELOPMENT AUTHORITY

TRUE NORTH
SCALE: 1" = 40'

Approved:

Chief, Traffic Review Branch, DPP

Date

LEGEND

- CONES AT SPACING SHOWN ON PLAN
- TYPE III BARRICADE
- NEW SIGNS
- EXISTING SIGNS
- WORK AREA
- HIGH LEVEL WARNING DEVICE
- DIRECTION OF TRAFFIC FLOW

GRAPHIC SCALE:
40 0 40 80
1"=40'

TRAFFIC CONTROL PLAN – PHASE 8

SCALE: 1" = 40'

NOTE:
1. FOR TRAFFIC CONTROL PLAN NOTES, SEE SHEET C-38.

ANY TIME

GRAPHIC SCALE:
40 0 40 80
1"=40'

REVISION	DATE	DESCRIPTION	MADE BY	APPROVED

Planning – Engineering – Environmental Studies – Photogrammetry – Surveying – Construction Management
R. M. TOWILL CORPORATION
808 842 1133 420 Waiakamilo Road Suite 411 Honolulu Hawaii 96817-4941

GREG H. HIYAKUMOTO
LICENSED PROFESSIONAL ENGINEER
No. 6662-C
HAWAII, U.S.A.

THIS WORK WAS PREPARED BY ME OR UNDER MY SUPERVISION.

BY: _____
R/M. TOWILL CORPORATION

HAWAII COMMUNITY DEVELOPMENT AUTHORITY
STATE OF HAWAII
HONOLULU, HAWAII
KAKA'AKO COMMUNITY DEVELOPMENT DISTRICT
IMPROVEMENT DISTRICT 9
ILALO STREET IMPROVEMENTS

TRAFFIC CONTROL PLAN-11

ENGINEER: LSY/BN
DRAFTSMAN: BN
CHECKED BY: GHH
DATE: JULY 26, 2000

EXECUTIVE DIRECTOR, HAWAII COMMUNITY DEVELOPMENT AUTHORITY

"RECORD DRAWINGS" C-48 SHEET 59 OF 140 SHEETS

FILE	POCKET	FOLDER	NO.

GENERAL NOTES:

A. WORKMANSHIP AND MATERIALS SHALL CONFORM TO THE CITY AND COUNTY OF HONOLULU DEPARTMENT OF PUBLIC WORKS STANDARD SPECIFICATION/DETAILS. HOWEVER, WHERE REFERENCE IS MADE TO PERFORMANCE CONFORMING TO OTHER STANDARDS THE MORE STRINGENT SHALL APPLY.

B. THE CONTRACTOR SHALL COMPARE ALL THE CONTRACT DOCUMENTS WITH EACH OTHER AND REPORT IN WRITING TO THE CONSTRUCTION MANAGER ALL INCONSISTENCIES AND OMISSIONS.

C. THE CONTRACTOR SHALL TAKE FIELD MEASUREMENTS AND VERIFY FIELD CONDITIONS AND SHALL COMPARE SUCH FIELD MEASUREMENTS AND CONDITIONS WITH THE DRAWINGS BEFORE COMMENCING WORK. REPORT IN WRITING TO THE CONSTRUCTION MANAGER ALL INCONSISTENCIES OR OMISSIONS.

D. THE CONTRACTOR SHALL BE RESPONSIBLE FOR COORDINATING THE WORK OF ALL TRADES.

E. THE CONTRACTOR SHALL BE RESPONSIBLE FOR METHODS OF CONSTRUCTION, WORKMANSHIP AND JOB SAFETY. THE CONTRACTOR SHALL PROVIDE TEMPORARY SHORING AND BRACING AS REQUIRED FOR STABILITY OF STRUCTURAL MEMBERS AND SYSTEMS.

F. THE CONTRACTOR SHALL BE RESPONSIBLE FOR PROTECTION OF THE ADJACENT PROPERTIES, STRUCTURES, STREETS AND UTILITIES DURING THE CONSTRUCTION PERIOD.

G. DETAILS NOTED AS TYPICAL ON THE STRUCTURAL DRAWINGS SHALL APPLY IN ALL CONDITIONS UNLESS SPECIFICALLY SHOWN OR NOTED.

DESIGN CRITERIA:

A. DESIGN LIVE LOADS
- a. LANE LOAD ——— HS20-44
- b. SIDEWALK ——— 250 PSF

B. ALLOWABLE FOUNDATION BEARING CAPACITIES
- a. DEAD LOAD + LIVE LOAD ——— 2,500 PSF
- b. DEAD LOAD + LIVE LOAD + LATERAL LOAD ——— 3,300 PSF

C. RETAINING WALLS
- a. ACTIVE LATERAL PRESSURE
  - 1. ABOVE GROUNDWATER ——— 35 PCF
  - 2. BELOW GROUNDWATER ——— 80 PCF
- b. RESTRAINED LATERAL PRESSURE
  - 1. ABOVE GROUNDWATER ——— 52 PCF
  - 2. BELOW GROUNDWATER ——— 85 PCF

FOUNDATION:

A. FOUNDATION DESIGN IS BASED UPON GEOTECHNICAL INVESTIGATION BY GEOLABS-HAWAII, DATED JUNE 18, 1999.

B. CONTRACTOR SHALL PROVIDE FOR DESIGN AND INSTALLATION OF ALL CRIBBING, SHEETING AND SHORING NECESSARY TO PRESERVE EXCAVATIONS AND EARTH BANKS, AND ADJACENT STRUCTURES AND PROPERTY FROM DAMAGE. A MONITORING PROGRAM SHALL BE DEVELOPED AND IMPLEMENTED BY THE CONTRACTOR TO DETECT GROUND MOVEMENT AND/OR SUBSIDENCE ADJACENT TO THE BOX CULVERT, UTILITY LINE, AND MANHOLE EXCAVATIONS. GROUND MOVEMENT AND/OR SUBSIDENCE MAY OCCUR AS A RESULT OF SHORING AND DEWATERING OPERATIONS. A QUALIFIED GEOTECHNICAL ENGINEER SHALL BE RETAINED BY THE CONTRACTOR TO DESIGN AND EVALUATE THE SHORING SYSTEM USED.

C. EXCAVATED SOILS SHALL NOT BE STOCKPILED CLOSER THAN A HORIZONTAL DISTANCE EQUAL TO THE DEPTH OF THE EXCAVATION MEASURED FROM THE EDGE OF THE EXCAVATION. EXCAVATED SOILS SHALL NOT BE STOCKPILED CLOSER THAN 15 FEET FROM EXISTING UNDERGROUND UTILITIES.

D. EXCAVATIONS SHALL BE PROPERLY BACKFILLED.

a. FILL MATERIAL AND BACKFILL SHALL BE PLACED IN LEVEL LIFTS NOT EXCEEDING 8 INCHES IN LOOSE THICKNESS, MOISTURE-CONDITIONED TO ABOVE THE OPTIMUM MOISTURE CONTENT, AND COMPACTED TO A MINIMUM OF 90 PERCENT RELATIVE COMPACTION. COMPACTION REQUIREMENTS FOR FILLS AND BACKFILLS WITHIN 3 FEET OF THE FINISHED PAVEMENT GRADES SHALL BE INCREASED TO A MINIMUM 95 PERCENT RELATIVE COMPACTION.

b. FILL MATERIAL AND BACKFILL

1. NEAR-SURFACE EXCAVATED ON-SITE SOILS, EXCLUDING THE SATURATED MATERIALS BELOW THE WATER TABLE, MAY BE RE-USED AS A SOURCE OF GENERAL FILL AND BACKFILL MATERIAL.

2. EXCAVATED WET SILTY SANDS GENERATED FROM THE UTILITY LINE EXCAVATION MAY ALSO BE RE-USED AS A SOURCE OF FILL AND BACKFILL MATERIAL PROVIDED THEY ARE AERATED AND BROUGHT TO A MOISTURE CONTENT THAT WILL ALLOW COMPACTION OF THE MATERIALS TO THE SPECIFIED REQUIREMENTS.

3. IMPORTED FILL MATERIALS SHALL CONSIST OF NON-EXPANSIVE SELECT GRANULAR FILL MATERIALS SUCH AS CRUSHED CORAL AND BASALT GRAVEL. THE MATERIAL SHALL BE WELL GRADED FROM COARSE TO FINE WITH NO PARTICLES GREATER THAN 3 INCHES IN LARGEST DIMENSION. IT SHALL HAVE A CALIFORNIA BEARING RATIO (CBR) VALUE OF 20 OR HIGHER AND A SWELL POTENTIAL OF 1 PERCENT OR LESS WHEN TESTED IN ACCORDANCE WITH ASTM TEST DESIGNATION D 1883. FILL MATERIALS SHALL BE TESTED AND APPROVED PRIOR TO HAULING TO THE PROJECT SITE.

4. FILL OR BACKFILL BELOW THE WATER LEVEL SHALL CONSIST OF FREE-DRAINING GRANULAR MATERIALS, SUCH AS NO. 3B FINE GRAVEL (ASTM C33, NO. 67 GRADATION), UP TO A MINIMUM OF 12 INCHES ABOVE THE HIGHEST ANTICIPATED GROUNDWATER LEVEL. THE FREE-DRAINING MATERIALS SHALL BE WRAPPED IN A NON-WOVEN FILTER FABRIC, SUCH AS MIRAFI 180N OR EQUIVALENT. FILTER FABRIC SHALL BE LAPPED A MINIMUM OF 24 INCHES. IF PLACEMENT OF FILTER FABRIC IN WET CONDITIONS IS NECESSARY, THE SEAMS OF THE FABRIC SHALL BE SEWN, IN-LIEU OF OVERLAPPING.

DEWATERING:

A. CONTRACTOR SHALL PROVIDE FOR DE-WATERING OF EXCAVATION FROM EITHER SURFACE WATER, GROUND WATER OR SEEPAGE.

B. DEWATERING INCLUDES ALL WORKS OR SYSTEMS REQUIRED TO LOWER THE NATURAL GROUNDWATER TABLE AND/OR TO EXCLUDE WATER FROM THE EXCAVATIONS TO ALLOW CONSTRUCTION OF THE PROPOSED STRUCTURES UNDER SAFE AND DRY CONDITIONS. THESE WORKS OR SYSTEMS MAY INCLUDE, BUT ARE NOT LIMITED TO, PUMPING.

C. THE DEWATERING METHOD SHALL RESULT IN THE LEAST DISTURBANCE OR DAMAGE TO EXISTING BUILDINGS, ROADS, AND ENVIRONMENT.

D. THE DEWATERING METHOD SHALL MAINTAIN STABILITY OF, AND ALSO PROVIDE SAFE AND DRY WORKING CONDITIONS IN, THE EXCAVATION.

E. THE DEWATERING METHOD SHALL BE SUFFICIENTLY FLEXIBLE TO ALLOW MODIFICATIONS TO ACCOMMODATE VARIOUS GROUND CONDITIONS.

F. A QUALIFIED GEOTECHNICAL ENGINEER SHALL BE RETAINED BY THE CONTRACTOR TO DESIGN AND EVALUATE THE DEWATERING SYSTEM USED.

CONCRETE:

A. CONCRETE SHALL HAVE A MINIMUM 28 DAY COMPRESSIVE STRENGTH AS FOLLOWS:

a. CAST-IN-PLACE MANHOLES, DEPARTMENT OF PUBLIC WORKS CLASS "A", 3000 PSI.

b. PRECAST MANHOLES, CONE AND RISERS, DEPARTMENT OF PUBLIC WORKS CLASS "AAA", 4000 PSI.

c. ALL OTHER CONCRETE, DEPARTMENT OF PUBLIC WORKS CLASS "A", 3000 PSI.

B. ALL INSERTS, ANCHOR BOLTS, PLATES, AND OTHER ITEMS TO BE CAST IN THE CONCRETE SHALL BE HOT-DIPPED GALVANIZED UNLESS OTHERWISE NOTED.

C. REINFORCING BARS, ANCHOR BOLTS, INSERTS, AND OTHER ITEMS TO BE CAST IN THE CONCRETE SHALL BE SECURED IN POSITION PRIOR TO PLACEMENT OF CONCRETE.

D. MORTAR SHALL BE AS SPECIFIED BY THE STANDARD SPECIFICATION FOR PUBLIC WORKS CONSTRUCTION SEPTEMBER 1986. WHERE THE MORTAR IS TO COME IN DIRECT CONTACT WITH SEWAGE OR SEWAGE GASES, THE FINE AGGREGATE SHALL CONTAIN NO CORAL SAND.

E. WATERSTOPS SHALL BE HYDROPHILIC TYPE, ADEKA ULTRASEAL MC-2010M OR APPROVED EQUAL.

F. EPOXY FOR DOWELS SHALL BE SIMPSON SET HIGH STRENGTH EPOXY BY SIMPSON STRONG-TIE COMPANY, INC. OR APPROVED EQUAL. INSTALL PER MANUFACTURER'S RECOMMENDATIONS.

G. POLYMER MODIFIED CONCRETE SHALL BE SIKATOP 122 BY SIKA CORPORATION OR APPROVED EQUAL. INSTALL PER MANUFACTURER'S INSTRUCTIONS.

REINFORCING STEEL:

A. REINFORCING STEEL SHALL BE DEFORMED BARS CONFORMING TO ASTM A615, GRADE 60.

B. CLEAR CONCRETE COVER FOR REINFORCING BARS SHALL BE AS FOLLOWS, UNLESS OTHERWISE NOTED:

- a. CONCRETE CAST AGAINST EARTH ——— 3"
- b. CONCRETE, FORMED AND EXPOSED TO EARTH OR WEATHER ——— 2"

C. REINFORCING STEEL SHALL BE SPLICED WHERE INDICATED ON PLANS. PROVIDE LAP SPLICE LENGTH PER TYPICAL DETAILS AND SCHEDULE, UNLESS OTHERWISE NOTED.

D. MECHANICAL SPLICE CONNECTORS SHALL DEVELOP IN TENSION 125 PERCENT OF THE SPECIFIED MINIMUM YIELD STRENGTH OF REINFORCING BARS.

E. BAR BENDS AND HOOKS SHALL BE "STANDARD HOOKS" IN ACCORDANCE WITH ACI 318.

STRUCTURAL STEEL:

A. FABRICATION AND ERECTION OF STRUCTURAL STEEL SHALL CONFORM TO THE AMERICAN INSTITUTE OF STEEL CONSTRUCTION MANUAL OF STEEL CONSTRUCTION, NINTH EDITION.

B. STRUCTURAL STEEL SHALL CONFORM TO ASTM A36 UNLESS OTHERWISE NOTED.

C. STEEL WIDE FLANGE SECTIONS SHALL CONFORM TO ASTM A992, GRADE 50.

D. BOLTS SHALL CONFORM TO ASTM A307, GRADE A UNLESS OTHERWISE NOTED.

E. WELDS AND WELDING PROCEDURES SHALL CONFORM TO THE STRUCTURAL WELDING CODE AWS D1.1 OF THE AMERICAN WELDING SOCIETY.

F. WELDING SHALL BE PERFORMED BY WELDERS PREQUALIFIED FOR WELDING PROCEDURES TO BE USED.

G. WELDING ELECTRODES SHALL BE E70XX.

H. EXPOSED STEEL SHALL BE HOT-DIPPED GALVANIZED.

APPROVED: DATE: 7/18/00

Chief, Civil Engineering Branch, DPP

REVISION	DATE	DESCRIPTION	MADE BY	APPROVED

Planning - Engineering - Environmental Services - Photogrammetry - Surveying - Construction Management
R. M. TOWILL CORPORATION
808 842 1133 420 Waiakamilo Road Suite 411 Honolulu Hawaii 96817-4941

KEN KAZUO HAYASHIDA LICENSED PROFESSIONAL ENGINEER No. 6818-S HAWAII, U.S.A.

THIS WORK WAS PREPARED BY ME OR UNDER MY SUPERVISION.

HAWAII COMMUNITY DEVELOPMENT AUTHORITY
STATE OF HAWAII
HONOLULU, HAWAII

KAKA'AKO COMMUNITY DEVELOPMENT DISTRICT
IMPROVEMENT DISTRICT 9
ILALO STREET IMPROVEMENTS

GENERAL NOTES AND TYPICAL DETAILS

ENGINEER: SK CHECKED BY: KKH
DRAFTSMAN: DO, DA, KS DATE: JULY 13, 2000

EXECUTIVE DIRECTOR, HAWAII COMMUNITY DEVELOPMENT AUTHORITY

"RECORD DRAWINGS" S-1 SHEET 60 OF 140 SHEETS

FILE	POCKET	FOLDER	NO.

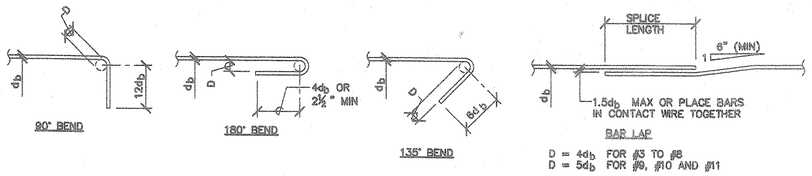

MINIMUM SPLICE & EMBEDMENT LENGTHS

	CONCRETE STRENGTH = 3,000 PSI						CONCRETE STRENGTH = 4,000 PSI					
	LAP SPLICE		EMBEDMENT				LAP SPLICE		EMBEDMENT			
BAR SIZE	OTHER BARS	TOP BARS	OTHER BARS	TOP BARS	BARS WITH STD HOOK	BAR SIZE	OTHER BARS	TOP BARS	OTHER BARS	TOP BARS	BARS WITH STD HOOK
#3	16"	21"	12"	16"	8"	#3	15"	19"	12"	16"	7"
#4	21"	28"	16"	21"	11"	#4	19"	25"	12"	16"	10"
#5	27"	35"	21"	27"	14"	#5	24"	31"	15"	20"	12"
#6	32"	42"	25"	32"	16"	#6	29"	37"	17"	22"	15"
#7	37"	49"	29"	37"	19"	#7	42"	54"	25"	33"	17"
#8	45"	58"	34"	45"	22"	#8	48"	62"	29"	38"	19"
#9	57"	74"	44"	57"	25"	#9	54"	70"	32"	42"	22"
#10	72"	94"	56"	72"	28"	#10	61"	79"	36"	47"	24"
#11	89"	116"	68"	89"	31"	#11	67"	87"	40"	52"	27"

NOTE:

1. MULTIPLY LENGTHS BY 80% FOR BARS WITH CENTER TO CENTER SPACING GREATER THAN 6 BAR DIAMETERS AND CLEAR COVER GREATER THAN 2½ BAR DIAMETERS.
2. "TOP BARS" ARE HORIZONTAL BARS WITH 12" OR MORE OF CONCRETE CAST BELOW THE SPLICE OR EMBEDMENT.

1 / S-2 TYPICAL REBAR SPLICE AND EMBEDMENT LENGTH SCHEDULE
NOT TO SCALE

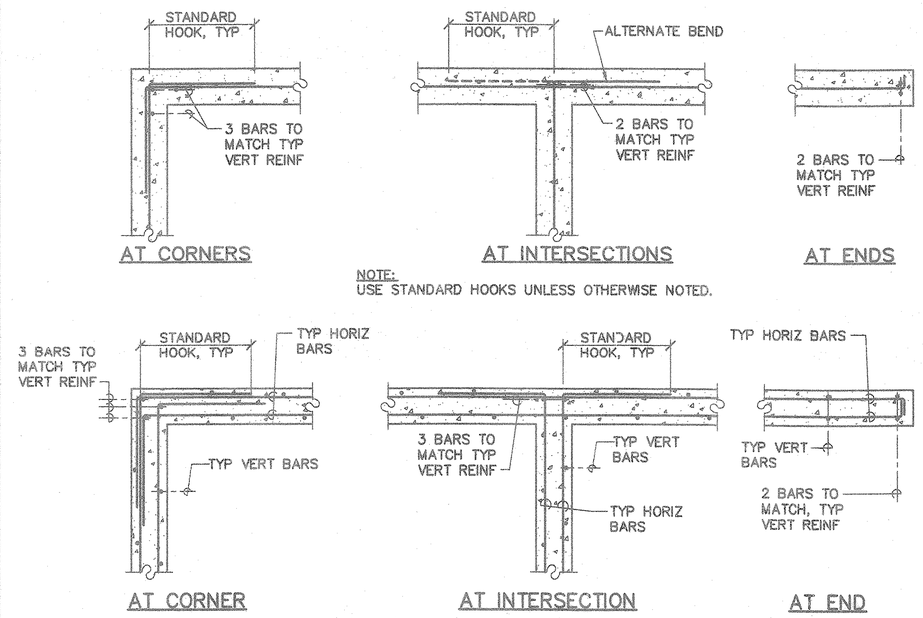

2 / S-2 TYPICAL CONCRETE WALL DETAILS
NOT TO SCALE

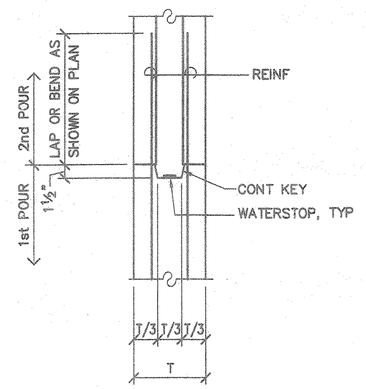

3 / S-2 TYP CONSTRUCTION JOINT
NOT TO SCALE

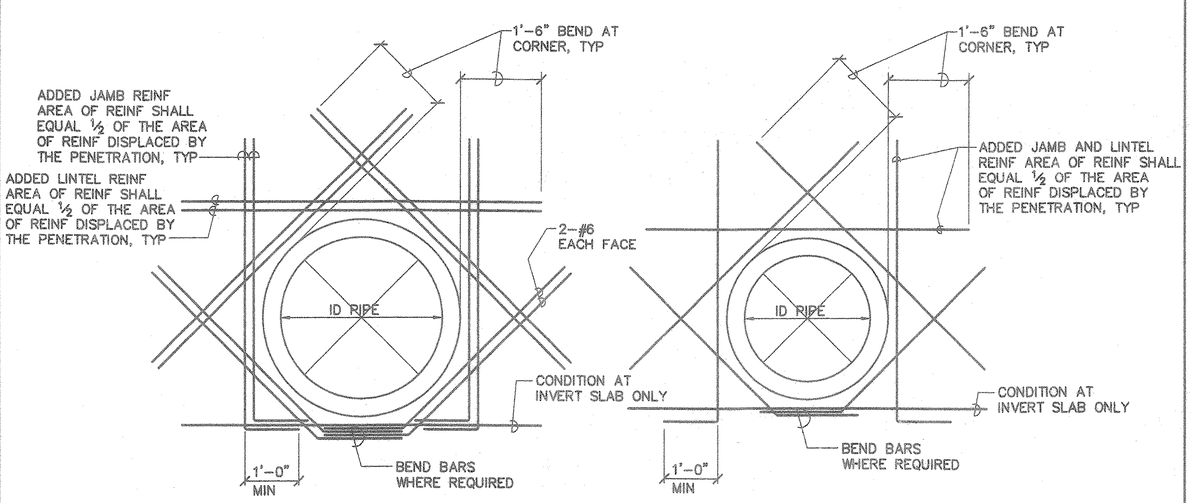

NOTE

2" CLEARANCE BETWEEN PIPE AND REINFORCEMENT

4 / S-2 TYPICAL PIPE PENETRATION DETAIL
NOT TO SCALE

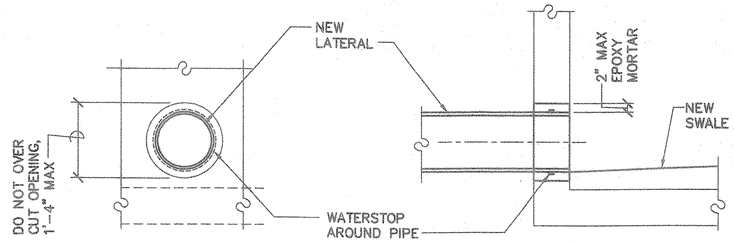

5 / S-2 TYPICAL NEW LATERAL CONNECTION TO EXIST SMH
NOT TO SCALE

APPROVED: DATE: 7/18/00
Chief, Civil Engineering Branch, DPP
Dennis M. Nishimura 7/25/00
Chief, Wastewater Branch, DPP

REVISION	DATE	DESCRIPTION	MADE BY	APPROVED

Planning – Engineering – Environmental Services – Photogrammetry – Surveying – Construction Management
R. M. TOWILL CORPORATION
808 842 1133 420 Waiakamilo Road Suite 411 Honolulu Hawaii 96817-4941

KEN KAZUO HAYASHIDA LICENSED PROFESSIONAL ENGINEER No. 6818-S HAWAII, U.S.A.

THIS WORK WAS PREPARED BY ME OR UNDER MY SUPERVISION.

HAWAII COMMUNITY DEVELOPMENT AUTHORITY
STATE OF HAWAII
HONOLULU, HAWAII
KAKA'AKO COMMUNITY DEVELOPMENT DISTRICT
IMPROVEMENT DISTRICT 9
ILALO STREET IMPROVEMENTS
TYPICAL DETAILS

ENGINEER: SK CHECKED BY: KKH
DRAFTSMAN: DO, DA, KS DATE: JULY 13, 2000
EXECUTIVE DIRECTOR, HAWAII COMMUNITY DEVELOPMENT AUTHORITY

FILE	POCKET	FOLDER	NO.

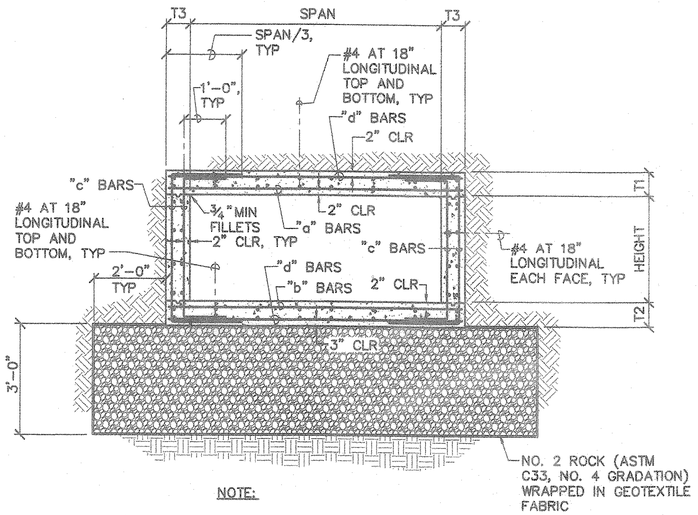

NOTE:

FOR DIMENSIONS AND REINFORCEMENT SEE TABLE 1.

1 / S-3 TYPICAL SINGLE BOX CULVERT AND BOX DRAIN

SCALE: 1/2"=1'-0"

TABLE 1				
SIZE (SPANxHEIGHT)	5'-0"x3'-0"	8'-0"x4'-0"	VARIES 8'-0" TO 12'-0"x 4'-0" TO 3'-2"	VARIES 12'-1" TO 16'-0"x 3'-1" TO 2'-0"
TOP SLAB T1	8"	10"	1'-2"	1'-2"
BOTTOM SLAB T2	8"	10"	1'-2"	1'-2"
SIDEWALL T3	8"	8"	1'-2"	1'-2"
"a" BARS	#5 AT 6"	#5 AT 6"	#5 AT 6"	#6 AT 6"
"b" BARS	#4 AT 8"	#5 AT 10"	#5 AT 6"	#6 AT 6"
"c" BARS	#5 AT 6"	#4 AT 10"	#5 AT 6"	#6 AT 6"
"d" BARS	#4 AT 18"	#4 AT 16"	#5 AT 6"	#6 AT 6"
REMARKS				

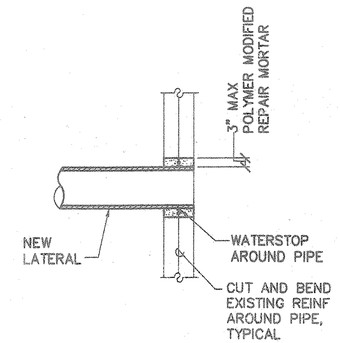

NOTES:
1. WHEN CREATING PIPE OPENINGS, DO NOT BREAK THE INVERT OR SOFFIT.
2. PROVIDE #4 HOOP AROUND PIPE. LAP ENDS 12" MINIMUM.

3 / S-3 TYPICAL NEW DRAIN PIPE CONNECTION

SCALE: 1/2"=1'-0"

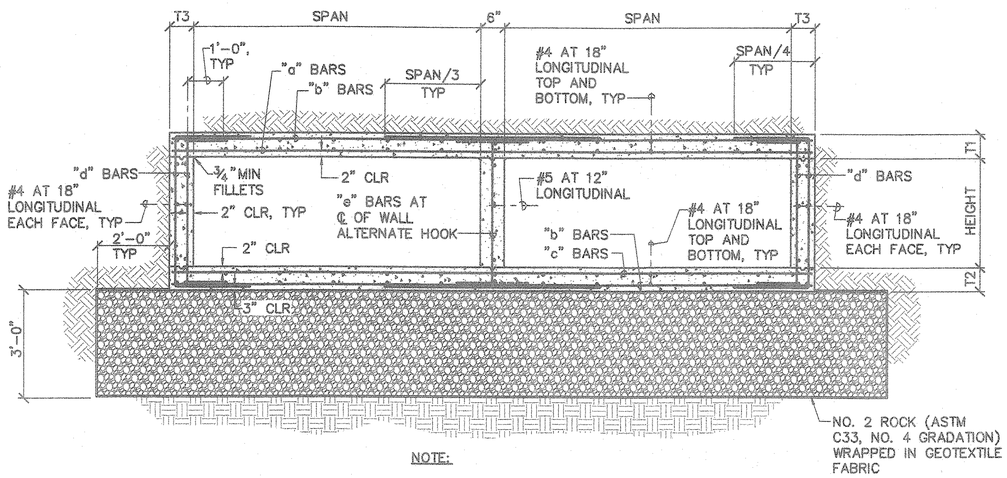

NOTE:

FOR DIMENSIONS AND REINFORCEMENT SEE TABLE 2.

2 / S-3 TYPICAL DOUBLE BOX DRAIN

SCALE: 1/2"=1'-0"

TABLE 2	
SPAN	8'-0"
HEIGHT	2'-0"
TOP SLAB T1	10"
BOTTOM SLAB T2	10"
SIDEWALL T3	8"
"a" BARS	#5 AT 6"
"b" BARS	#5 AT 6"
"c" BARS	#5 AT 12"
"d" BARS	#5 AT 8"
"e" BARS	#5 AT 12"
REMARKS	

APPROVED: M. [signature] DATE: 7/18/00

Chief, Civil Engineering Branch, DPP

REVISION	DATE	DESCRIPTION	MADE BY	APPROVED

Planning – Engineering – Environmental Services – Photogrammetry – Surveying – Construction Management
R. M. TOWILL CORPORATION
808 842 1133 420 Waiakamilo Road Suite 411 Honolulu Hawaii 96817-4941

KEN KAZUO HAYASHIDA LICENSED PROFESSIONAL ENGINEER No. 6818-S HAWAII, U.S.A.

THIS WORK WAS PREPARED BY ME OR UNDER MY SUPERVISION.

HAWAII COMMUNITY DEVELOPMENT AUTHORITY
STATE OF HAWAII
HONOLULU, HAWAII

KAKA'AKO COMMUNITY DEVELOPMENT DISTRICT
IMPROVEMENT DISTRICT 9
ILALO STREET IMPROVEMENTS

TYPICAL BOX CULVERTS AND DRAINS

ENGINEER: SK CHECKED BY: KKH
DRAFTSMAN: DO, DA, KS DATE: JULY 13, 2000

EXECUTIVE DIRECTOR, HAWAII COMMUNITY DEVELOPMENT AUTHORITY

FILE	POCKET	FOLDER	NO.

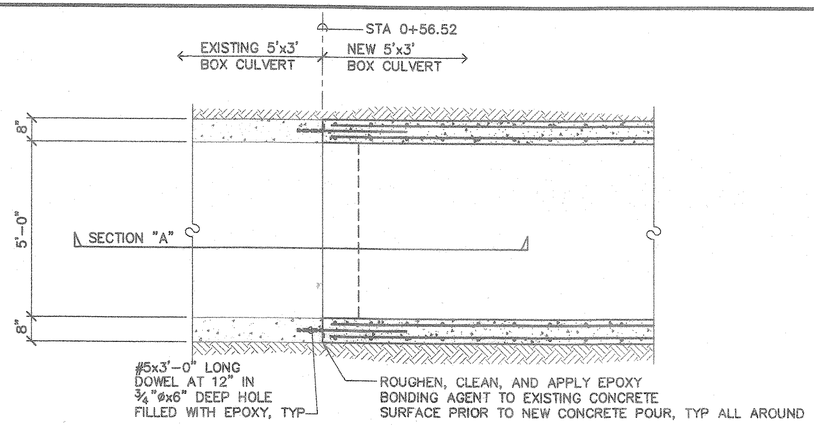

FOUNDATION PLAN

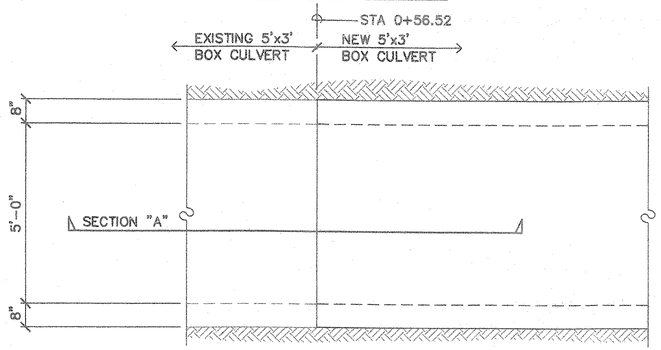

TOP PLAN AT CULVERT

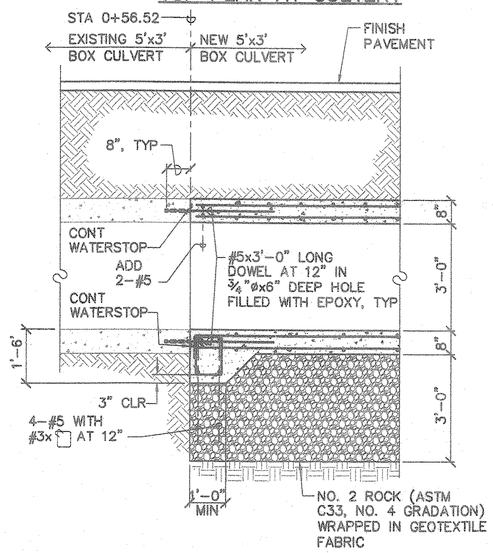

SECTION "A"

1 / S-4 CONNECTION AT ILALO STREET – STA. 0+56.52

SCALE: 1/2"=1'-0"

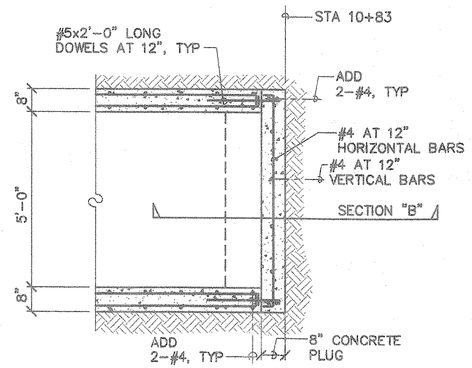

FOUNDATION PLAN

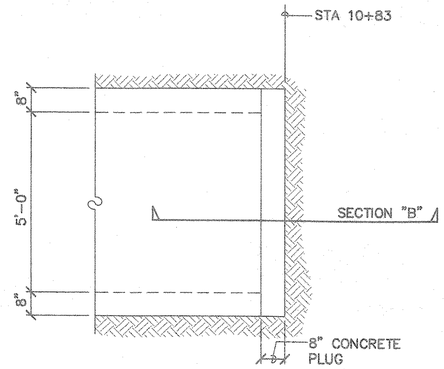

TOP PLAN AT CULVERT

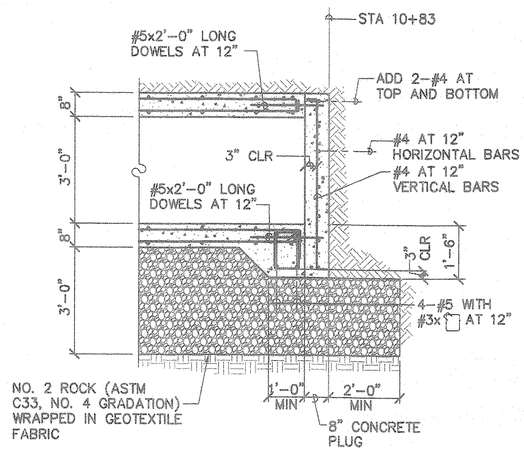

SECTION "B"

2 / S-4 END AT KOULA STREET – STA. 10+83

SCALE: 1/2"=1'-0"

APPROVED: DATE: 7/18/00

Chief, Civil Engineering Branch, DPP

REVISION	DATE	DESCRIPTION	MADE BY	APPROVED

Planning – Engineering – Environmental Services – Photogrammetry – Surveying – Construction Management
R. M. TOWILL CORPORATION
808 842 1133 420 Waiakamilo Road Suite 411 Honolulu Hawaii 96817-4941

KEN KAZUO HAYASHIDA LICENSED PROFESSIONAL ENGINEER No. 6616-S HAWAII, U.S.A.

THIS WORK WAS PREPARED BY ME OR UNDER MY SUPERVISION.

HAWAII COMMUNITY DEVELOPMENT AUTHORITY
STATE OF HAWAII
HONOLULU, HAWAII

KAKA'AKO COMMUNITY DEVELOPMENT DISTRICT
IMPROVEMENT DISTRICT 9
ILALO STREET IMPROVEMENTS

CULVERT CONNECTION AND END PLANS AND SECTIONS

ENGINEER: SK CHECKED BY: KKH
DRAFTSMAN: DO, DA, KS DATE: JULY 13, 2000

EXECUTIVE DIRECTOR, HAWAII COMMUNITY DEVELOPMENT AUTHORITY

FILE	POCKET	FOLDER	NO.

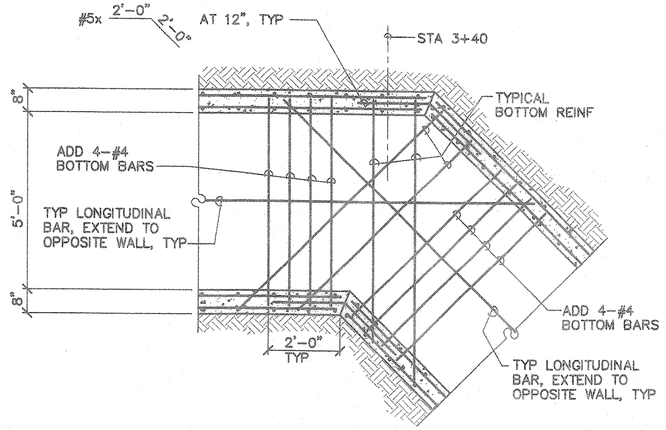

FOUNDATION PLAN

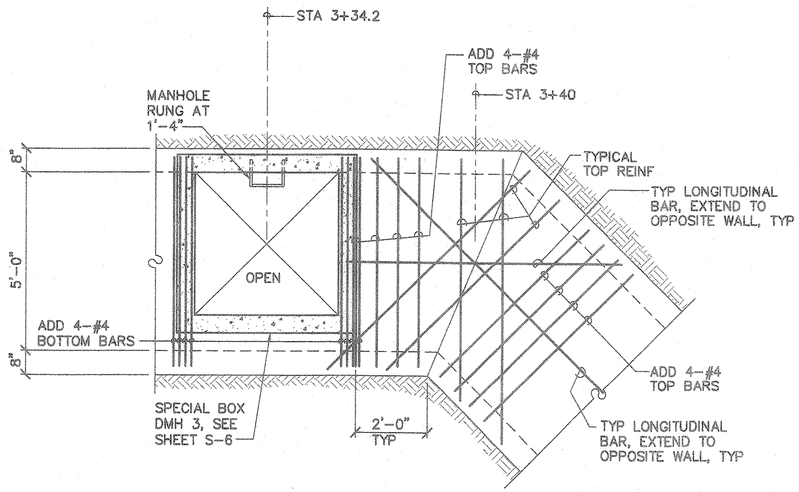

TOP PLAN AT CULVERT

NOTES:

1. MANHOLE SHALL HAVE DEPARTMENT OF PUBLIC WORKS TYPE "DA" FRAME AND COVER.
2. RUNGS SHALL BE ¾" DIAMETER ASTM A36 STEEL RODS, HOT-DIPPED GALVANIZED AND DEPARTMENT OF PUBLIC WORKS TYPE "B". LOWEST RUNG SHALL BE NOT MORE THAN 2'-0" ABOVE THE INVERT.
3. PROVIDE WATERSTOP AT ALL JOINTS.

CULVERT BEND AT ILALO STREET – STA. 3+40 (KOULA STREET – STA. 9+89 SIMILAR)

1 / S-5 SCALE: 1/2"=1'-0"

APPROVED: DATE: 7/18/00

Chief, Civil Engineering Branch, DPP

REVISION	DATE	DESCRIPTION	MADE BY	APPROVED

Planning – Engineering – Environmental Services – Photogrammetry – Surveying – Construction Management
R. M. TOWILL CORPORATION
808 842 1133 420 Waiakamilo Road Suite 411 Honolulu Hawaii 96817-4941

REN KAZUO HAYASHIDA LICENSED PROFESSIONAL ENGINEER No. 6518-S HAWAII, U.S.A.

THIS WORK WAS PREPARED BY ME OR UNDER MY SUPERVISION.

HAWAII COMMUNITY DEVELOPMENT AUTHORITY
STATE OF HAWAII
HONOLULU, HAWAII

KAKA'AKO COMMUNITY DEVELOPMENT DISTRICT
IMPROVEMENT DISTRICT 9
ILALO STREET IMPROVEMENTS
CULVERT BEND PLANS

ENGINEER: SK CHECKED BY: KKH
DRAFTSMAN: DO, DA, KS DATE: JULY 13, 2000

EXECUTIVE DIRECTOR, HAWAII COMMUNITY DEVELOPMENT AUTHORITY

FILE	POCKET	FOLDER	NO.

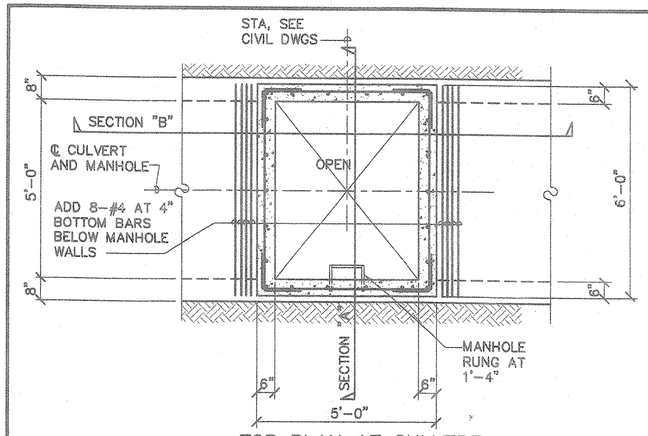

TOP PLAN AT CULVERT

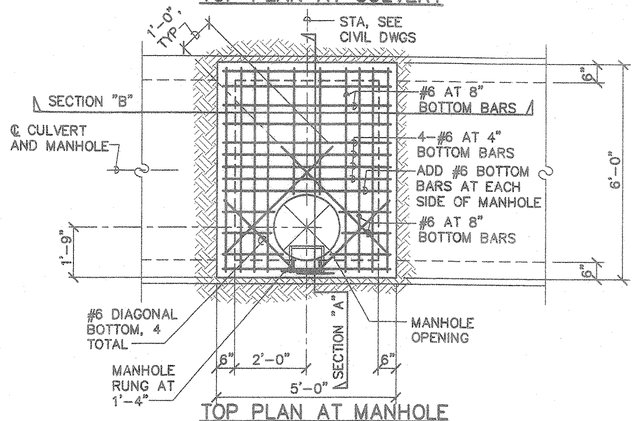

TOP PLAN AT MANHOLE

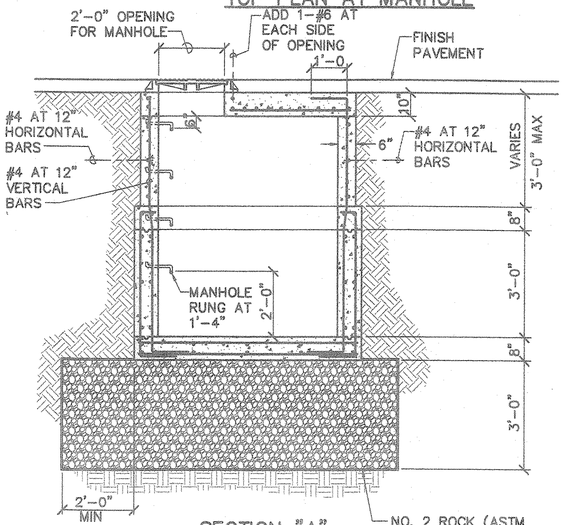

SECTION "A"

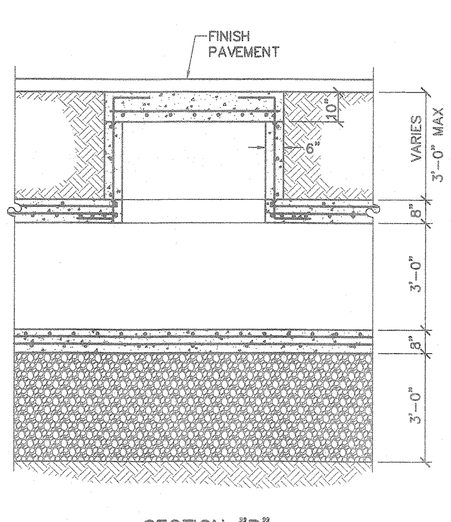

SECTION "B"

NOTES:

1. MANHOLE SHALL HAVE DEPARTMENT OF PUBLIC WORKS TYPE "DA" FRAME AND COVER.
2. RUNGS SHALL BE ¾" DIAMETER ASTM A36 STEEL RODS, HOT-DIPPED GALVANIZED AND DEPARTMENT OF PUBLIC WORKS TYPE "B". LOWEST RUNG SHALL BE NOT MORE THAN 2'-0" ABOVE THE INVERT.
3. PROVIDE WATERSTOP AT ALL JOINTS
4. SEE SHEET S-3 FOR BOX DRAIN REINFORCEMENT.

1 / S-6 SPECIAL BOX DMH 1

SCALE: 1/2"=1'-0"

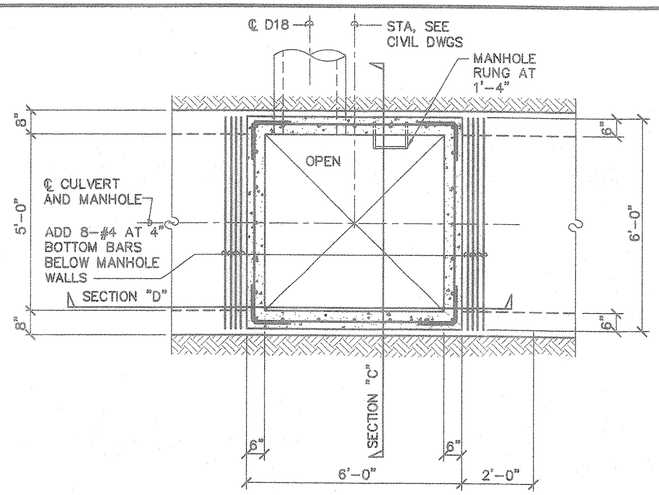

TOP PLAN AT CULVERT

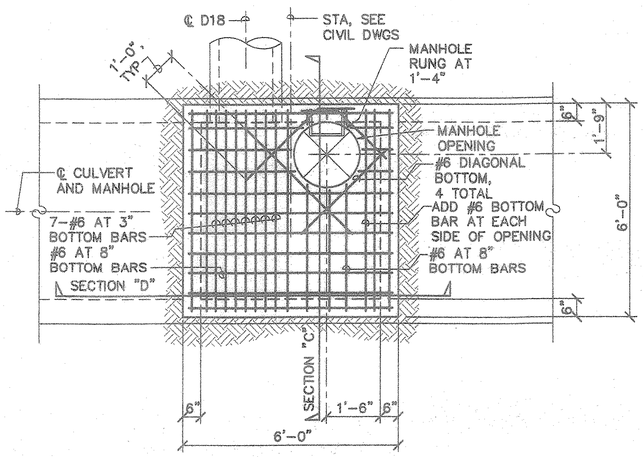

TOP PLAN AT MANHOLE

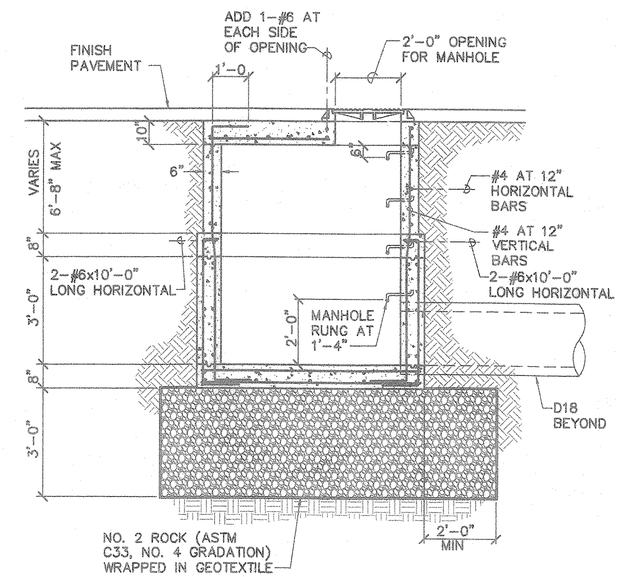

SECTION "C"

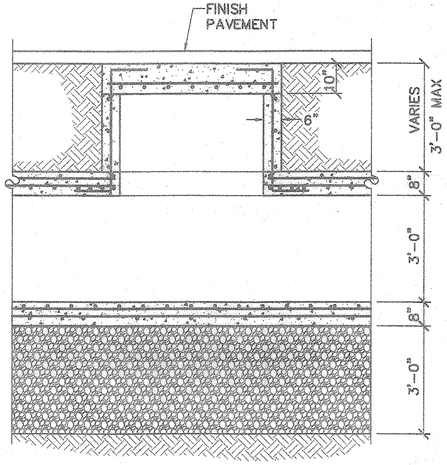

SECTION "D"

NOTES:

1. MANHOLE SHALL HAVE DEPARTMENT OF PUBLIC WORKS TYPE "DA" FRAME AND COVER.
2. RUNGS SHALL BE ¾" DIAMETER ASTM A36 STEEL RODS, HOT-DIPPED GALVANIZED AND DEPARTMENT OF PUBLIC WORKS TYPE "B". LOWEST RUNG SHALL BE NOT MORE THAN 2'-0" ABOVE THE INVERT.
3. PROVIDE WATERSTOP AT ALL JOINTS.
4. SEE SHEET S-3 FOR BOX DRAIN REINFORCEMENT.

2 / S-6 SPECIAL BOX DMH 2, 3, 4, AND 5

SCALE: 1/2"=1'-0"

APPROVED: DATE: 7/18/00

Chief, Civil Engineering Branch, DPP

REVISION	DATE	DESCRIPTION	MADE BY	APPROVED

Planning - Engineering - Environmental Services - Photogrammetry - Surveying - Construction Management

R. M. TOWILL CORPORATION

808 842 1133 420 Waiakamilo Road Suite 411 Honolulu Hawaii 96817-4941

KEN KAZUO HAYASHIDA LICENSED PROFESSIONAL ENGINEER No. 6816-S HAWAII, U.S.A.

THIS WORK WAS PREPARED BY ME OR UNDER MY SUPERVISION.

HAWAII COMMUNITY DEVELOPMENT AUTHORITY
STATE OF HAWAII
HONOLULU, HAWAII

KAKA'AKO COMMUNITY DEVELOPMENT DISTRICT
IMPROVEMENT DISTRICT 9
ILALO STREET IMPROVEMENTS

SPECIAL BOX DMH 1,2,3,4 & 5
PLAN AT CULVERT, TOP PLAN AND SECTIONS

ENGINEER: SK CHECKED BY: KKH
DRAFTSMAN: DO, DA, KS DATE: JULY 13, 2000

EXECUTIVE DIRECTOR, HAWAII COMMUNITY DEVELOPMENT AUTHORITY

FILE	POCKET	FOLDER	NO.

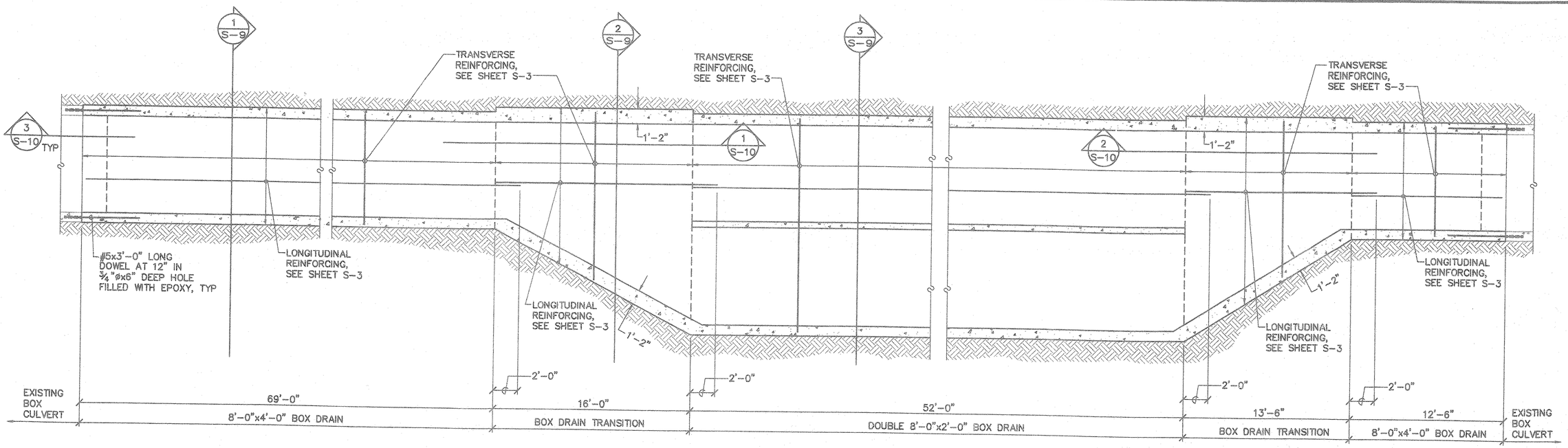

1 S-7 **FOUNDATION PLAN**
SCALE: 1/4"=1'-0"

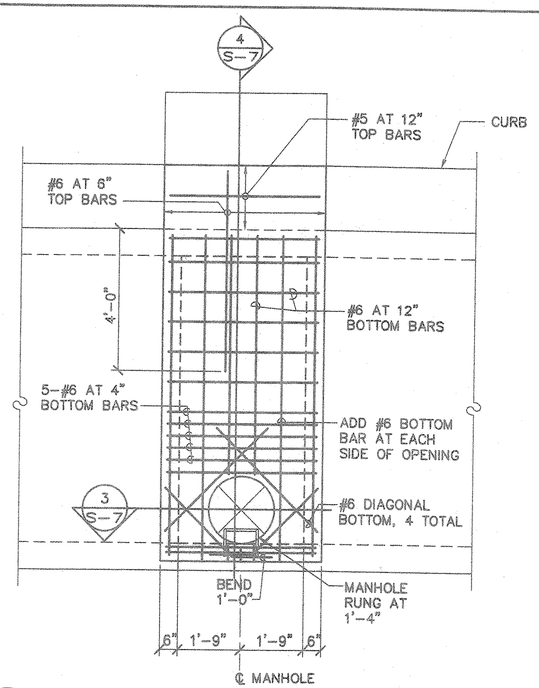

2 S-7 **SPECIAL CATCH BASIN 24 TOP PLAN**
SCALE: 1/2"=1'-0"

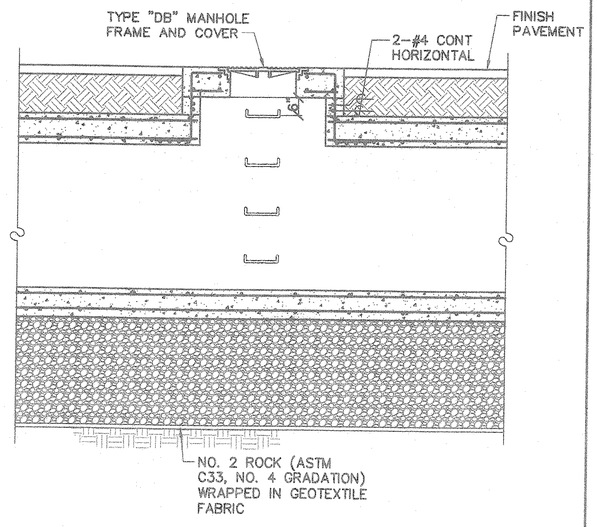

3 S-7 **SECTION**
SCALE: 1/2"=1'-0"

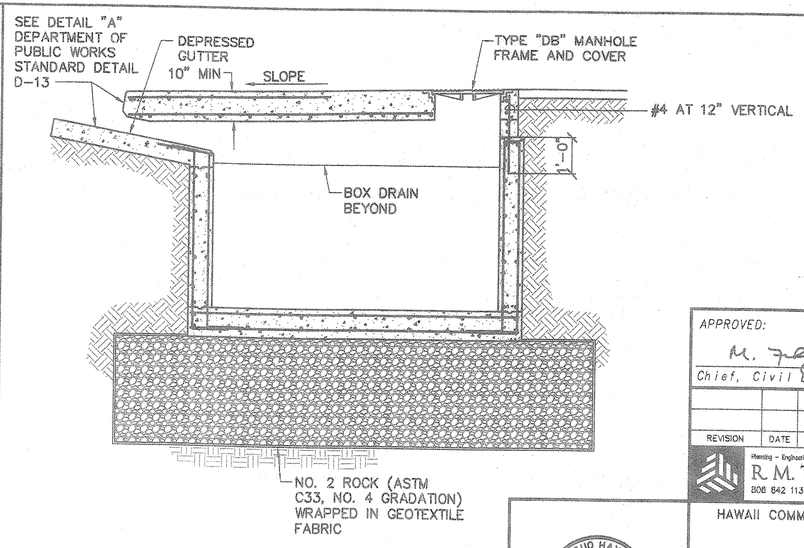

4 S-7 **SECTION**
SCALE: 1/2"=1'-0"

APPROVED: DATE: 7/19/00
Chief, Civil Engineering Branch, DPP

REVISION	DATE	DESCRIPTION	MADE BY	APPROVED

Planning – Engineering – Environmental Services – Photogrammetry – Surveying – Construction Management
R. M. TOWILL CORPORATION
808 842 1133 420 Waiakamilo Road Suite 411 Honolulu Hawaii 96817-4941

KEN KAZUO HAYASHIDA LICENSED PROFESSIONAL ENGINEER No. 6616-S HAWAII, U.S.A.

THIS WORK WAS PREPARED BY ME OR UNDER MY SUPERVISION.

HAWAII COMMUNITY DEVELOPMENT AUTHORITY
STATE OF HAWAII
HONOLULU, HAWAII
KAKA'AKO COMMUNITY DEVELOPMENT DISTRICT
IMPROVEMENT DISTRICT 9
ILALO STREET IMPROVEMENTS
BOX DRAIN FOUNDATION PLAN

ENGINEER: SK CHECKED BY: KKH
DRAFTSMAN: DO, DA, KS DATE: JULY 13, 2000

EXECUTIVE DIRECTOR, HAWAII COMMUNITY DEVELOPMENT AUTHORITY

"RECORD DRAWINGS" S-7 SHEET 66 OF 140 SHEETS

FILE	POCKET	FOLDER	NO.

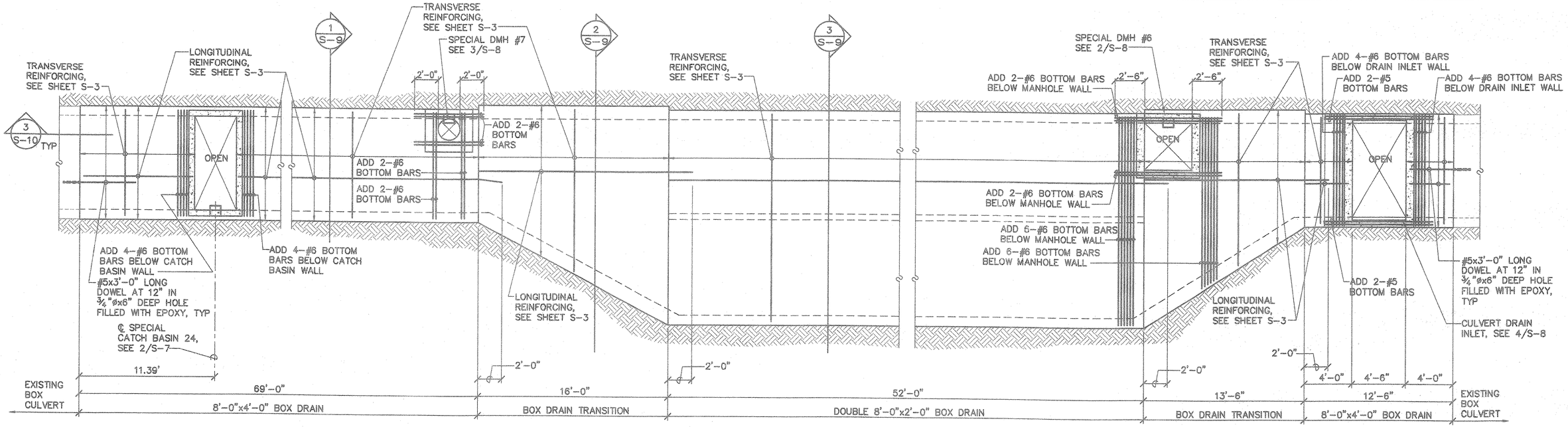

1 S-8 BOX DRAIN TOP PLAN
SCALE: 1/4"=1'-0"

NOTES:

1. MANHOLES SHALL HAVE DEPARTMENT OF PUBLIC WORKS TYPE "DA" AND "DB" FRAME AND COVER WHERE CALLED FOR IN THE DETAILS.
2. RUNGS SHALL BE 3/4" DIAMETER ASTM A36 STEEL RODS, HOT-DIPPED GALVANIZED AND DEPARTMENT OF PUBLIC WORKS TYPE "B". LOWEST RUNG SHALL BE NOT MORE THAN 2'-0" ABOVE THE INVERT.
3. PROVIDE WATERSTOP AT ALL JOINTS.

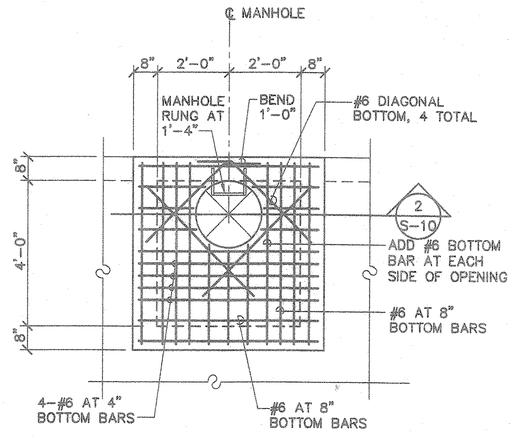

2 S-8 SPECIAL DMH #6 TOP PLAN
SCALE: 1/2"=1'-0"

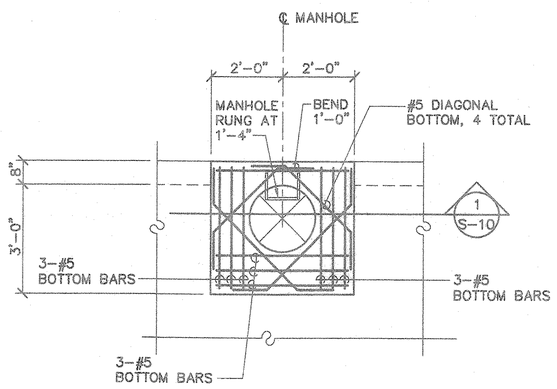

3 S-8 SPECIAL DMH #7 TOP PLAN
SCALE: 1/2"=1'-0"

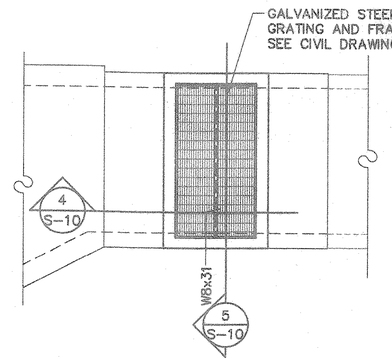

4 S-8 CULVERT DRAIN INLET TOP PLAN
SCALE: 1/2"=1'-0"

APPROVED: DATE: 7/18/00
Chief, Civil Engineering Branch, DPP

REVISION	DATE	DESCRIPTION	MADE BY	APPROVED

Planning - Engineering - Environmental Services - Photogrammetry - Surveying - Construction Management
R. M. TOWILL CORPORATION
808 842 1133 420 Waiakamilo Road Suite 411 Honolulu Hawaii 96817-4941

KEIN KAZUO HAYASHIDA LICENSED PROFESSIONAL ENGINEER No. 6818-S HAWAII, U.S.A.

THIS WORK WAS PREPARED BY ME OR UNDER MY SUPERVISION.

HAWAII COMMUNITY DEVELOPMENT AUTHORITY
STATE OF HAWAII
HONOLULU, HAWAII
KAKA'AKO COMMUNITY DEVELOPMENT DISTRICT
IMPROVEMENT DISTRICT 9
!LALO STREET IMPROVEMENTS
BOX DRAIN ROOF FRAMING PLAN

ENGINEER: SK
DRAFTSMAN: DO, DA, KS
CHECKED BY: KKH
DATE: JULY 13, 2000

EXECUTIVE DIRECTOR, HAWAII COMMUNITY DEVELOPMENT AUTHORITY

FILE	POCKET	FOLDER	NO.

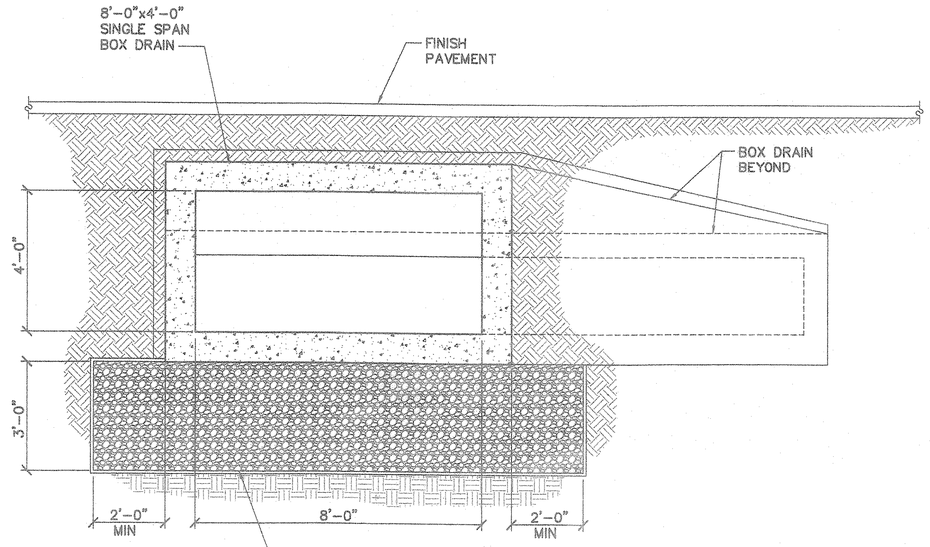

1 S-9 SECTION
SCALE: 1/2"=1'-0"

NOTE:

SEE 1/S-3 FOR
BOX DRAIN DIMENSIONS
AND REINFORCING.

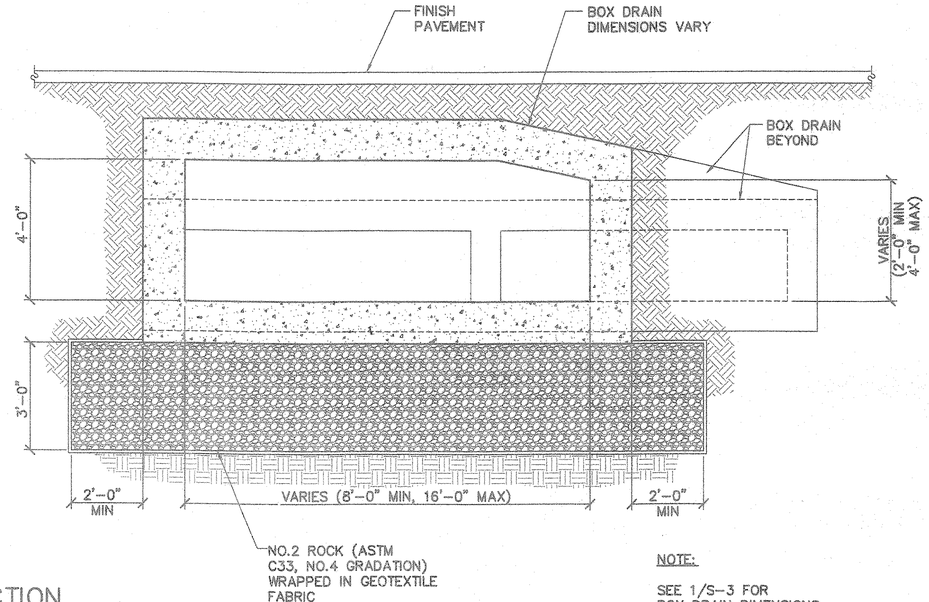

2 S-9 SECTION
SCALE: 1/2"=1'-0"

NOTE:

SEE 1/S-3 FOR
BOX DRAIN DIMENSIONS
AND REINFORCING.

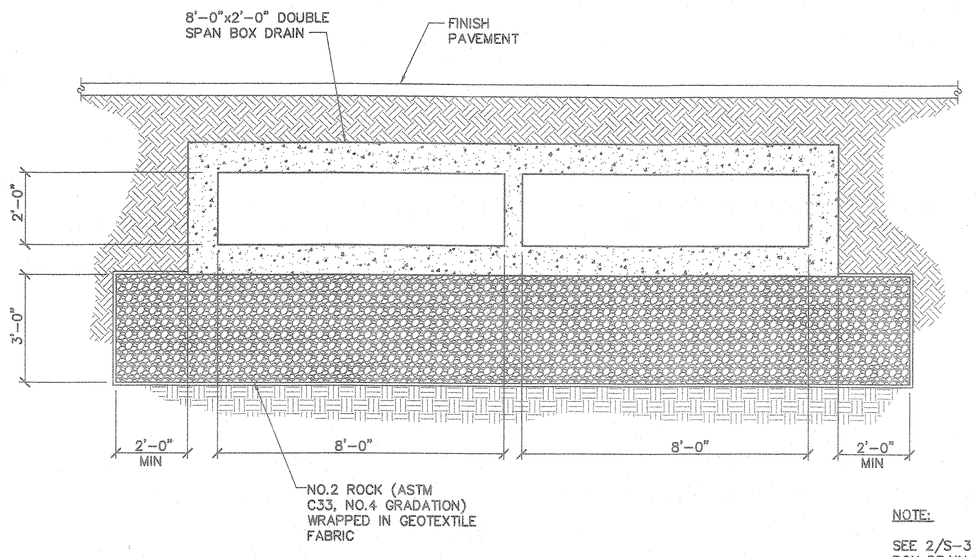

3 S-9 SECTION
SCALE: 1/2"=1'-0"

NOTE:

SEE 2/S-3 FOR
BOX DRAIN DIMENSIONS
AND REINFORCING.

APPROVED: DATE: 7/18/00

Chief, Civil Engineering Branch, DPP

REVISION	DATE	DESCRIPTION	MADE BY	APPROVED

Planning - Engineering - Environmental Services - Photogrammetry - Surveying - Construction Management
R. M. TOWILL CORPORATION
808 842 1133 420 Waiakamilo Road Suite 411 Honolulu Hawaii 96817-4941

KEN KAZUO HAYASHIDA
LICENSED PROFESSIONAL ENGINEER
No. 6818-S
HAWAII, U.S.A.

THIS WORK WAS PREPARED BY
ME OR UNDER MY SUPERVISION.

HAWAII COMMUNITY DEVELOPMENT AUTHORITY
STATE OF HAWAII
HONOLULU, HAWAII

KAKA'AKO COMMUNITY
DEVELOPMENT DISTRICT
IMPROVEMENT DISTRICT 9

ILALO STREET IMPROVEMENTS

BOX DRAIN SECTIONS

ENGINEER: SK
DRAFTSMAN: DO, DA, KS
CHECKED BY: KKH
DATE: JULY 13, 2000

EXECUTIVE DIRECTOR, HAWAII COMMUNITY DEVELOPMENT AUTHORITY

FILE	POCKET	FOLDER	NO.

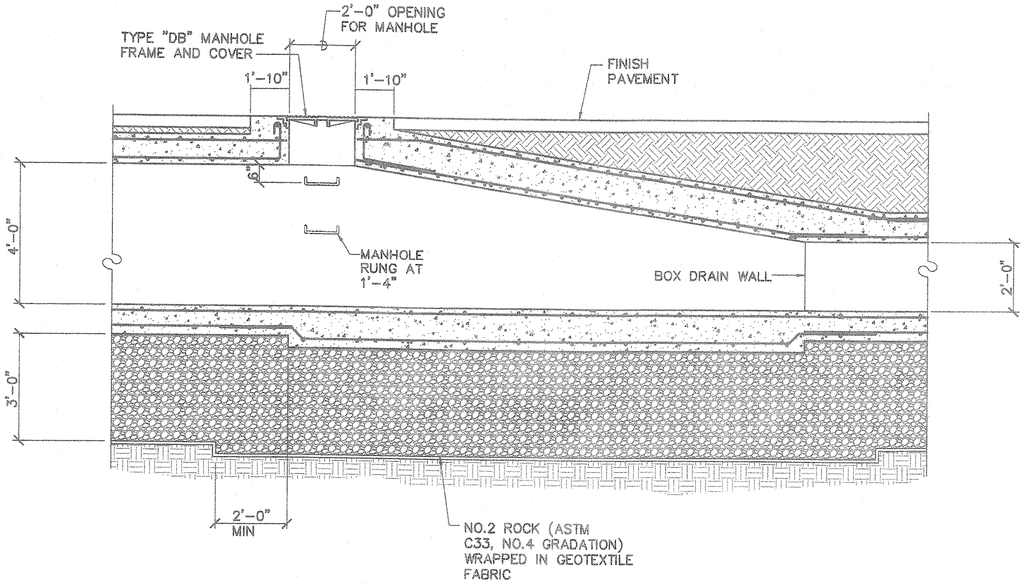

1 S-10 SECTION
SCALE: 1/2"=1'-0"

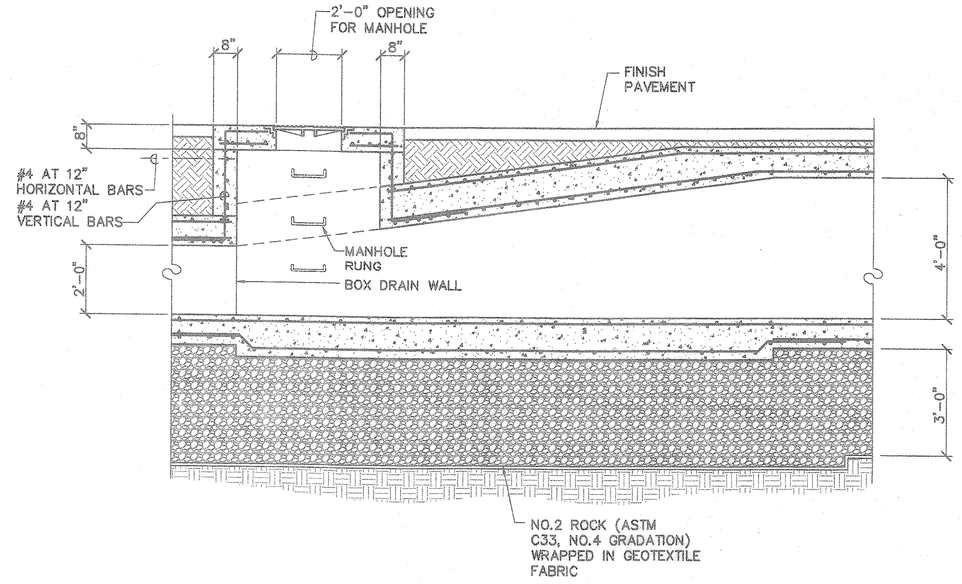

2 S-10 SECTION
SCALE: 1/2"=1'-0"

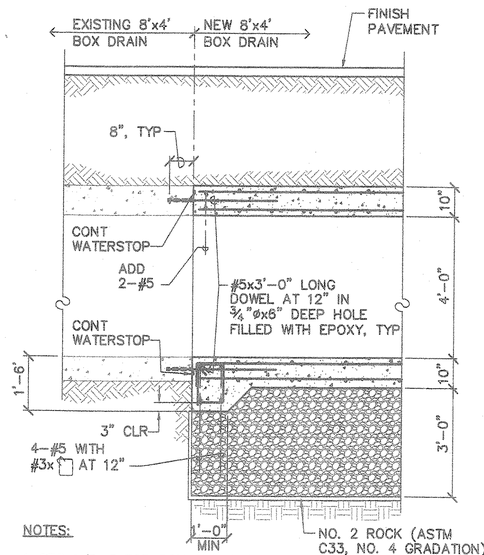

NOTES:
1. SEE 1/S-3 FOR BOX CULVERT REINFORCING
2. ROUGHEN, CLEAN, AND APPLY EPOXY BONDING AGENT TO EXISTING CONCRETE SURFACE PRIOR TO NEW CONCRETE POUR, TYP ALL AROUND

3 S-10 SECTION
SCALE: 1/2"=1'-0"

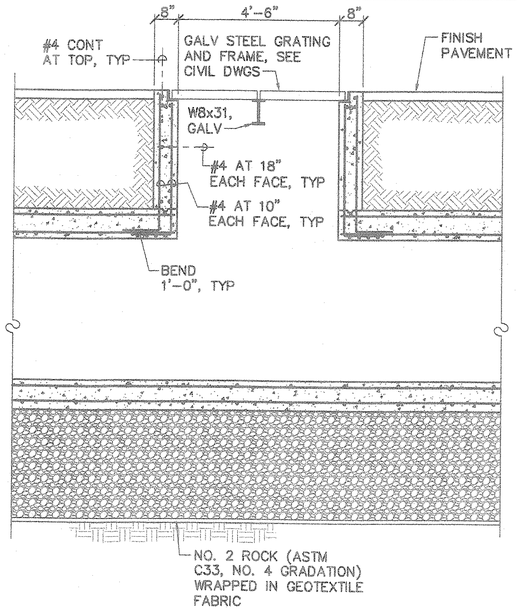

4 S-10 SECTION
SCALE: 1/2"=1'-0"

NOTE:
SEE 1/S-3 FOR BOX CULVERT REINFORCING

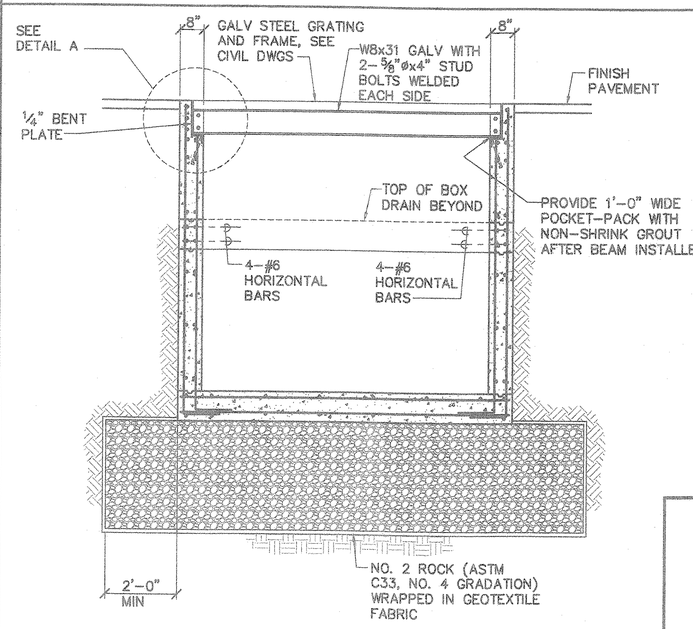

5 S-10 SECTION
SCALE: 1/2"=1'-0"

NOTE:
SEE 1/S-3 FOR BOX CULVERT REINFORCING

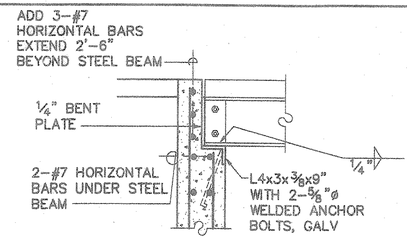

DETAIL A

APPROVED: DATE: 7/18/00
Chief, Civil Engineering Branch, DPP

REVISION	DATE	DESCRIPTION	MADE BY	APPROVED

Planning – Engineering – Environmental Services – Photogrammetry – Surveying – Construction Management
R. M. TOWILL CORPORATION
808 842 1133 420 Waiakamilo Road Suite 411 Honolulu Hawaii 96817-4941

KEN KAZUO HAYASHIDA LICENSED PROFESSIONAL ENGINEER No. 6818-S HAWAII, U.S.A.

THIS WORK WAS PREPARED BY ME OR UNDER MY SUPERVISION.

HAWAII COMMUNITY DEVELOPMENT AUTHORITY
STATE OF HAWAII
HONOLULU, HAWAII
KAKA'AKO COMMUNITY DEVELOPMENT DISTRICT
IMPROVEMENT DISTRICT 9
ILALO STREET IMPROVEMENTS
BOX DRAIN SECTIONS

ENGINEER: SK
DRAFTSMAN: DO, DA, KS
CHECKED BY: KKH
DATE: JULY 13, 2000

EXECUTIVE DIRECTOR, HAWAII COMMUNITY DEVELOPMENT AUTHORITY

FILE	POCKET	FOLDER	NO.

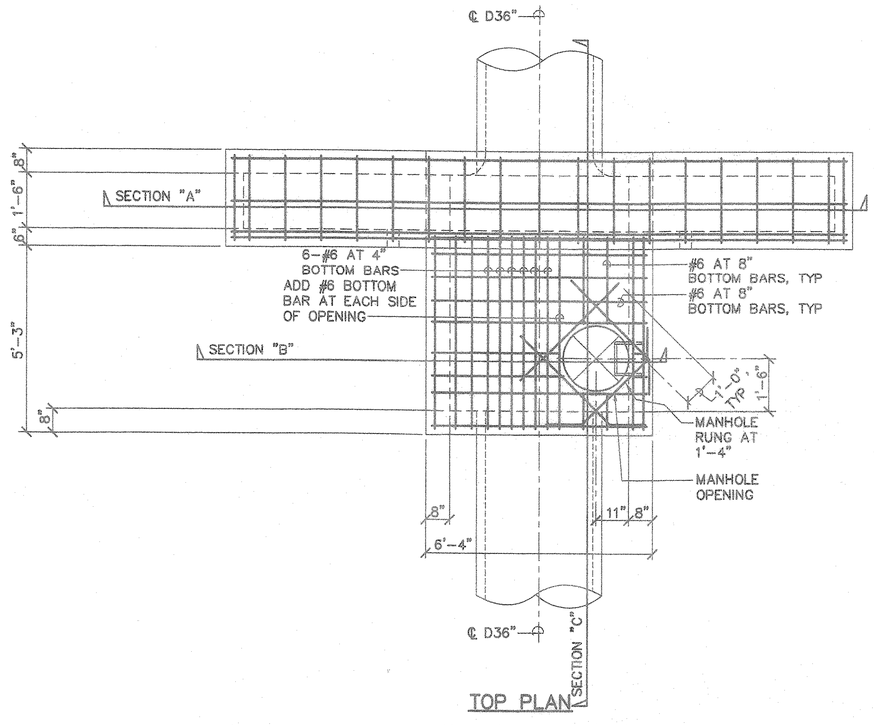

TOP PLAN

NOTES:

1. MODIFIED TYPE "F" CATCH BASIN. SEE DEPARTMENT OF PUBLIC WORKS STANDARD DETAILS D-7 AND D-8 FOR SIZES AND REINFORCING NOT SHOWN.
2. MANHOLE SHALL HAVE DEPARTMENT OF PUBLIC WORKS TYPE "DA" FRAME AND COVER.
3. RUNGS SHALL BE ¾" DIAMETER ASTM A36 STEEL RODS, HOT-DIPPED GALVANIZED AND DEPARTMENT OF PUBLIC WORKS TYPE "B". LOWEST RUNG SHALL BE NOT MORE THAN 2'-0" ABOVE THE INVERT.
4. PROVIDE WATERSTOP AT ALL JOINTS.

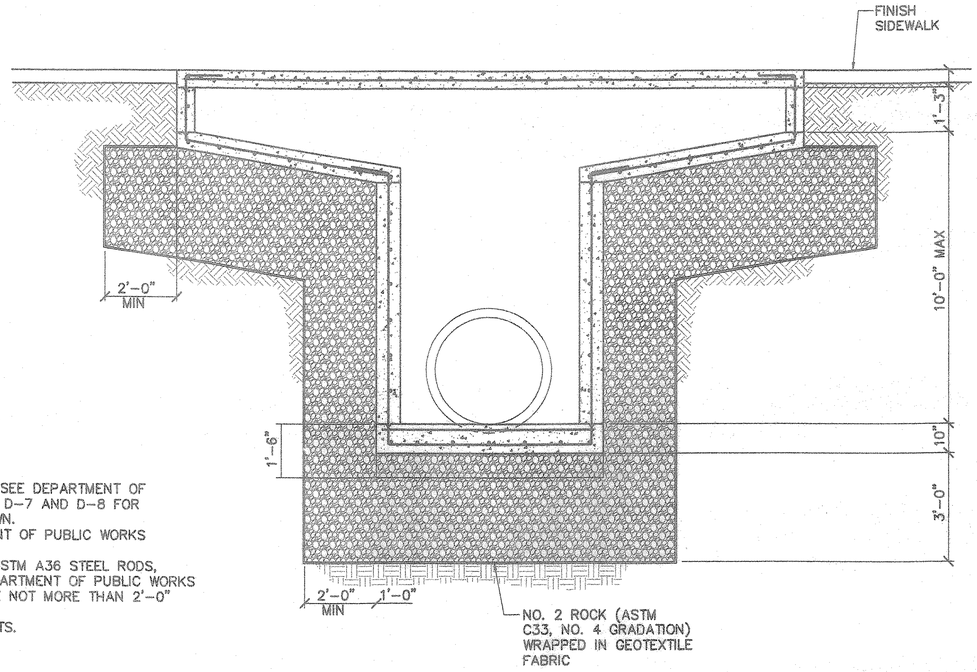

SECTION "A"

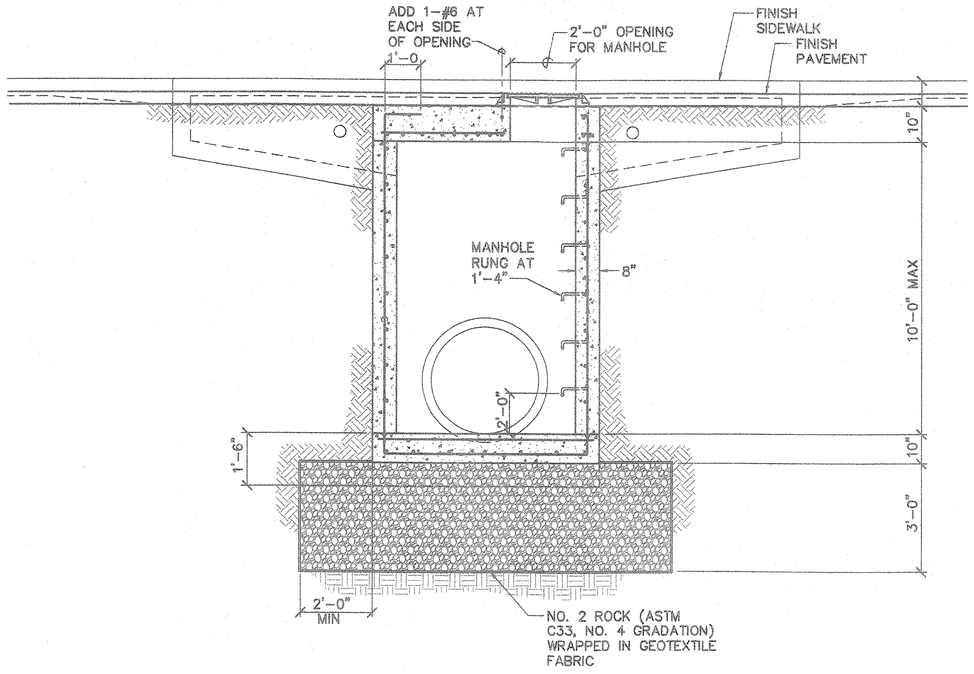

SECTION "B"

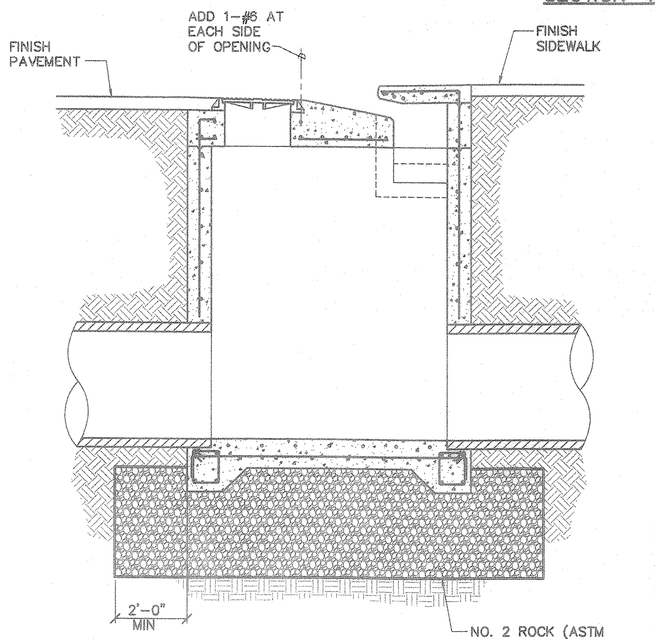

SECTION "C"

1 / S-11 SPECIAL CATCH BASIN 7
SCALE: 1/2"=1'-0"

APPROVED: DATE: 7/10/00
Chief, Civil Engineering Branch, DPP

REVISION	DATE	DESCRIPTION	MADE BY	APPROVED

Planning - Engineering - Environmental Services - Photogrammetry - Surveying - Construction Management
R. M. TOWILL CORPORATION
808 842 1133 420 Waiakamilo Road Suite 411 Honolulu Hawaii 96817-4941

KENT KAZUO HAYASHIDA LICENSED PROFESSIONAL ENGINEER No. 6818-S HAWAII, U.S.A.

THIS WORK WAS PREPARED BY ME OR UNDER MY SUPERVISION.

HAWAII COMMUNITY DEVELOPMENT AUTHORITY
STATE OF HAWAII
HONOLULU, HAWAII

KAKA'AKO COMMUNITY DEVELOPMENT DISTRICT
IMPROVEMENT DISTRICT 9
ILALO STREET IMPROVEMENTS

SPECIAL CATCH BASIN 7
PLAN AND SECTIONS

ENGINEER: SK CHECKED BY: KKH
DRAFTSMAN: DO, DA, KS DATE: JULY 13, 2000

EXECUTIVE DIRECTOR, HAWAII COMMUNITY DEVELOPMENT AUTHORITY

FILE	POCKET	FOLDER	NO.

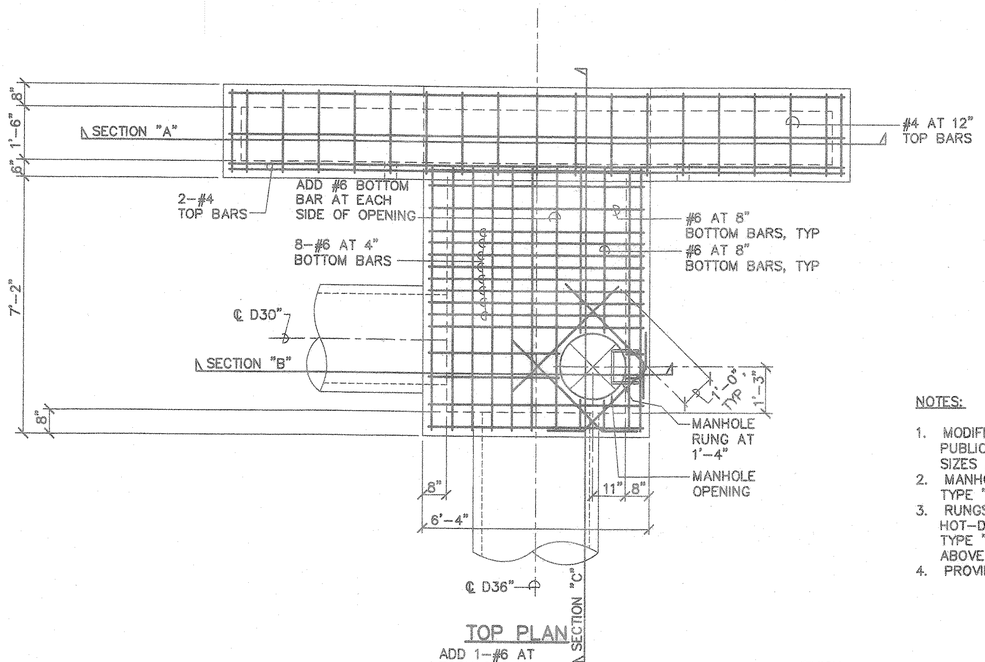

TOP PLAN

NOTES:

1. MODIFIED TYPE "F" CATCH BASIN. SEE DEPARTMENT OF PUBLIC WORKS STANDARD DETAILS D-7 AND D-8 FOR SIZES AND REINFORCING NOT SHOWN.
2. MANHOLE SHALL HAVE DEPARTMENT OF PUBLIC WORKS TYPE "DA" FRAME AND COVER.
3. RUNGS SHALL BE ¾" DIAMETER ASTM A36 STEEL RODS, HOT-DIPPED GALVANIZED AND DEPARTMENT OF PUBLIC WORKS TYPE "B". LOWEST RUNG SHALL BE NOT MORE THAN 2'-0" ABOVE THE INVERT.
4. PROVIDE WATERSTOP AT ALL JOINTS.

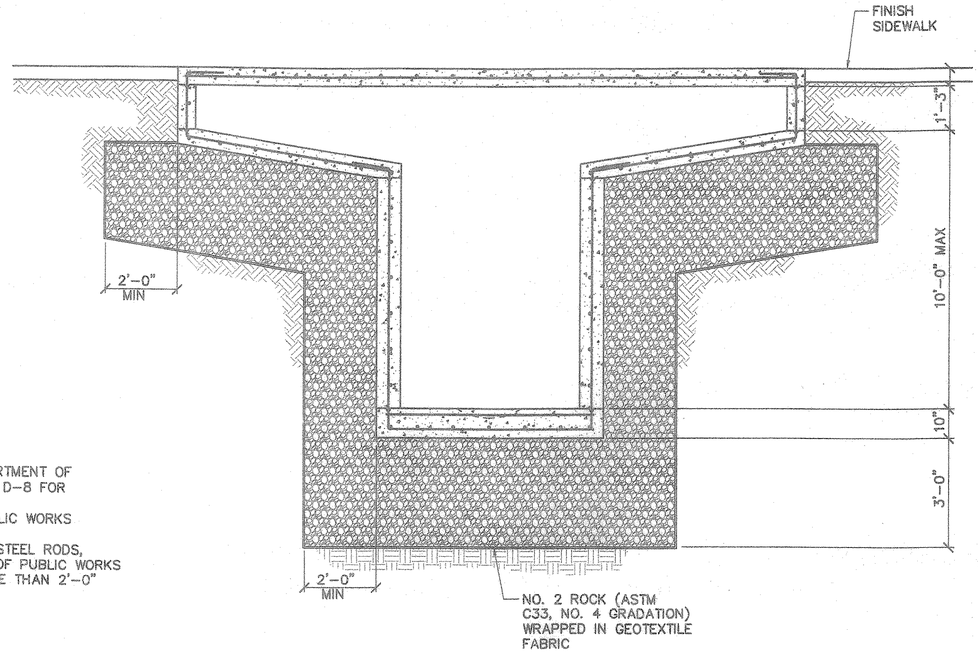

SECTION "A"

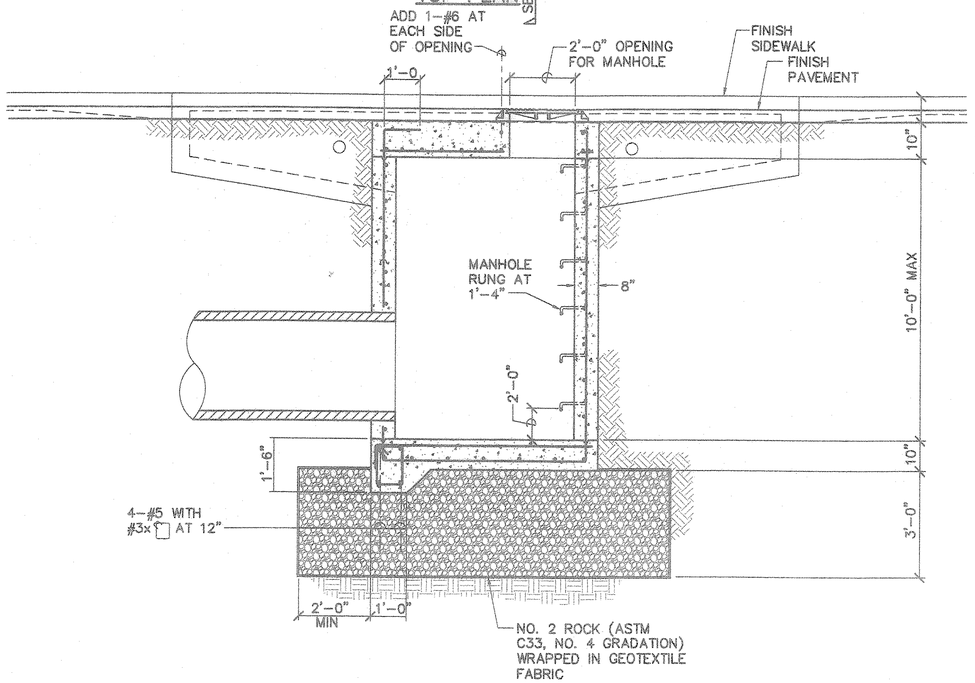

SECTION "B"

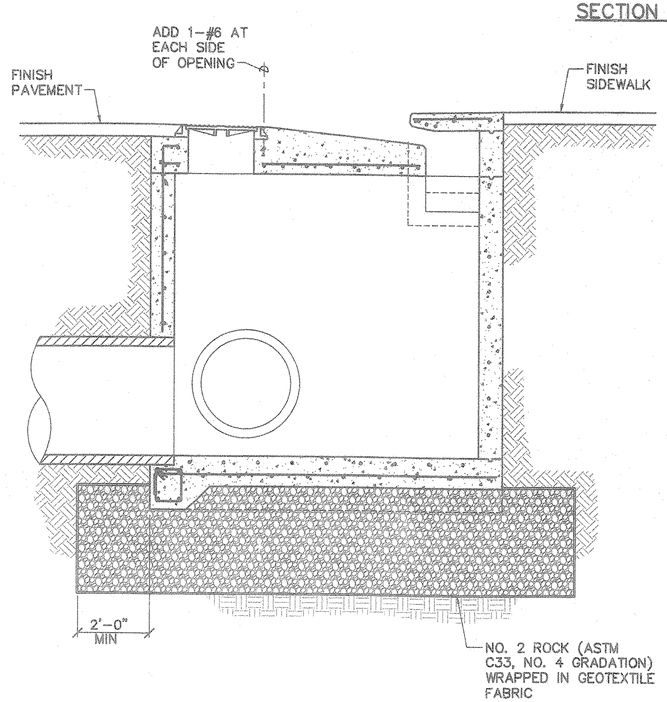

SECTION "C"

1 / S-12 SPECIAL CATCH BASIN 8
SCALE: 1/2"=1'-0"

APPROVED: DATE: 7/18/00
Chief, Civil Engineering Branch, DPP

REVISION	DATE	DESCRIPTION	MADE BY	APPROVED

Planning - Engineering - Environmental Services - Photogrammetry - Surveying - Construction Management
R. M. TOWILL CORPORATION
808 842 1133 420 Waiakamilo Road Suite 411 Honolulu Hawaii 96817-4941

KEN KAZUO HAYASHIDA LICENSED PROFESSIONAL ENGINEER No. 6818-S HAWAII, U.S.A.

THIS WORK WAS PREPARED BY ME OR UNDER MY SUPERVISION.

HAWAII COMMUNITY DEVELOPMENT AUTHORITY
STATE OF HAWAII
HONOLULU, HAWAII

KAKA'AKO COMMUNITY DEVELOPMENT DISTRICT
IMPROVEMENT DISTRICT 9
ILALO STREET IMPROVEMENTS

SPECIAL CATCH BASIN 8
PLAN AND SECTIONS

ENGINEER: SK CHECKED BY: KKH
DRAFTSMAN: DO, DA, KS DATE: JULY 13, 2000

EXECUTIVE DIRECTOR, HAWAII COMMUNITY DEVELOPMENT AUTHORITY

FILE	POCKET	FOLDER	NO.

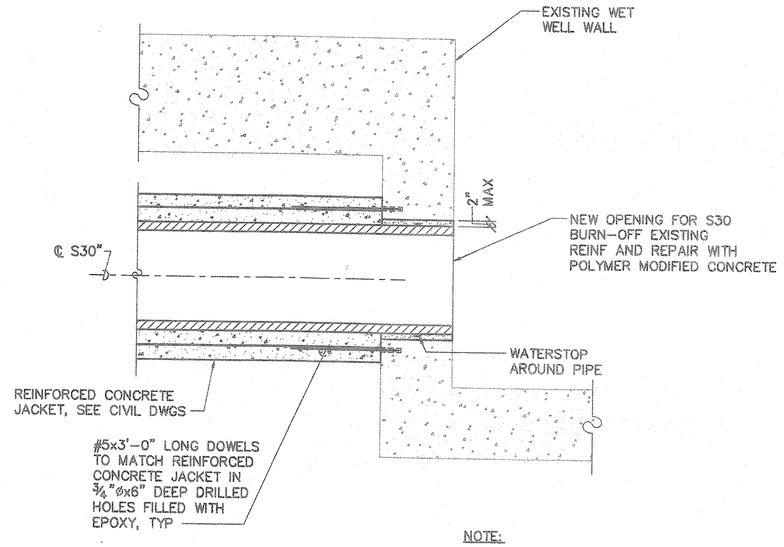

NOTE:

SEE CIVIL DRAWINGS FOR LOCATION AND INVERT OF S30.

1 / S-13 PLAN
SCALE: 1/2"=1'-0"

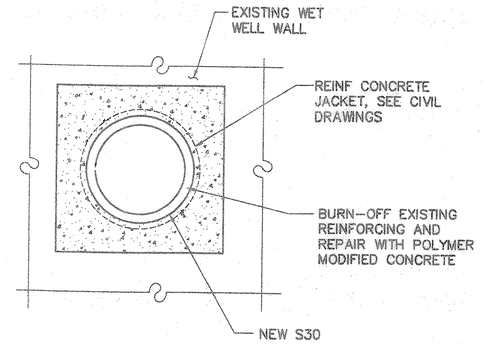

2 / S-13 ELEVATION
SCALE: 1/2"=1'-0"

APPROVED: DATE:

Dennis M. Nakamura 7/25/00
Chief, Wastewater Branch, DPP HNJ

REVISION	DATE	DESCRIPTION	MADE BY	APPROVED

Planning – Engineering – Environmental Services – Photogrammetry – Surveying – Construction Management
R. M. TOWILL CORPORATION
808 842 1133 420 Waiakamilo Road Suite 411 Honolulu Hawaii 96817-4941

KEN KAZUO HAYASHIDA LICENSED PROFESSIONAL ENGINEER No. 6818-S HAWAII, U.S.A.

THIS WORK WAS PREPARED BY ME OR UNDER MY SUPERVISION.

HAWAII COMMUNITY DEVELOPMENT AUTHORITY
STATE OF HAWAII
HONOLULU, HAWAII

KAKA'AKO COMMUNITY DEVELOPMENT DISTRICT
IMPROVEMENT DISTRICT 9
ILALO STREET IMPROVEMENTS

30" SEWER CONNECTION DETAILS

ENGINEER: SK CHECKED BY: KKH
DRAFTSMAN: DO, DA, KS DATE: JULY 13, 2000

EXECUTIVE DIRECTOR, HAWAII COMMUNITY DEVELOPMENT AUTHORITY

FILE	POCKET	FOLDER	NO.

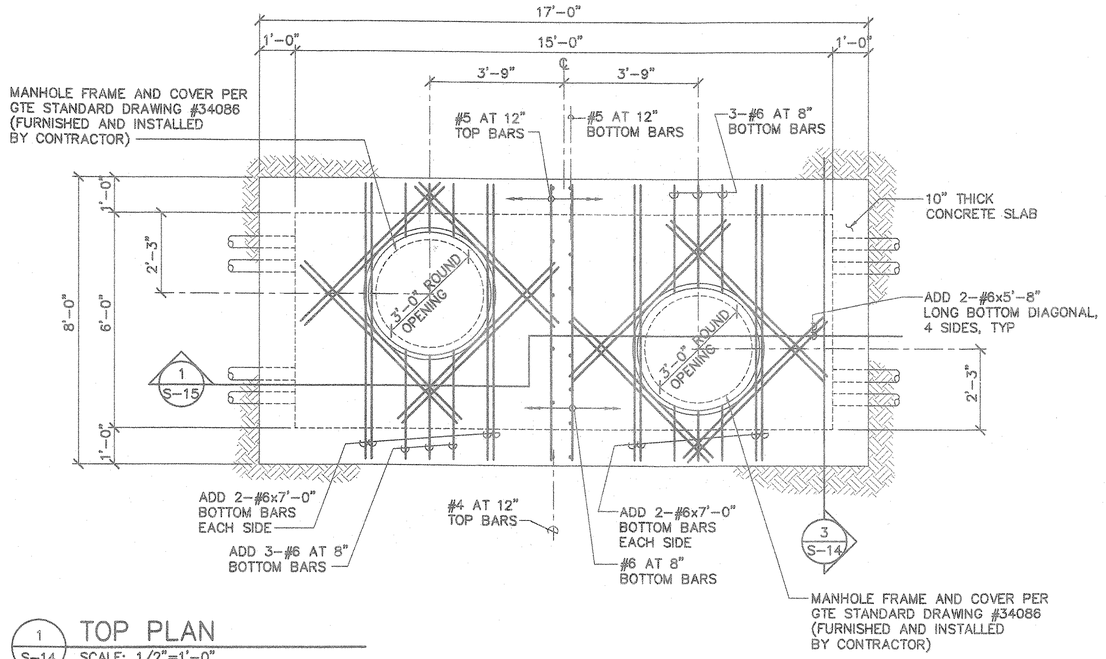

1 S-14 TOP PLAN
SCALE: 1/2"=1'-0"

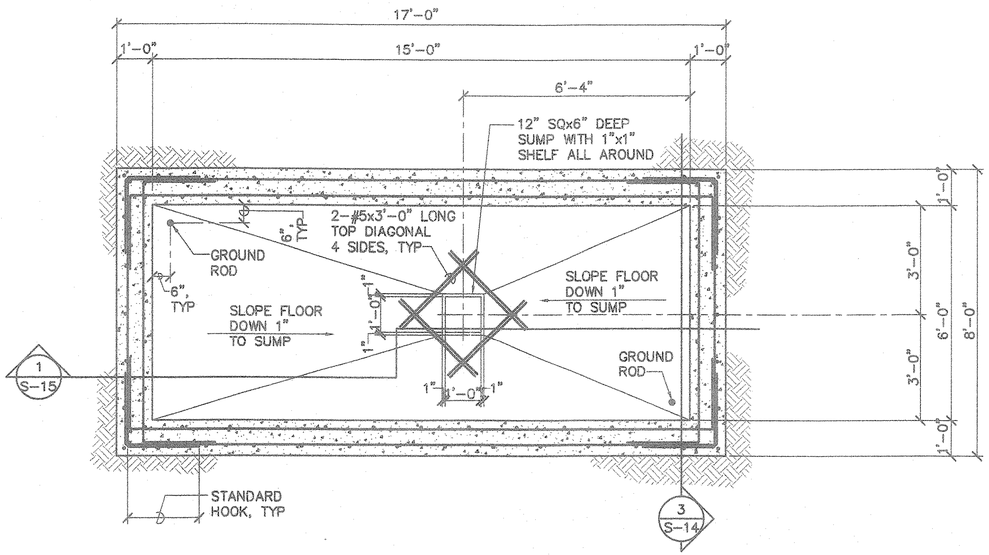

2 S-14 SECTIONAL PLAN
SCALE: 1/2"=1'-0"

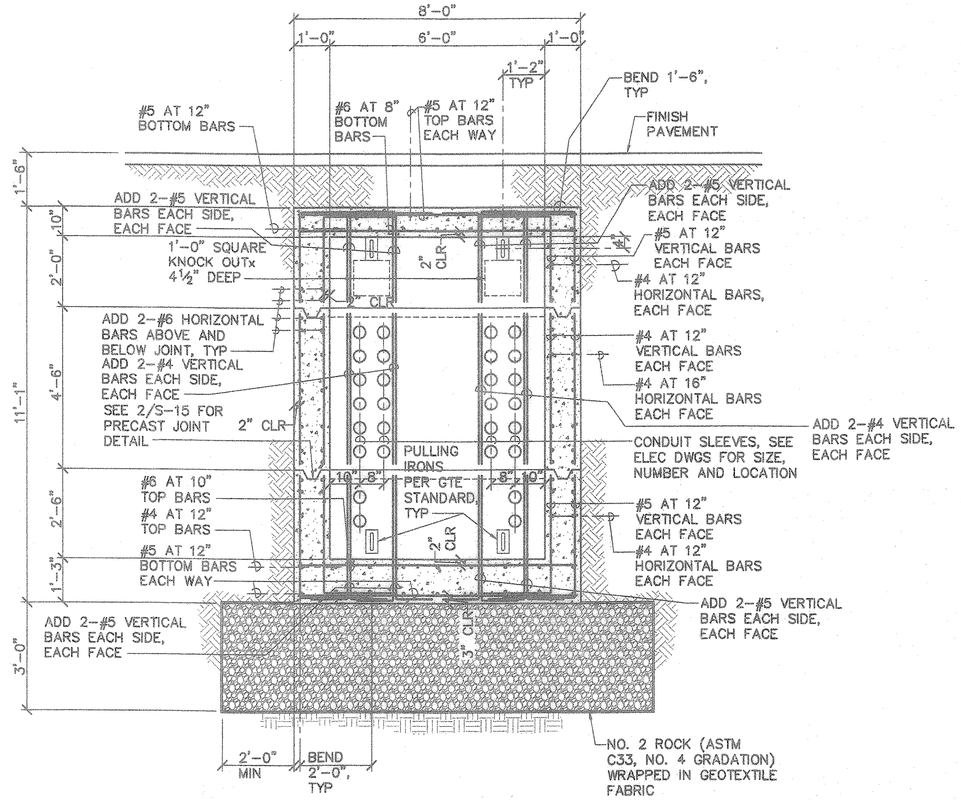

3 S-14 SECTION
SCALE: 1/2"=1'-0"

REVISION	DATE	DESCRIPTION	MADE BY	APPROVED

Planning - Engineering - Environmental Services - Photogrammetry - Surveying - Construction Management
R. M. TOWILL CORPORATION
808 842 1133 420 Waiakamilo Road Suite 411 Honolulu Hawaii 96817-4941

KEN K. HAYASHIDA LICENSED PROFESSIONAL ENGINEER No. 6818-S HAWAII, U.S.A.

THIS WORK WAS PREPARED BY ME OR UNDER MY SUPERVISION.

HAWAII COMMUNITY DEVELOPMENT AUTHORITY
STATE OF HAWAII
HONOLULU, HAWAII

KAKA'AKO COMMUNITY DEVELOPMENT DISTRICT
IMPROVEMENT DISTRICT 9
ILALO STREET IMPROVEMENTS

HTCO SPECIAL TYPE MANHOLE PLANS AND SECTIONS

ENGINEER: SK
DRAFTSMAN: DO, DA, KS
CHECKED BY: KKH
DATE: JULY 13, 2000

EXECUTIVE DIRECTOR, HAWAII COMMUNITY DEVELOPMENT AUTHORITY

FILE	POCKET	FOLDER	NO.

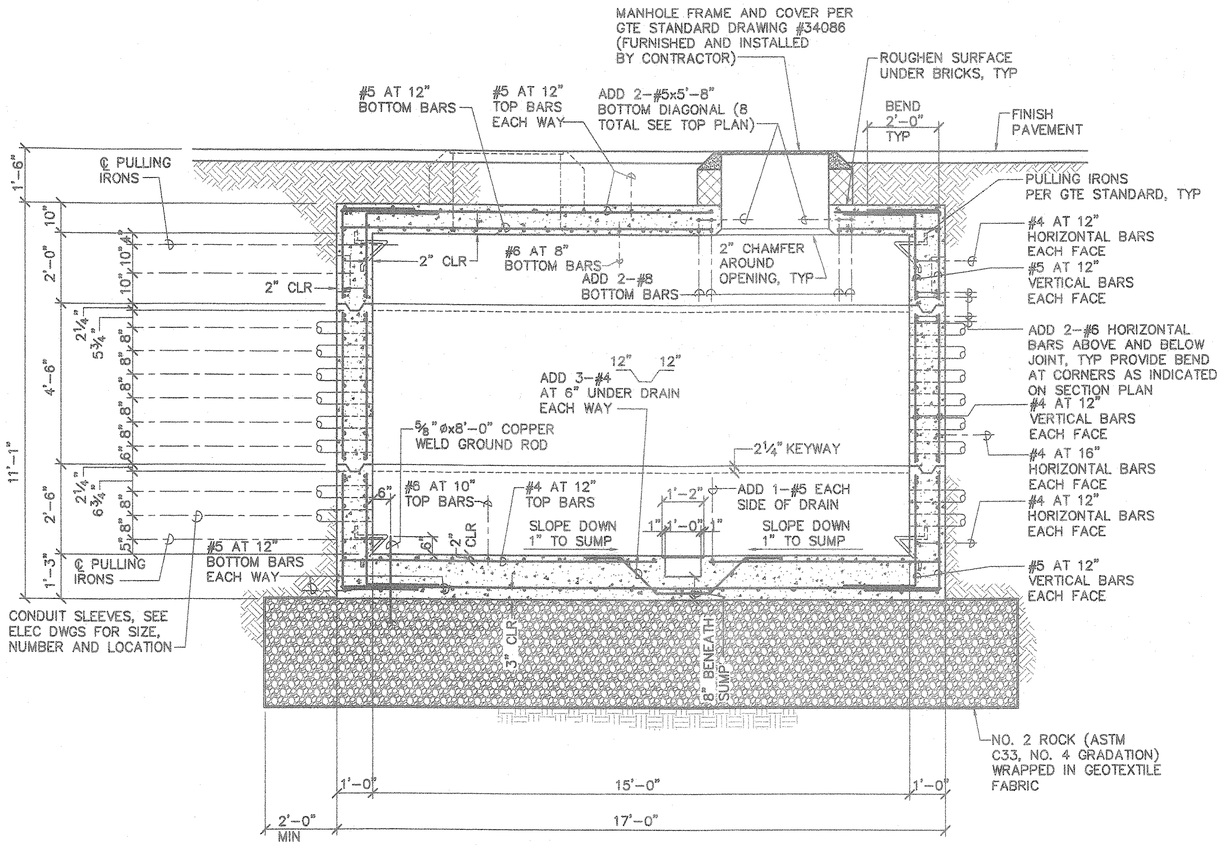

1 S-15 SECTION
SCALE: 1/2"=1'-0"

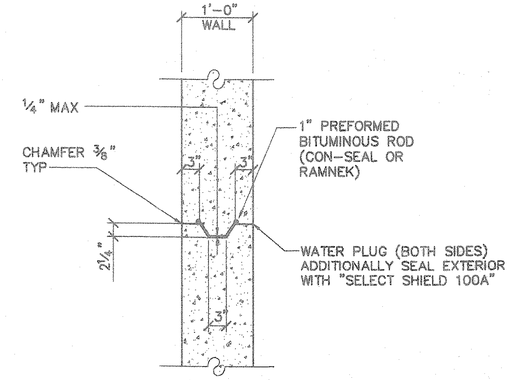

2 S-15 PRECAST JOINT DETAIL
SCALE: 1"=1'-0"

REVISION	DATE	DESCRIPTION	MADE BY	APPROVED

Planning - Engineering - Environmental Services - Photogrammetry - Surveying - Construction Management
R. M. TOWILL CORPORATION
808 842 1133 420 Waiakamilo Road Suite 411 Honolulu Hawaii 96817-4941

KEN KAZUO HAYASHIDA LICENSED PROFESSIONAL ENGINEER No. 8812-S HAWAII, U.S.A.

THIS WORK WAS PREPARED BY ME OR UNDER MY SUPERVISION.

HAWAII COMMUNITY DEVELOPMENT AUTHORITY
STATE OF HAWAII
HONOLULU, HAWAII

KAKA'AKO COMMUNITY DEVELOPMENT DISTRICT
IMPROVEMENT DISTRICT 9
ILALO STREET IMPROVEMENTS

HTCO SPECIAL TYPE MANHOLE SECTION AND DETAIL

ENGINEER: SK
DRAFTSMAN: DO, DA, KS
CHECKED BY: KKH
DATE: JULY 13, 2000

EXECUTIVE DIRECTOR, HAWAII COMMUNITY DEVELOPMENT AUTHORITY

"RECORD DRAWINGS"

FILE	POCKET	FOLDER	NO.

GENERAL NOTES

A. SEE ALSO:

1. OTHER CONTRACT DOCUMENTS
2. SPECIAL NOTES ON DRAWINGS

B. DISCREPANCIES – CONTRACTOR SHALL VERIFY ALL DIMENSIONS AND CONDITIONS AND SHALL REPORT ANY DISCREPANCIES IN WRITING TO THE OWNER BEFORE COMMENCING WORK OR ORDERING MATERIALS.

C. ALL MATERIALS AND WORKMANSHIP SHALL CONFORM TO THE REQUIREMENTS OF THE LOCAL BUILDING CODE IN ADDITION TO THE CODES CITED.

D. DETAILS SHOWN ON DRAWINGS SHALL BE TYPICAL FOR ALL SIMILAR CONDITIONS. MODIFY DETAILS FOR SPECIAL CONDITIONS AS DIRECTED BY THE ENGINEER.

CONSTRUCTION NOTES

A. NEITHER THE PROFESSIONAL ACTIVITIES OF SSFM ENGINEERS, INC. (SSFM), NOR THE PRESENCE OF SSFM OR SSFM'S EMPLOYEES AT A CONSTRUCTION SITE, SHALL RELIEVE THE GENERAL CONTRACTOR AND ANY OTHER ENTITY OF THEIR OBLIGATIONS, DUTIES, AND RESPONSIBILITIES INCLUDING, BUT NOT LIMITED TO, CONSTRUCTION MEANS, METHODS, SEQUENCES, TECHNIQUES, OR PROCEDURES NECESSARY FOR PERFORMING, SUPERINTENDING, OR COORDINATING ALL PORTIONS OF THE WORK OF CONSTRUCTION IN ACCORDANCE WITH THE CONTRACT DOCUMENTS AND ANY HEALTH OR SAFETY PRECAUTIONS REQUIRED BY ANY REGULATORY AGENCIES. SSFM AND SSFM'S PERSONNEL HAVE NO AUTHORITY TO EXERCISE ANY CONTROL OVER ANY CONSTRUCTION CONTRACTOR OR OTHER ENTITY OR THEIR EMPLOYEES IN CONNECTION WITH THEIR WORK OR ANY HEALTH OR SAFETY PRECAUTIONS.

B. THE CONTRACTOR SHALL NOTIFY THE ENGINEER AT LEAST 48 HOURS IN ADVANCE FOR REVIEW AND OBSERVATION OF REINFORCING AND CONCRETE POURS.

C. CONSTRUCTION LOADING SHALL NOT EXCEED THE DESIGN LIVE LOAD UNLESS SPECIAL SHORING IS PROVIDED. ALLOWABLE LOADS SHALL BE REDUCED IN AREAS WHERE THE STRUCTURE HAS NOT ATTAINED ITS FULL DESIGN STRENGTH.

D. FORM AND SHORE REMOVAL:

1. SEQUENCE SHALL ALWAYS BE FROM MIDSPAN TO SUPPORTS, AND FROM SLAB TO JOISTS TO GIRDERS.
2. MINIMUM TIME BEFORE REMOVAL OF FORMS:
   (A) WALLS: 5 DAYS (24 HOURS IF MOIST CURED FOR 7 DAYS OR SEALED WITH CURING COMPOUND)
   (B) SLABS: 14 DAYS

EARTHWORK NOTES

A. FILL MATERIAL SHALL BE "NON-EXPANSIVE" IN CHARACTER, AND OF AN ACCEPTABLE GRADATION. SAMPLES SHALL BE SUBMITTED OR SHOWN TO THE SOILS ENGINEER FOR APPROVAL BEFORE DELIVERY TO THE SITE.

B. COMPACTION:

1. BACKFILL AROUND FOOTINGS AND FOUNDATIONS SHALL BE COMPACTED IN LAYERS BY PNEUMATIC TAMPER INTO A DENSE MASS.
2. FILL SHALL BE PLACED AND COMPACTED ACCORDING TO GEOTECHNICAL ENGINEER'S RECOMMENDATIONS.

C. BACKFILL BEHIND WALLS:

1. BACKFILL MATERIAL SHALL CONSIST OF NON-EXPANSIVE GRANULAR SOIL ACCEPTABLE TO THE SOILS ENGINEER.
2. THE BACKFILL AGAINST WALLS SUPPORTED AT THE TOP AND BOTTOM BY SLABS SHALL HAVE CURED FOR A MINIMUM OF 7 DAYS UNLESS THE WALLS ARE ADEQUATELY BRACED.

D. ALL EXCAVATIONS SHALL BE PROTECTED AND GUARDED BY THE CONTRACTOR AGAINST DANGER TO LIVE, LIMB AND PROPERTY.

E. SHORING, SHEETING, CRIBBING AND LAGGING, AS REQUIRED TO PRESERVE THE EXCAVATIONS, EARTH BANKS AND ADJACENT STRUCTURES AND PROPERTY FREE FROM DAMAGE RESULTING FROM THE WORK SHALL BE PROVIDED AND INSTALLED BY THE CONTRACTOR.

CONCRETE NOTES

A. ALL CONCRETE SHALL DEVELOP THE FOLLOWING MINIMUM ULTIMATE COMPRESSIVE STRENGTHS, WITH CORRESPONDING MAXIMUM SIZE OF AGGREGATES AND SLUMPS AS FOLLOWS (UNLESS SHOWN ELSEWHERE IN SCHEDULES):

ELEMENT	28 DAY STRENGTH (PSI)	MAXIMUM SIZE AGGREGATE	SLUMP
1. SLABS AND WALLS	3000	3/4"	3 1/2"±1/2"

B. ADMIXTURES: USE OF ADMIXTURE AT CONTRACTOR'S OPTION, BUT SUBJECT TO ENGINEER'S APPROVAL.

C. THE USE OF ANY CALCIUM CHLORIDE IN ANY CONCRETE IS PROHIBITED.

REINFORCING STEEL NOTES

A. STRENGTHS – UNLESS OTHERWISE NOTED ON PLANS, ALL REINFORCING BARS SHALL BE ASTM A615, GRADE 60.

B. SPLICES:

1. LENGTHS SHALL BE 48 BAR DIAMETERS OR 2'–0" WHICHEVER IS GREATER, UNLESS OTHERWISE SHOWN.
2. LOCATIONS UNLESS SHOWN OTHERWISE:
   (A) WALLS – HORIZONTAL REINFORCING ALTERNATELY STAGGERED 3'–0" APART.
   (B) SLABS:
      (1) TOP BARS AT MIDSPAN
      (2) BOTTOM BARS AT SUPPORTS

C. MINIMUM CONCRETE CLEAR COVER:

1. CONCRETE POURED AGAINST EARTH . . . . . 3"
2. CONCRETE POURED AGAINST FORMS AND LATER EXPOSED TO EARTH . . . . . 2"
3. WALLS AND SLABS EXPOSED TO WEATHER OR GROUND:
   (A) #5 BAR OR SMALLER . . . . . 1 1/2"
   (B) #6 BAR OR LARGER . . . . . 2"
4. SLABS AND WALLS (PROTECTED). . . . . 3/4"

D. BAR BENDS, HOOKS, AND OFFSETS SHALL BE IN ACCORDANCE WITH THE ACI RECOMMENDATIONS.

E. SPECIAL SPACER CHAIRS: PLASTIC SPACER "CHAIRS" SHALL BE USED TO MAINTAIN REQUIRED MINIMUM CONCRETE CLEAR COVER FOR ALL WALL REINFORCING AT FACES EXPOSED TO WEATHER.

SPECIAL REQUIREMENTS FOR COLUMN CONCRETE POURS

A. GENERAL: WALLS SHALL BE CONTINUOUSLY POURED FULL HEIGHT, WITHOUT CREATING HORIZONTAL COLD JOINTS.

B. WALLS

1. ACCEPTABLE METHODS OF PLACING CONCRETE FOR WALLS:
   (A) FOR WALLS WITH A MAXIMUM POUR HEIGHT OF 8 FEET, CONCRETE CAN BE PLACED BY CHUTES OR BUCKETS AT TOP OF THE WALLS.
   (B) FOR WALLS WITH A MAXIMUM POUR HEIGHT OF MORE THAN 8 FEET, CONCRETE SHALL BE PLACED BY MEANS OF "ELEPHANT TRUNKS."

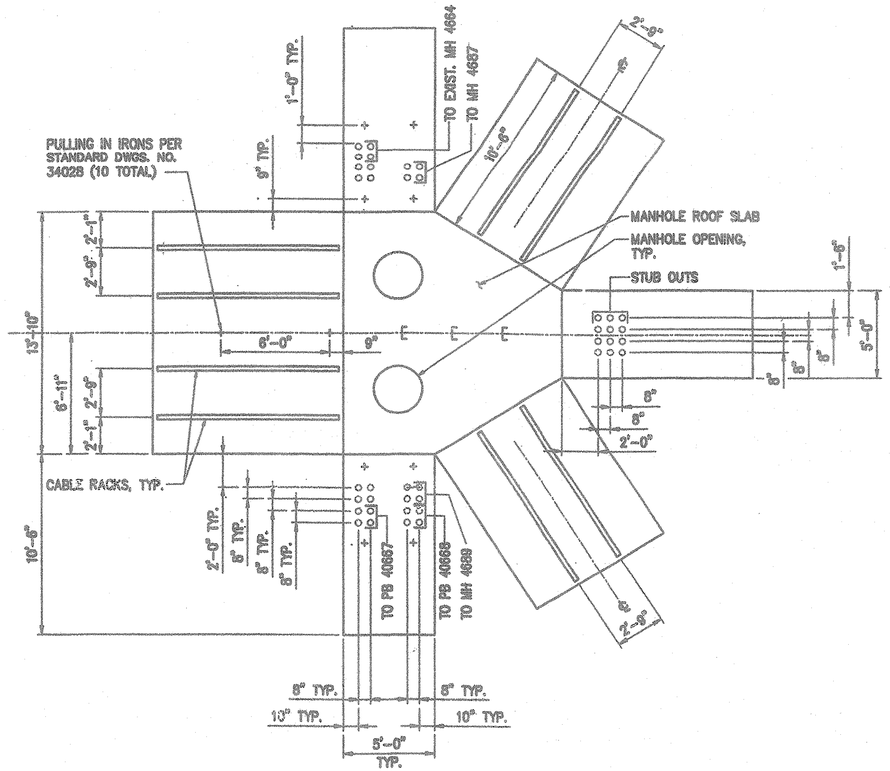

MANHOLE BUTTERFLY DETAIL
SCALE: 1/4" = 1'-0"

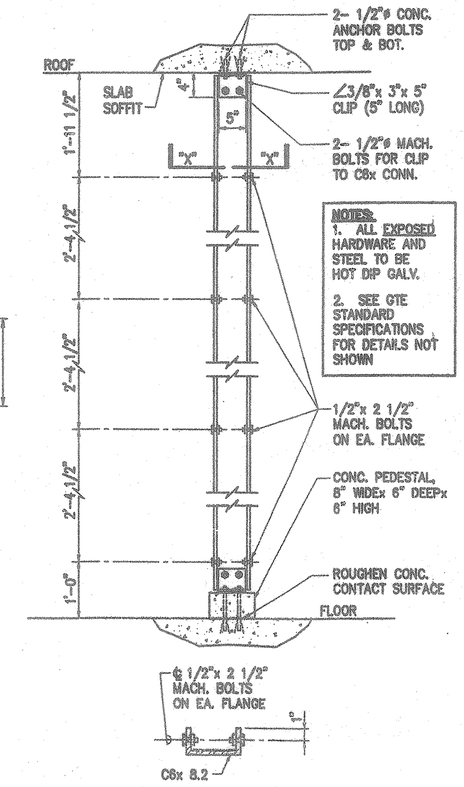

SECTION "X" – "X"

1 / S-16 CABLE RACK FRAME
NOT TO SCALE

REVISION NO.	DATE	DESCRIPTION	APPROVED BY:

LEE T. TANOUYE
LICENSED PROFESSIONAL ENGINEER
NO. 4707-S
HAWAII USA

SSFM ENGINEERS, INC.
501 SUMMER STREET, SUITE 502
HONOLULU, HAWAII 96817

KAKAAKO ID 9
ILALO STREET IMPROVEMENTS
KAKAAKO COMMUNITY IMPROVEMENT DISTRICT
MH 4668

V-3 MANHOLE
NOTES AND DETAILS

DESIGNED BY:	CHECKED BY:	PROJECT NO.	DRAWING NO.
CM	LT	9911600	S-16
DRAWN BY:	APPROVED BY:	DATE	SHEET
CM	RSS	NOV. 99	75 OF 140 SHTS
SCALE:			

EXECUTIVE DIRECTOR, HAWAII COMMUNITY DEVELOPMENT AUTHORITY

THIS WORK WAS PREPARED BY ME OR UNDER MY SUPERVISION

"RECORD DRAWINGS"

I:\1999\9911600P\GDRAWNGS\PLANS\S-1.DWG 11/29/99 14:02 CM

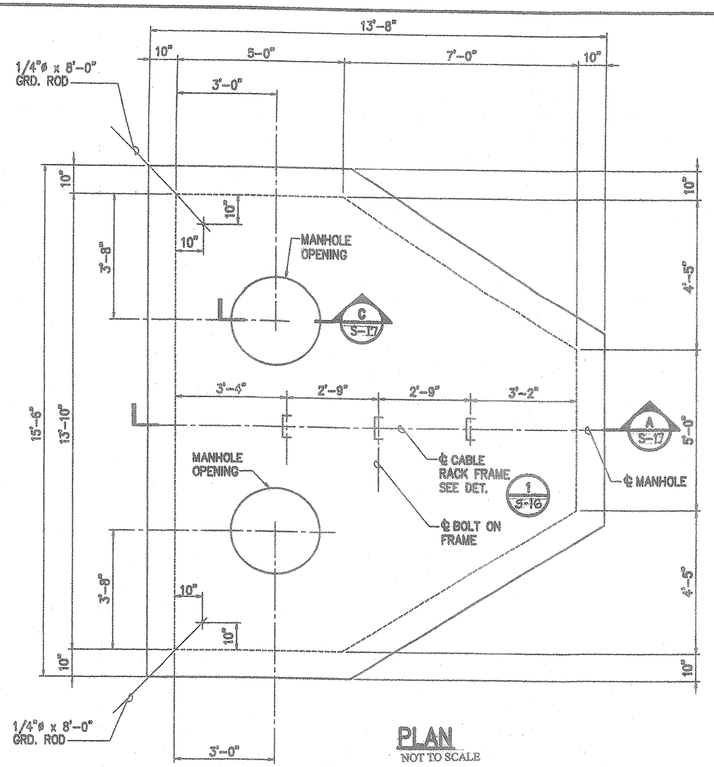

PLAN
NOT TO SCALE

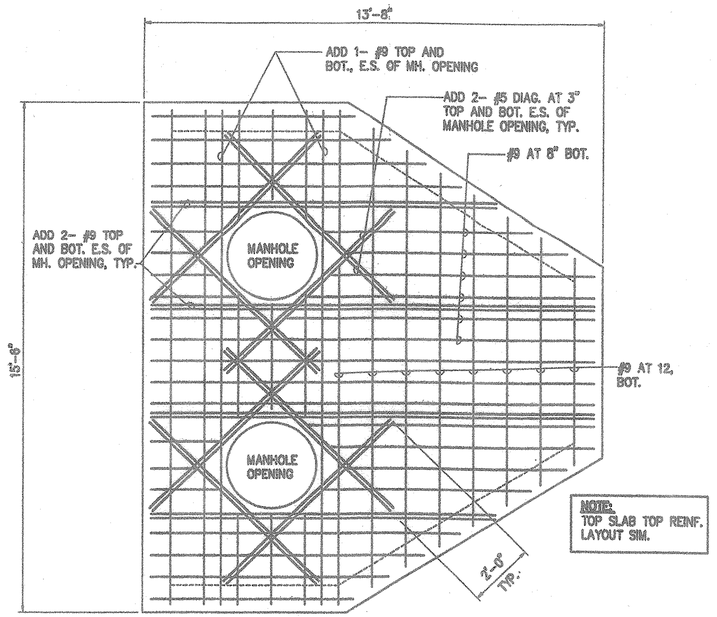

TOP SLAB BOTTOM REINF. PLAN
NOT TO SCALE

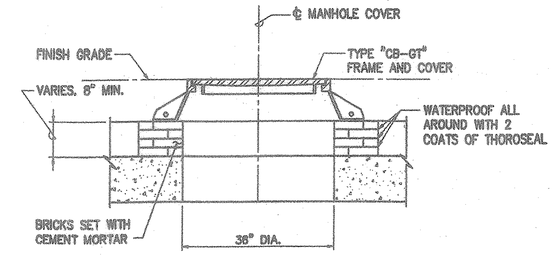

C S-17 SECTION
NOT TO SCALE

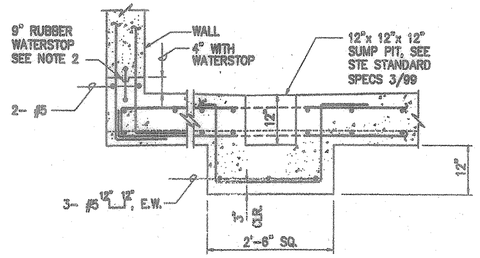

MANHOLE SUMP

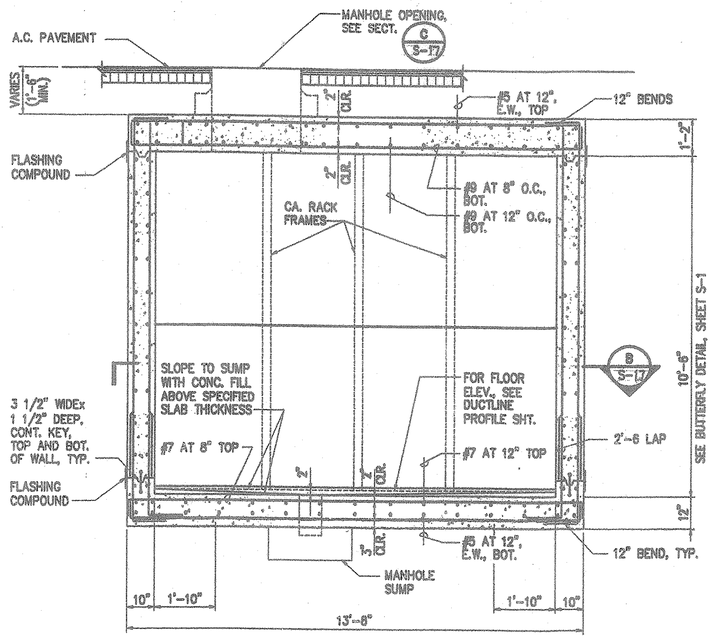

A S-17 SECTION
NOT TO SCALE

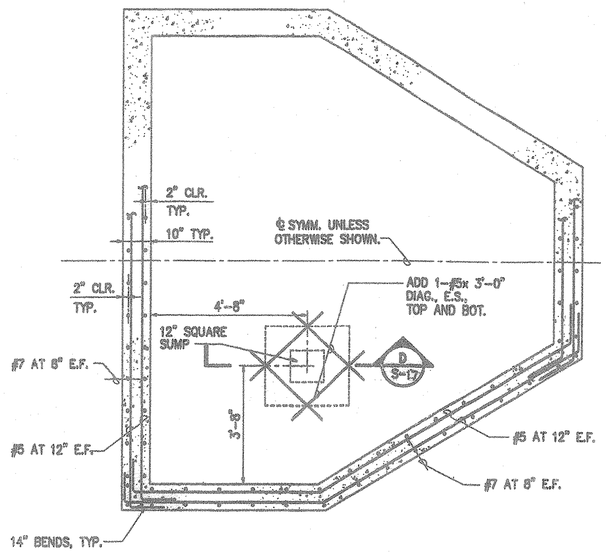

B S-17 SECTION
NOT TO SCALE

D S-17 SECTION
NOT TO SCALE

NOTES:

1. DESIGN DATA:
   fs = 20,000 PSI
   fc' = 3,000 PSI
   fc = 1,200 PSI
   w = EQUIV. FLUID PRESS (MIN. 60 PCF)
2. ALL CONSTRUCTION JOINTS LOCATED BELOW THE WATER TABLE SHALL BE WATERPROOFED WITH A CONTINUOUS STRIP OF RUBBER WATERSTOP.
3. FOR DUCT WINDOW ELEVATIONS, SEE PLAN AND PROFILE SHEETS. FOR LOCATION AND SIZE OF DUCT WINDOW, SEE ELEVATION OF MANHOLE WALLS AND STANDARD DUCT FORMATIONS.
4. PLACED POLYCORD FISHWIRE OR EQUAL IN EACH DUCT THROUGHOUT ITS ENTIRE LENGTH WITH PROTRUSIONS OF 2 FEET IN MANHOLES AND MANHOLES AT EACH END AND 1 FOOT IN PULLBOXES.
5. SUMP SHALL BE 12" DEEP VITRIFIED CLAY PIPE EMBEDDED IN CONC. SLAB (THE CONC. FLOOR SHALL BE CONTINUOUS BELOW THE SUMP WITHOUT ANY CONSTRUCTION JOINTS.)

EXECUTIVE DIRECTOR, HAWAII COMMUNITY DEVELOPMENT AUTHORITY

REVISION NO.	DATE	DESCRIPTION	APPROVED BY

LEO T. TAKUMI
LICENSED PROFESSIONAL ENGINEER
NO. 4707-S
HAWAII, USA

THIS WORK WAS PREPARED BY ME OR UNDER MY SUPERVISION

SSFM ENGINEERS, INC.
501 SUMMER STREET, SUITE 502
HONOLULU, HAWAII 96817

KAKAAKO ID 9
ILALO STREET IMPROVEMENTS
KAKAAKO COMMUNITY IMPROVEMENT DISTRICT
MH 4688

V-3 MANHOLE
PLANS, SECTIONS AND DETAILS

DESIGNED BY	CHECKED BY	PROJECT NO.	DRAWING NO.
CM	LT	9911600	S-17
DRAWN BY	APPROVED BY		
CM	RSS	DATE NOV. 99	SHEET 16 OF 140 SHTS
SCALE:			

I:\1999\9911600P\GDRAWNGS\PLANS\S-2.DWG 11/29/99 13:57 CM

"RECORD DRAWINGS"

ILALO STREET ELECTRICAL DEMOLITION PLAN–2
SEE SHEET E–6

ILALO STREET ELECTRICAL UTILITY PLAN AND PROFILE–3
SEE SHEET E–10

ILALO STREET LIGHTING/ TRAFFIC SIGNAL PLAN–3
SEE SHEET E–15

ILALO STREET ELECTRICAL DEMOLITION PLAN–3
SEE SHEET E–7

ILALO STREET ELECTRICAL UTILITY PLAN AND PROFILE–5
SEE SHEET E–12

ILALO STREET LIGHTING/ TRAFFIC SIGNAL PLAN–5
SEE SHEET E–17

NEW STREET LIGHT METERING CABINET (M–137)
SEE E–15

ILALO STREET

COOKE STREET

CORAL STREET

KEAMA STREET

FORREST AVENUE

FUTURE PUNCHBOWL STREET EXTENSION

ALA MOANA BLVD

AKAULA STREET

ONE STREET

ABHU STREET

WARD AVENUE EXTENSION

ILALO STREET ELECTRICAL DEMOLITION PLAN–1
SEE SHEET E–5

ILALO STREET ELECTRICAL UTILITY PLAN AND PROFILE–1
SEE SHEET E–8

ILALO STREET LIGHTING/ TRAFFIC SIGNAL PLAN–1
SEE SHEET E–13

ILALO STREET ELECTRICAL DEMOLITION PLAN–1
SEE SHEET E–5

ILALO STREET ELECTRICAL UTILITY PLAN AND PROFILE–2
SEE SHEET E–9

ILALO STREET LIGHTING/ TRAFFIC SIGNAL PLAN– 2
SEE SHEET E–14

ILALO STREET ELECTRICAL DEMOLITION PLAN–3
SEE SHEET E–7

ILALO STREET ELECTRICAL UTILITY PLAN AND PROFILE–4
SEE SHEET E–11

ILALO STREET LIGHTING/ TRAFFIC SIGNAL PLAN–4
SEE SHEET E–16

TRUE NORTH

1 / E-1 GENERAL ELECTRICAL SITE PLAN

SCALE: 1" = 100'

GRAPHIC SCALE

100' 50' 0' 100' 200' 300'

1" = 100'

APPROVED:

CHIEF, MECHANICAL/ELECTRICAL — DATE
DESIGN AND ENGINEERING DIVISION
DEPARTMENT OF DESIGN AND CONSTRUCTION
CITY AND COUNTY OF HONOLULU
(FOR STREET LIGHT WORK ONLY)

CHIEF, TRAFFIC REVIEW BRANCH — DATE
DEPARTMENT OF PLANNING AND PERMITTING
CITY AND COUNTY OF HONOLULU

REVISION	DATE	DESCRIPTION	MADE BY	APPROVED

Planning – Engineering – Environmental Services – Photogrammetry – Surveying – Construction Management
R. M. TOWILL CORPORATION
808 842 1133 420 Waiakamilo Road Suite 411 Honolulu Hawaii 96817–6041

VINCENT K. MIYAGAWA LICENSED PROFESSIONAL ENGINEER No. 4534–E HAWAII, U.S.A.

THIS WORK WAS PREPARED BY ME OR UNDER MY SUPERVISION.
ECS, INC.
By
Its PROJECT ENGINEER
Date JULY 21, 2000

HAWAII COMMUNITY DEVELOPMENT AUTHORITY
STATE OF HAWAII
HONOLULU, HAWAII

KAKA'AKO COMMUNITY DEVELOPMENT DISTRICT
IMPROVEMENT DISTRICT 9
ILALO STREET IMPROVEMENTS

GENERAL ELECTRICAL SITE PLAN

ENGINEER: MA
DRAFTSMAN: RD
CHECKED BY: VM
DATE: JULY 21, 2000

EXECUTIVE DIRECTOR, HAWAII COMMUNITY DEVELOPMENT AUTHORITY

FILE	POCKET	FOLDER	NO.

FILENAME: 60-32S1

ELECTRICAL SYMBOLS LIST

EXISTING	NEW	DESCRIPTION
		DECORATIVE STREET LIGHT STANDARD, 250W HPS, SEE E-22
		DECORATIVE STREET LIGHT STANDARD, 150W HPS, SEE E-22
		EXISTING STREET LIGHT
		AREA/PARKING LOT LIGHT
		MANHOLE, TYPE AS INDICATED
		HECO HANDHOLE, TYPE AS INDICATED
		HTCO HANDHOLE, TYPE AS INDICATED
		CATV 2' x 4' PULLBOX
		TYPE "A" TRAFFIC SIGNAL PULLBOX, SEE E-19
		TYPE "C" TRAFFIC SIGNAL PULLBOX, SEE E-19
		STREET LIGHT PULLBOX, TYPE "A" SEE E-19
		STREET LIGHT PULLBOX, TYPE SLD-4, SEE E-21
		CITY COMMUNICATIONS PULLBOX, TYPE SLD-4, SEE E-21
T	T	HECO TRANSFORMER PAD
	S	HECO PST-9 SWITCH PAD
	P	HECO PMH-3 SWITCH PAD
		EXISTING HANDHOLE OR PULLBOX
	M	METERING EQUIPMENT CABINET
JP10	JP10	JOINT UTILITY POLE, POLE NO.10 INDICATED
		ELECTRICAL SERVICE EQUIPMENT
	J	JUNCTION BOX, SIZE AND TYPE AS NOTED
		POLE MOUNTED FLOODLIGHTS

EXISTING	NEW	DESCRIPTION
	EMH	ELECTRICAL MANHOLE
	EPB	ELECTRICAL PULLBOX
	GND	GROUND
	TMH	TELEPHONE MANHOLE
	TPB	TELEPHONE PULLBOX
	TSPB	TRAFFIC SIGNAL PULLBOX
	SLPB	STREET LIGHT PULLBOX
	SCMH	SIGNAL CORPS MANHOLE
	CATV	CABLE TELEVISION
	HECO	HAWAIIAN ELECTRIC COMPANY
	HTCO	HAWAIIAN TELEPHONE COMPANY
	WP	WEATHERPROOF
——s——	——— – ———	ELECTRIC/SIGNAL DUCTLINE
—e/OH/_—	——OH/_——	OVERHEAD LINES (P/T/FO) P=POWER T=TELEPHONE FO=FIBER OPTIC TELECOMMUNICATIONS CABLE
——e/TS——	——TS——	TRAFFIC SIGNAL DUCTLINE
——e/SL——	——SL——	STREET LIGHT DUCTLINE AND WIRING
——e/SC——	——SC——	SIGNAL CORPS DUCTLINE AND CABLING
——e/FO——	——FO——	CITY FIBER OPTIC TELECOMMUNICTIONS DUCTLINE
	— — — —	EXPOSED CONDUIT
	E——	CONDUIT STUB, CAP AND MARK, SEE E-27
	×	DENOTES DEMOLITION/REMOVAL
	1 M98 A1 120V	CITY AND COUNTY STREET LIGHT TAG INFORMATION, SEE E-21
	A 1	DUCT INDICATOR, 1 DENOTES DUCT TYPE; A DENOTES DUCT SECTION TYPE
	1	NOTE INDICATOR

DRAWING REVIEW

Reviewed for HECO's Facilities Only

Date 8/9/00 By [signature]

Engineering Department
Hawaiian Electric Company, Inc.

HECO's review of these drawings shall in no way relieve the Customer, its Consultant, its Contractor or anyone acting on the Customer's behalf from the responsibility for engineering, design, materials and any other liability associated with this project.

APPROVED:

HAWAIIAN ELECTRIC COMPANY, INC — DATE

[signature] 8/7/00
GTE HAWAIIAN TEL — DATE

[signature] 8-4-00
OCEANIC CABLEVISION — DATE

[signature] 8/11/00
CHIEF, MECHANICAL/ELECTRICAL
DESIGN AND ENGINEERING DIVISION
CITY AND COUNTY OF HONOLULU
(FOR STREET LIGHT WORK AND CITY COMMUNICATIONS) — DATE

[signature] 8/2/00
CHIEF, TRAFFIC SIGNAL AND
TECHNOLOGY DIVISION
DEPARTMENT OF TRANSPORTATION SERVICES
CITY AND COUNTY OF HONOLULU
(FOR TRAFFIC SIGNAL WORK ONLY) — DATE

[signature] 8/8/00
CHIEF, TRAFFIC REVIEW BRANCH — DATE
DEPARTMENT OF PLANNING AND PERMITTING
CITY AND COUNTY OF HONOLULU

GENERAL NOTES:

1. COORDINATE ALL DUCT WORK WITH RESPECTIVE UTILITY COMPANY.
2. SEE UTILITY COMPANY STANDARD DRAWINGS FOR ALL DETAILS. COORDINATE DUCT ENTRIES INTO HANDHOLES WITH UTILITY COMPANY.
3. THE CONTRACTOR SHALL BRACE ALL POLES OR LIGHT STANDARDS NEAR THE NEW DUCTLINE, MANHOLE, OR HANDHOLE DURING ITS CONSTRUCTION.
4. WHENEVER CONNECTIONS TO EXISTING UTILITIES ARE SHOWN ON THE PLANS, THE CONTRACTOR SHALL EXPOSE THE EXISTING LINES PRIOR TO EXCAVATION OF THE MAIN TRENCHES TO VERIFY LOCATIONS AND DEPTHS.
5. ALL OVERHEAD RELOCATIONS AND REMOVALS, INCLUDING POLES AND ANCHORS, SHALL BE PERFORMED BY THE RESPECTIVE UTILITY COMPANIES UNLESS NOTED.
6. COORDINATE THE REMOVAL OF STREET LIGHTS MOUNTED ON JOINT UTILITY POLES WITH HECO.
7. MANHOLES, HANDHOLES AND PULLBOXES SHALL BE PROVIDED IN ACCORDANCE WITH THE FOLLOWING STANDARDS.
   a) 2' X 4' HECO SERVICE BOX – PER HECO DRAWING #30-2005
   b) 3' X 5' HECO HANDHOLE – PER HECO DRAWING #18841
   c) 4' X 6' HECO HANDHOLE – PER HECO DRAWING #18842
   d) 6' X 14' HECO MANHOLE – PER HECO DRAWING #71467
   e) 2' X 4' HTCO HANDHOLE – TYPE 4351B PRECAST CONRETE PULLBOX WITH 2-PIECE STEEL "SLIP-NOT" GRIP OR POLYMER "NON-SKID" COVERS AND GROUND ROD PER HTCO STANDARD DRAWING NO. 34056. A MINIMUM OF 3 PRECAST CONRETE PULLBOX SECTIONS SHALL BE REQUIRED AT EACH PULLBOX.
   f) 3' X 5' HTCO HANDHOLE – PRECAST PER #GTS-8395
   g) 6' X 15' X 9' HTCO MANHOLE – PRECAST IN ACCORDANCE WITH GTE STANDARD SPECIFICATIONS. SEE S-14 AND S-15.
   h) V3 X 10'-6" (MODIFIED) HTCO MANHOLE – CAST-IN-PLACE IN ACCORDANCE WITH GTE STANDARD SPECIFICATIONS. SEE S-16 AND S-17.
   i) 2' X 4' CATV HANDHOLE – PRECAST WITH "CATV" STENCIL ON CONCRETE COVER, WITH SPECIAL CONCRETE FINISH. SEE SPECIFICATIONS SECTION 03350. SIMILAR TO HTCO #4351B
   j) 5' X 8' X 6' SIGNAL CORPS MANHOLE – REINFORCED CONCRETE WITH TRAFFIC RATED FRAME AND COVER, SIMILAR TO HTCO #34062 WITH "U.S. ARMY SIGNAL CORPS" INSCRIBED ON COVER
8. THE HECO DESIGN DRAWINGS LISTED ABOVE HAVE BEEN PREVIOUSLY APPROVED FOR GENERAL USE IN HECO'S SYSTEM. HECO MANHOLES AND HANDHOLES SHALL BE DESIGNED AND CONSTRUCTED IN ACCORDANCE WITH HECO STANDARD CONSTRUCTION SPECIFICATION CS9401-2 AND SHALL BE SUITABLE FOR USE WITHIN THE PROJECT AREA. PROJECT SPECIFIC DESIGN AND SHOP DRAWINGS SHALL INCLUDE DUCT ENTRANCE DETAILS AND CALCULATIONS FOR STRENGTH AND BUOYANCY.

REVISION	DATE	DESCRIPTION	MADE BY	APPROVED

Planning – Engineering – Environmental Services – Photogrammetry – Surveying – Construction Management
R. M. TOWILL CORPORATION
808 842 1133 420 Waiakamilo Road Suite 411 Honolulu Hawaii 96817-4941

VINCENT K. MIYAGAWA
LICENSED PROFESSIONAL ENGINEER
No. 4534-E
HAWAII, U.S.A.

THIS WORK WAS PREPARED BY ME OR UNDER MY SUPERVISION.
ECS, INC.
By [signature]
Its PROJECT ENGINEER
Date JULY 21, 2000

HAWAII COMMUNITY DEVELOPMENT AUTHORITY
STATE OF HAWAII
HONOLULU, HAWAII

KAKA'AKO COMMUNITY DEVELOPMENT DISTRICT
IMPROVEMENT DISTRICT 9
ILALO STREET IMPROVEMENTS

ELECTRICAL SYMBOLS LIST
GENERAL NOTES

ENGINEER: MA — CHECKED BY: VM
DRAFTSMAN: CM — DATE: JULY 21, 2000

[signature]
EXECUTIVE DIRECTOR, HAWAII COMMUNITY DEVELOPMENT AUTHORITY

FILENAME: 60-32G1

FILE	POCKET	FOLDER	NO.

HAWAIIAN ELECTRIC COMPANY NOTES

1. THE LOCATION OF HECO'S OVERHEAD AND UNDERGROUND FACILITIES SHOWN ON THE PLANS ARE FROM EXISTING RECORDS WITH VARYING DEGREES OF ACCURACY AND ARE NOT GUARANTEED AS SHOWN. THE CONTRACTOR SHALL EXERCISE EXTREME CAUTION WHENEVER CONSTRUCTION CROSSES OR IS IN CLOSE PROXIMITY OF UNDERGROUND LINES AND SHALL MAINTAIN A MINIMUM 13'-0" CLEARANCE WHEN OPERATING EQUIPMENT WITHIN OR UNDER ANY OVERHEAD LINES.
2. THE CONTRACTOR SHALL COMPLY WITH THE STATE OF HAWAII'S OCCUPATIONAL SAFETY AND HEALTH LAW (DOSH).
3. THE CONTRACTOR SHALL OBTAIN AN EXCAVATION PERMIT FROM HECO'S CUSTOMER INSTALLATION DEPARTMENT LOCATED AT 820 WARD AVENUE, 4TH FLOOR, TWO WEEKS PRIOR TO STARTING CONSTRUCTION.
4. THE CONTRACTOR TO STAKEOUT ALL FACILITIES FOR VERIFICATION BY THE UTILITY INVOLVED AND/OR AFFECTED BEFORE PROCEEDING.
5. ALL MANHOLES, PULLBOXES AND DUCTLINES TO BE INSTALLED IN CONCRETE, SHALL BE INSPECTED AND APPROVED BY THE UTILITY COMPANY BEFORE PLACING CONCRETE.
6. ALL COMPLETED DUCTLINES SHALL BE MANDREL TESTED BY THE CONTRACTOR IN THE PRESENCE OF THE UTILITY COMPANY'S INSPECTOR USING THE UTILITY COMPANY'S STANDARD PRACTICE.
7. THE CONTRACTOR SHALL INSTALL A 1/8" POLYOLEFIN PULL LINE IN ALL COMPLETED HECO AND CATV DUCTLINES AFTER MANDREL TESTING IS COMPLETE.
8. THE CONTRACTOR SHALL BE RESPONSIBLE FOR ALL PROPOSED WORK WITHIN PRIVATE PROPERTY TO ENABLE THE CONVERSION FROM OVERHEAD TO UNDERGROUND. THE CONTRACTOR SHALL COORDINATE ALL WORK WITH THE UTILITY COMPANIES.
9. THE CONTRACTOR SHALL GIVE HECO FORTY (40) WORKING DAYS NOTICE TO PROCEED WITH IT'S PORTION OF THE WORK.
10. BARRICADING OF HECO'S FACILITIES, IF REQUIRED, SHALL BE DONE BY CONTRACTOR. BREAKING INTO EXISTING HECO FACILITIES SHALL BE DONE BY HECO.
11. HECO SHALL REMOVE ALL EXISTING HECO FACILITIES EXCEPT AS NOTED ON THE PLANS.
12. HTCO SHALL BE THE JP REMOVAL COMPANY.
13. THE FOLLOWING TERMS WILL BE USED INTERCHANGEABLY THROUGHOUT THIS PROJECT:
    A. HTCO OR "T" FOR HAWAIIAN TELEPHONE COMPANY.
    B. HECO OR "E" FOR HAWAIIAN ELECTRIC COMPANY.
    C. OCEANIC CABLE OR "V" FOR OCEANIC CABLEVISION.
14. THE CONTRACTOR SHALL FURNISH HIS CONSTRUCTION SCHEDULE FORTY-FIVE (45) WORKING DAYS PRIOR TO STARTING ANY HECO WORK.
15. FOR VERIFYING THE LOCATION OF UNDERGROUND DUCTLINES AND FOR ASSISTANCE IN PROVIDING PROPER SUPPORT AND PROTECTION OF UNDERGROUND DUCTLINES, THE CONTRACTOR SHALL CONTACT THE HECO UNDERGROUND DIVISION AT 543-7871 OR 543-7345, A MINIMUM OF 72 HOURS IN ADVANCE. LOCATION AND DEPTH OF ALL HANDHOLES AND MANHOLES SHALL BE VERIFIED AND APPROVED IN THE FIELD BY HECO PRIOR TO EXCAVATION, CONSTRUCTION, OR INSTALLATION.
16. WHEN TRENCH EXCAVATION IS ADJACENT TO OR UNDER EXISTING STRUCTURES OR FACILITIES, THE CONTRACTOR IS RESPONSIBLE FOR PROPERLY SHEETING AND BRACING THE EXCAVATION AND STABILIZING THE EXISTING GROUND TO RENDER IT SAFE AND SECURE FROM POSSIBLE SLIDES, CAVE-INS AND SETTLEMENT, AND FOR PROPERLY SUPPORTING EXISTING STRUCTURES AND FACILITIES WITH BEAMS, STRUTS OR UNDERPINNING TO FULLY PROTECT IT FROM DAMAGE.
17. ANY WORK REQUIRED TO RELOCATE HECO FACILITIES SHALL BE DONE BY HECO AND THE CONTRACTOR SHALL BE RESPONSIBLE FOR ALL COORDINATION, AND FOR COSTS IF APPLICABLE.
18. SHOULD IT BECOME NECESSARY TO TEMPORARILY RELOCATE ANY HECO FACILITIES TO ENABLE THE CONTRACTOR TO PERFORM HIS WORK IN A SAFE AND EXPEDITIOUS MANNER IN FULFILLING HIS CONTRACT OBLIGATIONS, THESE TEMPORARY RELOCATIONS WILL BE DONE BY HECO, OR BY THE CONTRACTOR UNDER HECO'S SUPERVISION, WITH ALL COSTS BEING BORNE BY THE CONTRACTOR.
19. ANY DAMAGE TO HECO'S FACILITIES SHALL BE REPORTED IMMEDIATELY TO HECO'S TROUBLE DISPATCHER AT 543-7874.
20. ALL HECO OVERHEAD AND UNDERGROUND FACILITIES SHOWN ON THESE PLANS OR WHOSE APPROXIMATE LOCATIONS WITHIN THE PROJECT BOUNDARIES HAVE BEEN MADE KNOWN BY REASONABLE MEANS. ALL HECO FACILITIES SHALL BE PROTECTED AT ALL TIMES BY THE CONTRACTOR DURING CONSTRUCTION. COSTS FOR DAMAGES TO HECO FACILITIES SHALL BE BORNE BY THE CONTRACTOR. THIS REPAIR WORK SHALL BE DONE BY HECO, OR BY THE CONTRACTOR UNDER HECO'S SUPERVISION.
21. CAUTION!!! ELECTRICAL HAZARD!!!!
    EXISTING ELECTRICAL FACILITIES, OVERHEAD LINES AND UNDERGROUND ENCASED BURIED DUCT LINES ARE ENERGIZED AND WILL REMAIN ENERGIZED DURING CONSTRUCTION. CABLES IN SERVICE BOXES, TRANSFORMER VAULTS AND HANDHOLES ARE ALSO ENERGIZED. ONLY HAWAIIAN ELECTRIC COMPANY PERSONNEL ARE TO HANDLE THESE ENERGIZED CABLES AND ERECT TEMPORARY GUARDS TO PROTECT CABLES FROM DAMAGE. CONTRACTOR SHALL WORK CAUTIOUSLY TO AVOID ACCIDENTS AND DAMAGE TO EXISTING FACILITIES. CONTRACTOR SHALL COORDINATE HIS WORK WITH HECO U.G. DIVISION (PHONE: 543-7871 OR 543-7345) AND INSPECTION DIVISION (PHONE: 543-4356).
22. THE CONTRACTOR SHALL FURNISH AND INSTALL ALL MATERIALS TO COMPLETE CONSTRUCTION OF THE UNDERGROUND DUCTLINE SYSTEM, INCLUDING RISER CONDUITS. ALL ELECTRIC DUCTS SHALL BE ENCASED IN CONCRETE JACKET UNLESS OTHERWISE SPECIFIED. ALL DUCTS AND CONDUITS SHALL BE INSPECTED AND APPROVED BY HECO PRIOR TO PLACING CONCRETE. THE CONTRACTOR SHALL NOTIFY HECO'S INSPECTION DIVISION (PHONE 548-4356) AT LEAST 24 HOURS PRIOR TO PLACING CONCRETE.
23. THE CONTRACTOR IS TO STAKE OUT ALL TEMPORARY & PERMANENT NEW POLE LOCATIONS SO AS NOT TO CONFLICT WITH ANY EXISTING OR PROPOSED UTILITY FOR HECO APPROVAL. THE CONTRACTOR SHALL BE RESPONSIBLE FOR COST INCURRED BY CONFLICTING UTILITIES.
24. THE CONTRACTOR SHALL INSTALL SCHEDULE 40 PVC CONDUIT FOR ALL HECO DUCTLINE, NO SPLIT DUCTS WILL BE ALLOWED. NOTCHING OF HECO BOXES WILL BE ALLOWED.
25. HECO TO RECEIVE 75 WORKING DAYS NOTICE FOR ANY RELOCATION WORK.
26. WHEN EXCAVATING NEAR UTILITY POLES, THE CONTRACTOR SHALL PROTECT, SUPPORT, SECURE AND TAKE ALL OTHER PRECAUTIONS TO PREVENT DAMAGE TO OR LEANING OF THESE POLES. CONTRACTOR IS RESPONSIBLE FOR ALL COSTS ASSOCIATED TO REPAIR OR STRAIGHTEN POLE.
27. FOR CONSTRUCTION OF UNDERGROUND FACILITIES REFER TO HECO SPECIFICATION CS7003 AND CS7001.
28. ALL DUCT LINE INSTALLATION SHALL BE CONCRETE ENCASED, SCHEDULE 40 PVC.
29. THE UNDERGROUND PIPES, CABLE OR DUCTLINES KNOWN TO EXIST BY THE ENGINEER FROM HIS SEARCH OF RECORDS ARE INDICATED ON THE PLANS. THE CONTRACTOR SHALL VERIFY THE LOCATIONS AND DEPTHS OF THE FACILITIES AND EXERCISE PROPER CARE IN EXCAVATING THE AREA. WHEREVER CONNECTIONS OF NEW UTILITIES TO EXISTING UTILITIES ARE SHOWN ON THE PLANS, THE CONTRACTOR SHALL EXPOSE THE EXISTING LINES AT THE PROPOSED CONNECTIONS TO VERIFY THEIR LOCATIONS AND DEPTHS PRIOR TO EXCAVATION FOR THE NEW LINES.
30. LOCATIONS OF ALL EXISTING HANDHOLES AND SERVICE BOXES ARE APPROXIMATE AND EXACT LOCATION SHALL BE DETERMINED IN THE FIELD.
31. THE CONTRACTOR SHALL PROVIDE TWO SETS OF AS-BUILT REPRODUCIBLE TRACINGS SHOWING THE OFFSETS, STATIONING AND VERTICAL ELEVATION OF THE DUCT LINE(S) CONSTRUCTED. ONE SET IS FOR THE STATE DEPARTMENT OF TRANSPORTATION, HIGHWAYS DIVISION AND THE OTHER IS FOR THE HAWAIIAN ELECTRIC COMPANY.
32. THE CONTRACTOR SHALL USE PROPER CARE IN EXCAVATING THE AREA. HE SHALL BE RESPONSIBLE FOR ANY DAMAGE TO SURFACE OR UNDERGROUND FACILITIES WHETHER SHOWN OR NOT SHOWN ON THE PLANS.
33. ALL MANHOLES SHALL BE CAST IN PLACE UNLESS APPROVED BY HECO.
34. HECO REFERENCE SPECIFICATIONS:

SPEC. NO.	DESCRIPTION
CS7001	CONSTRUCTION OF UNDERGROUND FACILITIES
CS7003	CONSTRUCTION OF ELECTRICAL FACILITIES
CS7202	GENERAL CONDITIONS FOR CONSTRUCTION OF PROJECTS
CS9301	CONCRETE WORK

OCEANIC CABLE (CATV) NOTES:

1. THE CONTRACTOR SHALL TAKE NECESSARY PRECAUTION NOT TO DAMAGE EXISTING CABLES OR DUCTS. ANY WORK INVOLVING EXISTING CABLES OR DUCTS SHALL BE DONE IN THE PRESENCE OF THE OCEANIC CABLE COMPANY INSPECTOR OR HIS REPRESENTATIVE.
2. THE CONTRACTOR SHALL NOTIFY THE OCEANIC CABLE COMPANY INSPECTOR 48 HOURS PRIOR TO THE POURING OF CONCRETE OR BACKFILLING.
3. THE LOCATION OF CATV FACILITIES SHOWN ON PLANS ARE FROM EXISTING RECORDS WITH VARYING DEGREES OF ACCURACY AS TO ITS ACTUAL FIXED LOCATION. THE CONTRACTOR SHALL USE EXTREME CAUTION WHEN WORKING IN CLOSE PROXIMITY OF CATV FACILITIES.
4. THE CONTRACTOR SHALL OBTAIN EXCAVATION PERMIT CLEARANCE FROM OCEANIC'S ENGINEERING SECTION LOCATED AT 200 AKAMAINUI STREET, MILILANI TECH PARK.
5. FOR ANY FIELD ASSISTANCE OR VERIFICATION OF CATV FACILITIES, THE CONTRACTOR SHALL CALL THE TECHNICAL OPERATIONS CENTER AT 623-8378.
6. ANY WORK REQUIRED TO RELOCATE CATV FACILITIES SHALL BE DONE BY OCEANIC CABLE AND THE CONTRACTOR SHALL BE RESPONSIBLE FOR ALL COORDINATION REQUIREMENTS AND ASSOCIATED COSTS.
7. ANY DAMAGE TO OCEANIC'S FACILITIES SHALL BE REPORTED TO OCI'S REPAIR DISPATCH DEPARTMENT AT 625-8437 OR 625-8866.
8. THE CONTRACTOR SHALL TUNNEL UNDER EXISTING CONCRETE CURB AND GUTTER AS NECESSARY TO EXTEND CONDUIT INTO EXISTING CATV PULLBOX AND INTO THE PROPOSED POWER SUPPLY PULLBOX.
9. AT LOCATIONS WHERE EXISTING CATV PULLBOX REPLACEMENT IS PROPOSED, THE CONTRACTOR SHALL TAKE ALL NECESSARY PRECAUTION NOT TO DAMAGE THE EXISTING CABLES IN THE PULLBOX. ALL DAMAGES TO EXISTING CABLES SHALL BE REPAIRED BY OCEANIC CABLE AND PAID FOR BY THE CONTRACTOR.
10. FOR UNDERGROUND CABLE LOCATING AND MARKING, FIVE WORKING DAYS ADVANCE NOTICE IS REQUIRED. THREE WORKING DAYS ADVANCED IS REQUIRED FOR ANY INSPECTION BY A DESIGNATED REPRESENTATIVE. CONTRACTOR SHALL TAKE NECESSARY PRECAUTIONS NOT TO DAMAGE EXISTING CABLES OR DUCTS. OCEANIC'S INSPECTOR OR DESIGNATED REPRESENTATIVE IS REQUIRED TO BE AT ANY JOB SITE WHENEVER THERE WILL BE A BREAKAGE INTO OR ENTRY INTO ANY STRUCTURE THAT CONTAIN OCEANIC'S FACILITIES.
11. ALL CONSTRUCTION MUST BE INSPECTED AND APPROVED BY OCEANIC PRIOR TO THE INSTALLATION OF ANY OF ITS FACILITIES AND THE ENERGIZING OF ITS SYSTEM.
12. CONTRACTOR AND/OR CUSTOMER SHALL PROVIDE OCEANIC WITH SUFFICIENT INSTALLATION TIME IN THEIR OCCUPANCY TIME TABLE.
13. ALL OCEANIC DUCTS AND CONDUITS SHALL BE INSTALLED WITH NEPTCO 1800WP MULETAPE, GTE HAWAIIAN TEL CODE NO. 571154.

U.S. ARMY SIGNAL CORPS NOTES:

1. THE CONTRACTOR SHALL TAKE NECESSARY PRECAUTIONS NOT TO DAMAGE EXISTING CABLES OR DUCTS. ANY WORK INVOLVING EXISTING CABLES, DUCTS OR STRUCTURES CONTAINING SIGNAL CORPS FACILITIES SHALL BE COORDINATED WITH THE U.S. ARMY DIRECTORATE OF INFORMATION MANAGEMENT'S (DOIM) REPRESENTATIVE.
2. THE CONTRACTOR SHALL NOTIFY THE U.S. ARMY DOIM PRIOR TO PROCEEDING WITH WORK ON THE SIGNAL CORPS SYSTEM, 72 HOURS IN ADVANCE (PHONE 428-8071 OR 282-3857).
3. THE CONTRACTOR WILL BE RESPONSIBLE FOR ANY DAMAGES TO THE EXISTING SIGNAL CORPS SYSTEM. ANY AND ALL DAMAGES SHALL BE IMMEDIATELY REPORTED TO THE U.S. ARMY DOIM AND REPAIRED AT NO COST TO THE STATE.
4. EXISTING SIGNAL CORPS DUCTLINE MAY CONSIST OF TRANSITE OR LEAD-CONTAINING MATERIAL. IF REMOVED, THE TRANSITE AND LEAD-CONTAINING MATERIAL SHALL BE PROPERLY DISPOSED.

MECHANICAL/ELECTRICAL DESIGN AND ENGINEERING DIVISION NOTES:

1. THE CONTRACTOR SHALL NOTIFY THE JOINT POLE COMMITTEE TWO (2) WEEKS IN ADVANCE OF ANY RELOCATION OF UTILITY POLE(S) THAT MAY BE NECESSARY.
2. THE CONTRACTOR SHALL NOTIFY THE MECHANICAL/ELECTRICAL DESIGN AND ENGINEERING DIVISION, DEPARTMENT OF DESIGN AND CONSTRUCTION, THREE (3) WORKING DAYS PRIOR TO COMMENCING WORK ON THE STREET LIGHTING SYSTEM OR FIBER OPTIC COMMUNICATIONS SYSTEM. (PHONE: 527-5002).
3. THE STREET LIGHTING SYSTEM SHALL BE KEPT OPERATIONAL DURING CONSTRUCTION. ANY RELOCATION REQUIRED SHALL BE APPROVED BY THE MECHANICAL/ELECTRICAL DESIGN AND ENGINEERING DIVISION. DEPARTMENT OF DESIGN AND CONSTRUCTION, AND PAID FOR BY THE CONTRACTOR.
4. THE CONTRACTOR SHALL BE RESPONSIBLE FOR ANY DAMAGES TO THE EXISTING STREET LIGHTING FACILITIES. ANY AND ALL DAMAGES TO THESE FACILITIES SHALL BE REPAIRED BY THE CONTRACTOR AT HIS COST IN ACCORDANCE WITH THE REQUIREMENTS OF THE CITY AND COUNTY OF HONOLULU.
5. THE CONTRACTOR SHALL BE RESPONSIBLE FOR ANY DAMAGES TO THE CITY'S EXISTING COMMUNICATIONS FIBER OPTIC CABLE SYSTEM. ANY AND ALL DAMAGES TO THESE FACILITIES SHALL BE REPAIRED BY THE CONTRACTOR AT HIS COST IN ACCORDANCE WITH THE REQUIREMENTS OF THE CITY AND COUNTY OF HONOLULU.

TRAFFIC SIGNAL AND TECHNOLOGY DIVISION NOTES:

1. THE CONTRACTOR SHALL NOTIFY THE TRAFFIC SIGNAL AND TECHNOLOGY DIVISION, DEPARTMENT OF TRANSPORTATION SERVICES THREE (3) WORKING DAYS PRIOR TO COMMENCING WORK ON THE TRAFFIC SIGNAL SYSTEM (PHONE: 523-4589).
2. THE TRAFFIC SIGNAL SYSTEM SHALL BE KEPT OPERATIONAL DURING CONSTRUCTION. ANY RELOCATION REQUIRED SHALL BE APPROVED BY THE TRAFFIC SIGNAL AND TECHNOLOGY DIVISION, DEPARTMENT OF TRANSPORTATION SERVICES, AND PAID FOR BY THE CONTRACTOR.
3. THE CONTRACTOR SHALL BE RESPONSIBLE FOR ANY DAMAGES TO THE EXISTING TRAFFIC SIGNAL FACILITIES, INCLUDING THE TRAFFIC SIGNAL INTERCONNECT SYSTEM. ANY AND ALL DAMAGES TO THESE FACILITIES SHALL BE REPAIRED BY THE CONTRACTOR AT HIS COST IN ACCORDANCE WITH THE REQUIREMENTS OF THE CITY AND COUNTY OF HONOLULU.
4. THE CONTRACTOR SHALL BE RESPONSIBLE FOR ANY DAMAGES TO THE EXISTING TRAFFIC SIGNAL FIBER OPTIC CABLE SYSTEM. ANY AND ALL DAMAGES TO THESE FACILITIES SHALL BE REPAIRED BY THE CONTRACTOR AT HIS COST IN ACCORDANCE WITH THE REQUIREMENTS OF THE CITY AND COUNTY OF HONOLULU.

NOTE:

REFER TO SHEETS G-3, G-4 AND G-5 FOR ADDITIONAL REQUIREMENTS AND CONSTRUCTION NOTES PERTAINING TO OTHER UTILITIES AND TRADES.

DRAWING REVIEW

Reviewed for HECO's Facilities Only

Date 8/9/00 By [signature]

Engineering Department
Hawaiian Electric Company, Inc.

HECO's review of these drawings shall in no way relieve the Customer, its Consultant, its Contractor or anyone acting on the Customer's behalf from the responsibility for engineering, design, materials and any other liability associated with this project.

APPROVED:

HAWAIIAN ELECTRIC COMPANY, INC — DATE

[signature] 8-4-00
OCEANIC CABLEVISION — DATE

[signature] 8/1/00
CHIEF, MECHANICAL/ELECTRICAL DESIGN AND ENGINEERING DIVISION
CITY AND COUNTY OF HONOLULU
(FOR STREET LIGHT WORK AND CITY COMMUNICATIONS) — DATE

[signature] 8/2/00
CHIEF, TRAFFIC SIGNAL AND TECHNOLOGY DIVISION
DEPARTMENT OF TRANSPORTATION SERVICES
CITY AND COUNTY OF HONOLULU
(FOR TRAFFIC SIGNAL WORK ONLY) — DATE

[signature] 8/1/00
CHIEF, TRAFFIC REVIEW BRANCH
DEPARTMENT OF PLANNING AND PERMITTING
CITY AND COUNTY OF HONOLULU — DATE

REVISION	DATE	DESCRIPTION	MADE BY	APPROVED

Planning - Engineering - Environmental Services - Photogrammetry - Surveying - Construction Management
R. M. TOWILL CORPORATION
808 842 1133 420 Waiakamilo Road Suite 411 Honolulu Hawaii 96817-4941

VINCENT K. MIYAGAWA — LICENSED PROFESSIONAL ENGINEER — No. 4534-E — HAWAII, U.S.A.

THIS WORK WAS PREPARED BY ME OR UNDER MY SUPERVISION.
ECS, INC.
By [signature]
Its PROJECT ENGINEER
Date JULY 21, 2000

HAWAII COMMUNITY DEVELOPMENT AUTHORITY
STATE OF HAWAII
HONOLULU, HAWAII
KAKA'AKO COMMUNITY DEVELOPMENT DISTRICT
IMPROVEMENT DISTRICT 9
ILALO STREET IMPROVEMENTS

UTILITY COMPANY CONSTRUCTION NOTES

ENGINEER: MA — CHECKED BY: VM
DRAFTSMAN: CM — DATE: JULY 21, 2000
[signature]
EXECUTIVE DIRECTOR, HAWAII COMMUNITY DEVELOPMENT AUTHORITY

FILENAME: 60-3252

FILE	POCKET	FOLDER	NO.

GENERAL NOTES:

1. INSTALLATION OF A GTE HAWAIIAN TEL DUCTLINE SYSTEM SHALL CONFORM WITH THE REQUIREMENTS OF THE GTE HAWAIIAN TEL "STANDARD SPECIFICATION FOR PLACING UNDERGROUND SYSTEMS" DATED MARCH 1999, ALL SUBSEQUENT AMENDMENTS AND ADDITIONS, AND ALL OTHER PERTINENT STANDARDS FOR TELEPHONE CONSTRUCTION. CONTRACTOR SHALL FAMILIARIZE HIS PERSONNEL BY OBTAINING APPLICABLE SPECIFICATIONS.

2. FOR UNDERGROUND CABLE LOCATING AND MARKING, FIVE WORKING DAYS ADVANCED NOTICE IS REQUIRED. THREE WORKING DAYS ADVANCED NOTICE IS REQUIRED FOR ANY INSPECTION BY A DESIGNATED REPRESENTATIVE. THE CONTRACTOR SHALL TAKE NECESSARY PRECAUTION NOT TO DAMAGE ANY EXISTING CABLES OR DUCTS. A GTE HAWAIIAN TEL INSPECTOR OR DESIGNATED REPRESENTATIVE IS REQUIRED TO BE AT ANY JOB SITE WHENEVER THERE WILL BE A BREAKAGE INTO OR ENTRY INTO ANY STRUCTURE THAT CONTAIN GTE HAWAIIAN TEL FACILITIES.

3. THE CONTRACTOR SHALL CLOSELY COORDINATE ALL WORK WITH GTE HAWAIIAN TEL. ALL TRENCHES MUST BE INSPECTED BY GTE HAWAIIAN TEL PRIOR TO BACKFILLING AND CONCRETE ENCASING OPERATIONS. THE CONTRACTOR SHALL NOTIFY GTE HAWAIIAN TEL INSPECTOR OR DESIGNATED REPRESENTATIVE AT LEAST 72 HOURS PRIOR TO THE EXCAVATION, BRACING, POURING OF CONCRETE OR BACKFILLING.

4. THE CONTRACTOR SHALL OBTAIN AN EXCAVATION PERMIT AND TONING REQUEST FROM GTE HAWAIIAN TEL'S EXCAVATION PERMIT SECTION, LOCATED AT 3239 UALENA STREET, THIRD FLOOR, TWO WEEKS PRIOR TO THE START OF CONSTRUCTION. HOURS OF BUSINESS ARE 7:00 A.M. TO 10:30 A.M. AND 11:30 A.M. TO 3:00 P.M., MONDAY THROUGH FRIDAY, EXCEPT HOLIDAYS.

5. THE LOCATION OF GTE HAWAIIAN TEL'S EXISTING FACILITIES ARE APPROXIMATE ONLY. THE CONTRACTOR SHALL EXERCISE EXTREME CAUTION AND SHALL MAINTAIN PROPER CLEARANCES WHENEVER CONSTRUCTION CROSSES OR IS IN CLOSE PROXIMITY TO GTE HAWAIIAN TEL'S FACILITIES. THE CONTRACTOR SHALL VERIFY THEIR LOCATIONS AND SHALL BE LIABLE FOR ANY DAMAGES TO GTE HAWAIIAN TEL'S FACILITIES. ANY DAMAGES SHALL BE REPORTED IMMEDIATELY TO GTE HAWAIIAN TEL'S REPAIR SECTION AT #611 (24 HOURS) OR TO THE EXCAVATION PERMIT SECTION AT 840-1444 DURING NORMAL WORK DAYS HOURS, MONDAY THROUGH FRIDAY, EXCEPT HOLIDAYS.

6. WHEN EXCAVATION IS ADJACENT TO OR BENEATH GTE HAWAIIAN TEL'S EXISTING STRUCTURES OR FACILITIES, THE CONTRACTOR SHALL:
   a. SHEET AND/OR BRACE THE EXCAVATION TO PREVENT SLIDES, CAVE-INS OR SETTLEMENTS TO ENSURE NO MOVEMENT TO GTE HAWAIIAN TELEPHONE COMPANY'S STRUCTURES OR FACILITIES.
   b. PROTECT EXISTING STRUCTURES AND/OR FACILITIES WITH BEAMS, STRUTS OR UNDERPINNING WHILE EXCAVATING BENEATH THEM TO ENSURE NO MOVEMENT TO GTE HAWAIIAN TEL'S STRUCTURES OR FACILITIES.

7. THE CONTRACTOR SHALL PROVIDE A 5/8" X 8' GALVANIZED GROUND ROD BELOW THE TELEPHONE CABINET OR BACKBOARD AND A #6 TW INSULATED GREEN GROUND WIRE WITH A THREE FOOT COIL. TELEPHONE CABINETS SHALL BE GROUNDED.

8. CONCRETE STRENGTH SHALL BE 3,000 PSI IN 28 DAYS.

9. FOR POLE BRACING INSTRUCTIONS SHOULD FIELD CONDITIONS AND/OR CONSTRUCTION PROCEDURES REQUIRE THAT POLES BE BRACED TO FACILITATE CONSTRUCTION, THE CONTRACTOR IS TO CONTACT THE GTE HAWAIIAN TEL INSPECTOR AT 840-2979 AT LEAST 72 HOURS IN ADVANCE.

10. SHOULD IT BECOME NECESSARY TO RELOCATE ANY GTE HAWAIIAN TEL FACILITIES, THE WORK SHALL BE DONE BY GTE HAWAIIAN TEL. THE CONTRACTOR SHALL BE RESPONSIBLE FOR ALL COORDINATION AND COSTS ASSOCIATED WITH THE RELOCATION.

11. ALL CONSTRUCTION MUST BE INSPECTED AND APPROVED BY GTE HAWAIIAN TEL PRIOR TO THE INSTALLATION OF ANY OF ITS FACILITIES AND THE ENERGIZING OF ITS SYSTEMS. GTE HAWAIIAN TEL WILL COMMENCE INSTALLATION ONLY AFTER THE CONSTRUCTION HAS BEEN APPROVED AND NO SOONER THAN THIRTY WORKING DAYS THEREAFTER. A PROJECT OF LARGE MAGNITUDE WILL REQUIRE MORE TIME.

12. THE CONTRACTOR SHALL FURNISH HIS CONSTRUCTION SCHEDULE FORTY-FIVE (45) WORKING DAYS PRIOR TO STARTING ANY GTE HAWAIIAN TEL WORK. CONTRACTOR SHALL PROVIDE GTE HAWAIIAN TEL WITH SUFFICIENT INSTALLATION TIME TO COMPLETE THEIR WORK.

13. CONTRACTOR SHALL FURNISH ALL LABOR AND MATERIALS.

CONDUIT NOTES:

1. UNLESS OTHERWISE INDICATED, ALL CONDUITS, SWEEPS, COUPLINGS, ADAPTERS, AND BELL ENDS PROVIDED FOR USAGE BY GTE HAWAIIAN TEL SHALL BE GT42 2" OR 4 " PVC CONDUIT MEETING GTE SPECIFICATION GTS-8342. REFER TO HTCO STANDARD DRAWING 34028 FOR INSTALLATION. SCHEDULE 40 CONDUIT IS ACCEPTABLE AS A SUBSTITUTE FOR GT42 CONDUIT EXCEPT THAT POLE RISER BENDS SHALL BE SCHEDULE 40 SUN-RESISTANT CONDUIT.

2. CONDUITS FROM UTILITY BOXES TO THE INDIVIDUAL LOTS SHALL BE CONSIDERED INCIDENTAL TO THEIR RESPECTIVE MAIN DUCT LINES. SAID CONDUITS SHALL BE GT42 4" PVC UNLESS OTHERWISE SHOWN (SEE ITEM 1 ABOVE).

3. WHEN UTILITY DUCTS ARE CONCRETE ENCASED AT INTERSECTION OF WATER PIPE AND UTILITY DUCTS, A 6" MINIMUM SEPARATION BETWEEN WATER PIPE AND TOP OF THE CONCRETE ENCASED UTILITY DUCTS SHALL BE MAINTAINED. STONES, ROCKS, ETC. SHALL NOT BE USED WITH BACKFILL MATERIAL. ONLY NONEXPANSIVE SELECT MATERIALS SHALL BE USED AS BACKFILL MATERIAL.

4. BENDS IN THE DUCT ALIGNMENT, DUE TO CHANGES IN GRADE, SHALL HAVE A MINIMUM RADIUS OF 20 FEET. ALL 90-DEGREES C-BENDS AT A POLE OR AT THE BUILDING FLOOR PENETRATION SHALL HAVE A BEND RADIUS OF TEN TIMES THE DIAMETER OF THE DUCT OR GREATER.

5. THE CONTRACTOR SHALL PLACE 8-MIL, 4" WIDE WARNING TAPE, ORANGE IN COLOR WITH A BLACK IMPRINTED MESSAGE "WARNING - STOP DIGGING - CALL GTE, COMMUNICATIONS CABLE BURIED BELOW, FAILURE TO COMPLY COULD RESULT IN LEGAL ACTION", 12" BELOW THE SURFACE OVER THE DUCT OR CONCRETE JACKET FOR THE ENTIRE LENGTH OF ALL DUCT INSTALLATIONS. SEE HTCO STANDARD DRAWING 34028. RECOMMENDED TAPE IS MANUFACTURED BY THOR ENTERPRISES, INC., SUN PRAIRIE, WI 53590 (PHONE: 1-800-827-8467) PART NUMBERS DTOGTE-41 (1000'), AND DTOGTE-46 (6000'). EQUIVALENT TAPES ARE ACCEPTABLE.

6. AFTER THE DUCTS ARE INSTALLED, BUT PRIOR TO CONCRETE ENCASEMENT, A MANDREL WITH A SQUARE FRONT NOT LESS THAN 12" LONG AND HAVING A DIAMETER OF 1/4" LESS THAN THE INSIDE DIAMETER OF THE DUCT, SHALL BE PULLED THROUGH EACH DUCT AFTER WHICH A BRUSH WITH STIFF BRISTLES SHALL BE PULLED THROUGH TO MAKE CERTAIN THAT NO PARTICLES OF EARTH, SAND, OR GRAVEL HAVE BEEN LEFT IN THE LINE. DUCTS SHALL BE COMPLETELY DRY AND CLEAN. ALL DUCTS SHALL BE CAPPED TO PREVENT ENTRY OF FOREIGN MATERIAL DURING CONSTRUCTION AND AT THE COMPLETION OF INSTALLATION. RECOMMENDED MANDRELS AND BRUSHES ARE MADE BY GENERAL MACHINE PRODUCTS CO. (GMP), TREVOSE, PA (PHONE: 215-357-5500). RECOMMENDED GMP PART NUMBER 8182-4R (TEST MANDREL FOR 4" CONDUIT), AND PART NUMBER 17094 (BRUSH FOR 4" CONDUIT) 2" DUCTS WILL REQUIRE CLEANING USING RAGS

7. ALL DUCTS AND CONDUITS SHALL HAVE AN #1800 POLYESTER MULE-TAPE (NEPTCO WP1800P, GTE HAWAIIAN TEL CODE NO. 571154) INSTALLED THROUGH ONE ENTIRE LENGTH WITH TWO FEET OF SLACK IN MANHOLES AND HANDHOLES, AND ONE FOOT OF SLACK IN PULLBOXES. THE MULE-TAPE SHALL BE RATED FOR 1800 LBS. OF PULL AND HAVE FOOTAGE MARKERS FOR MEASURING DUCT LENGTHS. THE NEPTCO MULETAPE IS AVAILABLE IN 3,000', 6,500' AND 10,000' REELS. THE NEPTCO MULETAPE IS PRELUBRICATED AND PRINTED WITH SEQUENTIAL FOOTAGE MARKINGS. USING THE NEPTCO MULETAPE, THE CONTRACTOR SHALL MEASURE AT LEAST ONE DUCT OF A COMMON DUCT RUN. THE DISTANCE SHALL BE MARKED ON THE RECORD PRINTS AND SUBMITTED TO GTE HAWAIIAN TEL INSPECTOR FOR RECORD KEEPING.

8. METALLIC ENTRANCE CONDUITS SHALL BE GROUNDED.

9. ALL CONDUITS WITHIN A BUILDING SHALL:
   A. BE INSTALLED IN THE SHORTEST AND STRAIGHTEST POSSIBLE RUN.
   B. HAVE NO SECTION LONGER THAN 100 FEET NOR CONTAIN MORE THAN TWO 90-DEGREE BENDS. AN APPROVED SIZED JUNCTION BOX OR GUTTER BOX SHALL BE PLACED IF THIS IS EXCEEDED.
   C. ALL BENDS SHALL BE LONG SWEEP-RADIUS BENDS BUT THE INSIDE RADIUS OF THE BEND MUST NEVER BE LESS THAN TEN TIMES THE DIAMETER OF THE CONDUIT.

HANDHOLES/MANHOLES NOTES:

1. ALL DUCTS ASSOCIATED WITH MANHOLES OR HANDHOLES SHALL BE INSTALLED TO PROVIDE ADEQUATE DRAINAGE TOWARD THE MANHOLES OR HANDHOLES (MINIMUM 0.25% SLOPE, UNLESS OTHERWISE NOTED). THE "THROUGH" DUCTS ENTERING MANHOLES AND HANDHOLES SHALL BE SPLAYED WITH A 20' TRANSITION AND ENTER THE MANHOLE/HANDHOLE 6" TO 8" FROM THE INSIDE EDGE OF THE WALL (SEE MANHOLE WALL ELEVATION DETAILS AND DUCT TRANSITION DETAIL).

2. 5' X 10' MANHOLES (HTCO STANDARD DRAWING 34108), 6' X 12' MANHOLES (HTCO STANDARD DRAWING 180020) MAY BE CAST-IN-PLACE OR PRECAST. IF USING PRECAST MANHOLES AND HANDHOLES, THE CONSTRUCTION JOINT BETWEEN PRECAST SECTIONS MUST BE THOROUGHLY CLEANED OF ALL DIRT OR OTHER DEBRIS, AND SHALL BE BONDED WITH A MASTIC OR SEALING COMPOUND WHEN INSTALLED TO PREVENT WATER ENTRY. THE MASTIC TAPE OR SEALING COMPOUND MUST COMPLETELY FILL THE CONSTRUCTION JOINT, AND COVER THE ENTIRE JOINT AREA. THE PRECAST SECTIONS MUST BE PLACED AS SOON AS THE SEALANT INSTALLATION IS COMPLETED. TWO COATS OF THERO-SEAL OR APPROVED EQUAL SHALL BE APPLIED TWELVE INCHES ON BOTH SIDES OF EXTERIOR JOINT AREAS.

3. BEFORE PLACING PRECAST SECTIONS, THE CONTRACTOR SHALL PROVIDE AT LEAST THREE TO SIX INCHES OF SAND OR BASE MATERIAL ON THE BOTTOM OF THE EXCAVATION. IN FLUID SOILS, OR SOILS VULNERABLE TO BECOMING FLUID, #9 OR 10 STONE (1/2" TO 3/4") MAY BE ADDED FOR STABILITY. THE BASE MATERIAL SHALL BE COMPACTED AND GRADED TO LEVEL.

4. THE MANHOLE COVER AND FRAME HAS A CLEAR OPENING OF 30" AND IS AVAILABLE AS A 5-5/8" HIGH FRAME (PART NO. R-1750-C1) OR AS A 10" HIGH FRAME (PART NO. R-1750-C) FROM NEENAH FOUNDRY COMPANY IN NEENAH, WI (PHONE: 1-800-558-5075). THE 10" HIGH FRAME SHALL BE SELECTED FOR NORMAL APPLICATIONS. THE 5-5/8" HIGH FRAME SHALL BE USED FOR APPLICATIONS WHERE THE DEPTH OF PAVEMENT DOWN TO THE CONCRETE MANHOLE SLAB IS SHALLOW AND LIMITED. THE MANHOLE ROOF SLAB OPENING IS 36""IN DIAMETER. THE COVER SHALL HAVE THE GTE LOGO AND BE EQUIPPED WITH TWO 1" DIAMETER LIFT HOLES 180 DEGREES APART. THE BOLTS THAT COME WITH THE COVER TO LOCK DOWN THE COVER ARE TO BE TURNED OVER TO THE GTE HAWAIIAN TEL INSPECTOR. DO NOT LOCK COVERS DOWN WITH THESE BOLTS. REFER TO HTCO STANDARD DRAWING 34086. A 4" MINIMUM BRICK COLLAR FOR NEW MANHOLES WILL BE PROVIDED IN CONFORMANCE WITH DPW MEMORANDUM 1-92. THIS COLLAR ALLOWS THE MANHOLE FRAME TO BE LOWERED WITHOUT MAJOR RECONSTRUCTION.

PULLBOX NOTES:

1. ALL TYPES 435TB (2' X 4') AND 435TB6 (2' X 6') PULLBOXES SHALL BE CONSTRUCTED WITH A 12" BASE AND A MINIMUM OF THREE 8" PRECAST SECTIONS. (REFER TO HTCO STANDARD DRAWINGS 34056 AND 34078). MODIFIED 3' X 5' PULLBOXES SHALL BE INSTALLED (REFER TO GTE HAWAIIAN TEL FOR 3' X 5' MODIFIED PULLBOX DETAILS). INSTALL ONE 5/8" X 8' GROUND ROD IN ALL OTHER GTE HAWAIIAN TEL PULLBOXES AND HANDHOLES, EXCEPT IN 436T METER TYPE BOXES (12" X 20").

2. AT NO TIME SHALL CEMENT MORTAR, WOOD OR ANY OTHER MATERIAL SHALL BE USED BETWEEN PRECAST SECTIONS. LEVELING OR RAISING OF PULLBOXES SHALL BE DONE AT THE BRICKWORK SECTION USING CEMENT MORTAR. THE PERMANENT INSTALLATION OF WOODEN WEDGES TO LEVEL OR RAISE THE PRECAST SECTIONS SHALL NOT BE PERMITTED.

3. CONCRETE PRECASTED BASE SHALL BE USED IN NEW CONSTRUCTION. BRICKS MAY BE USED AS AN ALTERNATIVE ONLY WHEN INTERCEPTING EXISTING DUCTS. THE MINIMUM LAYERS OF BRICKS TO BE USED SHALL ALWAYS BE AT LEAST ONE LAYER LOWER THAN THE LOWEST DUCT ENTERING THE PULLBOX. AT NO TIME, HOWEVER, SHALL THERE BE LESS THAN TWO LAYERS OF BRICKS ON EACH INSTALLATION.

4. UNLESS INDICATED OTHERWISE, CONDUITS SHALL ENTER BOXES AT 90-DEGREE ANGLE AND BE FLUSH TO THE WALL WITH FLARED OR BELL ENDS TO PREVENT CABLE DAMAGE.

5. THE BASE OR BRICKS SHALL BE PLACED ON A MINIMUM OF 3" OF #3 CRUSHED ROCK BACKFILL.

6. THE TOP OF ALL UTILITY BOXES SHALL BE 1" ABOVE FINISH GRADE IN NON-PAVED SHOULDERS UNLESS OTHERWISE NOTED. FINISH GRADE MATERIAL SHALL BE PLACED FROM THE TOP OF THE UTILITY BOX AND FEATHERED TWO FEET AROUND TO FINISHED GRADE

NOTE:

REFER TO SHEETS G-3, G-4 AND G-5 FOR ADDITIONAL REQUIREMENTS AND CONSTRUCTION NOTES PERTAINING TO OTHER UTILITIES AND TRADES.

APPROVED:

GTE HAWAIIAN TEL — DATE 8/1/00

REVISION	DATE	DESCRIPTION	MADE BY	APPROVED

Planning - Engineering - Environmental Services - Photogrammetry - Surveying - Construction Management
R. M. TOWILL CORPORATION
608 842 1133 420 Waiakamilo Road Suite 411 Honolulu Hawaii 96817-4941

VINCENT K. MIYAGAWA — LICENSED PROFESSIONAL ENGINEER — No. 6534-E — HAWAII, U.S.A.

THIS WORK WAS PREPARED BY ME OR UNDER MY SUPERVISION.
ECS, INC.
By
Its PROJECT ENGINEER
Date JULY 21, 2000

HAWAII COMMUNITY DEVELOPMENT AUTHORITY
STATE OF HAWAII
HONOLULU, HAWAII
KAKA'AKO COMMUNITY DEVELOPMENT DISTRICT
IMPROVEMENT DISTRICT 9
ILALO STREET IMPROVEMENTS

GTE HAWAIIAN TELEPHONE COMPANY GENERAL CONSTRUCTION NOTES

ENGINEER: MA — CHECKED BY: VM
DRAFTSMAN: CM — DATE: JULY 21, 2000
EXECUTIVE DIRECTOR, HAWAII COMMUNITY DEVELOPMENT AUTHORITY

FILENAME: 60-3263

FILE	POCKET	FOLDER	NO.

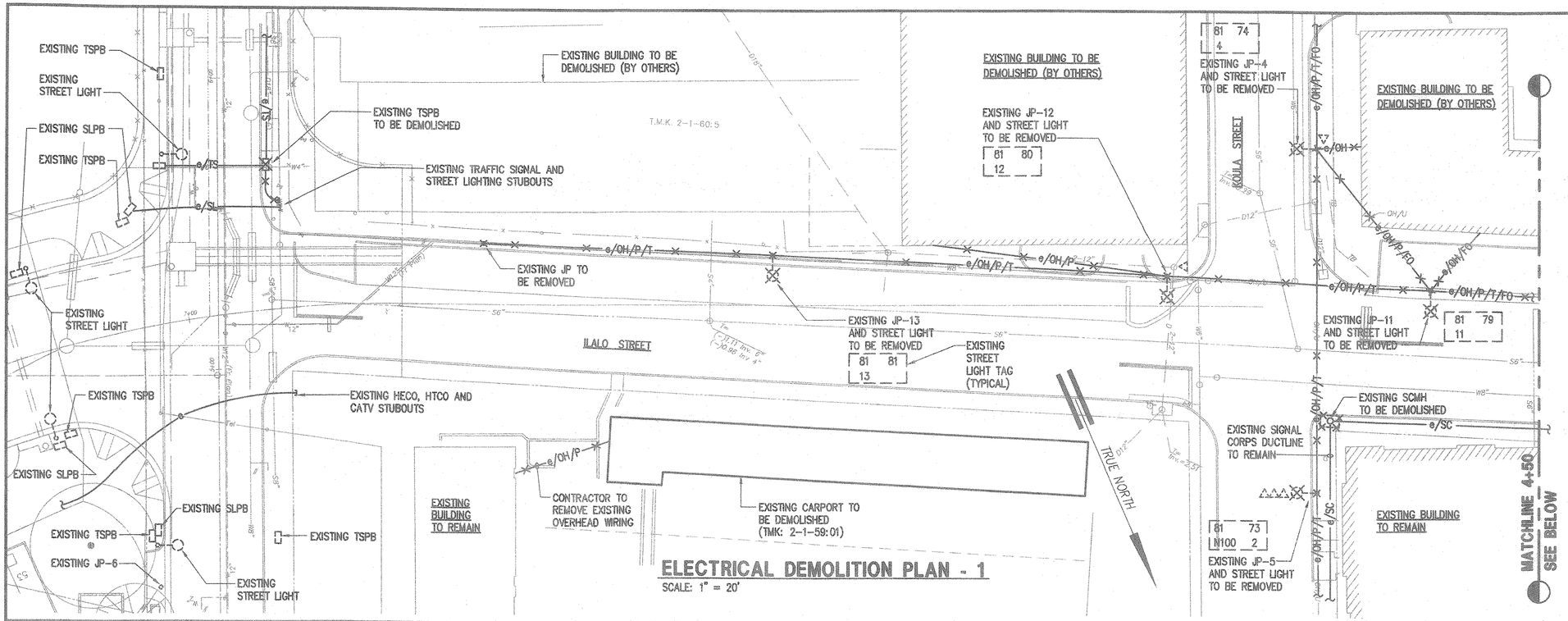

ELECTRICAL DEMOLITION PLAN - 1

SCALE: 1" = 20'

APPROVED:

HAWAIIAN ELECTRIC COMPANY, INC — DATE

GTE/HAWAIIAN TEL — 8/7/00 DATE

OCEANIC CABLEVISION — 8-4-00 DATE

CHIEF, MECHANICAL/ELECTRICAL — 8/1/00 DATE
DESIGN AND ENGINEERING DIVISION
DEPARTMENT OF DESIGN AND CONSTRUCTION
CITY AND COUNTY OF HONOLULU
(FOR STREET LIGHT WORK AND CITY COMMUNICATIONS)

CHIEF, TRAFFIC SIGNAL AND — 8/2/00 DATE
TECHNOLOGY DIVISION
DEPARTMENT OF TRANSPORTATION SERVICES
CITY AND COUNTY OF HONOLULU
(FOR TRAFFIC SIGNAL WORK ONLY)

CHIEF, TRAFFIC REVIEW BRANCH — 8/3/00 DATE
DEPARTMENT OF PLANNING AND PERMITTING
CITY AND COUNTY OF HONOLULU

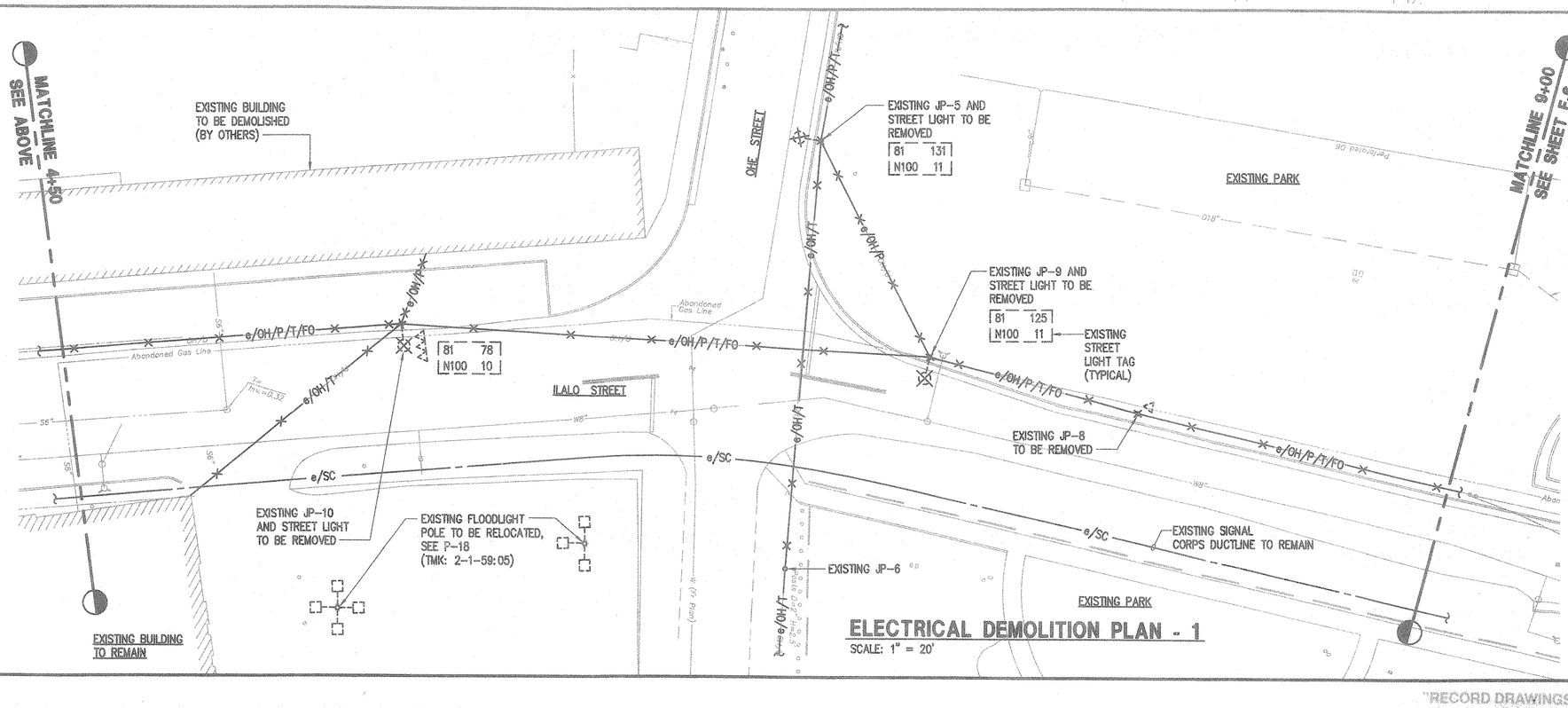

ELECTRICAL DEMOLITION PLAN - 1

SCALE: 1" = 20'

DRAWING REVIEW

Reviewed for HECO's Facilities Only
Date 8/9/00 By
Engineering Department
Hawaiian Electric Company, Inc.

HECO's review of these drawings shall in no way relieve the Customer, its Consultant, its Contractor or anyone acting on the Customer's behalf from the responsibility for engineering, design, materials, and any other liability associated with this Project.

GRAPHIC SCALE

20' 0' 20' 40' 60' 80'
1" = 20'

REVISION	DATE	DESCRIPTION	MADE BY	APPROVED

Planning – Engineering – Environmental Services – Photogrammetry – Surveying – Construction Management
R. M. TOWILL CORPORATION
808 842 1133 420 Waiakamilo Road Suite 411 Honolulu Hawaii 96817-4941

VINCENT K. MIYAGAWA
LICENSED PROFESSIONAL ENGINEER
No. 4534-E
HAWAII, U.S.A.

THIS WORK WAS PREPARED BY ME OR UNDER MY SUPERVISION.
ECS, INC.
By
Its PROJECT ENGINEER
Date JULY 21, 2000

HAWAII COMMUNITY DEVELOPMENT AUTHORITY
STATE OF HAWAII
HONOLULU, HAWAII
KAKA'AKO COMMUNITY DEVELOPMENT DISTRICT
IMPROVEMENT DISTRICT 9
ILALO STREET IMPROVEMENTS

ELECTRICAL DEMOLITION PLAN - 1

ENGINEER: MA — CHECKED BY: VM
DRAFTSMAN: LK — DATE: JULY 21, 2000

EXECUTIVE DIRECTOR, HAWAII COMMUNITY DEVELOPMENT AUTHORITY

FILE	POCKET	FOLDER	NO.

FILENAME: 60-3257

"RECORD DRAWINGS" E-5 SHEET 81 OF 140 SHEETS

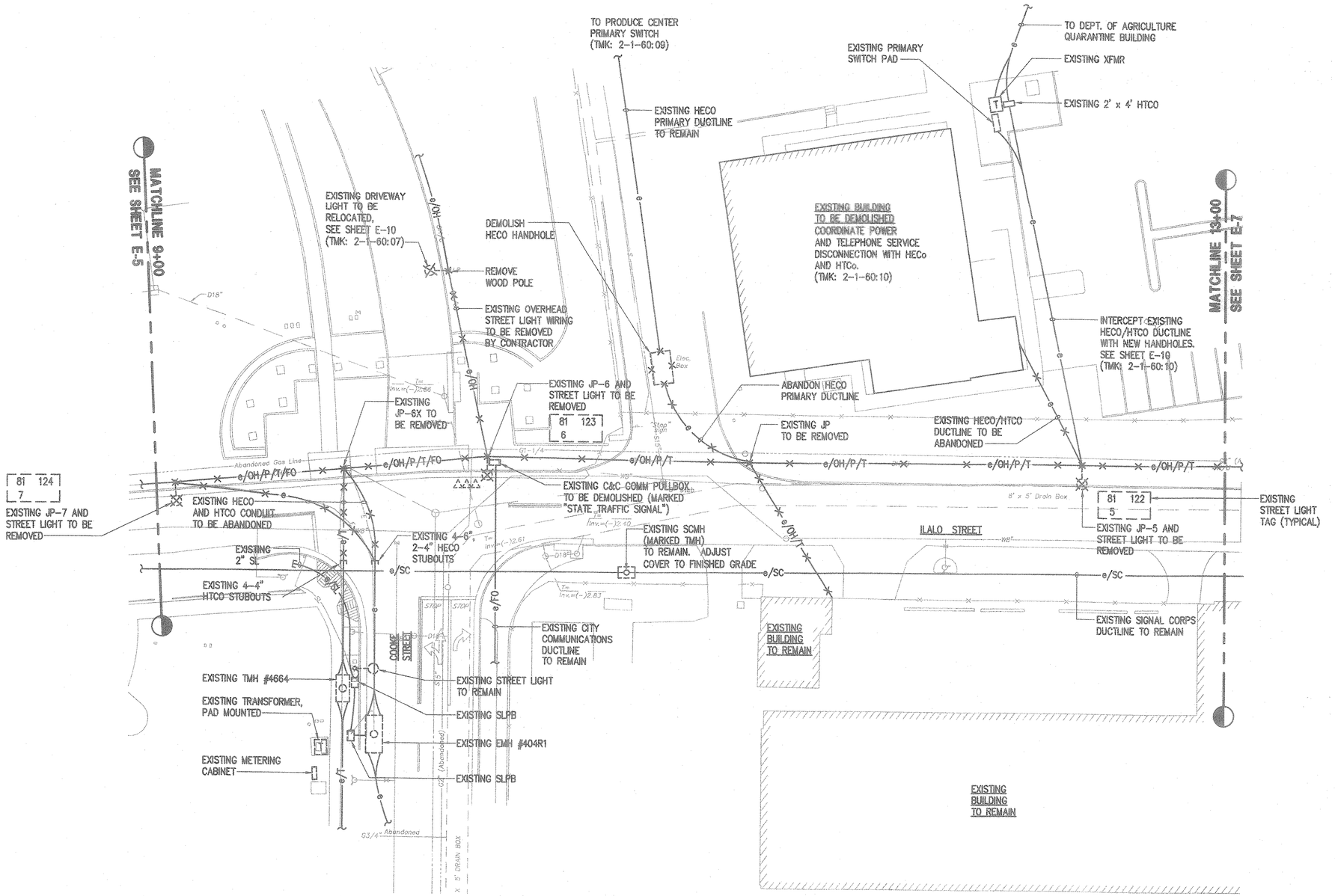

ELECTRICAL DEMOLITION PLAN - 2

SCALE: 1" = 20'

DRAWING REVIEW

Reviewed for HECO's Facilities Only

Date 8/4/00 By JKh

Engineering Department
Hawaiian Electric Company, Inc.

HECO's review of these drawings shall in no way relieve the Customer, its Consultant, its Contractor or anyone acting on the Customer's behalf from the responsibility for engineering, design, materials and any other liability associated with this project.

APPROVED:

HAWAIIAN ELECTRIC COMPANY, INC — DATE

GTE HAWAIIAN TEL — 8/7/00 DATE

OCEANIC CABLEVISION — 8-4-00 DATE

8/1/00
CHIEF, MECHANICAL/ELECTRICAL DESIGN AND ENGINEERING DIVISION
DEPARTMENT OF DESIGN AND CONSTRUCTION
CITY AND COUNTY OF HONOLULU
(FOR STREET LIGHT WORK AND CITY COMMUNICATIONS) — DATE

8/1/00
CHIEF, TRAFFIC SIGNAL AND TECHNOLOGY DIVISION
DEPARTMENT OF TRANSPORTATION SERVICES
CITY AND COUNTY OF HONOLULU
(FOR TRAFFIC SIGNAL WORK ONLY) — DATE

8/1/00
CHIEF, TRAFFIC REVIEW BRANCH — DATE
DEPARTMENT OF PLANNING AND PERMITTING
CITY AND COUNTY OF HONOLULU

GRAPHIC SCALE

20' 0' 20' 40' 60' 80'

1" = 20'

REVISION	DATE	DESCRIPTION	MADE BY	APPROVED

Planning - Engineering - Environmental Services - Photogrammetry - Surveying - Construction Management
R. M. TOWILL CORPORATION
808 842 1133 420 Waiakamilo Road Suite 411 Honolulu Hawaii 96817-4941

VINCENT K. MIYAGAWA LICENSED PROFESSIONAL ENGINEER No. 4534-E HAWAII, U.S.A.

THIS WORK WAS PREPARED BY ME OR UNDER MY SUPERVISION.
ECS, INC.
By
Its PROJECT ENGINEER
Date JULY 21, 2000

HAWAII COMMUNITY DEVELOPMENT AUTHORITY
STATE OF HAWAII
HONOLULU, HAWAII
KAKA'AKO COMMUNITY DEVELOPMENT DISTRICT
IMPROVEMENT DISTRICT 9
ILALO STREET IMPROVEMENTS
ELECTRICAL DEMOLITION PLAN - 2

ENGINEER: MA CHECKED BY: VM
DRAFTSMAN: LK DATE: JULY 21, 2000
EXECUTIVE DIRECTOR, HAWAII COMMUNITY DEVELOPMENT AUTHORITY

FILE	POCKET	FOLDER	NO.

FILENAME: 60-3258

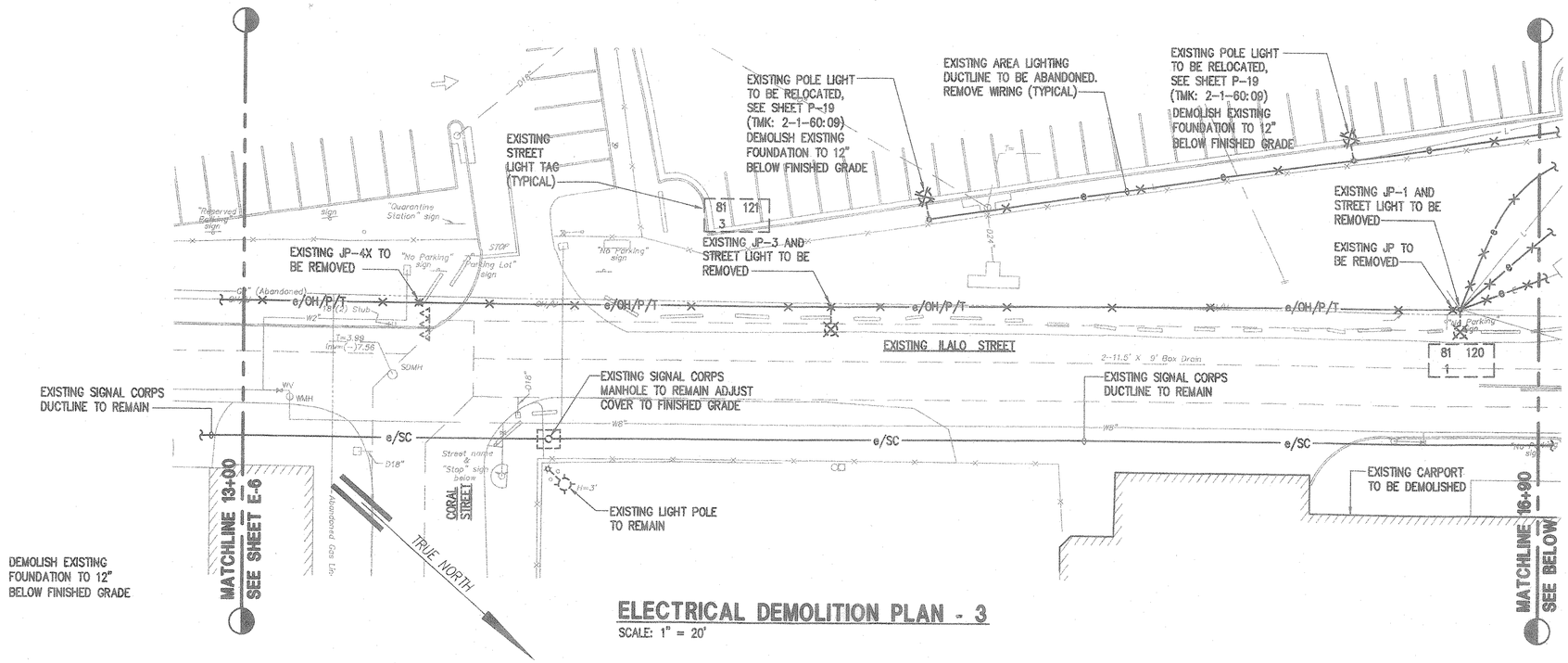

ELECTRICAL DEMOLITION PLAN - 3

SCALE: 1" = 20'

APPROVED:

HAWAIIAN ELECTRIC COMPANY, INC — DATE

GTE/HAWAIIAN TEL — 8/7/00 DATE

OCEANIC CABLEVISION — 8-4-00 DATE

CHIEF, MECHANICAL/ELECTRICAL — 8/1/00 DATE
DESIGN AND ENGINEERING DIVISION
DEPARTMENT OF DESIGN AND CONSTRUCTION
CITY AND COUNTY OF HONOLULU
(FOR STREET LIGHT WORK ONLY)

CHIEF, TRAFFIC SIGNAL AND — 8/2/00 DATE
TECHNOLOGY DIVISION
DEPARTMENT OF TRANSPORTATION SERVICES
CITY AND COUNTY OF HONOLULU
(FOR TRAFFIC SIGNAL WORK ONLY)

CHIEF, TRAFFIC REVIEW BRANCH — 8/3/00 DATE
DEPARTMENT OF PLANNING AND PERMITTING
CITY AND COUNTY OF HONOLULU

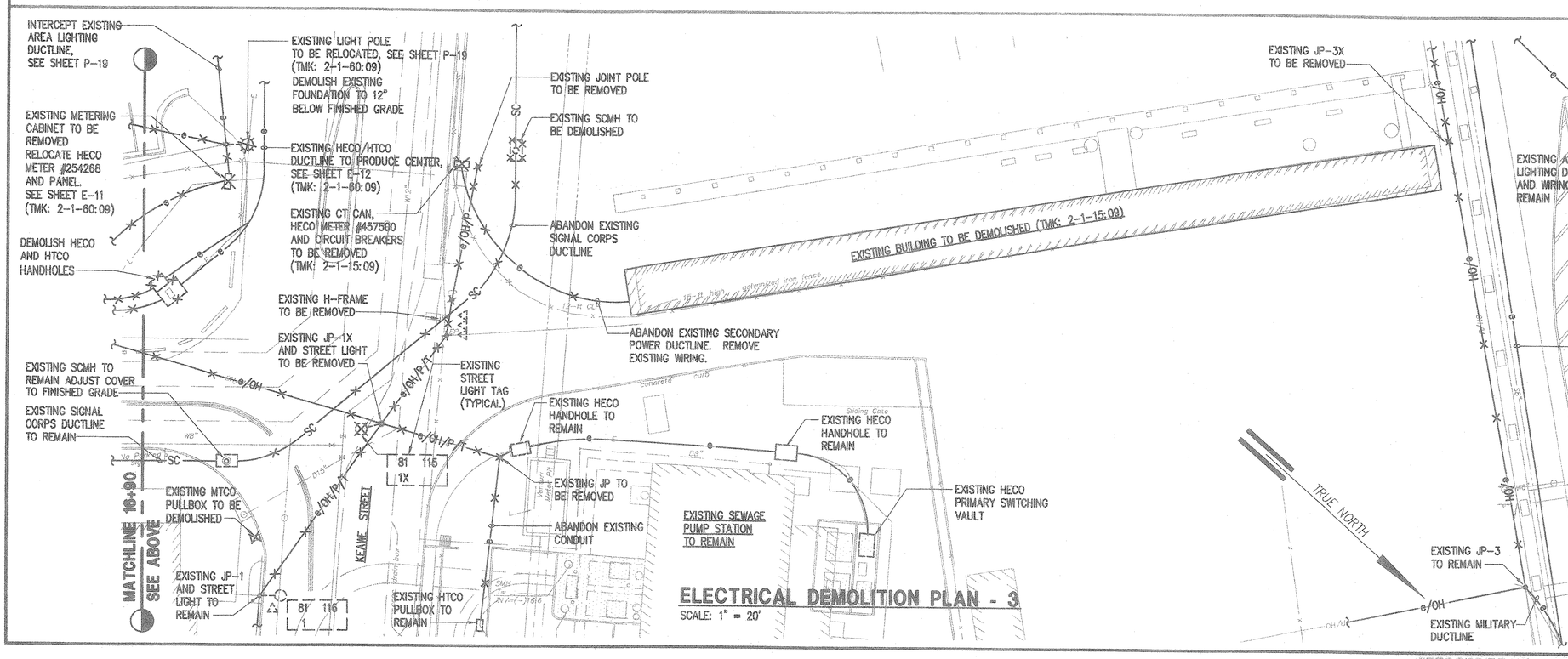

ELECTRICAL DEMOLITION PLAN - 3

SCALE: 1" = 20'

DRAWING REVIEW

Reviewed for HECO's Facilities Only

Date 8/9/00 By [signature]

Engineering Department
Hawaiian Electric Company, Inc.

HECO's review of these drawings shall in no way relieve the Customer, its Consultant, its Contractor or anyone acting on the Customer's behalf from the responsibility for engineering, design, materials, and any other liability associated with this Project.

GRAPHIC SCALE

20' 0' 20' 40' 60' 80'

1" = 20'

REVISION	DATE	DESCRIPTION	MADE BY	APPROVED

Planning – Engineering – Environmental Services – Photogrammetry – Surveying – Construction Management
R. M. TOWILL CORPORATION
808 842 1133 420 Waiakamilo Road Suite 411 Honolulu Hawaii 96817-4941

VINCENT K. MIYAGAWA LICENSED PROFESSIONAL ENGINEER No. 4534-E HAWAII, U.S.A.

THIS WORK WAS PREPARED BY ME OR UNDER MY SUPERVISION.

ECS, INC.

By [signature]

Its PROJECT ENGINEER

Date JULY 21, 2000

HAWAII COMMUNITY DEVELOPMENT AUTHORITY
STATE OF HAWAII
HONOLULU, HAWAII

KAKA'AKO COMMUNITY DEVELOPMENT DISTRICT
IMPROVEMENT DISTRICT 9
ILALO STREET IMPROVEMENTS

ELECTRICAL DEMOLITION PLAN- 3

ENGINEER: MA — CHECKED BY: VM

DRAFTSMAN: LK — DATE: JULY 21, 2000

[signature]
EXECUTIVE DIRECTOR, HAWAII COMMUNITY DEVELOPMENT AUTHORITY

FILE	POCKET	FOLDER	NO.

FILENAME: 60-3259

"RECORD DRAWINGS" E-7 SHEET 83 OF 140 SHEETS

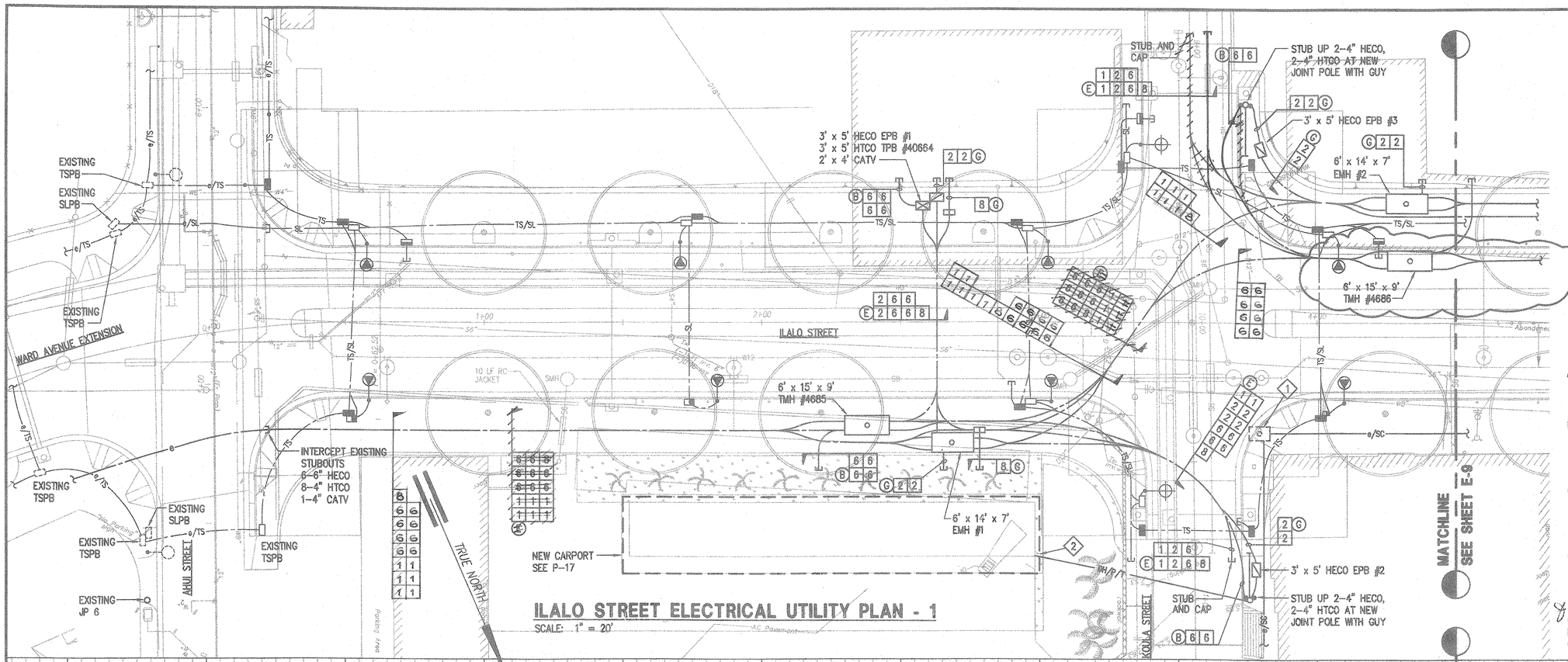

ILALO STREET ELECTRICAL UTILITY PLAN - 1

SCALE: 1" = 20'

NOTES:

1. EXISTING SIGNAL CORPS MANHOLE TO BE MODIFIED. REPLACE WITH NEW 5' x 8' x 6' MANHOLE PROTECT EXISTING COMMUNICATIONS CABLING DURING CONSTRUCTION
2. NEW SECONDARY ELECTRICAL AND TELEPHONE SERVICE TO CARPORT. PROVIDE WEATHERHEADS ABOVE ROOFLINE. SEE P-17.

APPROVED:

HAWAIIAN ELECTRIC COMPANY, INC — DATE

GTE/HAWAIIAN TEL — 2/5/01 DATE

OCEANIC CABLEVISION — 02-21-01 DATE

CHIEF, WASTEWATER BRANCH — 3/2/01 DATE
DEPARTMENT OF PLANNING AND PERMITTING
CITY AND COUNTY OF HONOLULU

DRAWING REVIEW

Reviewed for HECO's Facilities Only

Date 2/15/01 By

Engineering Department
Hawaiian Electric Company, Inc.

HECO's review of these drawings shall in no way relieve the Customer, its Consultant, its Contractor or anyone acting on the Customer's behalf from the responsibility for engineering, design, materials and any other liability associated with this project.

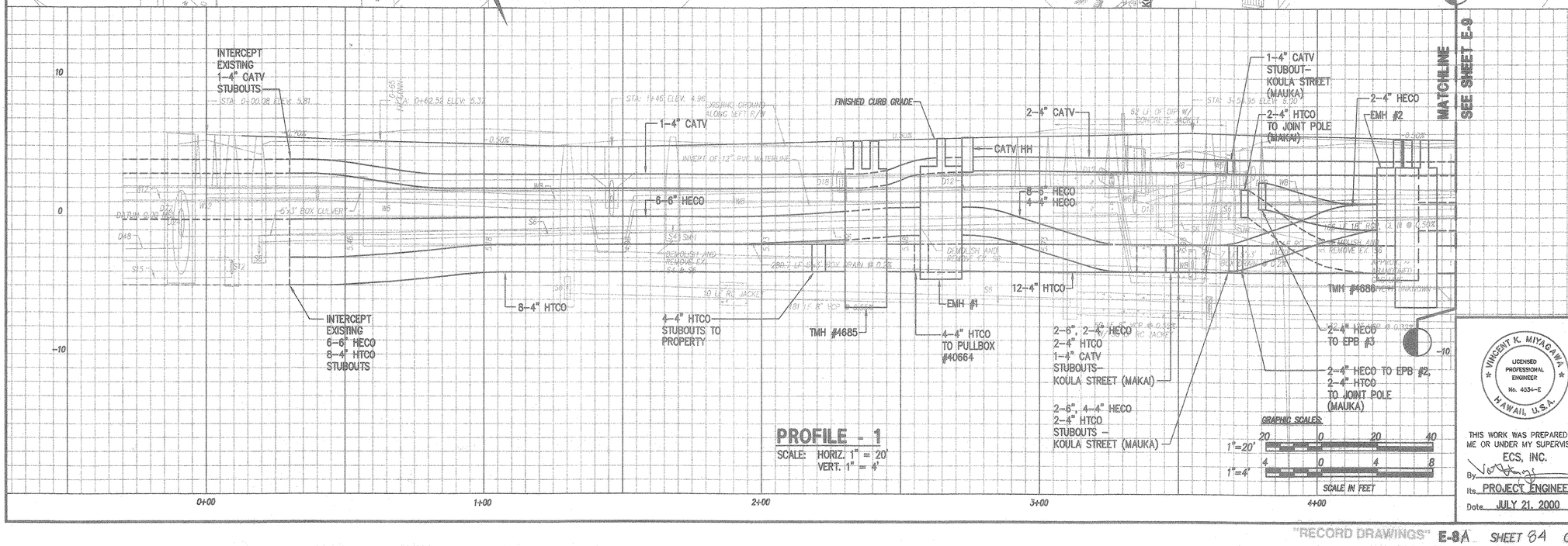

PROFILE - 1

SCALE: HORIZ. 1" = 20'
VERT. 1" = 4'

GRAPHIC SCALES

1"=20' 20 0 20 40

1"=4' 4 0 4 8

SCALE IN FEET

VINCENT K. MIYAGAWA
LICENSED PROFESSIONAL ENGINEER
No. 4934-E
HAWAII, U.S.A.

THIS WORK WAS PREPARED BY ME OR UNDER MY SUPERVISION.

ECS, INC.

By

Its PROJECT ENGINEER

Date JULY 21, 2000

REVISION	DATE	DESCRIPTION	MADE BY	APPROVED
1	1/9/01	NEW SHEET, REPLACES SHEET E-8	MA	

Planning – Engineering – Environmental Services – Photogrammetry – Surveying – Construction Management
R. M. TOWILL CORPORATION
808 842 1133 420 Waiakamilo Road Suite 411 Honolulu Hawaii 96817-4941

HAWAII COMMUNITY DEVELOPMENT AUTHORITY
STATE OF HAWAII
HONOLULU, HAWAII

KAKA'AKO COMMUNITY DEVELOPMENT DISTRICT
IMPROVEMENT DISTRICT 9
ILALO STREET IMPROVEMENTS
ILALO STREET ELECTRICAL UTILITY PLAN AND PROFILE - 1

ENGINEER: MA CHECKED BY: VM
DRAFTSMAN: RD DATE: 1/5/01

EXECUTIVE DIRECTOR, HAWAII COMMUNITY DEVELOPMENT AUTHORITY

FILE	POCKET	FOLDER	NO.

FILENAME: 60-32S2

"RECORD DRAWINGS" E-8A SHEET 84 OF 140 SHEETS

STUB UP 2-4" HECO, 2-4" HTCO AT NEW JOINT POLE AND GUY

3' x 5' HECO EPB #5

6' x 14' x 7' EMH #3

6' x 15' x 9' TMH #4687

ILALO STREET

5' x 8' HECO EPB #4

3' x 5' HTCO TPB #40665

EXISTING GUY

3' x 5' HTCO TPB #40666

3' x 5' HECO EPB #6

STUB UP AT 2-4" HTCO EXISTING JP-7

ONE STREET

EXIST R/W

TRUE NORTH

EXISTING SIGNAL CORPS DUCTLINE, PROTECT DURING CONSTRUCTION

MATCHLINE SEE SHEET E-8

MATCHLINE SEE SHEET E-10

ILALO STREET ELECTRICAL UTILITY PLAN - 2

SCALE: 1" = 20'

EXISTING GROUND ALONG LEFT R/W

REMOVE CATV HH ABANDON

STA: 5+13 ELEV: 7.21

2-4" CATV

2-4" HECO TO EPB #4
1-4" CATV TO PULLBOX

2-4" HECO
6-6" HECO

DEMOLISH & REMOVE EX. SS

INVERT OF 12" W/C WATER LINE

132 LF 12" WCP @ 0.32%

172 LF 12" WCP @ 0.32%

8-4" HTCO

4-4" HTCO TO TPB #40665

6-6" HECO
1-4" CATV

FINISH CURB GRADE

STA: 6+62.09 ELEV: 6.96

26 LF DIP W/ CONC JACKET

2-4" HECO TO EPB #5

CATV HH

STA: 7+80 ELEV: 5.37

STA: 7+90 ELEV: 5.32

STA: 8+00 ELEV: 5.27

25 LF DIP W/ CONC JACKET

STA: 8+30 ELEV: 5.12

STA: 8+70 ELEV: 5.30

1-4" CATV

6-6" HECO
1-4" CATV

2-4" HTCO TO JOINT POLE (MAKAI)

EMH #3

TMH #4687

8-4" HTCO

2-6", 2-4" HECO
2-4" HTCO
1-4" CATV
STUBOUTS
ONE STREET (MAKAI)

4-4" HTCO STUBOUTS TO PROPERTY

267 LF 15" WCP @ 0.32%

PROFILE - 2

SCALE: HORIZ. 1" = 20'
VERT. 1" = 4'

GRAPHIC SCALE:

1"=20' 20 0 20 40

1"=4' 4 0 4 8

SCALE IN FEET

5+00 6+00 7+00 8+00 9+00

NOTE:

1. RELOCATED LIGHT POLE SEE P-18.

APPROVED:

HAWAIIAN ELECTRIC COMPANY, INC — DATE

GTE HAWAIIAN TEL — 9/21/01 — DATE

OCEANIC CABLEVISION — 11-02-01 — DATE

CHIEF, WASTEWATER BRANCH — 11/26/01 — DATE
DEPARTMENT OF PLANNING AND PERMITTING
CITY AND COUNTY OF HONOLULU

DRAWING REVIEW

Reviewed for HECO's Facilities Only

Date 10/3/01 By

Engineering Department
Hawaiian Electric Company, Inc.

HECO's review of these drawings shall in no way relieve the Customer, its Consultant, its Contractor or anyone acting on the Customer's behalf from the responsibility for engineering, design, materials and any other liability associated with this project.

REVISION	DATE	DESCRIPTION	MADE BY	APPROVED
3	9/19/01	TELEPHONE DUCTLINE REALIGNED, RELOCATED HECO, HTCO PULLBOXES, NO EFFECT ON SEWERS.	MA	
2	9/19/01	NEW SHEET, REPLACES SHEET E-9A	MA	
1	1/9/01	NEW SHEET, REPLACES SHEET E-9	MA	

R. M. TOWILL CORPORATION
Planning – Engineering – Environmental Services – Photogrammetry – Surveying – Construction Management
808 842 1133 420 Waiakamilo Road Suite 411 Honolulu Hawaii 96817-4941

VINCENT K. MIYAGAWA
LICENSED PROFESSIONAL ENGINEER
No. 4534-E
HAWAII, U.S.A.

THIS WORK WAS PREPARED BY ME OR UNDER MY SUPERVISION.

ECS, INC.

By

Its PROJECT ENGINEER

Date JULY 21, 2000

HAWAII COMMUNITY DEVELOPMENT AUTHORITY
STATE OF HAWAII
HONOLULU, HAWAII

KAKA'AKO COMMUNITY DEVELOPMENT DISTRICT
IMPROVEMENT DISTRICT 9

ILALO STREET IMPROVEMENTS

ILALO STREET ELECTRICAL UTILITY PLAN AND PROFILE - 2

ENGINEER: MA CHECKED BY: VM

DRAFTSMAN: RD DATE: 1/5/01

EXECUTIVE DIRECTOR, HAWAII COMMUNITY DEVELOPMENT AUTHORITY

FILENAME: 60-32s3

"RECORD DRAWINGS" E-9B SHEET 85 OF 140 SHEETS

FILE	POCKET	FOLDER	NO.

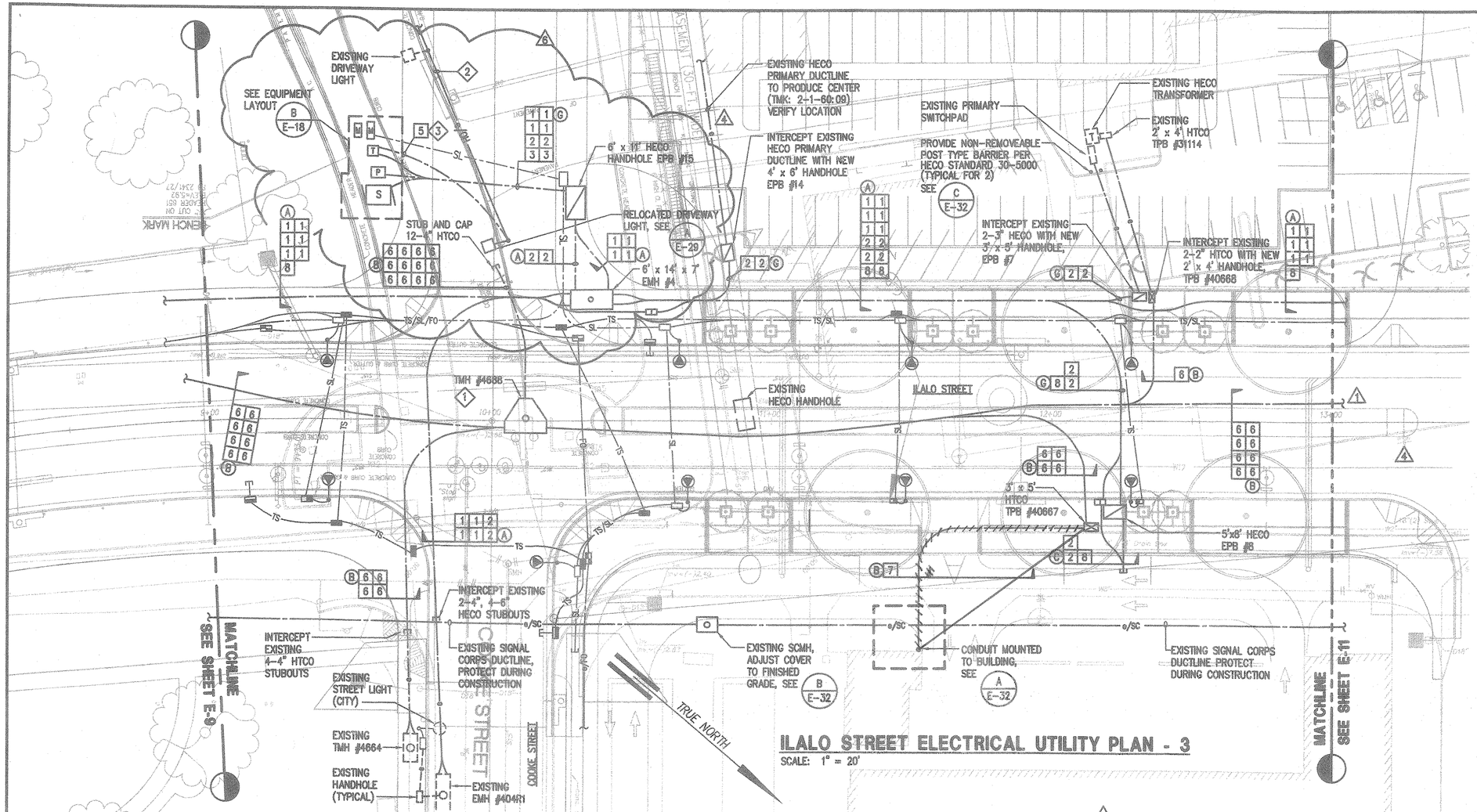

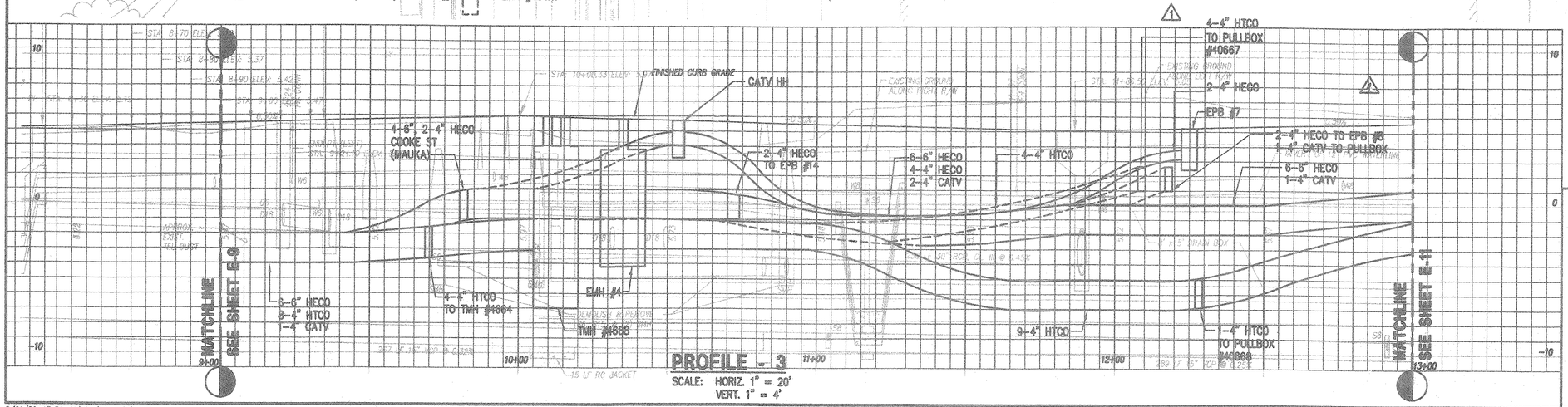

NOTES:

1. HTCO V3 x 10'-0" (MODIFIED) MANHOLE PER GTE HAWAIIAN TEL STANDARDS. SEE S-16 AND S-17
2. EXISTING OVERHEAD WIRING. SWING WIRING TO NEW WOOD POLE AND RECONNECT TO RELOCATED LUMINAIRE. SEE SHEET E-29.
3. 1-1/2" PVC SCHEDULE 40 CONDUIT, CONCRETE ENCASED, 2#6 RHW-USE.

APPROVED:

HAWAIIAN ELECTRIC COMPANY, INC DATE

5-31-02
GTE HAWAIIAN TEL DATE

06-05-02
OCEANIC CABLEVISION DATE

CHIEF, WASTEWATER BRANCH DATE
DEPARTMENT OF PLANNING AND PERMITTING
CITY AND COUNTY OF HONOLULU

DRAWING REVIEW
Reviewed for HECO's Facilities Only
Date 5/24/02 By
Engineering Department
Hawaiian Electric Company, Inc.
HECO's review of these drawings shall in no way relieve the Customer, its Consultant, its Contractor or anyone acting on the Customer's behalf from the responsibility for engineering, design, materials and any other liability associated with this project.

GRAPHIC SCALE:
1"=20' 20 0 20 40
1"=4' 4 0 4 8
SCALE IN FEET

REVISION	DATE	DESCRIPTION	MADE BY	APPROVED
5	4/5/02	RELOCATE EQUIPMENT PADS	MA	
4	9/19/01	NEW SHEET, REPLACES SHEET E-10A	MA	
1	1/9/01	NEW SHEET, REPLACES SHEET E-10	MA	

Planning – Engineering – Environmental Services – Photogrammetry – Surveying – Construction Management
R. M. TOWILL CORPORATION
808 842 1133 420 Waiakamilo Road Suite 411 Honolulu Hawaii 96817-4941

VINCENT K. MIYAGAWA LICENSED PROFESSIONAL ENGINEER No. 4534-E HAWAII, U.S.A.

THIS WORK WAS PREPARED BY ME OR UNDER MY SUPERVISION.
ECS, INC.
By
Its PROJECT ENGINEER
Date JULY 21, 2000

HAWAII COMMUNITY DEVELOPMENT AUTHORITY
STATE OF HAWAII
HONOLULU, HAWAII
KAKA'AKO COMMUNITY DEVELOPMENT DISTRICT
IMPROVEMENT DISTRICT 9
ILALO STREET IMPROVEMENTS
ILALO STREET ELECTRICAL UTILITY PLAN AND PROFILE - 3

ENGINEER: MA CHECKED BY: VM
DRAFTSMAN: RD DATE: 1/5/01

EXECUTIVE DIRECTOR, HAWAII COMMUNITY DEVELOPMENT AUTHORITY

FILE	POCKET	FOLDER	NO.

5/21/02-13:51 Y:\060\e60-32\60-32S4.dwg

"RECORD DRAWINGS" E-10B SHEET 86 OF 140 SHEETS

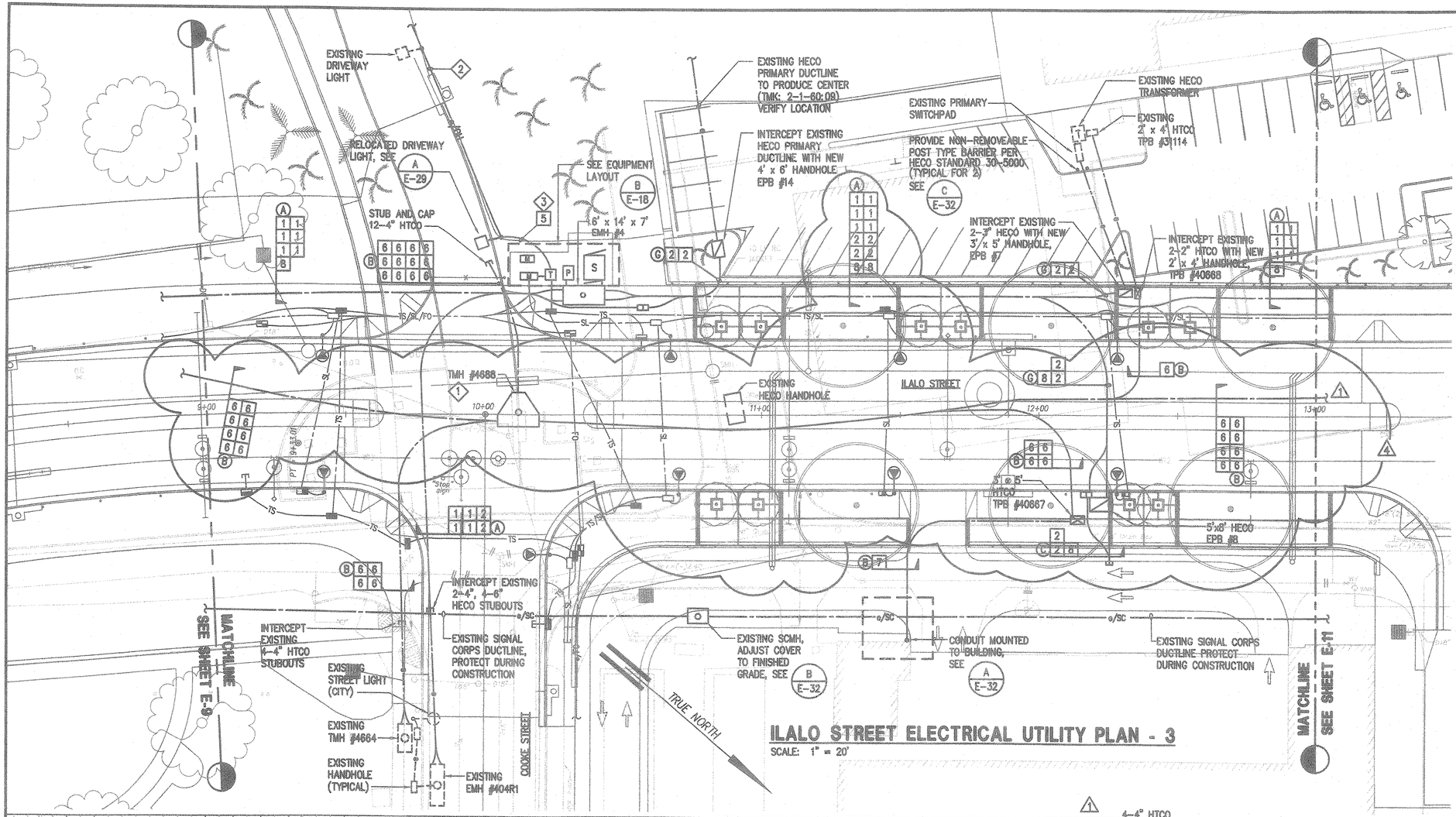

ILALO STREET ELECTRICAL UTILITY PLAN - 3

SCALE: 1" = 20'

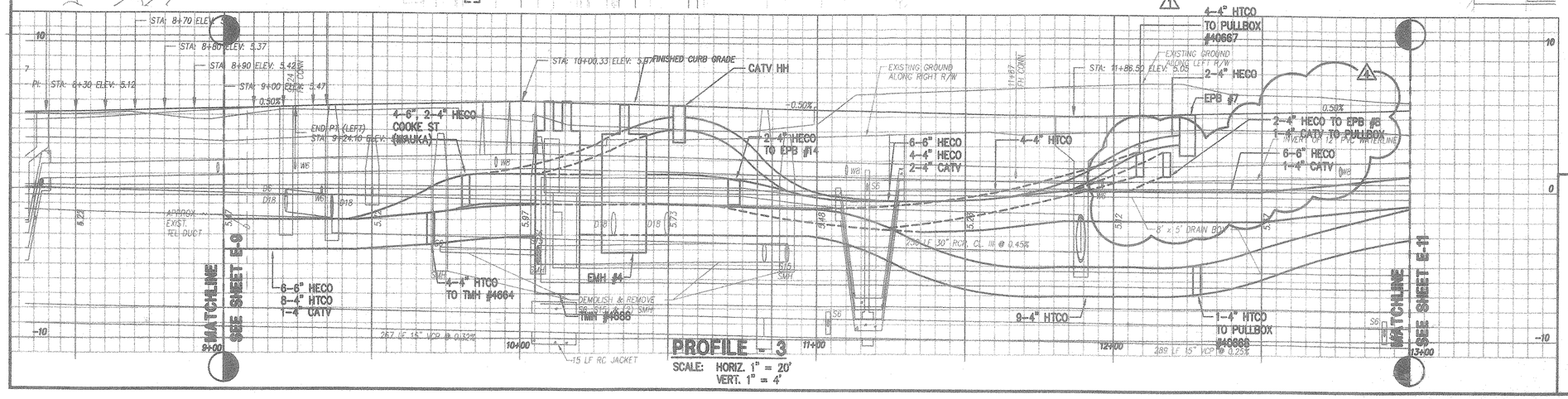

PROFILE - 3

SCALE: HORIZ. 1" = 20'
VERT. 1" = 4'

NOTES:

1. HTCO V3 x 10'-0" (MODIFIED) MANHOLE PER GTE HAWAIIAN TEL STANDARDS. SEE S-16 AND S-17
2. EXISTING OVERHEAD WIRING. SWING WIRING TO NEW WOOD POLE AND RECONNECT TO RELOCATED LUMINAIRE. SEE SHEET E-29.
3. 1-1/2" PVC SCHEDULE 40 CONDUIT, CONCRETE ENCASED, 2#6 RHW-USE.

APPROVED:

HAWAIIAN ELECTRIC COMPANY, INC — DATE

GTE HAWAIIAN TEL — 4/27/4 — DATE

OCEANIC CABLEVISION — Hez 01 — DATE

Wayne Jalomura — 11/20/01
CHIEF, WASTEWATER BRANCH — DATE
DEPARTMENT OF PLANNING AND PERMITTING
CITY AND COUNTY OF HONOLULU

DRAWING REVIEW
Reviewed for HECO's Facilities Only
Date 10/30/01 By
Engineering Department
Hawaiian Electric Company, Inc.
HECO's review of these drawings shall in no way relieve the Customer, its Consultant, its Contractor or anyone acting on the Customer's behalf from the responsibility for engineering, design, materials and any other liability associated with this project.

GRAPHIC SCALE:
1"=20' 20 0 20 40
1"=4' 4 0 4 8
SCALE IN FEET

REVISION	DATE	DESCRIPTION	MADE BY	APPROVED
6	4/5/02	DELETED HECO, HTCO, OCEANIC APPROVALS. REFER TO REVISED SHEET E-10B, NO EFFECT ON SEWERS	MA	
5	9/19/01	TELEPHONE DUCTLINE REALIGNED, RELOCATED HECO, HTCO PULLBOXES. NO EFFECT ON SEWERS	MA	
4	9/19/01	NEW SHEET, REPLACES SHEET E-10A	MA	
1	1/9/01	NEW SHEET, REPLACES SHEET E-10	MA	

Planning – Engineering – Environmental Services – Photogrammetry – Surveying – Construction Management
R. M. TOWILL CORPORATION
808 842 1133 420 Waiakamilo Road Suite 411 Honolulu Hawaii 96817-4941

VINCENT K. MIYAGAWA LICENSED PROFESSIONAL ENGINEER No. 4534-E HAWAII, U.S.A.

THIS WORK WAS PREPARED BY ME OR UNDER MY SUPERVISION.
ECS, INC.
By
Its PROJECT ENGINEER
Date JULY 21, 2000

HAWAII COMMUNITY DEVELOPMENT AUTHORITY
STATE OF HAWAII
HONOLULU, HAWAII
KAKA'AKO COMMUNITY DEVELOPMENT DISTRICT
IMPROVEMENT DISTRICT 9
ILALO STREET IMPROVEMENTS
ILALO STREET ELECTRICAL UTILITY PLAN AND PROFILE - 3

ENGINEER: MA — CHECKED BY: VM
DRAFTSMAN: RD — DATE: 1/5/01

EXECUTIVE DIRECTOR, HAWAII COMMUNITY DEVELOPMENT AUTHORITY

FILENAME: 60-3254

"RECORD DRAWINGS" E-10B SHEET 86A OF SHEETS

FILE	POCKET	FOLDER	NO.

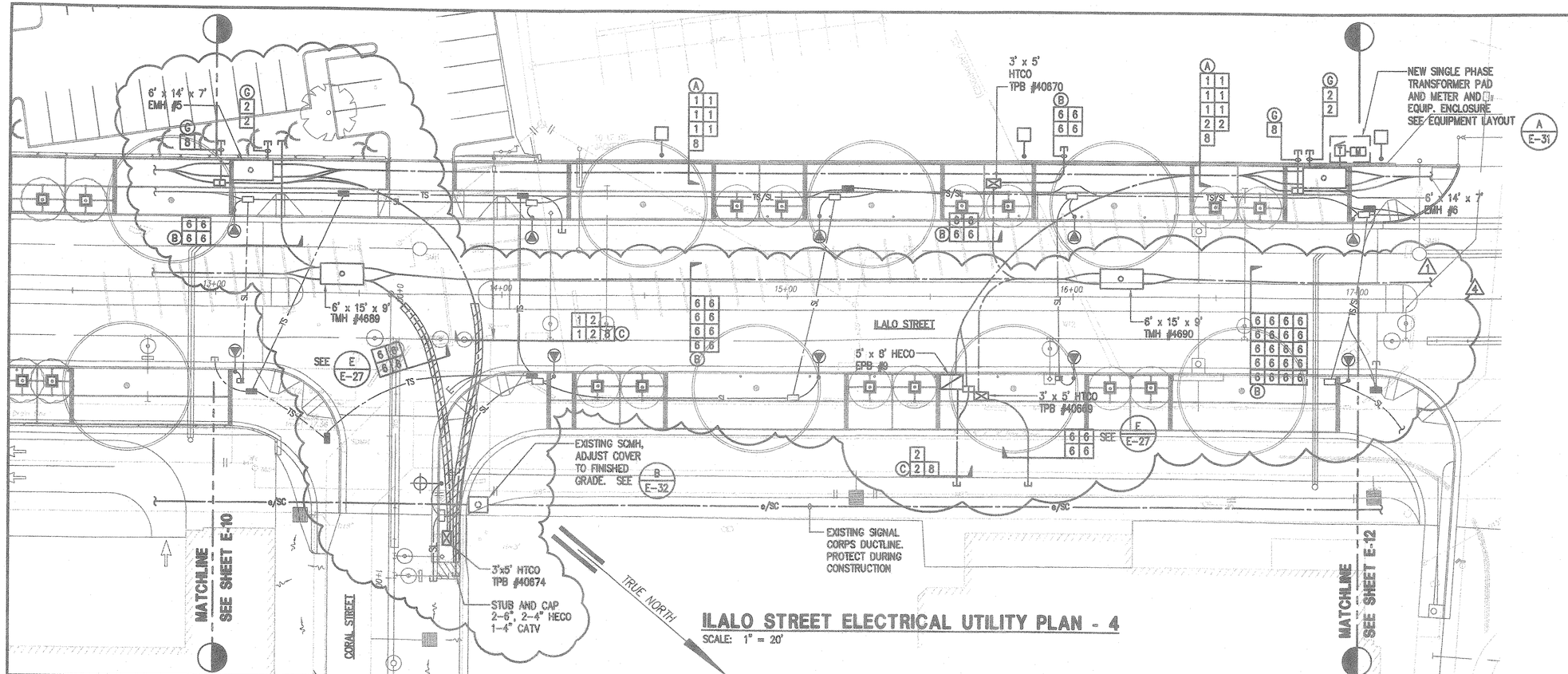

ILALO STREET ELECTRICAL UTILITY PLAN - 4

SCALE: 1" = 20'

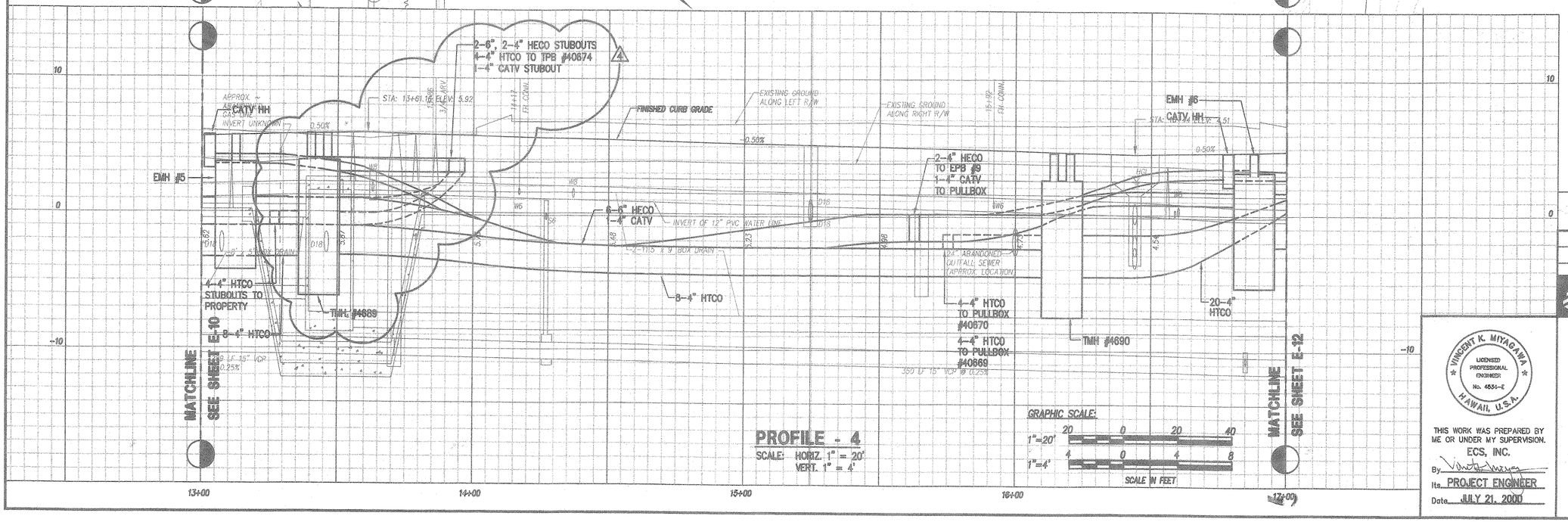

PROFILE - 4

SCALE: HORIZ. 1" = 20'
VERT. 1" = 4'

GRAPHIC SCALE:
1"=20' 20 0 20 40
1"=4' 4 0 4 8
SCALE IN FEET

APPROVED:

HAWAIIAN ELECTRIC COMPANY, INC DATE

GTE HAWAIIAN TEL 9/27/01 DATE

OCEANIC CABLEVISION DATE

CHIEF, WASTEWATER BRANCH 11/26/01 DATE
DEPARTMENT OF PLANNING AND PERMITTING
CITY AND COUNTY OF HONOLULU

DRAWING REVIEW

Reviewed for HECO's Facilities Only

Date 10/3/01 By

Engineering Department
Hawaiian Electric Company, Inc.

HECO's review of these drawings shall in no way relieve the Customer, its Consultant, its Contractor or anyone acting on the Customer's behalf from the responsibility for engineering, design, materials and any other liability associated with this project.

REVISION	DATE	DESCRIPTION	MADE BY	APPROVED
4	9/19/01	TELEPHONE DUCTLINE REALIGNED, RELOCATED HECO, HTCO PULLBOXES, NO EFFECT ON SEWERS.	MA	
3	9/19/01	NEW SHEET, REPLACES SHEET E-11A	MA	
1	1/9/01	NEW SHEET, REPLACES SHEET E-11	MA	

Planning – Engineering – Environmental Services – Photogrammetry – Surveying – Construction Management
R. M. TOWILL CORPORATION
808 842 1133 420 Waiakamilo Road Suite 411 Honolulu Hawaii 96817-4941

VINCENT K. MIYAGAWA LICENSED PROFESSIONAL ENGINEER No. 4634-E HAWAII, U.S.A.

THIS WORK WAS PREPARED BY ME OR UNDER MY SUPERVISION.
ECS, INC.
By
Its PROJECT ENGINEER
Date JULY 21, 2000

HAWAII COMMUNITY DEVELOPMENT AUTHORITY
STATE OF HAWAII
HONOLULU, HAWAII

KAKA'AKO COMMUNITY DEVELOPMENT DISTRICT
IMPROVEMENT DISTRICT 9
ILALO STREET IMPROVEMENTS

ILALO STREET ELECTRICAL UTILITY PLAN AND PROFILE - 4

ENGINEER: MA CHECKED BY: VM
DRAFTSMAN: RD DATE: 1/5/01

EXECUTIVE DIRECTOR, HAWAII COMMUNITY DEVELOPMENT AUTHORITY

FILE	POCKET	FOLDER	NO.

FILENAME: 60-3255

"RECORD DRAWINGS" E-11B SHEET 87 OF 140 SHEETS

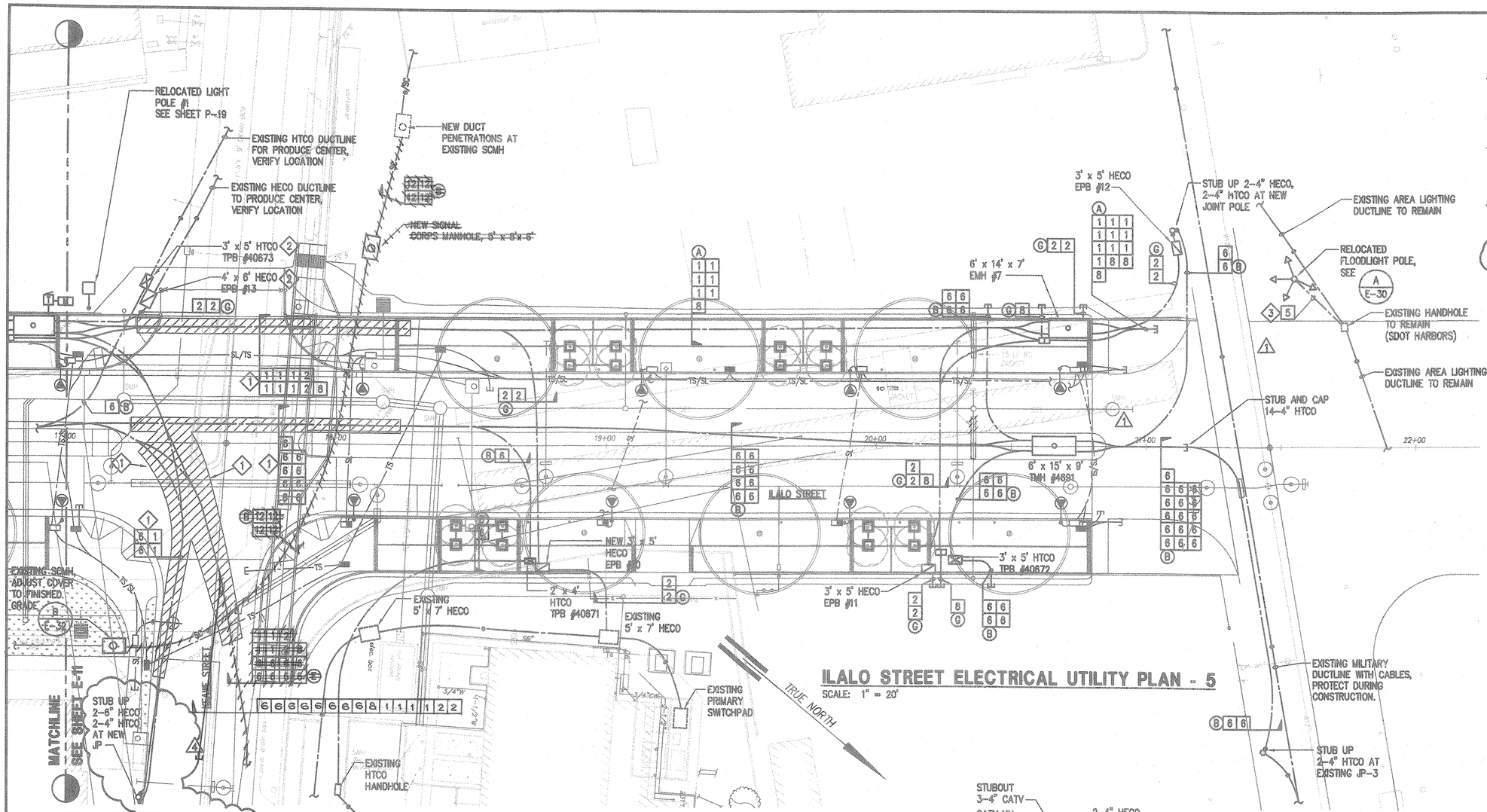

ILALO STREET ELECTRICAL UTILITY PLAN - 5

SCALE: 1" = 20'

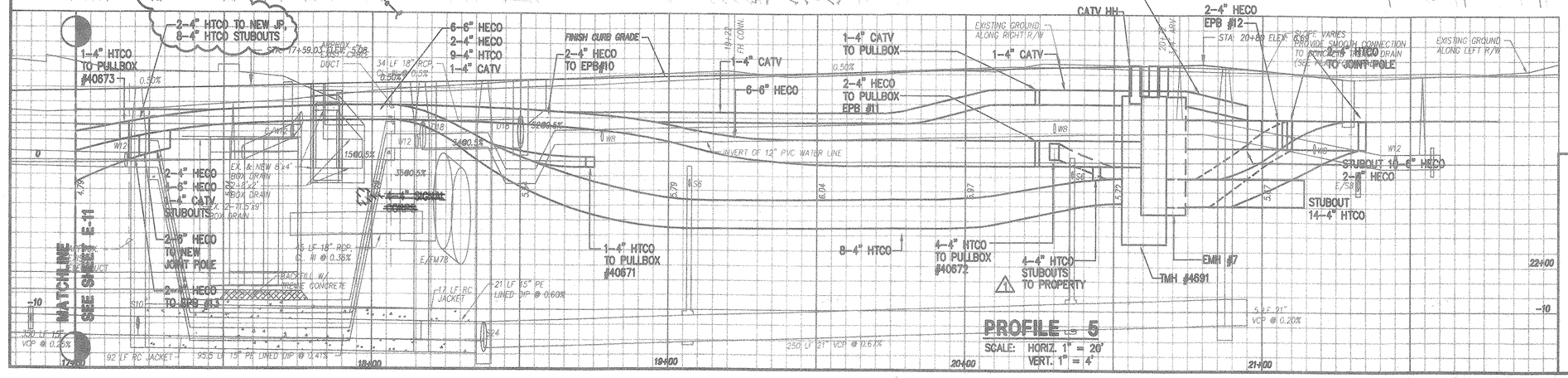

PROFILE - 5

SCALE: HORIZ. 1" = 20'
VERT. 1" = 4'

NOTES:

1. REINFORCED CONCRETE DUCTLINE 25 FEET EITHER END OF BOX DRAIN. FOR TYPES "1", "2" AND "8 DUCTS, SEE DUCT SECTION C, SHEET E-28 FOR TYPE "6" DUCT, SEE E/E-27
2. INTERCEPT EXISTING HECO AND HTCO SERVICE DUCTLINES WITH NEW HANDHOLES. SEE C/E-31
3. 1-1/4" PVC SCHEDULE 40 CONDUIT, 2#6 RHW-USE, 1#8 GND CONCRETE ENCASED.
4.
5. FOR KEAWE STREET PROFILE, SEE A/E-18

APPROVED:

HAWAIIAN ELECTRIC COMPANY, INC — DATE

GTE/HAWAIIAN TEL — 9/27/01 — DATE

OCEANIC CABLEVISION — 11-02-01 — DATE

CHIEF, WASTEWATER BRANCH — 11/26/01 — DATE
DEPARTMENT OF PLANNING AND PERMITTING
CITY AND COUNTY OF HONOLULU

DRAWING REVIEW

Reviewed for HECO's Facilities Only
Date 12/3/01 By
Engineering Department
Hawaiian Electric Company, Inc.

HECO's review of these drawings shall in no way relieve the Customer, its Consultant, its Contractor or anyone acting on the Customer's behalf from the responsibility for engineering, design, materials and any other liability associated with this project.

GRAPHIC SCALE:

1"=20' 20 0 20 40
1"=4' 4 0 4 8
SCALE IN FEET

REVISION	DATE	DESCRIPTION	MADE BY	APPROVED
4	9/19/01	TELEPHONE DUCTLINE REALIGNED, RELOCATED HECO, HTCO PULLBOXES NO EFFECT ON SEWERS.	MA	
3	8/18/01	NEW SHEET, REPLACES SHEET E-12A	MA	
1	1/9/01	NEW SHEET, REPLACES SHEET E-12	MA	

R. M. TOWILL CORPORATION
Planning – Engineering – Environmental Services – Photogrammetry – Surveying – Construction Management
808 842 1133 420 Waiakamilo Road Suite 411 Honolulu Hawaii 96817-4941

VINCENT K. MIYAGAWA
LICENSED PROFESSIONAL ENGINEER
No. 4534-E
HAWAII, U.S.A.

THIS WORK WAS PREPARED BY ME OR UNDER MY SUPERVISION.
ECS, INC.
By
Its PROJECT ENGINEER
Date JULY 21, 2000

HAWAII COMMUNITY DEVELOPMENT AUTHORITY
STATE OF HAWAII
HONOLULU, HAWAII
KAKA'AKO COMMUNITY DEVELOPMENT DISTRICT
IMPROVEMENT DISTRICT 9
ILALO STREET IMPROVEMENTS

ILALO STREET ELECTRICAL UTILITY PLAN AND PROFILE - 5

ENGINEER: MA
DRAFTSMAN: RD
CHECKED BY: VM
DATE: 1/5/01

EXECUTIVE DIRECTOR, HAWAII COMMUNITY DEVELOPMENT AUTHORITY

FILE	POCKET	FOLDER	NO.

FILENAME: 60-3256

"RECORD DRAWINGS" E-12B SHEET 88 OF 140 SHEETS

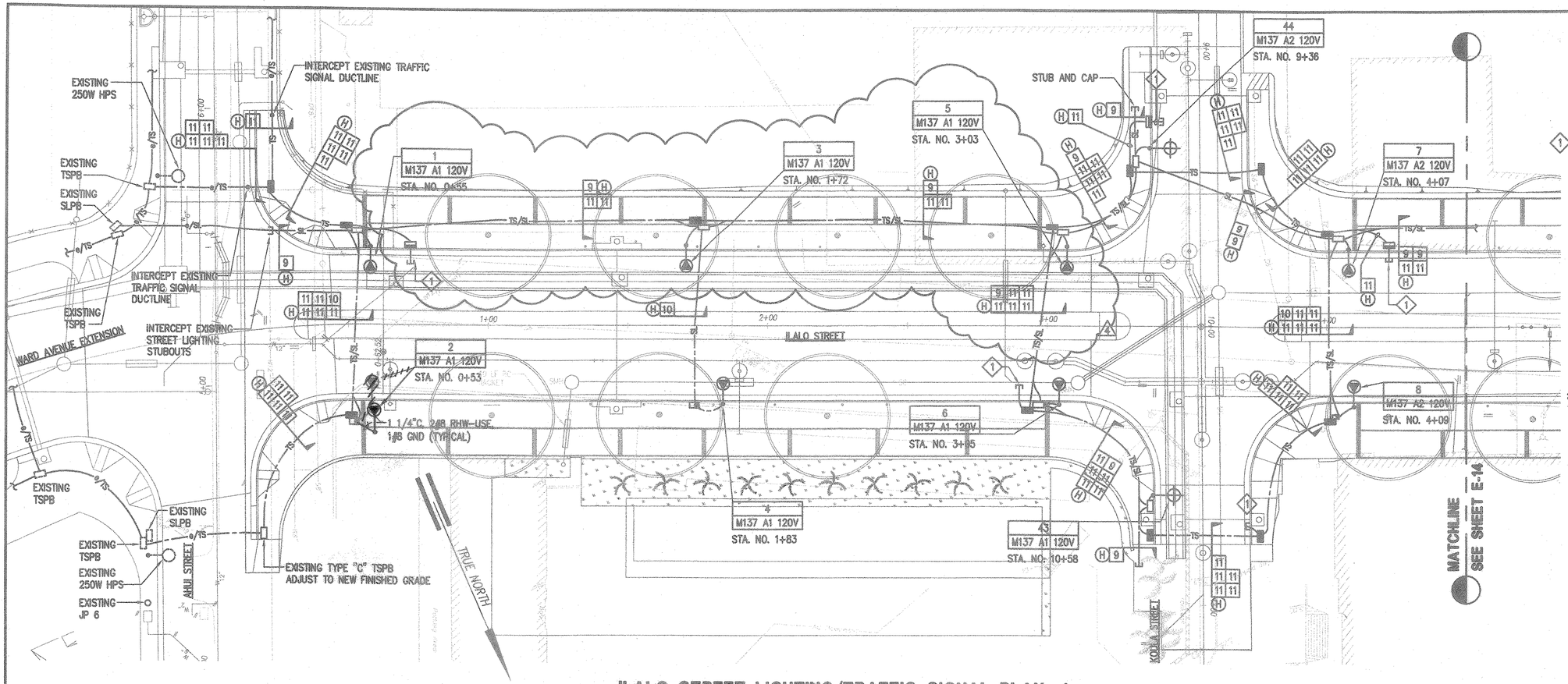

NOTE:

(1) 2" GALVANIZED RIGID STEEL CONDUIT STUBOUT FOR FUTURE LOOP DETECTOR WIRING.

APPROVED:

10/9/01
CHIEF, MECHANICAL/ELECTRICAL DESIGN AND ENGINEERING DIVISION DEPARTMENT OF DESIGN AND CONSTRUCTION CITY AND COUNTY OF HONOLULU (FOR STREET LIGHT WORK ONLY) — DATE

10/19/01
CHIEF, TRAFFIC SIGNAL AND TECHNOLOGY DIVISION DEPARTMENT OF TRANSPORTATION SERVICES CITY AND COUNTY OF HONOLULU (FOR TRAFFIC SIGNAL WORK ONLY) — DATE

11/15/01
CHIEF, TRAFFIC REVIEW BRANCH DEPARTMENT OF PLANNING AND PERMITTING CITY AND COUNTY OF HONOLULU — DATE

ILALO STREET LIGHTING/TRAFFIC SIGNAL PLAN -1

SCALE: 1" = 20'

GRAPHIC SCALE: 1"=20' — 20 0 20 40 — SCALE IN FEET

REVISION	DATE	DESCRIPTION	MADE BY	APPROVED
4	9/19/01	RELOCATE PULLBOXES TO CLEAR EDGE OF PLANTER STRIP	MA	

Planning – Engineering – Environmental Services – Photogrammetry – Surveying – Construction Management
R. M. TOWILL CORPORATION
808 842 1133 420 Waiakamilo Road Suite 411 Honolulu Hawaii 96817-4941

VINCENT K. MIYAGAWA LICENSED PROFESSIONAL ENGINEER No. 4534-E HAWAII, U.S.A.

THIS WORK WAS PREPARED BY ME OR UNDER MY SUPERVISION.
ECS, INC.
By
Its PROJECT ENGINEER
Date JULY 21, 2000

HAWAII COMMUNITY DEVELOPMENT AUTHORITY
STATE OF HAWAII
HONOLULU, HAWAII
KAKA'AKO COMMUNITY DEVELOPMENT DISTRICT
IMPROVEMENT DISTRICT 9
ILALO STREET IMPROVEMENTS
ILALO STREET LIGHTING/TRAFFIC SIGNAL PLAN - 1

ENGINEER: MA CHECKED BY: VM
DRAFTSMAN: RD DATE: 1/5/01

EXECUTIVE DIRECTOR, HAWAII COMMUNITY DEVELOPMENT AUTHORITY

FILE	POCKET	FOLDER	NO.

FILENAME: 60-3252

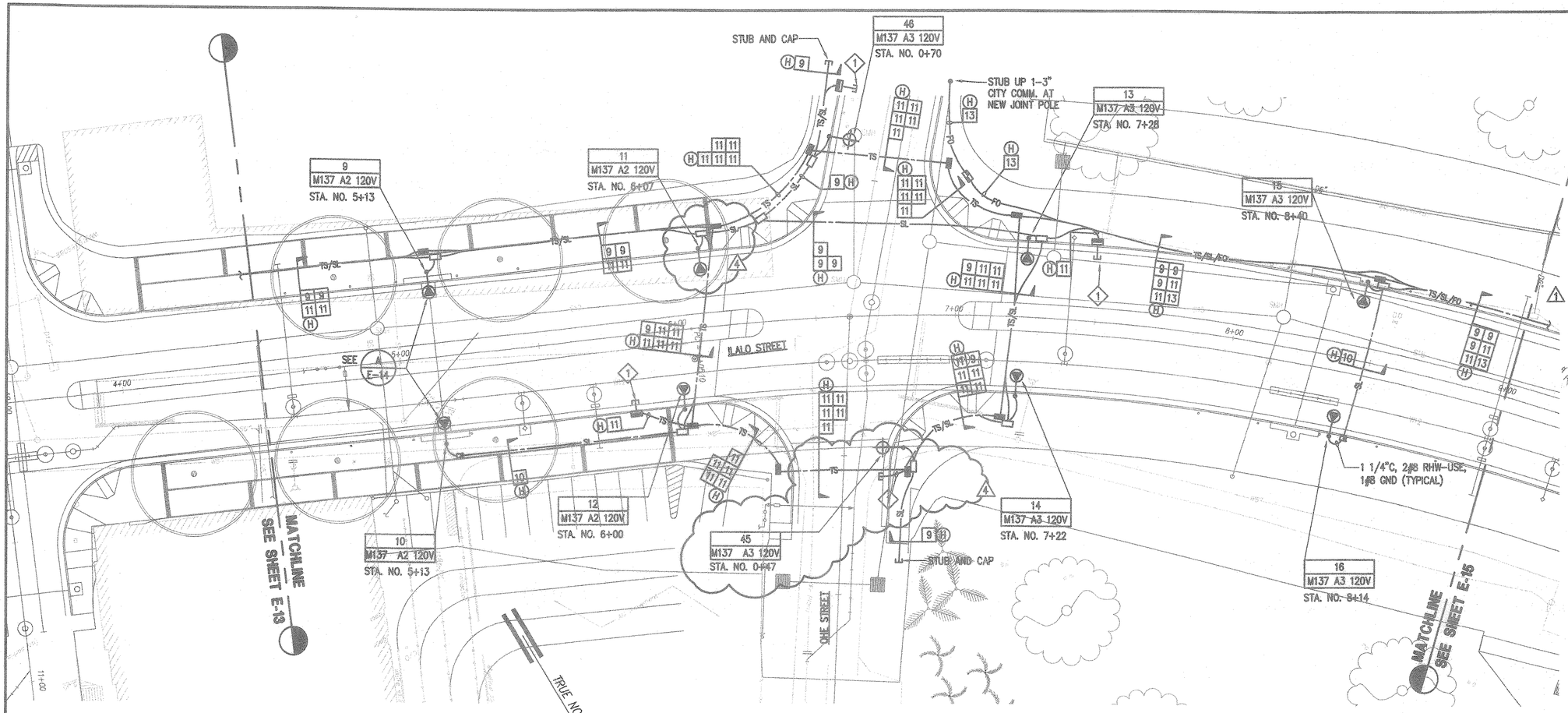

ILALO STREET LIGHTING/TRAFFIC SIGNAL PLAN - 2

SCALE: 1" = 20'

NOTE:

1. 2" GALVANIZED RIGID STEEL CONDUIT STUBOUT FOR FUTURE LOOP DETECTOR WIRING.

APPROVED:

10/9/01
CHIEF, MECHANICAL/ELECTRICAL DESIGN AND ENGINEERING DIVISION DEPARTMENT OF DESIGN AND CONSTRUCTION CITY AND COUNTY OF HONOLULU (FOR STREET LIGHT WORK AND CITY COMMUNICATIONS) — DATE

10/19/01
CHIEF, TRAFFIC SIGNAL AND TECHNOLOGY DIVISION DEPARTMENT OF TRANSPORTATION SERVICES CITY AND COUNTY OF HONOLULU (FOR TRAFFIC SIGNAL WORK ONLY) — DATE

4/15/01
CHIEF, TRAFFIC REVIEW BRANCH DEPARTMENT OF PLANNING AND PERMITTING CITY AND COUNTY OF HONOLULU — DATE

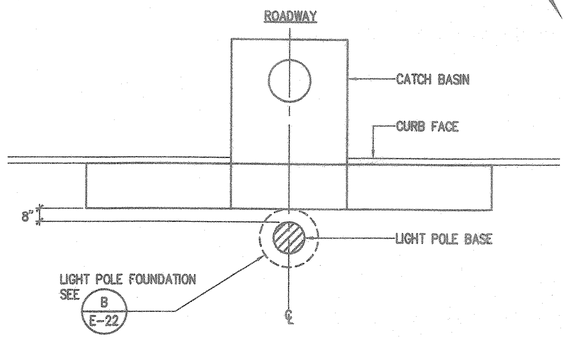

A E-14 LIGHT POLE NO. ID PLACEMENT DETAIL (LIGHT POLE NO.9 SIMILAR)

NOT TO SCALE

GRAPHIC SCALE:
1"=20' — 20 0 20 40
SCALE IN FEET

REVISION	DATE	DESCRIPTION	MADE BY	APPROVED
4	9/19/01	RELOCATE PULLBOXES TO CLEAR EDGE OF PLANTER STRIP	MA	
1	1/8/01	NEW SHEET, REPLACES SHEET E-14	MA	

Planning – Engineering – Environmental Services – Photogrammetry – Surveying – Construction Management
R. M. TOWILL CORPORATION
808 842 1133 420 Waiakamilo Road Suite 411 Honolulu Hawaii 96817-4941

VINCENT K. MIYAGAWA — LICENSED PROFESSIONAL ENGINEER — No. 4534-E — HAWAII, U.S.A.

THIS WORK WAS PREPARED BY ME OR UNDER MY SUPERVISION.
ECS, INC.
By
Its PROJECT ENGINEER
Date JULY 21, 2000

HAWAII COMMUNITY DEVELOPMENT AUTHORITY
STATE OF HAWAII
HONOLULU, HAWAII
KAKA'AKO COMMUNITY DEVELOPMENT DISTRICT
IMPROVEMENT DISTRICT 9
ILALO STREET IMPROVEMENTS
ILALO STREET LIGHTING/TRAFFIC SIGNAL PLAN - 2

ENGINEER: MA — CHECKED BY: VM
DRAFTSMAN: RD — DATE: 1/5/01

EXECUTIVE DIRECTOR, HAWAII COMMUNITY DEVELOPMENT AUTHORITY

FILENAME: 60-3253

FILE	POCKET	FOLDER	NO.

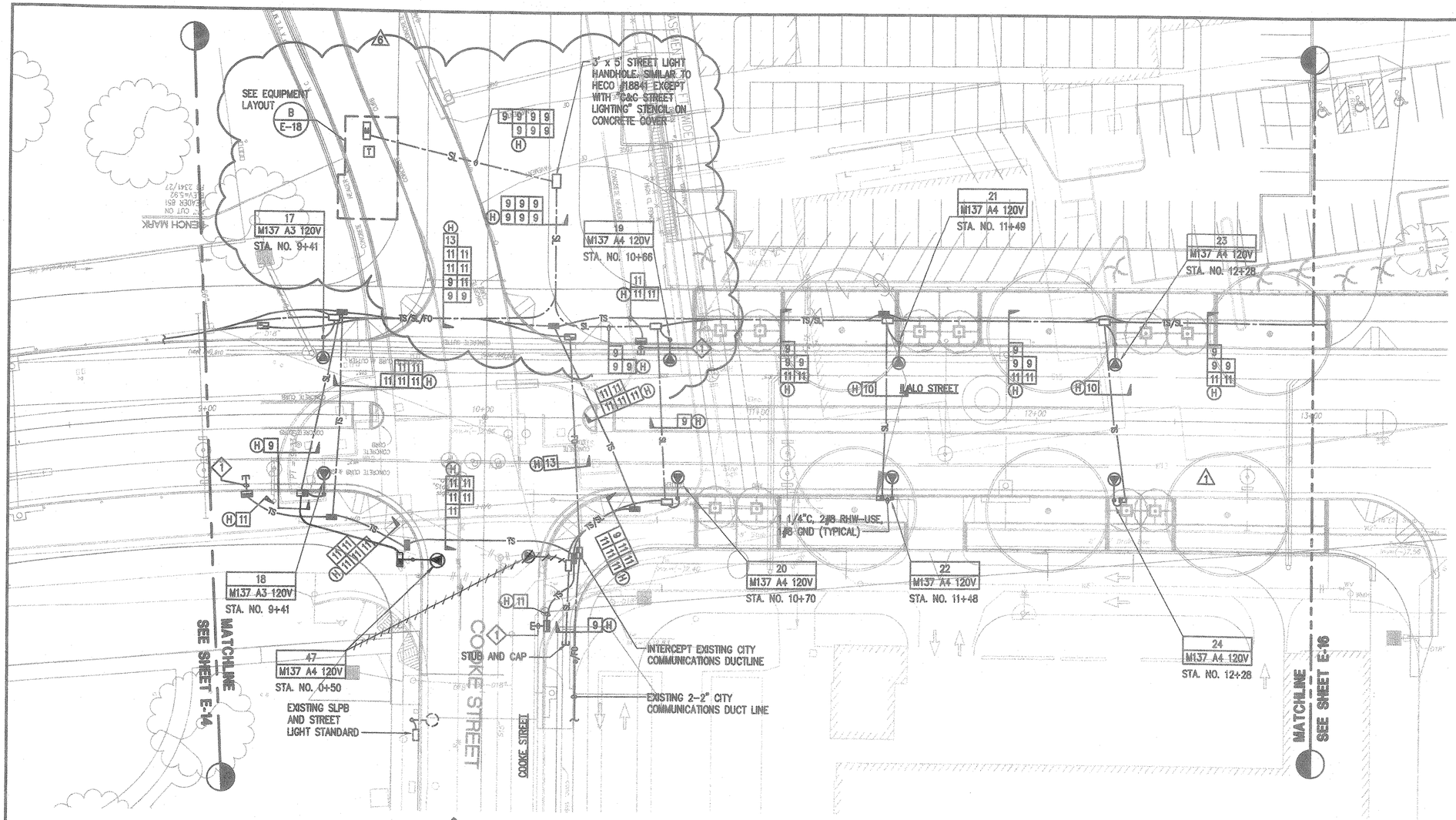

ILALO STREET LIGHTING/TRAFFIC SIGNAL PLAN - 3

SCALE: 1" = 20'

NOTE:

1. 2" GALVANIZED RIGID STEEL CONDUIT STUBOUT FOR FUTURE LOOP DETECTOR WIRING.

APPROVED:

6/12/02
CHIEF, MECHANICAL/ELECTRICAL — DATE
DESIGN AND ENGINEERING DIVISION
DEPARTMENT OF DESIGN AND CONSTRUCTION
CITY AND COUNTY OF HONOLULU
(FOR STREET LIGHT WORK AND CITY COMMUNICATIONS)

6/26/02
CHIEF, TRAFFIC SIGNAL AND TECHNOLOGY DIVISION — DATE
DEPARTMENT OF TRANSPORTATION SERVICES
CITY AND COUNTY OF HONOLULU
(FOR TRAFFIC SIGNAL WORK ONLY)

7/5/02
CHIEF, TRAFFIC REVIEW BRANCH — DATE
DEPARTMENT OF PLANNING AND PERMITTING
CITY AND COUNTY OF HONOLULU

GRAPHIC SCALE:
1"=20' 20 0 20 40
SCALE IN FEET

REVISION	DATE	DESCRIPTION	MADE BY	APPROVED
2	4/5/02	RELOCATED EQUIPMENT PAD	MA	
1	1/9/01	NEW SHEET, REPLACES SHEET E-15	MA	

Planning – Engineering – Environmental Services – Photogrammetry – Surveying – Construction Management
R. M. TOWILL CORPORATION
808 842 1133 420 Waiakamilo Road Suite 411 Honolulu Hawaii 96817-4941

VINCENT K. MIYAGAWA LICENSED PROFESSIONAL ENGINEER No. 4634-E HAWAII, U.S.A.

THIS WORK WAS PREPARED BY ME OR UNDER MY SUPERVISION.
ECS, INC.
By
Its PROJECT ENGINEER
Date JULY 21, 2000

HAWAII COMMUNITY DEVELOPMENT AUTHORITY
STATE OF HAWAII
HONOLULU, HAWAII

KAKA'AKO COMMUNITY DEVELOPMENT DISTRICT
IMPROVEMENT DISTRICT 9
ILALO STREET IMPROVEMENTS
ILALO STREET LIGHTING/TRAFFIC SIGNAL PLAN - 3

ENGINEER: MA CHECKED BY: VM
DRAFTSMAN: RD DATE: 1/5/01

EXECUTIVE DIRECTOR, HAWAII COMMUNITY DEVELOPMENT AUTHORITY

5/21/02-14:18 Y:\060\e60-32\60-32SL4.dwg

"RECORD DRAWINGS" E-15 SHEET 91 OF 140 SHEETS

FILE	POCKET	FOLDER	NO.

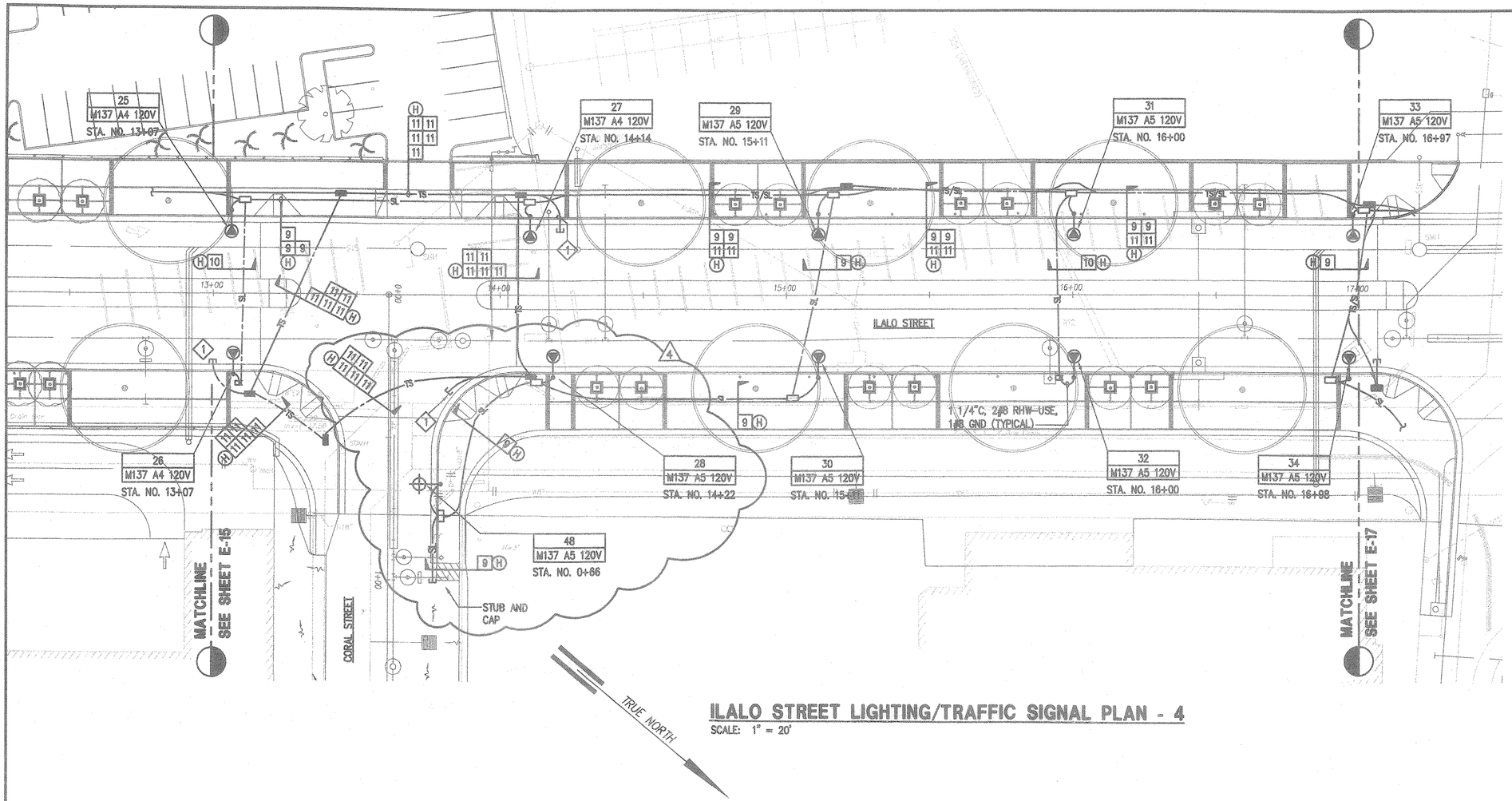

ILALO STREET LIGHTING/TRAFFIC SIGNAL PLAN - 4

SCALE: 1" = 20'

NOTE:

1. 2" GALVANIZED RIGID STEEL CONDUIT STUBOUT FOR FUTURE LOOP DETECTOR WIRING.

APPROVED:

10/9/01
CHIEF, MECHANICAL/ELECTRICAL — DATE
DESIGN AND ENGINEERING DIVISION
DEPARTMENT OF DESIGN AND CONSTRUCTION
CITY AND COUNTY OF HONOLULU
(FOR STREET LIGHT WORK ONLY)

10/18/01
CHIEF, TRAFFIC SIGNAL AND — DATE
TECHNOLOGY DIVISION
DEPARTMENT OF TRANSPORTATION SERVICES
CITY AND COUNTY OF HONOLULU
(FOR TRAFFIC SIGNAL WORK ONLY)

11/15/01
CHIEF, TRAFFIC REVIEW BRANCH — DATE
DEPARTMENT OF PLANNING AND PERMITTING
CITY AND COUNTY OF HONOLULU

GRAPHIC SCALE:
1"=20' 20 0 20 40
SCALE IN FEET

REVISION	DATE	DESCRIPTION	MADE BY	APPROVED
4	9/19/01	RELOCATE PULLBOXES TO CLEAR NEW HTCO PULLBOX	MA	

Planning – Engineering – Environmental Services – Photogrammetry – Surveying – Construction Management
R. M. TOWILL CORPORATION
808 842 1133 420 Waiakamilo Road Suite 411 Honolulu Hawaii 96817-4941

VINCENT K. MIYAGAWA LICENSED PROFESSIONAL ENGINEER No. 4634-E HAWAII, U.S.A.

THIS WORK WAS PREPARED BY ME OR UNDER MY SUPERVISION.
ECS, INC.
By: [signature]
Its PROJECT ENGINEER
Date JULY 21, 2000

HAWAII COMMUNITY DEVELOPMENT AUTHORITY
STATE OF HAWAII
HONOLULU, HAWAII
KAKA'AKO COMMUNITY DEVELOPMENT DISTRICT
IMPROVEMENT DISTRICT 9
ILALO STREET IMPROVEMENTS
ILALO STREET LIGHTING/TRAFFIC SIGNAL PLAN - 4

ENGINEER: MA — CHECKED BY: VM
DRAFTSMAN: RD — DATE: 1/5/01

EXECUTIVE DIRECTOR, HAWAII COMMUNITY DEVELOPMENT AUTHORITY

FILE	POCKET	FOLDER	NO.

FILENAME: 60-32S5

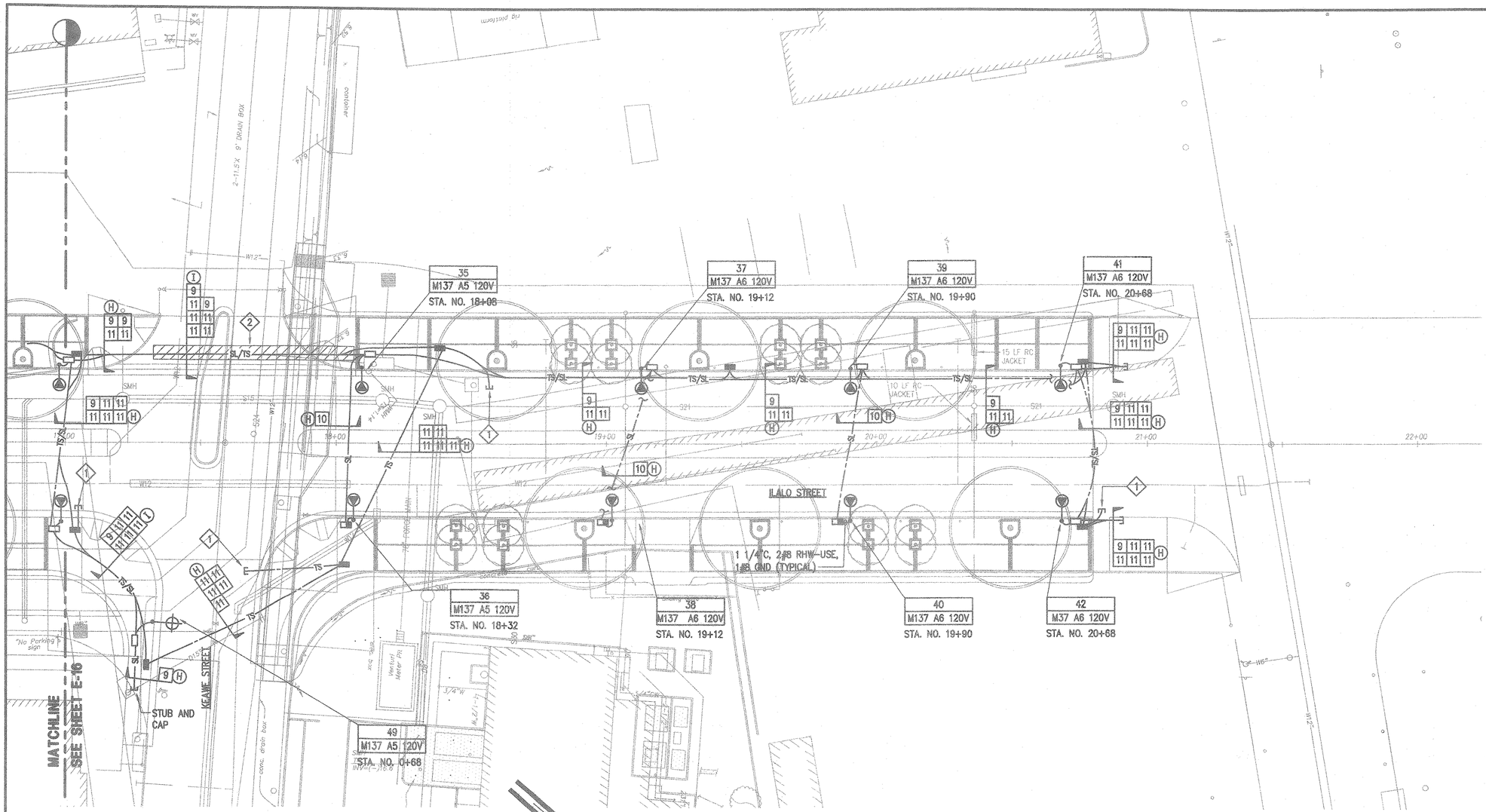

ILALO STREET LIGHTING/TRAFFIC SIGNAL PLAN - 5

SCALE: 1" = 20'

NOTES:

1. 2" GALVANIZED RIGID STEEL CONDUIT STUBOUT FOR FUTURE LOOP DETECTOR WIRING.
2. REINFORCED CONCRETE ENCASED DUCTLINE, 25 FEET PAST EITHER END OF BOX DRAIN. SEE DUCT TYPE "I", SHEET E-28.

APPROVED:

8/1/00
CHIEF, MECHANICAL/ELECTRICAL DESIGN AND ENGINEERING DIVISION DEPARTMENT OF DESIGN AND CONSTRUCTION CITY AND COUNTY OF HONOLULU (FOR STREET LIGHT WORK ONLY) — DATE

8/2/00
CHIEF, TRAFFIC SIGNAL AND TECHNOLOGY DIVISION DEPARTMENT OF TRANSPORTATION SERVICES CITY AND COUNTY OF HONOLULU (FOR TRAFFIC SIGNAL WORK ONLY) — DATE

8/3/00
CHIEF, TRAFFIC REVIEW BRANCH DEPARTMENT OF PLANNING AND PERMITTING CITY AND COUNTY OF HONOLULU — DATE

GRAPHIC SCALE:
1"=20'
20 0 20 40
SCALE IN FEET

REVISION	DATE	DESCRIPTION	MADE BY	APPROVED

Planning - Engineering - Environmental Services - Photogrammetry - Surveying - Construction Management
R. M. TOWILL CORPORATION
808 842 1133 420 Waiakamilo Road Suite 411 Honolulu Hawaii 96817-4941

VINCENT K. MIYAGAWA
LICENSED PROFESSIONAL ENGINEER
No. 4534-E
HAWAII, U.S.A.

THIS WORK WAS PREPARED BY ME OR UNDER MY SUPERVISION.
ECS, INC.
By
Its PROJECT ENGINEER
Date JULY 21, 2000

HAWAII COMMUNITY DEVELOPMENT AUTHORITY
STATE OF HAWAII
HONOLULU, HAWAII
KAKA'AKO COMMUNITY DEVELOPMENT DISTRICT
IMPROVEMENT DISTRICT 9
ILALO STREET IMPROVEMENTS
ILALO STREET LIGHTING/TRAFFIC SIGNAL PLAN - 5

ENGINEER: MA
DRAFTSMAN: RD
CHECKED BY: VM
DATE: JULY 21, 2000

EXECUTIVE DIRECTOR, HAWAII COMMUNITY DEVELOPMENT AUTHORITY

FILENAME: 60-3256

FILE	POCKET	FOLDER	NO.

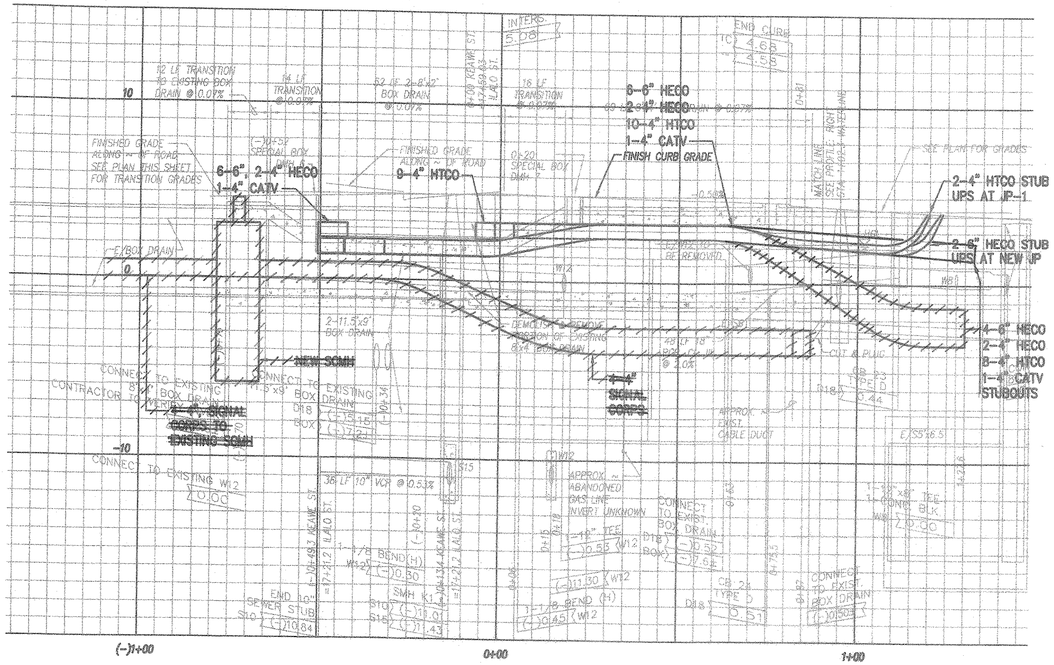

A E-18 **PROFILE - KEAWE STREET**

STA. (-) 1+00 TO STA. 1+68.5

SCALE: HORIZ. 1" = 20'
VERT. 1" = 4'

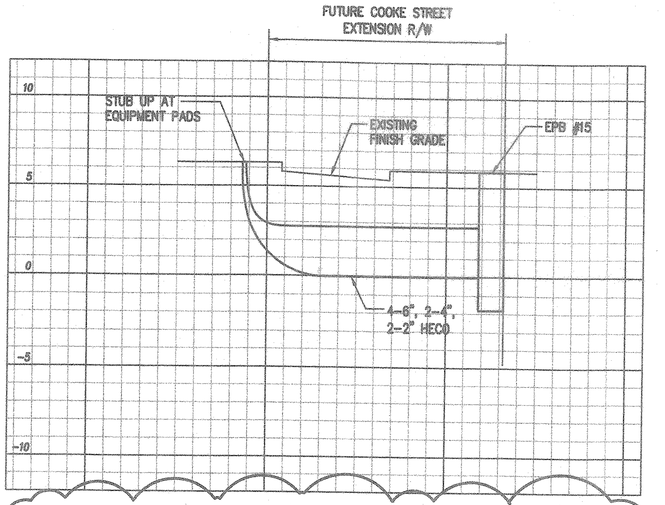

6 C E-18 **PROFILE - STATION (-) 0.75 COOKE STREET**

SCALE: HORIZ. 1" = 20'
VERT. 1" = 4'

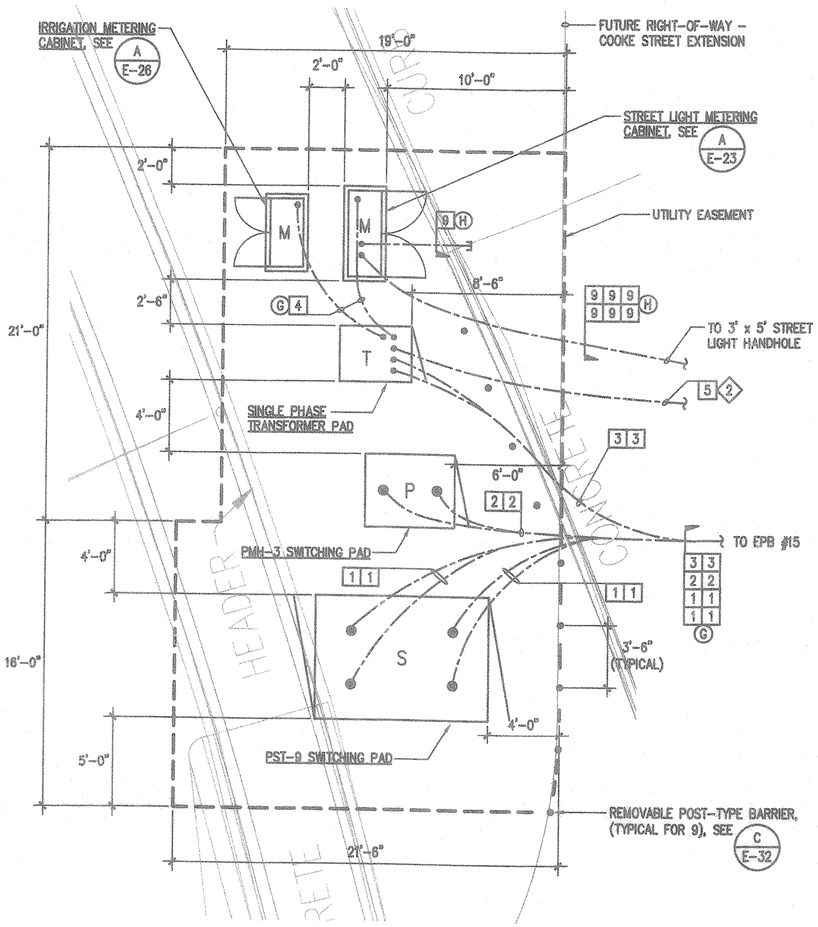

NOTES:

1. 3/4"C, 2#12, 1#12 GND.
2. 1½"C, 2#8 TO RELOCATED DRIVEWAY LIGHT SEE SHEET E-10.

6 B E-18 **EQUIPMENT LAYOUT PLAN**

SCALE: 1/4" = 1'-0"

4

GRAPHIC SCALE:

1"=20' 20 0 20 40

1"=4' 4 0 4 8

SCALE IN FEET

DRAWING REVIEW

Reviewed for HECO's Facilities Only

Date 5/24/02 By

Engineering Department
Hawaiian Electric Company, Inc.

HECO's review of these drawings shall in no way relieve the Customer, its Consultant, its Contractor or anyone acting on the Customer's behalf from the responsibility for engineering, design, materials and any other liability associated with this project.

APPROVED:

HAWAIIAN ELECTRIC COMPANY, INC — DATE

GTE HAWAIIAN TEL — 5-31-02 DATE

OCEANIC CABLEVISION — 06-05-02 DATE

CHIEF, MECHANICAL/ELECTRICAL DESIGN AND ENGINEERING DIVISION CITY AND COUNTY OF HONOLULU (FOR STREET LIGHT AND CITY COMMUNICATIONS WORK) — 6/12/02 DATE

CHIEF, TRAFFIC SIGNAL AND TECHNOLOGY DIVISION DEPARTMENT OF TRANSPORTATION SERVICES CITY AND COUNTY OF HONOLULU (FOR TRAFFIC SIGNAL WORK ONLY) — 6/26/02 DATE

CHIEF, TRAFFIC REVIEW BRANCH DEPARTMENT OF PLANNING AND PERMITTING CITY AND COUNTY OF HONOLULU — 7/15/02 DATE

REVISION	DATE	DESCRIPTION	MADE BY	APPROVED
6	4/5/02	RELOCATED EQUIPMENT PAD, ADDED PROFILE	MA	
4	9/19/01	ELIMINATED SLPB	MA	

Planning – Engineering – Environmental Services – Photogrammetry – Surveying – Construction Management
R. M. TOWILL CORPORATION
808 842 1133 420 Waiakamilo Road Suite 411 Honolulu Hawaii 96817-4941

VINCENT K. MIYAGAWA LICENSED PROFESSIONAL ENGINEER No. 4634-E HAWAII, U.S.A.

THIS WORK WAS PREPARED BY ME OR UNDER MY SUPERVISION.

ECS, INC.

By

Its PROJECT ENGINEER

Date JULY 21, 2000

HAWAII COMMUNITY DEVELOPMENT AUTHORITY
STATE OF HAWAII
HONOLULU, HAWAII

KAKA'AKO COMMUNITY DEVELOPMENT DISTRICT
IMPROVEMENT DISTRICT 9

ILALO STREET IMPROVEMENTS

EQUIPMENT LAYOUT PLAN

ENGINEER: MA CHECKED BY: VM
DRAFTSMAN: MO DATE: 1/5/01

EXECUTIVE DIRECTOR, HAWAII COMMUNITY DEVELOPMENT AUTHORITY

5/21/02-13:48 Y:\060\e60-32\60-32S10.dwg

"RECORD DRAWINGS" E-18 SHEET 94 OF 140 SHEETS

FILE	POCKET	FOLDER	NO.

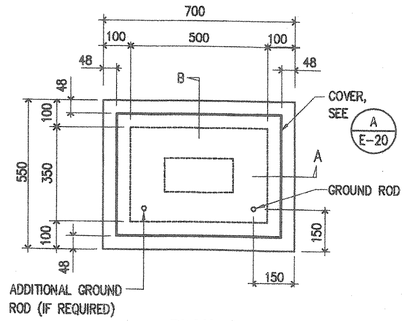

PLAN

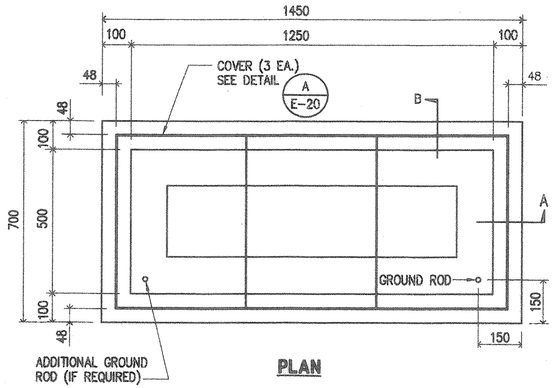

PLAN

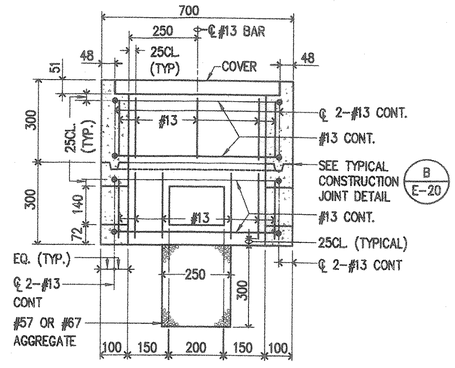

SECTION A-A

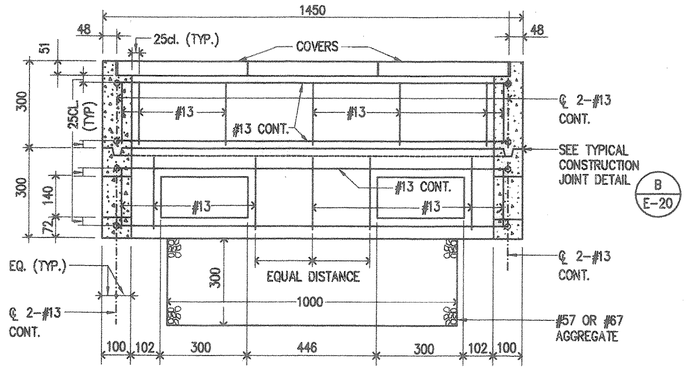

SECTION A-A

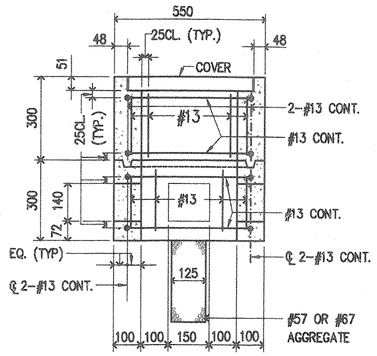

SECTION B-B

TYPE "A" PULLBOX

NO SCALE

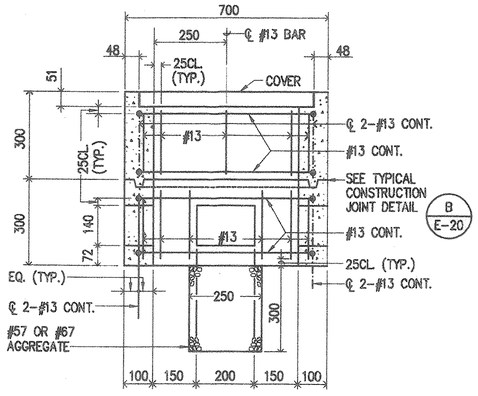

SECTION B-B

TYPE "C" PULLBOX (OLD TYPE "D")

NO SCALE

GENERAL PULLBOX NOTES:

1. PROVIDE A MINIMUM OF ONE 16ø x 3.0M COPPERCLAD GROUND ROD IN EACH PULLBOX. WHEN DIRECTED BY THE TRAFFIC SIGNAL INSPECTOR/ENGINEER, INSTALL ADDITIONAL GROUND RODS. COST OF GROUND RODS SHALL BE INCIDENTAL TO THE PULLBOXES.
2. ALL PRE-CAST CONCRETE PULLBOXES SHALL BE MANUFACTURED IN TWO PIECES.
3. THE PULLBOX WITH COVER SHALL BE CAPABLE OF SUPPORTING AN MS 18 LOADING.
4. THE MAXIMUM WEIGHT OF THE PULLBOX COVER SHALL NOT EXCEED 27 KILOGRAMS.
5. THE OPENINGS FOR THE CONDUITS ON ALL PULLBOXES SHALL BE PRE-CAST CONCRETE KNOCKOUTS.
6. AFTER INSTALLING THE CONDUITS IN THE OPENINGS OF THE PULLBOXES, THE CONTRACTOR SHALL FILL THE EXCESS OPENING IN THE PRE-CAST KNOCKOUTS WITH CONCRETE MORTAR.
7. PRIOR TO INSTALLING THE PULLBOXES, THE CONTRACTOR SHALL LEVEL THE BOTTOM OF THE TRENCH AND ACHIEVE A MINIMUM OF 95% RELATIVE COMPACTION OF THE BOTTOM OF THE TRENCH.
8. ALL CONCRETE SHALL BE CLASS A (25MPA, MIN.)
9. REBARS SHALL BE GRADE 300 AND ALL LAPPED SPLICES SHALL BE 360mm MINIMUM.
10. THE #57 OR #67 SIZE AGGREGATE SHALL CONFORM TO LATEST VERSION OF AASHTO M43 (ASTM D 448).
11. TYPE "C" PULLBOX SHALL BE INSTALLED IN A LOCATION PROTECTED FROM VEHICULAR TRAFFIC (I.E. RAISED SIDEWALKS, BEHIND A.C. CURBS, TRAFFIC SIGNAL STANDARDS OR PIPE GUARDS).

NOTE:

1. ALL DIMENSIONS ARE IN MILLIMETERS UNLESS OTHERWISE SHOWN.

APPROVED:

8/11/00
CHIEF, MECHANICAL/ELECTRICAL DESIGN AND ENGINEERING DIVISION DEPARTMENT OF DESIGN AND CONSTRUCTION CITY AND COUNTY OF HONOLULU (FOR STREET LIGHT WORK ONLY)
DATE

8/2/00
CHIEF, TRAFFIC SIGNAL AND TECHNOLOGY DIVISION DEPARTMENT OF TRANSPORTATION SERVICES CITY AND COUNTY OF HONOLULU (FOR TRAFFIC SIGNAL WORK ONLY)
DATE

8/8/00
CHIEF, TRAFFIC REVIEW BRANCH
DEPARTMENT OF PLANNING AND PERMITTING CITY AND COUNTY OF HONOLULU
DATE

VINCENT K. MIYAGAWA LICENSED PROFESSIONAL ENGINEER No. 4534-E HAWAII, U.S.A.

THIS WORK WAS PREPARED BY ME OR UNDER MY SUPERVISION.
ECS, INC.
By
Its PROJECT ENGINEER
Date JULY 21, 2000

REVISION	DATE	DESCRIPTION	MADE BY	APPROVED

Planning - Engineering - Environmental Services - Photogrammetry - Surveying - Construction Management
R. M. TOWILL CORPORATION
808 842 1133 420 Waiakamilo Road Suite 411 Honolulu Hawaii 96817-4941

HAWAII COMMUNITY DEVELOPMENT AUTHORITY
STATE OF HAWAII
HONOLULU, HAWAII
KAKA'AKO COMMUNITY DEVELOPMENT DISTRICT
IMPROVEMENT DISTRICT 9
ILALO STREET IMPROVEMENTS
TYPE "A" AND "C" PULLBOX DETAILS

ENGINEER: MA CHECKED BY: VM
DRAFTSMAN: CM DATE: JULY 21, 2000
EXECUTIVE DIRECTOR, HAWAII COMMUNITY DEVELOPMENT AUTHORITY

FILE	POCKET	FOLDER	NO.

FILENAME: 60-32B9

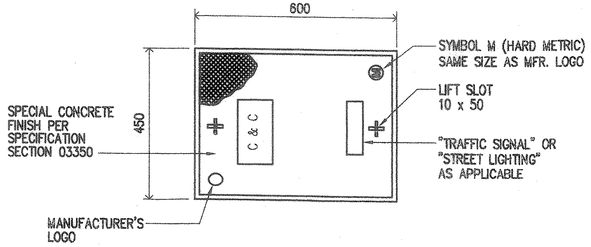

PLAN VIEW

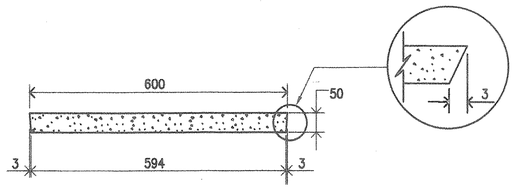

ELEVATION

A / E-20 CONCRETE COVER

NOT TO SCALE

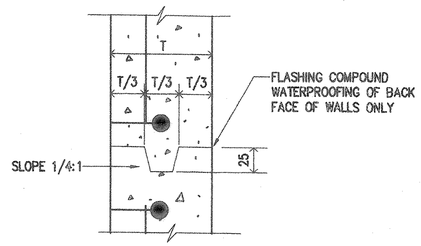

B / E-20 TYPICAL CONSTRUCTION JOINT DETAIL

NOT TO SCALE

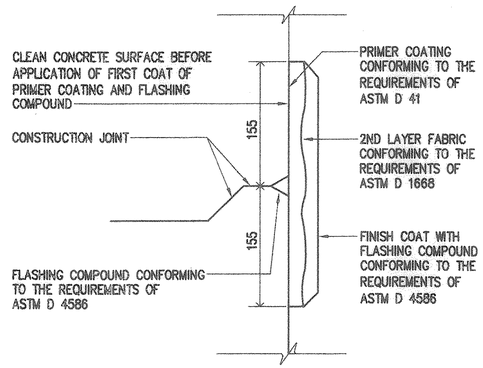

C / E-20 TYPICAL FLASHING COMPOUND WATERPROOFING DETAILS

NOT TO SCALE

NOTE:

1. ALL DIMENSIONS ARE IN MILLIMETERS UNLESS OTHERWISE SHOWN.

APPROVED:

8/11/00
CHIEF, MECHANICAL/ELECTRICAL DESIGN AND ENGINEERING DIVISION
DEPARTMENT OF DESIGN AND CONSTRUCTION
CITY AND COUNTY OF HONOLULU
(FOR STREET LIGHT WORK ONLY)
DATE

8/3/00
CHIEF, TRAFFIC SIGNAL AND TECHNOLOGY DIVISION
DEPARTMENT OF TRANSPORTATION SERVICES
CITY AND COUNTY OF HONOLULU
(FOR TRAFFIC SIGNAL WORK ONLY)
DATE

8/2/00
CHIEF, TRAFFIC REVIEW BRANCH
DEPARTMENT OF PLANNING AND PERMITTING
CITY AND COUNTY OF HONOLULU
DATE

VINCENT K. MIYAGAWA
LICENSED PROFESSIONAL ENGINEER
No. 4634-E
HAWAII, U.S.A.

THIS WORK WAS PREPARED BY ME OR UNDER MY SUPERVISION.
ECS, INC.
By Vincent Miyagawa
Its PROJECT ENGINEER
Date JULY 21, 2000

REVISION	DATE	DESCRIPTION	MADE BY	APPROVED

Planning – Engineering – Environmental Services – Photogrammetry – Surveying – Construction Management
R. M. TOWILL CORPORATION
808 842 1133 420 Waiakamilo Road Suite 411 Honolulu Hawaii 96817-4941

HAWAII COMMUNITY DEVELOPMENT AUTHORITY
STATE OF HAWAII
HONOLULU, HAWAII

KAKA'AKO COMMUNITY DEVELOPMENT DISTRICT
IMPROVEMENT DISTRICT 9
ILALO STREET IMPROVEMENTS
TYPE "A" AND "C" PULLBOX DETAILS

ENGINEER: MA
DRAFTSMAN: CM
CHECKED BY: VM
DATE: JULY 21, 2000

EXECUTIVE DIRECTOR, HAWAII COMMUNITY DEVELOPMENT AUTHORITY

FILENAME: 60-32B3

FILE	POCKET	FOLDER	NO.

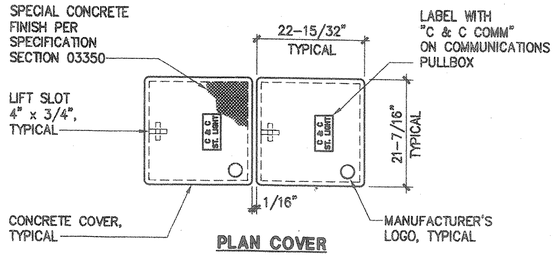

PLAN COVER

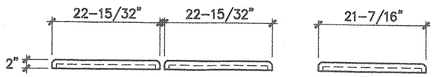

ELEVATION

SIDE VIEW

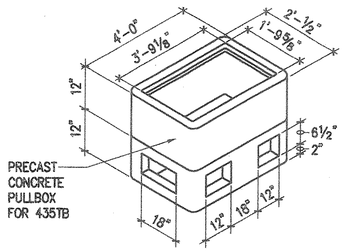

PULLBOX

NOTES:

1. PROVIDE CONCRETE COVER.
2. INSTALL ON 6" BED OF #3 CRUSHED ROCK.
3. PROVIDE SUFFICIENT AMOUNT OF 5/8"ø X 10' COPPERCLAD GROUND RODS AS DIRECTED BY THE STREET LIGHT/CITY COMMUNICATIONS INSPECTOR/ENGINEER. COST SHALL BE INCIDENTAL TO THE VARIOUS ITEMS.

A E-21 SLD-4 PULLBOX

NOT TO SCALE

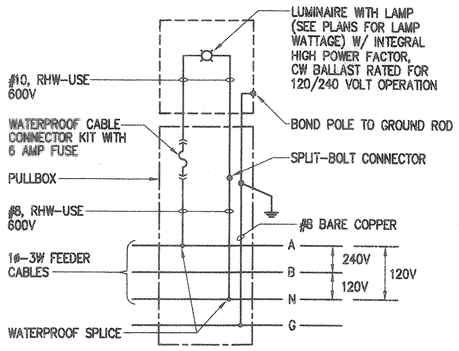

NOTE:

PHOTOCELL LOCATED AT STREET LIGHT METER ENCLOSURE.

B E-21 TYPICAL CONNECTION DIAGRAM FOR ONE LIGHT

NOT TO SCALE

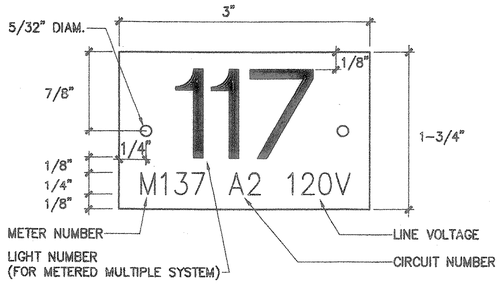

NOTES:

1. USE 2 PLY LAMINATED FLEXIBLE PLASTIC BLACK-WHITE. THICKNESS: BLACK CAP SHEET-0.010", WHITE BASE SHEET-0.052".
2. NUMBER SIZE SHALL BE 1" HIGH AND ENGRAVED 1/8" WIDE, WHITE IN COLOR (NUMBER AS REQUIRED).
3. NOMENCLATURE SIZE SHALL BE 1/4" HIGH AND ENGRAVED 1/32" WIDE, WHITE IN COLOR (METER NUMBER, CIRCUIT NUMBER AND VOLTAGE AS REQUIRED).
4. ATTACH TO CONCRETE POLE WITH 1/8" DIAMETER STAINLESS STEEL SCREWS WITH EXPANSION SHIELD.
5. NUMBERS ARE INSCRIBED BY CUTTING THROUGH "BLACK CAP SHEET" TO EXPOSE "WHITE LETTERS".
6. ASSIGN CIRCUIT NUMBER FOR SYSTEMS WITH TWO OR MORE CIRCUITS (LETTER INDICATES PANEL BOARD, NUMBER INDICATES CIRCUIT).

C E-21 STREET LIGHT I.D. TAG DETAIL METERED SYSTEM

NOT TO SCALE

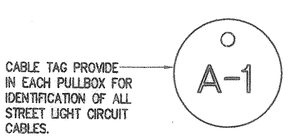

NOTES:

1. NUMBER SIZE SHALL BE 3/8" HIGH AND PUNCHED ON BRASS TAG.
2. ATTACH TO CIRCUIT CABLES WITH NYLON WEATHER RESISTANT LOCKING CABLE TIES, 3/16" WIDE.

D E-21 STREET LIGHT CIRCUIT CABLE I.D. TAG DETAIL

NOT TO SCALE

GENERAL STREET LIGHTING NOTES:

1. PRIMARY SERVICE CABLES AND CONNECTION TO STREET LIGHT TRANSFORMER TERMINALS SHALL BE PROVIDED BY HECo. (METERED MULTIPLE SYSTEM). METER NO. M-137.
2. CONTRACTOR SHALL BE RESPONSIBLE FOR COORDINATING AND INFORMING HECo THAT STREET LIGHT TRANSFORMER IS READY FOR ENERGIZATION PRIOR TO INSTALLATION OF HECo CABLES AND CONNECTION BY HECo.
3. CONTRACTOR SHALL NOTIFY AND COORDINATE WORK WITH THE MECHANICAL/ ELECTRICAL DESIGN AND ENGINEERING DIVISION, DEPARTMENT OF DESIGN AND CONSTRUCTION, CITY & COUNTY OF HONOLULU, 72 HOURS IN ADVANCE OF STREET LIGHT SYSTEM (PAUL KAWAMURA, PHONE No. 527-5002).
4. ALL LUMINAIRES SHALL BE HIGH PRESSURE SODIUM TYPE WITH WATTAGE AND IES TYPE LIGHT DISTRIBUTION AS INDICATED.
5. SEE THIS SHEET FOR TYPICAL CONSTRUCTION DETAILS. ALSO, REFER TO APPLICABLE STANDARD DETAILS OF THE MECHANICAL/ELECTRICAL DESIGN AND ENGINEERING DIVISION, DEPARTMENT OF DESIGN AND CONSTRUCTION, CITY & COUNTY OF HONOLULU.
6. CONTRACTOR SHALL STENCIL THE DATE OF INSTALLATION ON THE BOTTOM OF PHOTO CELL.
7. LUMINAIRE & POLE COUNT:

POLE	LUMINAIRES
30'-0" = 49	150W = 6
	250W = 43

8. CONTRACTOR SHALL MAINTAIN ONE SET OF APPROVED PLANS AT THE PROJECT SITE AT ALL TIMES DURING CONSTRUCTION WORK.
9. CONTRACTOR SHALL ARRANGE FOR HECo TO ENERGIZE STREET LIGHTS A MINIMUM OF SIX HOURS FOR FINAL INSPECTION & ACCEPTANCE. CONTRACTOR SHALL PAY FOR ALL TESTING COSTS.
10. FINAL ACCEPTANCE INSPECTION WILL BE UNDERTAKEN ONLY AFTER ALL WORK HAS BEEN COMPLETED & THE "AS-BUILT" TRACINGS HAVE BEEN SUBMITTED TO THE DEPARTMENT OF DESIGN AND CONSTRUCTION, CITY & COUNTY OF HONOLULU.
11. AFTER COMPLETION OF FINAL INSPECTION WITH THE ENGINEER AND THE DEPARTMENT OF DESIGN AND CONSTRUCTION, CONTRACTOR SHALL OBTAIN WRITTEN ACCEPTANCE OF STREET LIGHT SYSTEM FROM THE MECHANICAL/ELECTRICAL DESIGN AND ENGINEERING DIVISION, DEPARTMENT OF DESIGN AND CONSTRUCTION CITY & COUNTY OF HONOLULU.
12. THE CONTRACTOR SHALL MEASURE AND RECORD THE GROUND RESISTANCE AT EACH STANDARD WITH NO EXTERNAL GROUND WIRES CONNECTED TO THE GROUND ROD. CONTRACTOR SHALL SCHEDULE GROUND RESISTANCE MEASUREMENTS 48 HOURS IN ADVANCE AND SHALL NOT PROCEED WITH MEASUREMENTS UNTIL APPROVAL IS GRANTED. SCHEDULES ARE SUBJECT TO CHANGE DEPENDING UPON WEATHER CONDITIONS. REPORTS SHALL INCLUDE NAME OF PERSONNEL CONDUCTING THE TEST, METER TYPE AND SERIAL NUMBER, DATE OF TEST AND SOIL CONDITIONS. TEST RESULTS SHALL BE CERTIFIED BY THE CONTRACTOR AND SUBMITTED TO THE CITY.
13. CONTRACTOR SHALL NOT BACK FILL TRENCHES UNTIL APPROVAL IS GRANTED BY THE STREET LIGHT INSPECTOR.
14. ALL CONCRETE WORK SHALL BE SCHEDULED AT LEAST 24 HOURS IN ADVANCE. CONCRETE SHALL NOT BE POURED UNTIL APPROVAL IS GRANTED BY THE STREET LIGHT INSPECTOR.
15. SUBMIT SHOP DRAWINGS FOR ALL STREET LIGHT COMPONENTS INCLUDING PULLBOXES & EQUIPMENT CABINET, FOR APPROVAL.
16. EXISTING STREET LIGHTS SHALL BE KEPT OPERATIONAL UNTIL NEW STREET LIGHTS ARE OPERATIONAL.
17. NOTIFY CITY AND COUNTY STREET LIGHT INSPECTOR OF STREET LIGHT I.D. TAG NUMBER WHEN EXISTING STREET LIGHT IS REMOVED SO HECO BILLING CAN BE TERMINATED.
18. THE FOLLOWING CITY AND COUNTY STREET LIGHTS WILL BE REMOVED.

AREA NO.	POLE NO.	STREET LIGHT NO.
81	13	81
81	12	80
81	11	79
81	10	78
81	8	125
81	7	124
81	5	123
81	5	122
81	3	121
81	1	120
81	1X	115
81	2	73
81	4	74
81	11	131

APPROVED:

CHIEF, MECHANICAL/ELECTRICAL DESIGN AND ENGINEERING DIVISION DEPARTMENT OF DESIGN AND CONSTRUCTION CITY AND COUNTY OF HONOLULU — DATE 8/11/00

CHIEF, TRAFFIC REVIEW BRANCH DEPARTMENT OF PLANNING AND PERMITTING CITY AND COUNTY OF HONOLULU — DATE 8/9/00

VINCENT K. MIYAGAWA LICENSED PROFESSIONAL ENGINEER No. 4534-E HAWAII, U.S.A.

THIS WORK WAS PREPARED BY ME OR UNDER MY SUPERVISION.
ECS, INC.
By _____
Its PROJECT ENGINEER
Date JULY 21, 2000

REVISION	DATE	DESCRIPTION	MADE BY	APPROVED

Planning - Engineering - Environmental Services - Photogrammetry - Surveying - Construction Management
R. M. TOWILL CORPORATION
808 842 1133 420 Waiakamilo Road Suite 411 Honolulu Hawaii 96817-4941

HAWAII COMMUNITY DEVELOPMENT AUTHORITY
STATE OF HAWAII
HONOLULU, HAWAII
KAKA'AKO COMMUNITY DEVELOPMENT DISTRICT
IMPROVEMENT DISTRICT 9
ILALO STREET IMPROVEMENTS
STREET LIGHTING DETAILS

ENGINEER: MA — CHECKED BY: VM
DRAFTSMAN: CM — DATE: JULY 21, 2000
EXECUTIVE DIRECTOR, HAWAII COMMUNITY DEVELOPMENT AUTHORITY

FILE | POCKET | FOLDER | NO.

FILENAME: 60-32B1

FINISH:
BRACKET ARM AND LUMINAIRE SHALL BE PRETREATED WITH 100 MG PER SQUARE FOOT OF ZINC PHOSPHATE AND OVERCOATED WITH AN ELECTROSTATICALLY APPLIED 2 TO 4 MIL COAT OF TGIC (TRIGLYCIDLISOCYANURATE) POLYESTER POWDER PAINT CURED AT 425 DEGREES F. COLOR TO BE DETERMINED BY THE STATE.

1-1/2" INCH SCHEDULE 40 BRACKET ARM, PIPE THREADED 1-2/2" NPT FOR LUMINAIRE MOUNTING, ENTIRE ASSEMBLY SHALL BE HOT-DIPPED GALVANIZED AFTER FABRICATION. HOLOPHANE CATALOG NO. UHLBK-CS1A-A OR APPROVED EQUAL

30"

PHOTOCELL AT POLE 19 ONLY

16" NOM.

THRU-BOLT

250W OR 150W

30" NOM.

HIGH PRESSURE SODIUM LUMINAIRE, PRISMATIC GLASS OPTICAL ASSEMBLY SHIELDED BY A FLARED CUTOFF REFLECTOR WITH A TOP MOUNTED CAST ALUMINUM BALLAST HOUSING. LUMINAIRE SHALL BE FURNISHED WITH A HIGH INTENSITY DISCHARGE BALLAST AND VERTICAL SOCKET ASSEMBLY. HOLOPHANE CATALOG NO. VN15AHPMTA21 OR APPROVED EQUAL. CONTRACTOR SHALL ENSURE THE PROPER ORIENTATION OF THE LUMINAIRE TO THE SATISFACTION OF THE STREET LIGHT INSPECTOR.

I.D. TAG, SEE C/E-21

8'-0" TO TOP OF CONCRETE WALKWAY

29'-7"

30'-0" NOMINAL

CONCRETE POLE, 10-FLUTE, TAPERED SHAFT, PRESTRESSED WIRE STEEL WITH REINFORCING AND CENTRIFUGALLY CAST. FINISH SHALL BE BLACK AGGREGATE WITH GRAFFITI-RESISTANT COATING. AMERON CATALOG NO. VBF-09 (123) OR APPROVED EQUAL. SUITABLE TO WITHSTAND 100 MPH WINDS.

8" (TYPICAL) UNLESS NOTED

3" X 7" HANDHOLE

24"

11"

NEW CURB AND GUTTER

ROADWAY

17"

SEE BASE DETAIL B/E-22

A/E-22 DECORATIVE STREET LIGHT STANDARD
NOT TO SCALE

#8 B.C. GND WIRE TO GND LUG ACROSS HANDHOLE OPENING

HANDHOLE (WITH COVER REMOVED) FACING OPPOSITE OF ROADWAY. GREASE S.S. SCREWS FOR COVER.

2#10 AWG RHW-USE TO LUMINAIRE

SPLIT BOLT CONNECTOR. TAPE AFTER INSTALLATION

ADD 3 TIES AT TOP

2#8 RHW-USE

WRAP ASPHALTIC PAPER AROUND BASE OF CONCRETE POLE BEFORE GROUTING, TRIM EXCESS AT TOP TO BE FLUSH WITH FINISH GRADE

INSULATED END BUSHING. SEAL OPENING WITH "DUCT SEAL" AFTER INSTALLING CABLES.

FORM GROUT, FLUSH WITH FINISH GRADE AND ROUND EDGE 1/4" RADIUS ALL AROUND

FINISHED GRADE

WP, SPLIT BOLT CONNECTOR TAPE AFTER INSTALLATION

4" NOM. GROUT

4"

5"

2"

PULLBOX

AFTER POLE LEVEL AND PLUMB COAT ANCHOR BOLTS AND HEX NUTS, ABOVE AND BELOW BASE PLATE, WITH BITUMINOUS COATING AND ENCASE WITH 1/4" OF DUCT SEAL BEFORE GROUTING

WP, IN-LINE FUSE (6A) CONNECTOR KIT

BC GND WIRE

GALVANIZED ANCHOR BOLTS: (4) 1" x 36" WITH LEVELING NUTS AND WASHERS (2 PER ANCHOR BOLT)

10'-0"

5/8" DIA. x 10'-0" COPPERCLAD GROUND ROD. PROVIDE ADDITIONAL GND ROD IF RESISTANCE EXCEEDS 25 OHMS.

PVC CONDUIT TO PULLBOX

12 - #6 VERTICAL

#4 TIES AT 12"

CONCRETE FOUNDATION 3000 P.S.I. IN 28 DAYS

3"

3" CLEAR, TYPICAL

30" DIA

ELEVATION

3" CLEAR

12 - #6 VERTICAL

#4 TIES AT 12"

FOUNDATION SECTION

BUSHING OPENING AND GROUND ROD CONNECTION TO BE READILY ACCESSIBLE FOR MAINTENANCE THRU HANDHOLE

ROADWAY

30" DIA

CONDUIT AND WIRING

GROUND ROD 5/8" DIA. x 10'-0", COPPERCLAD. PROVIDE GND ROD(S) AS REQUIRED IF GND RESISTANCE EXCEEDS 25 OHMS (MAX. ALLOWED)

14" SQUARE x 1" THICK GALVANIZED STEEL PLATE

4-7/8" DIA. HOLES @ 90°

ALIGN ANCHOR BOLTS PARALLEL WITH CURB

PULLBOX

15" BOLT CIRCLE

FORM GROUT

HANDHOLE

PLAN

B/E-22 BASE DETAIL
NOT TO SCALE

NOTES:

1. ALL HARDWARE SHALL BE STAINLESS STEEL AND EXTERIOR HARDWARE TAMPER RESISTANT.
2. ALL BOLTS, NUTS AND WASHERS SHALL BE GREASED AFTER INSTALLATION.

APPROVED:

8/1/00
CHIEF, MECHANICAL/ELECTRICAL DESIGN AND ENGINEERING DIVISION DEPARTMENT OF DESIGN AND CONSTRUCTION CITY AND COUNTY OF HONOLULU — DATE

8/16/00
CHIEF, TRAFFIC REVIEW BRANCH DEPARTMENT OF PLANNING AND PERMITTING CITY AND COUNTY OF HONOLULU — DATE

REVISION	DATE	DESCRIPTION	MADE BY	APPROVED

Planning - Engineering - Environmental Services - Photogrammetry - Surveying - Construction Management
R. M. TOWILL CORPORATION
808 842 1133 420 Waiakamilo Road Suite 411 Honolulu Hawaii 96817-4941

VINCENT K. MIYAGAWA LICENSED PROFESSIONAL ENGINEER No. 4534-E HAWAII, U.S.A.

THIS WORK WAS PREPARED BY ME OR UNDER MY SUPERVISION.
ECS, INC.
By
Its PROJECT ENGINEER
Date JULY 21, 2000

HAWAII COMMUNITY DEVELOPMENT AUTHORITY
STATE OF HAWAII
HONOLULU, HAWAII

KAKA'AKO COMMUNITY DEVELOPMENT DISTRICT
IMPROVEMENT DISTRICT 9
ILALO STREET IMPROVEMENTS
DECORATIVE STREET LIGHT DETAILS

ENGINEER: MA
DRAFTSMAN: RD
CHECKED BY: VM
DATE: JULY 21, 2000

EXECUTIVE DIRECTOR, HAWAII COMMUNITY DEVELOPMENT AUTHORITY

FILENAME: 60-32B4

FILE	POCKET	FOLDER	NO.

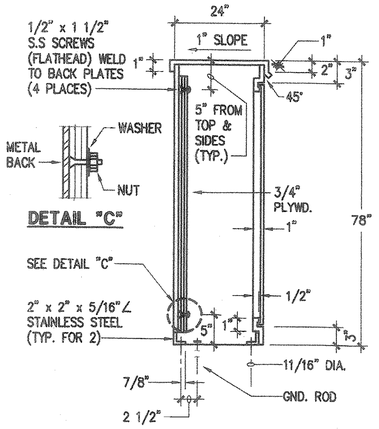

DETAIL "C"

SECTION "A"

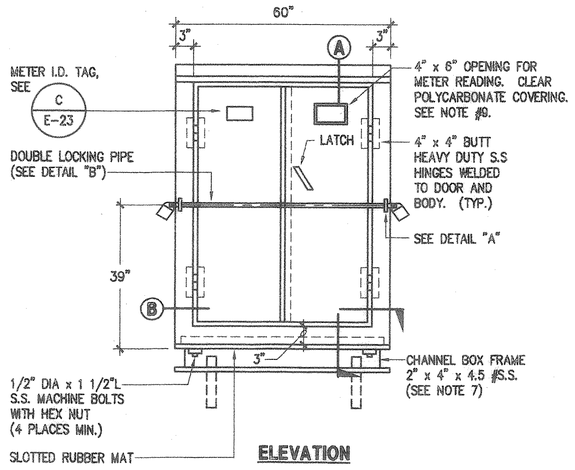

ELEVATION

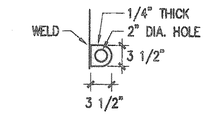

DETAIL "A"
SIDE VIEW

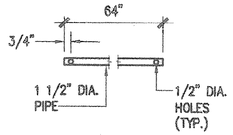

DETAIL "B"

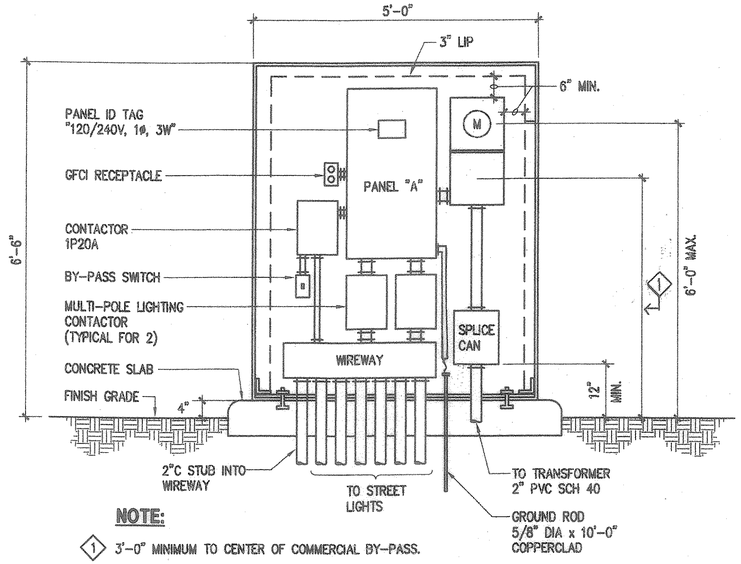

NOTE:

1. 3'-0" MINIMUM TO CENTER OF COMMERCIAL BY-PASS.

B / E-23 **STREET LIGHT SERVICE EQUIPMENT ELEVATION**
NOT TO SCALE

NOTES:

1. CABINET TO BE PRIMED WITH ONE COAT SHOP PRIMER.
2. PLYWOOD TO BE 3/4" THICK (MIN.) TREATED (WOLMANIZED) PLYWOOD. (EXTERIOR GRADE)
3. FABRICATED FROM 10 GA. STAINLESS STEEL.
4. PROVIDE ACRYLIC ENAMEL FINISH, COLOR TO MATCH HECO TRANSFORMER. (2 COATS)
5. ENCLOSURE SHALL BE NEMA 3R WITH NEOPRENE GASKET.
6. PADLOCKS:
   1 – HECo FURNISHED
   1 – CONTRACTOR FURNISHED, BRASS CORBIN SESAME COMBINATION
7. WASH CHANNEL WITH SOLUTION OF CHEMICAL PHOSPHORIC METAL ETCH AND ALLOW TO DRY. APPLY 2 COATS OF GALVANIZED METAL PRIMER AND 2 COATS OF ENAMEL TO MATCH CABINET.
8. SHOP FABRICATION DRAWINGS SHALL BE SUBMITTED FOR APPROVAL. ADJUST HEIGHT AND WIDTH OF CABINET AS REQUIRED TO INSTALL EQUIPMENT BEING FURNISHED.
9. LOCATION OF OPENING FOR METER READER TO CORRESPOND WITH LOCATION OF METER.
10. GROUND CABINET FRAME.

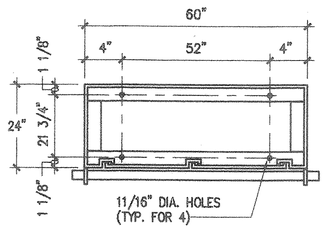

SECTION "B"
(ANGLE FRAME)

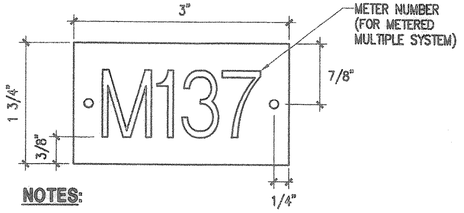

NOTES:

1. USE 2 PLY PLASTIC – BLACK, WHITE.
2. NUMBER SIZE SHALL BE 1" HIGH AND ENGRAVED 1/8" WIDE, WHITE IN COLOR (NUMBER AS REQUIRED).
3. ATTACH TO METER ENCLOSURE WITH No. 7 STAINLESS STEEL DRIVE SCREWS.

C / E-23 **METER ENCLOSURE I.D. TAG**
NOT TO SCALE

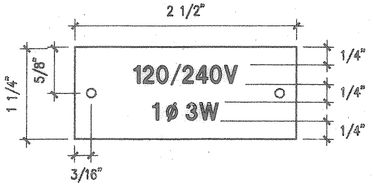

NOTES:

1. USE 2 PLY PLASTIC – BLACK, WHITE.
2. LETTER SIZE SHALL BE 1/4" HIGH AND ENGRAVED 1/32" WIDE, WHITE IN COLOR.
3. ATTACH TO PANEL WITH No. 7 STAINLESS STEEL DRIVE SCREWS.

D / E-23 **PANEL I.D. TAG DETAIL**
NOT TO SCALE

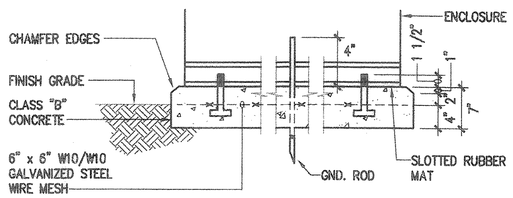

FRONT

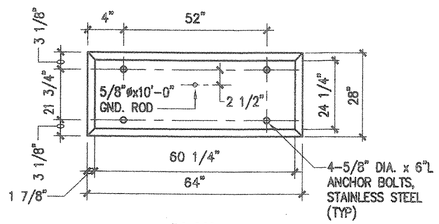

PLAN

CONCRETE PAD

A / E-23 **STREET LIGHT METER AND EQUIPMENT CABINET**
NOT TO SCALE

DRAWING REVIEW
Reviewed for HECO's Facilities Only
Date 8/9/00 By
Engineering Department
Hawaiian Electric Company, Inc.

HECO's review of these drawings shall in no way relieve the Customer, its Consultant, its Contractor or anyone acting on the Customer's behalf from the responsibility for engineering, design, materials, and any other liability associated with this Project.

APPROVED:

HAWAIIAN ELECTRIC COMPANY, INC. DATE

8/11/00
CHIEF, MECHANICAL/ELECTRICAL DESIGN AND ENGINEERING DIVISION DEPARTMENT OF DESIGN AND CONSTRUCTION CITY AND COUNTY OF HONOLULU DATE

8.8.00
CHIEF, TRAFFIC REVIEW BRANCH DEPARTMENT OF PLANNING AND PERMITTING CITY AND COUNTY OF HONOLULU DATE

REVISION	DATE	DESCRIPTION	MADE BY	APPROVED

Planning – Engineering – Environmental Services – Photogrammetry – Surveying – Construction Management
R. M. TOWILL CORPORATION
808 842 1133 420 Waiakamilo Road Suite 411 Honolulu Hawaii 96817-4941

VINCENT K. MIYAGAWA
LICENSED PROFESSIONAL ENGINEER
No. 4534-E
HAWAII, U.S.A.

THIS WORK WAS PREPARED BY ME OR UNDER MY SUPERVISION.
ECS, INC.
By
Its PROJECT ENGINEER
Date JULY 21, 2000

HAWAII COMMUNITY DEVELOPMENT AUTHORITY
STATE OF HAWAII
HONOLULU, HAWAII
KAKA'AKO COMMUNITY DEVELOPMENT DISTRICT
IMPROVEMENT DISTRICT 9
ILALO STREET IMPROVEMENTS
STREET LIGHT METERING ENCLOSURE DETAILS

ENGINEER: MA CHECKED BY: VM
DRAFTSMAN: CM DATE: JULY 21, 2000
EXECUTIVE DIRECTOR, HAWAII COMMUNITY DEVELOPMENT AUTHORITY

FILENAME: 60-32B2

FILE	POCKET	FOLDER	NO.

"RECORD DRAWINGS" E-23 SHEET 99 OF 140 SHEETS

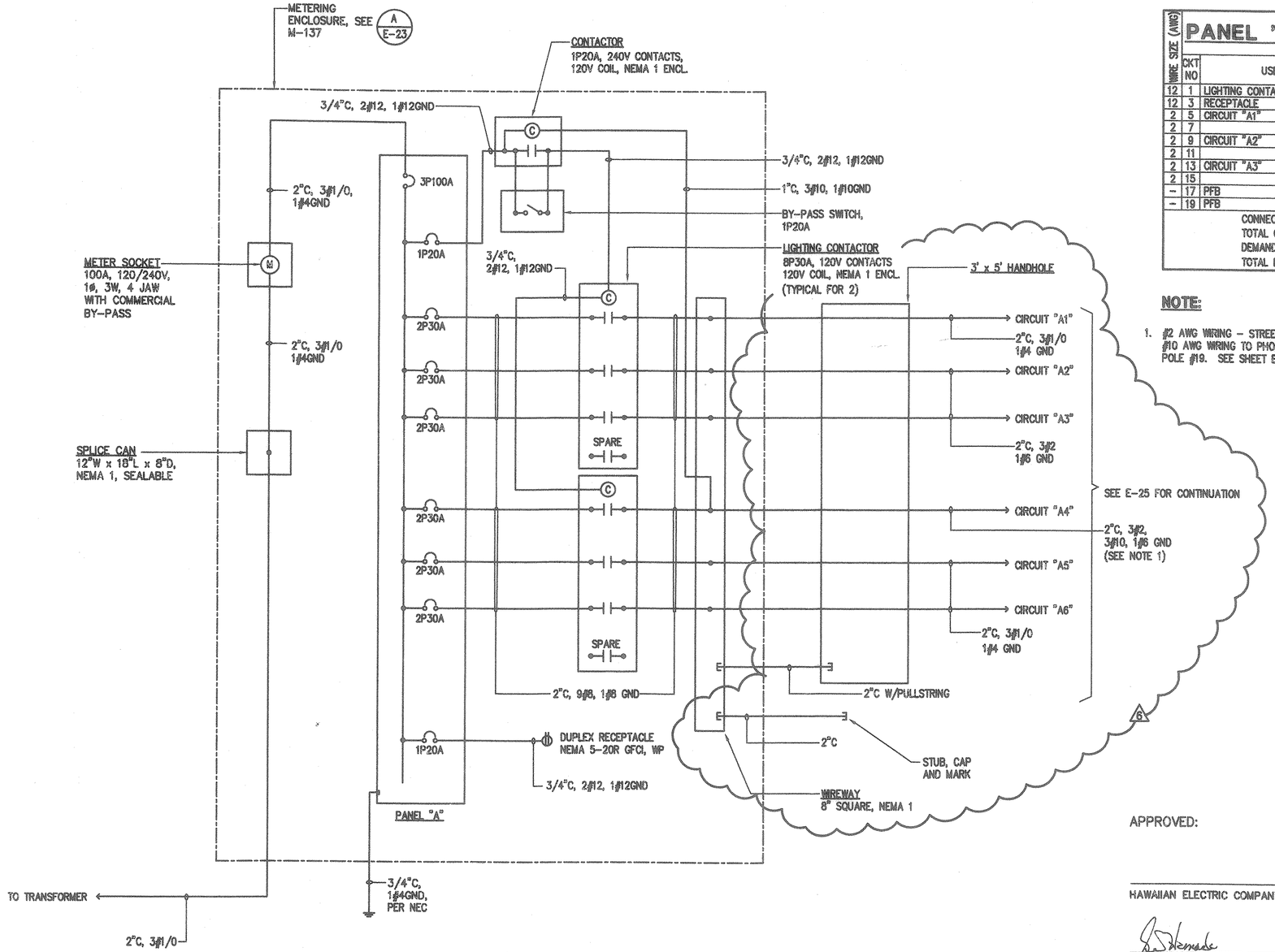

STREET LIGHTING ONE LINE DIAGRAM

NOT TO SCALE

PANEL "A" — 120/240 VOLTS, 1 PHASE, 3 WIRE; 100 AMP MAIN BREAKER; REQ'D OPTIONS: ; MIN AIC: 22,000; MOUNTING: SURFACE

WIRE SIZE (AWG)	CKT NO	USE	CKT BKR POLE	CKT BKR AMP	CONN LOAD (KVA) PHASE A	CONN LOAD (KVA) PHASE B	CKT BKR AMP	CKT BKR POLE	USE	CKT NO	WIRE SIZE (AWG)
12	1	LIGHTING CONTACTOR	1	20	0.5	1.3	30	/	CIRCUIT "A4"	2	2
12	3	RECEPTACLE	1	20		0.5 | 1.3	/	2		4	2
2	5	CIRCUIT "A1"	2	/	0.8	1.1	30	/	CIRCUIT "A5"	6	2
2	7		/	30		0.8 | 1.1	/	2		8	2
2	9	CIRCUIT "A2"	2	/	0.9	0.9	30	/	CIRCUIT "A6"	10	2
2	11		/	30		0.9 | 0.9	/	2		12	2
2	13	CIRCUIT "A3"	2	/	0.9	--	--	1	PFB	14	--
2	15		/	30		0.9 | --	--	1	PFB	16	--
--	17	PFB	1	--	--	--	--	1	PFB	18	--
--	19	PFB	1	--		-- | --	--	1	PFB	20	--
		CONNECTED LOAD/PHASE			6.6	6.6					
		TOTAL CONNECTED LOAD			13.2 KVA						
		DEMAND FACTOR			1.0						
		TOTAL DEMAND LOAD			13.2 KVA=	55 AMPS					

NOTE:

1. #2 AWG WIRING – STREET LIGHT FEEDER #10 AWG WIRING TO PHOTOCELL AT LIGHT POLE #19. SEE SHEET E-25.

APPROVED:

HAWAIIAN ELECTRIC COMPANY, INC. DATE

6/12/02

CHIEF, MECHANICAL/ELECTRICAL DESIGN AND ENGINEERING DIVISION DEPARTMENT OF DESIGN AND CONSTRUCTION CITY AND COUNTY OF HONOLULU — DATE

7/8/02

CHIEF, TRAFFIC REVIEW BRANCH DEPARTMENT OF PLANNING AND PERMITTING CITY AND COUNTY OF HONOLULU — DATE

REVISION	DATE	DESCRIPTION	MADE BY	APPROVED
6	4/5/02	REVISED CONDUCTOR SIZING	MA	

Planning – Engineering – Environmental Services – Photogrammetry – Surveying – Construction Management
R. M. TOWILL CORPORATION
808 842 1133 420 Waiakamilo Road Suite 411 Honolulu Hawaii 96817-4941

VINCENT K. MIYAGAWA — LICENSED PROFESSIONAL ENGINEER — No. 4634-E — HAWAII, U.S.A.

THIS WORK WAS PREPARED BY ME OR UNDER MY SUPERVISION.
ECS, INC.
By
Its PROJECT ENGINEER
Date JULY 21, 2000

HAWAII COMMUNITY DEVELOPMENT AUTHORITY
STATE OF HAWAII
HONOLULU, HAWAII
KAKA'AKO COMMUNITY DEVELOPMENT DISTRICT
IMPROVEMENT DISTRICT 9
ILALO STREET IMPROVEMENTS
STREET LIGHTING ONE LINE DIAGRAM

ENGINEER: MA CHECKED BY: VM
DRAFTSMAN: CM DATE: 1/5/01

EXECUTIVE DIRECTOR, HAWAII COMMUNITY DEVELOPMENT AUTHORITY

FILE	POCKET	FOLDER	NO.

5/21/02-14:05 Y:\060\e60-32\60-32B11.dwg

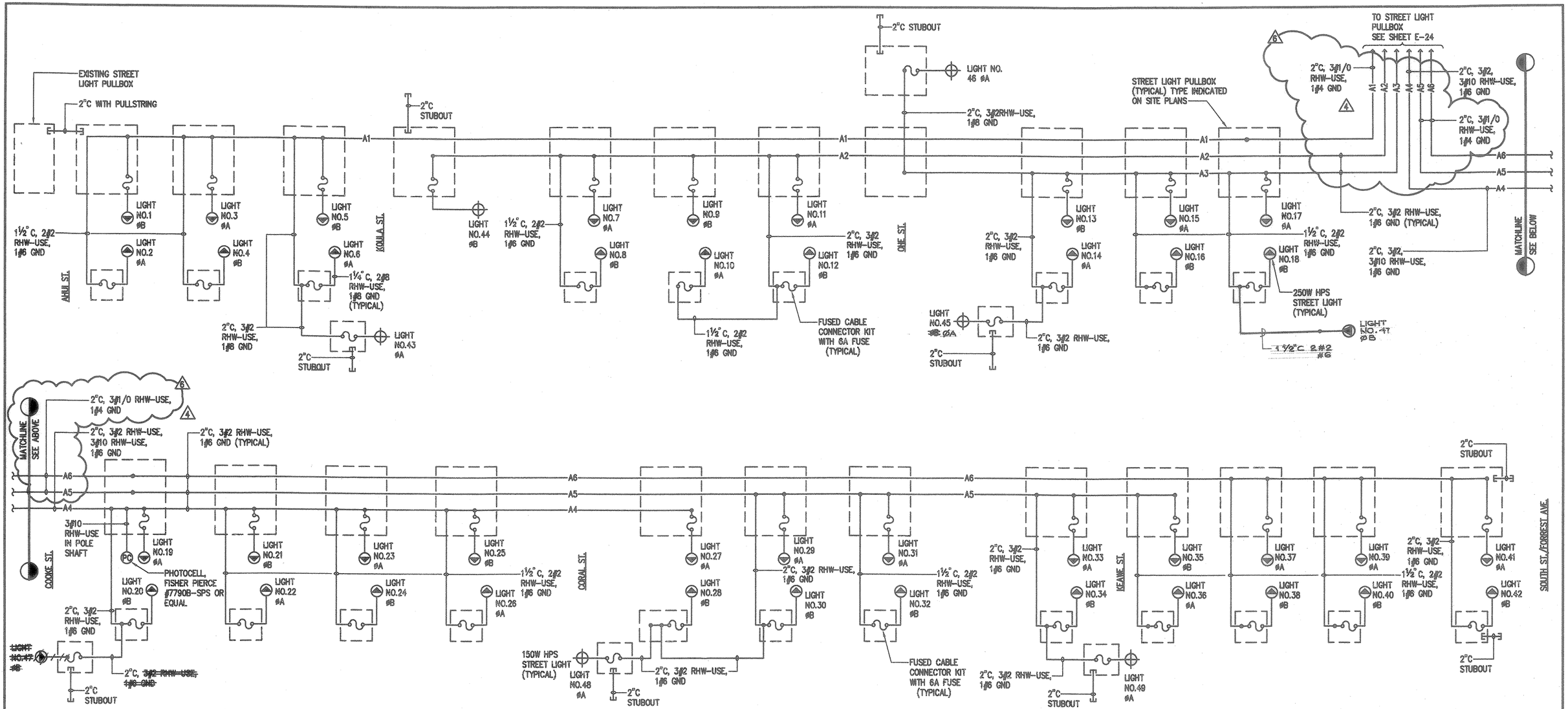

NOTES:

1. CONTRACTOR SHALL IDENTIFY ALL CIRCUIT CABLES WITH CABLE I.D. TAG. SEE (D / E-21)
2. ALL NEUTRAL CONDUCTORS SHALL BE IDENTIFIED WITH WHITE INSULATION. OTHER MEANS OF IDENTIFICATION NOT ACCEPTABLE.
3. REFER TO SHEET E-21 FOR WIRING CONNECTIONS IN STREET LIGHT POLE BASE.

STREET LIGHT CONNECTION DIAGRAM

NOT TO SCALE

APPROVED:

6/12/02
CHIEF, MECHANICAL/ELECTRICAL DESIGN AND ENGINEERING DIVISION DEPARTMENT OF DESIGN AND CONSTRUCTION CITY AND COUNTY OF HONOLULU — DATE

6/13/02
CHIEF, TRAFFIC REVIEW BRANCH DEPARTMENT OF PLANNING AND PERMITTING CITY AND COUNTY OF HONOLULU — DATE

REVISION	DATE	DESCRIPTION	MADE BY	APPROVED
B	4/5/02	REVISED CONDUCTOR SIZING	MA	
A	9/19/01	ELIMINATED SLPB	MA	

Planning – Engineering – Environmental Services – Photogrammetry – Surveying – Construction Management
R. M. TOWILL CORPORATION
808 842 1133 420 Waiakamilo Road Suite 411 Honolulu Hawaii 96817-4941

VINCENT K. MIYAGAWA — LICENSED PROFESSIONAL ENGINEER — No. 4634-E — HAWAII, U.S.A.

THIS WORK WAS PREPARED BY ME OR UNDER MY SUPERVISION.
ECS, INC.
By
Its PROJECT ENGINEER
Date JULY 21, 2000

HAWAII COMMUNITY DEVELOPMENT AUTHORITY
STATE OF HAWAII
HONOLULU, HAWAII
KAKA'AKO COMMUNITY DEVELOPMENT DISTRICT
IMPROVEMENT DISTRICT 9
ILALO STREET IMPROVEMENTS
STREET LIGHT CONNECTION DIAGRAM

ENGINEER: MA — CHECKED BY: VM
DRAFTSMAN: CM — DATE: 1/5/01

EXECUTIVE DIRECTOR, HAWAII COMMUNITY DEVELOPMENT AUTHORITY

5/21/02-14:05 Y:\060\e60-32\60-32D1.dwg

"RECORD DRAWINGS" E-25 SHEET 101 OF 140 SHEETS

FILE	POCKET	FOLDER	NO.

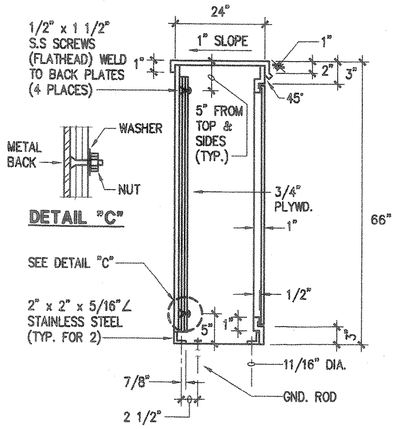

SECTION "A"

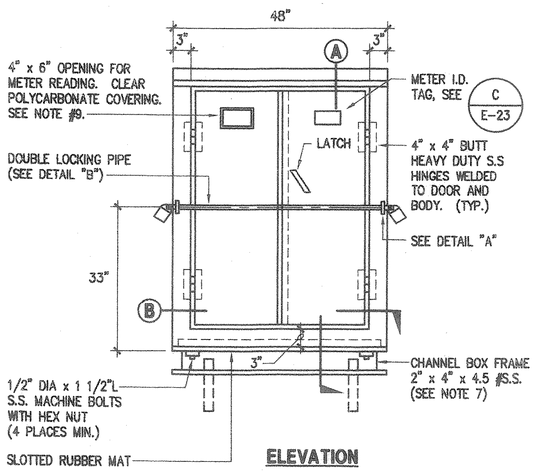

ELEVATION

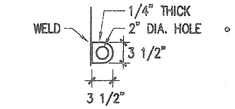

DETAIL "A"
SIDE VIEW

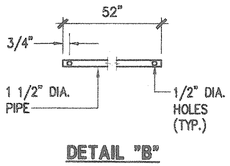

DETAIL "B"

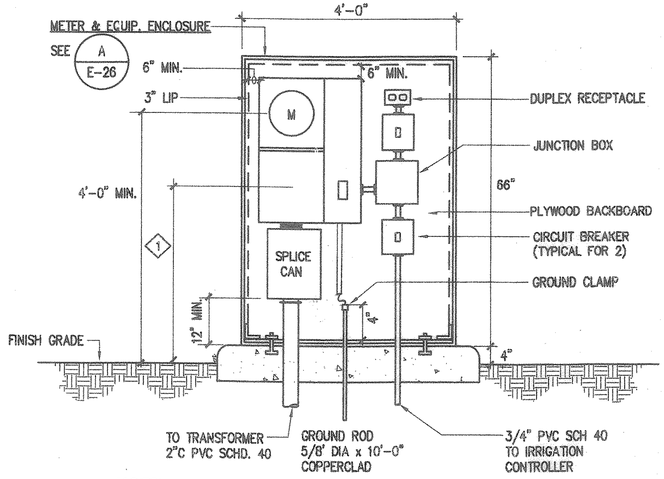

NOTE:

1. 3'-0" MINIMUM TO CENTER OF COMMERCIAL BY-PASS.

B E-26 IRRIGATION SERVICE EQUIPMENT ELEVATION

NOT TO SCALE

NOTES:

1. CABINET TO BE PRIMED WITH ONE COAT SHOP PRIMER.
2. PLYWOOD TO BE 3/4" THICK (MIN.) TREATED (WOLMANIZED) PLYWOOD. (EXTERIOR GRADE)
3. FABRICATED FROM 10 GA. STAINLESS STEEL.
4. PROVIDE ACRYLIC ENAMEL FINISH, COLOR TO MATCH HECO TRANSFORMER. (2 COATS)
5. ENCLOSURE SHALL BE NEMA 3R WITH NEOPRENE GASKET.
6. PADLOCKS:
   1 – HECo FURNISHED
   1 – CONTRACTOR FURNISHED, BRASS CORBIN SESAME COMBINATION
7. WASH CHANNEL WITH SOLUTION OF CHEMICAL PHOSPHORIC METAL ETCH AND ALLOW TO DRY. APPLY 2 COATS OF GALVANIZED METAL PRIMER AND 2 COATS OF ENAMEL TO MATCH CABINET.
8. SHOP FABRICATION DRAWINGS SHALL BE SUBMITTED FOR APPROVAL. ADJUST HEIGHT AND WIDTH OF CABINET AS REQUIRED TO INSTALL EQUIPMENT BEING FURNISHED.
9. LOCATION OF OPENING FOR METER READER TO CORRESPOND WITH LOCATION OF METER.
10. GROUND CABINET FRAME.

SECTION "B" (ANGLE FRAME)

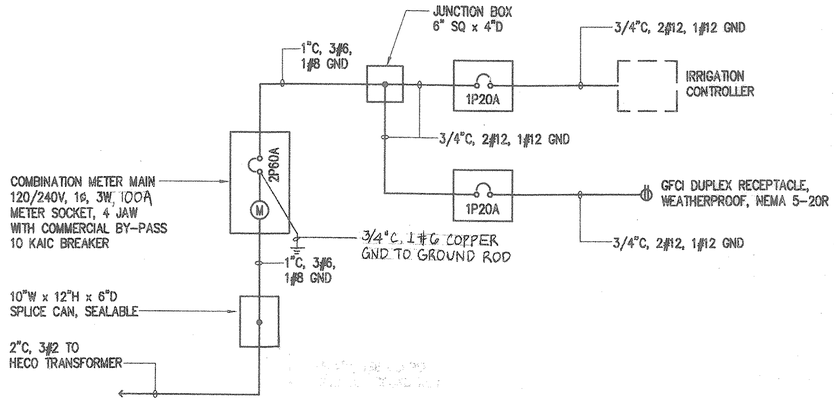

C E-26 IRRIGATION ONE-LINE DIAGRAM

NO SCALE

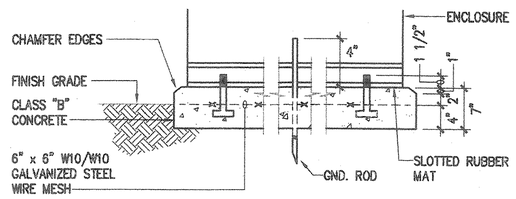

FRONT

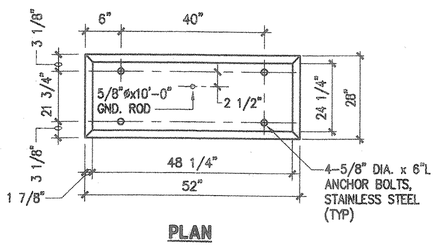

PLAN

CONCRETE PAD

A E-26 IRRIGATION METER AND EQUIPMENT CABINET

NOT TO SCALE

DRAWING REVIEW
Reviewed for HECO's Failicities Only
Date 8/9/00 By [signature]
Engineering Department
Hawaiian Electric Company, Inc.

HECO's review of these drawings shall in no way relieve the Customer, its Consultant, its Contractor or anyone acting on the Customer's behalf from the responsibility for engineering, design, materials, and any other liability associated with this Project.

APPROVED:

HAWAIIAN ELECTRIC COMPANY, INC. DATE

[signature] 8/1/00

CHIEF, MECHANICAL/ELECTRICAL DESIGN AND ENGINEERING DIVISION DEPARTMENT OF DESIGN AND CONSTRUCTION CITY AND COUNTY OF HONOLULU — DATE

8/8/00

CHIEF, TRAFFIC REVIEW BRANCH DEPARTMENT OF PLANNING AND PERMITTING CITY AND COUNTY OF HONOLULU — DATE

REVISION	DATE	DESCRIPTION	MADE BY	APPROVED

Planning – Engineering – Environmental Services – Photogrammetry – Surveying – Construction Management
R. M. TOWILL CORPORATION
808 842 1133 420 Waiakamilo Road Suite 411 Honolulu Hawaii 96817-4941

VINCENT K. MIYAGAWA LICENSED PROFESSIONAL ENGINEER No. 4534-E HAWAII, U.S.A.

THIS WORK WAS PREPARED BY ME OR UNDER MY SUPERVISION.
ECS, INC.
By [signature]
Its PROJECT ENGINEER
Date JULY 21, 2000

HAWAII COMMUNITY DEVELOPMENT AUTHORITY
STATE OF HAWAII
HONOLULU, HAWAII
KAKA'AKO COMMUNITY DEVELOPMENT DISTRICT
IMPROVEMENT DISTRICT 9
ILALO STREET IMPROVEMENTS
IRRIGATION METERING ENCLOSURE DETAILS

ENGINEER: MA CHECKED BY: VM
DRAFTSMAN: CM DATE: JULY 21, 2000
[signature]
EXECUTIVE DIRECTOR, HAWAII COMMUNITY DEVELOPMENT AUTHORITY

FILENAME: 60-3211

FILE	POCKET	FOLDER	NO.

DUCT SCHEDULE

TYPE	DESCRIPTION	CABLES
1	6" HECO PRIMARY, PVC SCHEDULE 40, CONCRETE ENCASED	BY HECO, PROVIDE PULLWIRE
2	4" HECO PRIMARY, PVC SCHEDULE 40, CONCRETE ENCASED	BY HECO, PROVIDE PULLWIRE
3	2" HECO 1ø PRIMARY, PVC SCHEDULE 40, CONCRETE ENCASED	BY HECO, PROVIDE PULLWIRE
4	3" HECO SECONDARY, PVC SCHEDULE 40 CONCRETE ENCASED	AS NOTED
5	AREA LIGHTING, PVC SCHEDULE 40, SIZE AS NOTED, CONCRETE ENCASED	AS NOTED
6	4" HTCO, TYPE GTS, CONCRETE ENCASED	BY HTCO, PROVIDE MULETAPE
7	2" HTCO, TYPE GTS, CONCRETE ENCASED	BY HTCO, PROVIDE MULETAPE
8	4" CATV, PVC SCHEDULE 40, CONCRETE ENCASED	BY OCEANIC, PROVIDE MULETAPE
9	2" STREET LIGHTING, PVC SCHEDULE 40, CONCRETE ENCASED	SEE ONE-LINE DIAGRAM AND STREET LIGHT CONNECTION DIAGRAM
10	1½" STREET LIGHTING, PVC SCHEDULE 40, CONCRETE ENCASED	SEE ONE-LINE DIAGRAM AND STREET LIGHT CONNECTION DIAGRAM
11	2" TRAFFIC SIGNAL, PVC SCHEDULE 40, CONCRETE ENCASED	NONE, PROVIDE PULLSTRING
12	4" SIGNAL CORPS, PVC SCHEDULE 40, CONCRETE ENCASED	FIELD VERIFY AND MATCH EXISTING
13	3" CITY COMMUNICATIONS, PVC SCHEDULE 40, CONCRETE ENCASED	BY CITY, PROVIDE PULLSTRING

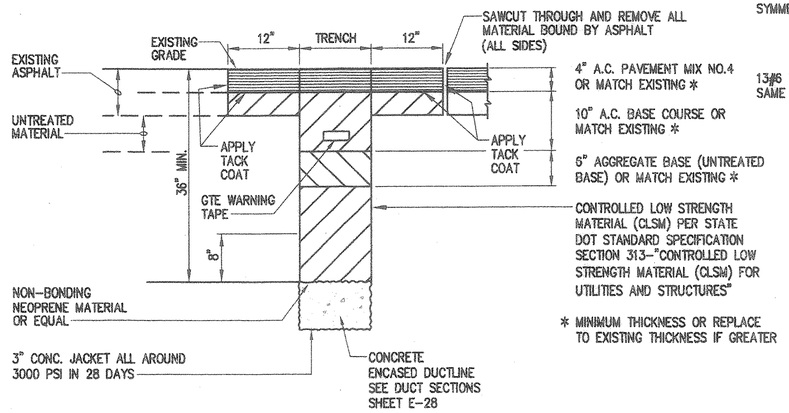

B / E-27 TYPICAL PAVEMENT RESTORATION - STATE RIGHT OF WAY
NOT TO SCALE

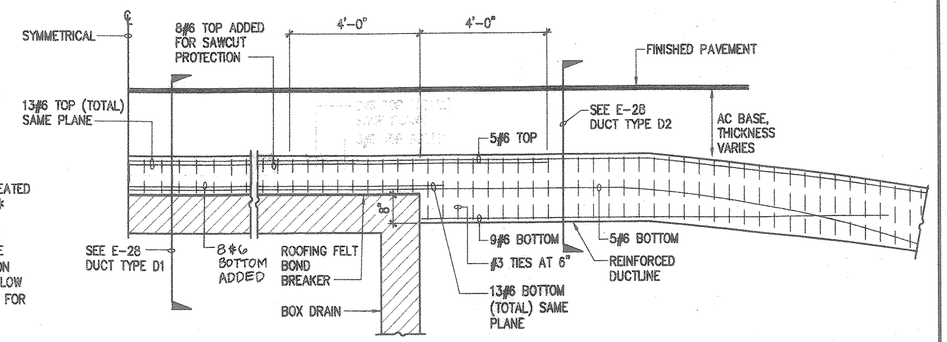

E / E-27 HTCO REINFORCED DUCTLINE
NOT TO SCALE

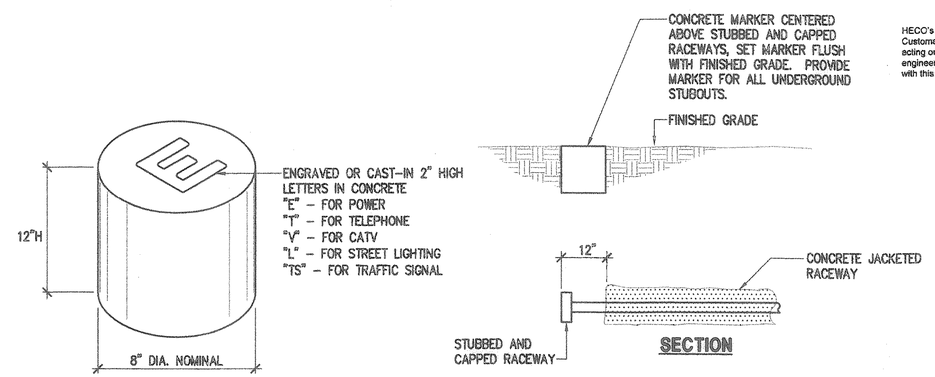

C / E-27 CONCRETE MARKER DETAIL
NOT TO SCALE

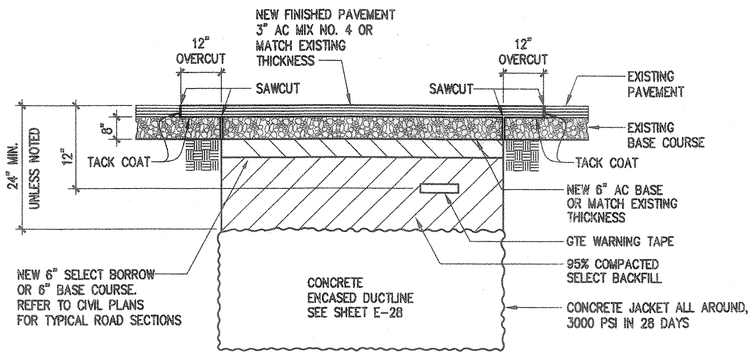

A / E-27 TYPICAL PAVEMENT RESTORATION - C&C RIGHT OF WAY
NOT TO SCALE

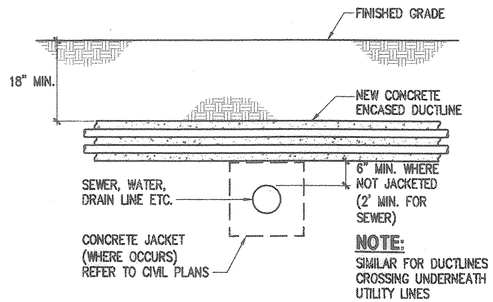

D / E-27 TYPICAL CONDUIT BY-PASS DETAIL
NOT TO SCALE

DRAWING REVIEW

Reviewed for HECO's Facilities Only

Date 8/9/00 By [signature]

Engineering Department
Hawaiian Electric Company, Inc.

HECO's review of these drawings shall in no way relieve the Customer, its Consultant, its Contractor or anyone acting on the Customer's behalf from the responsibility for engineering, design, materials and any other liability associated with this project.

APPROVED:

HAWAIIAN ELECTRIC COMPANY, INC — DATE

GTE HAWAIIAN TEL — 8/7/00 DATE

OCEANIC CABLEVISION — 8-4-00 DATE

CHIEF, MECHANICAL/ELECTRICAL DESIGN AND ENGINEERING DIVISION CITY AND COUNTY OF HONOLULU (FOR STREET LIGHT WORK AND CITY COMMUNICATIONS) — DATE 8/1/00

CHIEF, TRAFFIC SIGNAL AND TECHNOLOGY DIVISION DEPARTMENT OF TRANSPORTATION SERVICES CITY AND COUNTY OF HONOLULU (FOR TRAFFIC SIGNAL WORK ONLY) — DATE 8/2/00

CHIEF, TRAFFIC REVIEW BRANCH DEPARTMENT OF PLANNING AND PERMITTING CITY AND COUNTY OF HONOLULU — DATE 8.1.00

REVISION	DATE	DESCRIPTION	MADE BY	APPROVED

R. M. TOWILL CORPORATION
Planning – Engineering – Environmental Services – Photogrammetry – Surveying – Construction Management
808 842 1133 420 Waiakamilo Road Suite 411 Honolulu Hawaii 96817-4941

HAWAII COMMUNITY DEVELOPMENT AUTHORITY
STATE OF HAWAII
HONOLULU, HAWAII

KAKA'AKO COMMUNITY DEVELOPMENT DISTRICT
IMPROVEMENT DISTRICT 9
ILALO STREET IMPROVEMENTS

DUCT SCHEDULE, DUCT DETAILS

VINCENT K. MIYAGAWA — LICENSED PROFESSIONAL ENGINEER — No. 4534-E — HAWAII, U.S.A.

THIS WORK WAS PREPARED BY ME OR UNDER MY SUPERVISION.
ECS, INC.
By [signature]
Its PROJECT ENGINEER
Date JULY 21, 2000

ENGINEER: MA CHECKED BY: VM
DRAFTSMAN: MO DATE: JULY 21, 2000

EXECUTIVE DIRECTOR, HAWAII COMMUNITY DEVELOPMENT AUTHORITY

FILENAME: 60-3287

FILE	POCKET	FOLDER	NO.

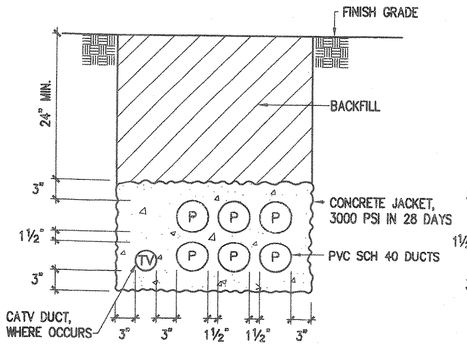

DUCT DETAIL TYPE A
NOT TO SCALE

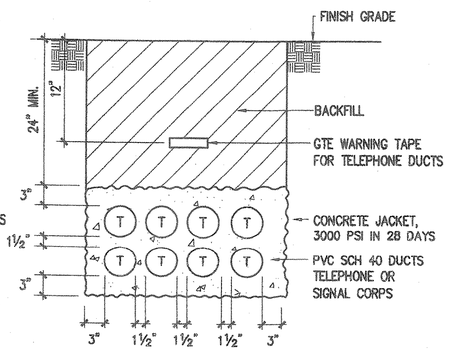

DUCT DETAIL TYPE B
NOT TO SCALE

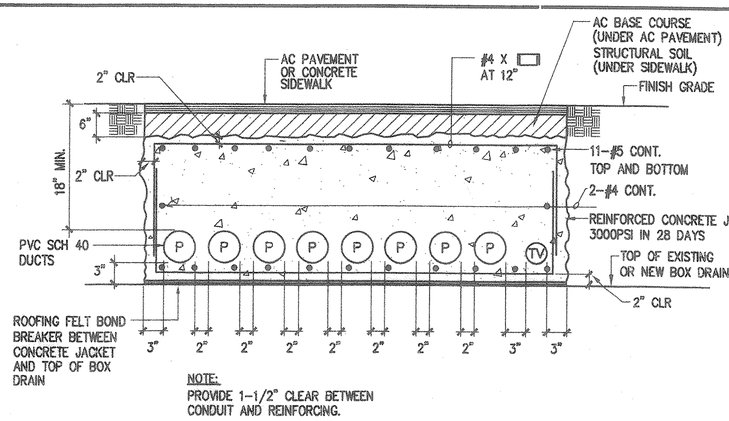

NOTE:
PROVIDE 1-1/2" CLEAR BETWEEN CONDUIT AND REINFORCING.

DUCT DETAIL TYPE C
NOT TO SCALE

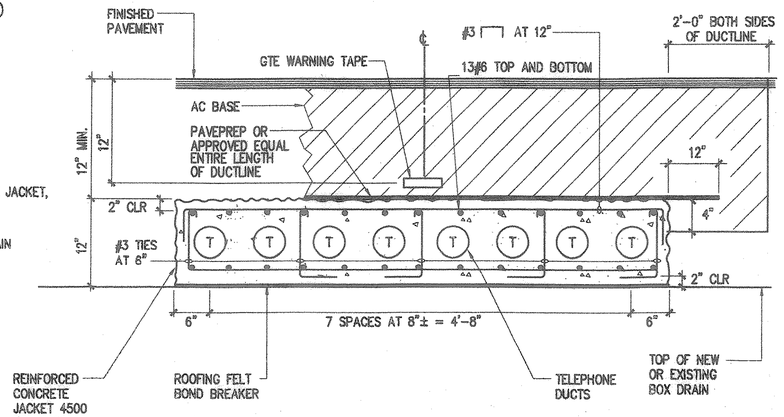

DUCT DETAIL TYPE D1
NOT TO SCALE

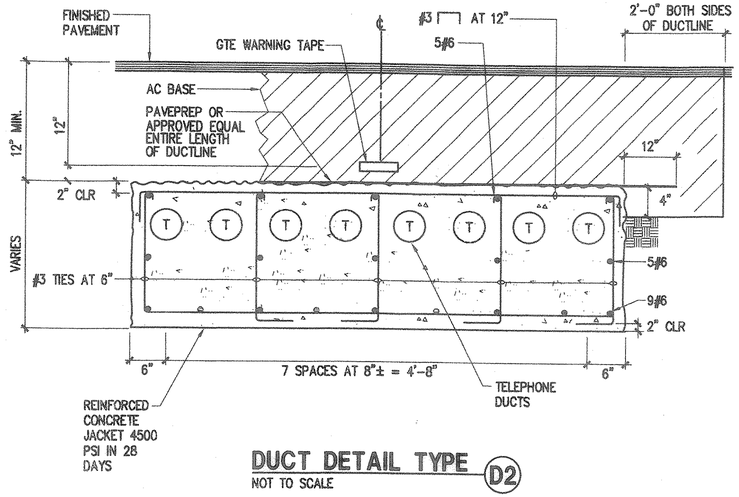

DUCT DETAIL TYPE D2
NOT TO SCALE

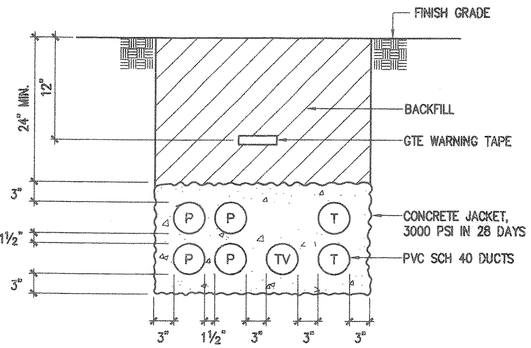

DUCT DETAIL TYPE E
NOT TO SCALE

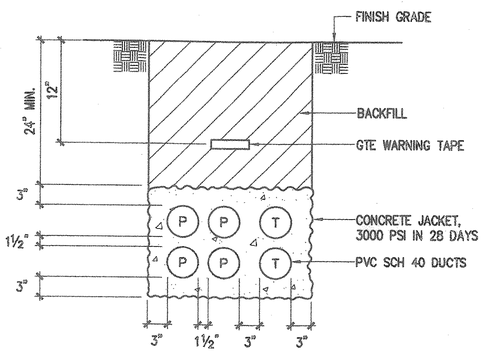

DUCT DETAIL TYPE F
NOT TO SCALE

DRAWING REVIEW
Reviewed for HECO's Facilities Only
Date 8/9/00 By
Engineering Department
Hawaiian Electric Company, Inc.

HECO's review of these drawings shall in no way relieve the Customer, its Consultant, its Contractor or anyone acting on the Customer's behalf from the responsibility for engineering, design, materials, and any other liability associated with this Project.

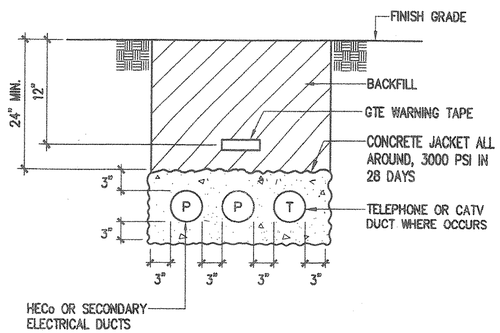

DUCT DETAIL TYPE G
NOT TO SCALE

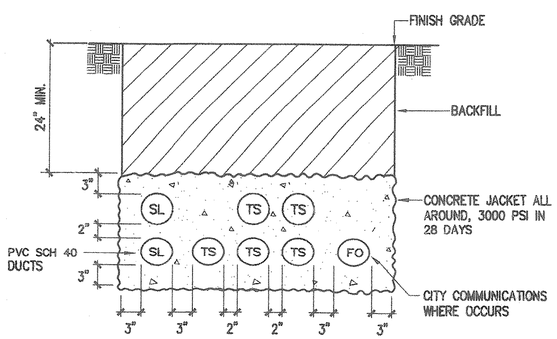

DUCT DETAIL TYPE H
NOT TO SCALE

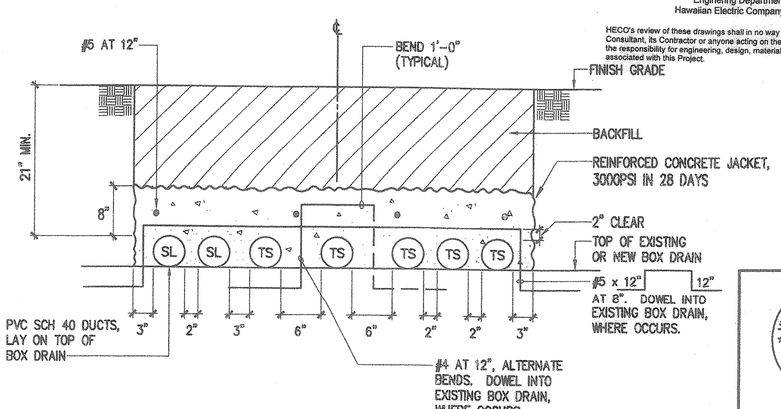

DUCT DETAIL TYPE I
NOT TO SCALE

NOTES:

1. DUCT SECTIONS ARE TYPICAL AND DUCT QUANTITIES VARY. REFER TO ROADWAY PLANS FOR DUCT TYPES AND QUANTITIES.
2. REFER TO CIVIL PLANS FOR TYPICAL ROADWAY AND SIDEWALK SECTIONS.

APPROVED:

HAWAIIAN ELECTRIC COMPANY, INC	DATE 8/7/00
GTE HAWAIIAN TEL	DATE 8/7/00
OCEANIC CABLEVISION	DATE 8/11/00
CHIEF, MECHANICAL/ELECTRICAL DESIGN AND ENGINEERING DIVISION CITY AND COUNTY OF HONOLULU (FOR STREET LIGHT WORK AND CITY COMMUNICATIONS)	DATE 8/8/00
CHIEF, TRAFFIC SIGNAL AND TECHNOLOGY DIVISION DEPARTMENT OF TRANSPORTATION SERVICES CITY AND COUNTY OF HONOLULU (FOR TRAFFIC SIGNAL WORK ONLY)	DATE 8/9/00
CHIEF, TRAFFIC REVIEW BRANCH DEPARTMENT OF PLANNING AND PERMITTING CITY AND COUNTY OF HONOLULU	DATE

REVISION	DATE	DESCRIPTION	MADE BY	APPROVED

Planning – Engineering – Environmental Services – Photogrammetry – Surveying – Construction Management
R. M. TOWILL CORPORATION
808 842 1133 420 Waiakamilo Road Suite 411 Honolulu Hawaii 96817-4941

VINCENT K. MIYAGAWA — LICENSED PROFESSIONAL ENGINEER — No. 4534-E — HAWAII, U.S.A.

THIS WORK WAS PREPARED BY ME OR UNDER MY SUPERVISION.
ECS, INC.
By
Its PROJECT ENGINEER
Date JULY 21, 2000

HAWAII COMMUNITY DEVELOPMENT AUTHORITY
STATE OF HAWAII
HONOLULU, HAWAII

KAKA'AKO COMMUNITY DEVELOPMENT DISTRICT
IMPROVEMENT DISTRICT 9

ILALO STREET IMPROVEMENTS

DUCT DETAILS

ENGINEER: MA
DRAFTSMAN: MO
CHECKED BY: VM
DATE: JULY 21, 2000

EXECUTIVE DIRECTOR, HAWAII COMMUNITY DEVELOPMENT AUTHORITY

FILENAME: 60-3286

FILE	POCKET	FOLDER	NO.

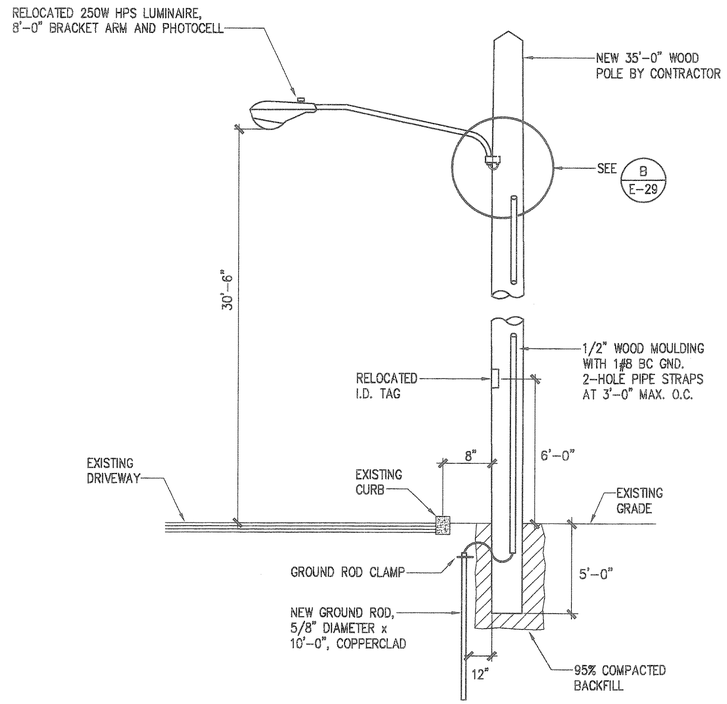

NOTES:

1. IF NEW, POLE SHALL BE TREATED WITH PENTACHLOROPHENOL USING THE CEFLON PROCESS BY LICENSED TERMITE TREATMENT COMPANY.

2. TERMITE TREAT THE BOTTOM OF THE HOLE AND BACKFILL MATERIAL WITH AQUEOUS CHEMICAL SOLUTION CONSISTING OF 0.5% ALDRIN OR 0.5% DRAGNET. MINIMUM 5 GALLONS OF THE SOLUTION SHALL BE USED FOR EACH POLE.

   APPLICATION SHALL BE PERFORMED BY CONTRACTOR LICENSED FOR THIS TYPE OF WORK.

   TREATMENT SHALL BE DONE AS THE HOLE IS BEING BACKFILLED.

A E-29 OVERHEAD DRIVEWAY LIGHT DETAIL

NOT TO SCALE

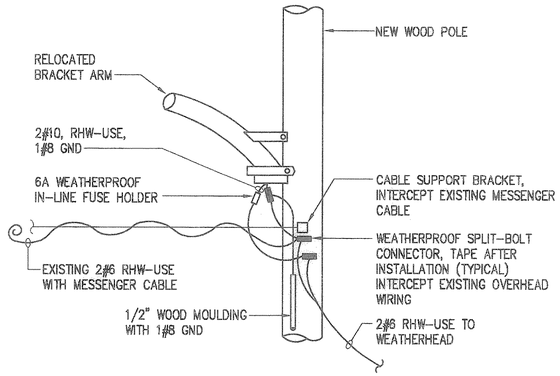

B E-29 OVERHEAD DRIVEWAY LIGHT CONNECTION DETAIL

NOT TO SCALE

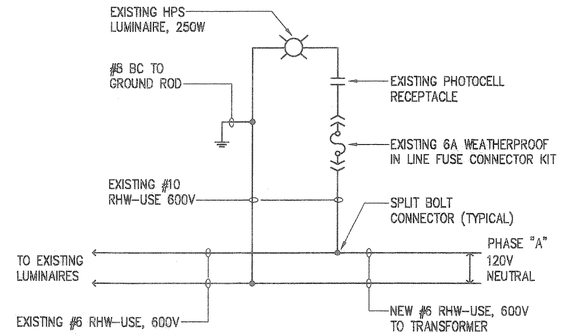

C E-29 DRIVEWAY LIGHT WIRING DIAGRAM

NOT TO SCALE

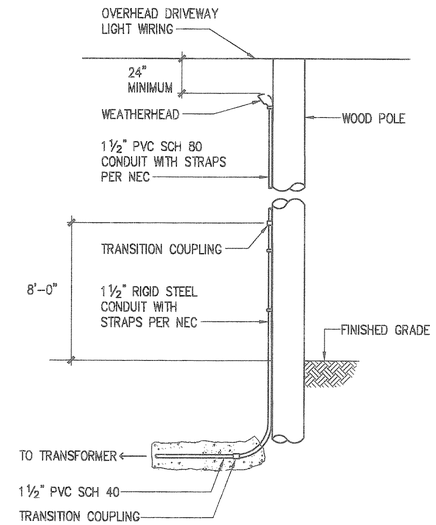

D E-29 CONDUIT STUB-UP AT UTILITY POLE

NOT TO SCALE

APPROVED:

HAWAIIAN ELECTRIC COMPANY, INC DATE

REVISION	DATE	DESCRIPTION	MADE BY	APPROVED

Planning - Engineering - Environmental Services - Photogrammetry - Surveying - Construction Management
R. M. TOWILL CORPORATION
808 842 1133 420 Waiakamilo Road Suite 411 Honolulu Hawaii 96817-4941

VINCENT K. MIYAGAWA LICENSED PROFESSIONAL ENGINEER No. 4534-E HAWAII, U.S.A.

THIS WORK WAS PREPARED BY ME OR UNDER MY SUPERVISION.

ECS, INC.

By _____

Its PROJECT ENGINEER

Date JULY 21, 2000

HAWAII COMMUNITY DEVELOPMENT AUTHORITY
STATE OF HAWAII
HONOLULU, HAWAII

KAKA'AKO COMMUNITY DEVELOPMENT DISTRICT
IMPROVEMENT DISTRICT 9
ILALO STREET IMPROVEMENTS

DRIVEWAY LIGHT DETAILS -
TMK: 2-1-60:07

ENGINEER: MA CHECKED BY: VM

DRAFTSMAN: CM DATE: JULY 21, 2000

EXECUTIVE DIRECTOR, HAWAII COMMUNITY DEVELOPMENT AUTHORITY

FILE	POCKET	FOLDER	NO.

FILENAME: 60-3288

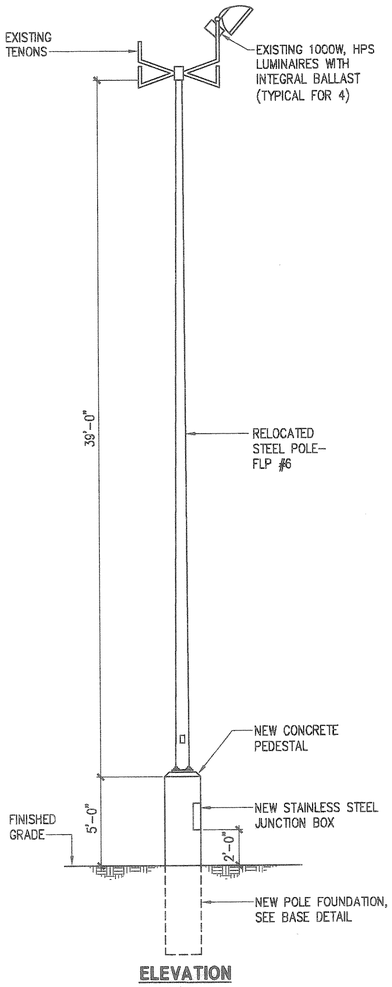

ELEVATION

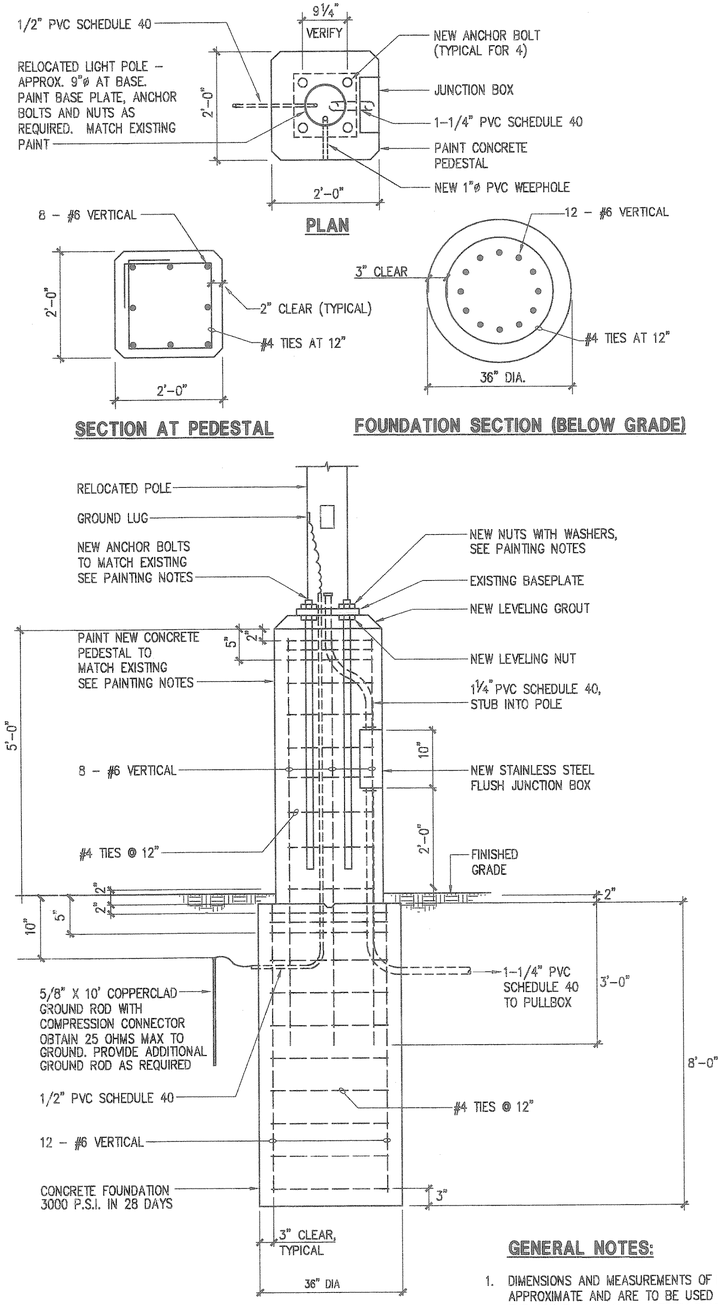

BASE DETAIL

A E-30 RELOCATED FLOOD LIGHT POLE

NOT TO SCALE

PAINTING NOTES:

1. THE CONTRACTOR SHALL PREPARE AND PAINT THE NEW ANCHOR BOLTS, NUTS, JUNCTION BOXES, CONCRETE BASES AND ANY OTHER LIGHT POLE SURFACES WHERE PAINT HAS BEEN LOOSENED AT THE DISCRETION OF THE CONSTRUCTION MANAGER.
2. FINISH PAINT SHALL BE OSHA SAFETY YELLOW. SUBMIT PAINTING MATERIALS FOR APPROVAL IN ACCORDANCE WITH "SUBMITTALS" SECTION OF THE SPECIFICATIONS.
3. ALL SURFACES TO BE PAINTED SHALL BE THOROUGHLY CLEANED OF ALL LOOSE PAINT, GREASE, DIRT, SCALE AND OTHER FOREIGN MATERIAL PRIOR TO PAINTING.
4. METAL SURFACES – PAINT WITH ONE PRIME COAT AT A THICKNESS OF 5 MILS, "AMERILOCK 500 OR APPROVED EQUAL. PAINT WITH ONE FINISH COAT AT A THICKNESS OF 5 MILS "PSX 700" OR APPROVED EQUAL.
5. CONCRETE SURFACES – PAINT WITH ONE PRIME COAT, "ICI PAINT STORES 2000 DECRA–SHIELD EXTERIOR ACRYLIC LATEX PRIMER". PAINT WITH TWO FINISH COATS, "ICI PAINT STORES 2402 DECRA–SHIELD EXTERIOR 100% ACRYLIC SATIN FINISH". TOTAL DRY FILM THICKNESS SHALL BE AT LEAST 6 MILS.
6. THE TIME INTERVAL BETWEEN EACH COAT OF PAINT SHALL BE 24 HOURS. ALL PRIME AND FINISH COATS SHALL BE APPLIED BY BRUSH OR ROLLER. FINISH WORK SHALL BE UNIFORM AND OF APPROVED COLOR. FINISH SHALL COMPLETELY COVER, BE SMOOTH AND FREE FROM RUNS, SAGS, DRIPS, WAVES, LAPS OF BRUSH MARKS. EDGES OF PAINT ADJOINING OTHER SURFACES SHALL BE SHARP AND CLEAN WITHOUT OVERLAPPING.
7. ALL PAINT, OIL, ETC. SHALL BE CLEANED OFF PAVEMENT, FIXTURES OR ANY OTHER SURFACE WHERE PAINT HAS SPLASHED OR BEEN SPILLED.

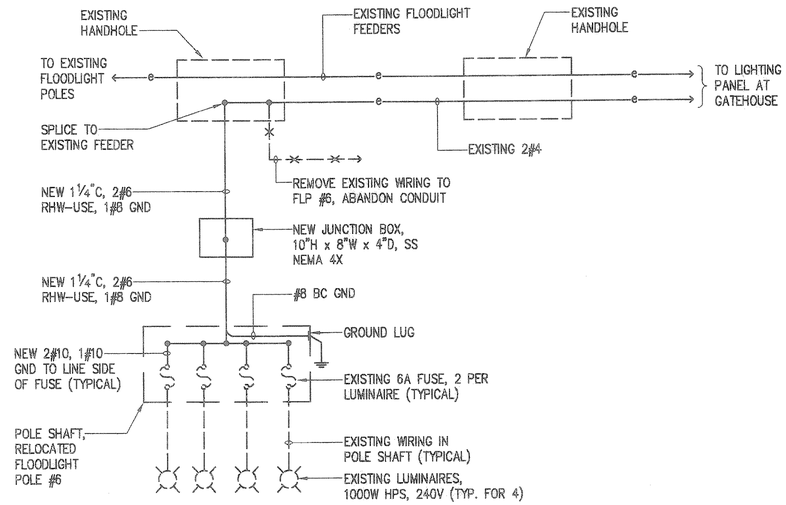

B E-30 FLOODLIGHT POLE 6 CONNECTION DIAGRAM

NO SCALE

GENERAL NOTES:

1. DIMENSIONS AND MEASUREMENTS OF EXISTING LIGHT POLES ARE APPROXIMATE AND ARE TO BE USED FOR REFERENCE ONLY. THE CONTRACTOR SHALL VERIFY DIMENSIONS AND CONDITIONS IN THE FIELD.
2. WORK SHALL BE COORDINATED WITH THE STATE OF HAWAII, DEPARTMENT OF TRANSPORTATION, HARBORS DIVISION.
3. LUMINAIRES SHALL BE OPERATIONAL DURING THE HOURS OF DARKNESS.
4. BEFORE RELOCATING LIGHT POLE, CONTRACTOR SHALL NOTE AND RECORD AIMING POINTS OF THE EXISTING LUMINAIRES. AFTER LIGHT POLE HAS BEEN RELOCATED, ADJUST LUMINAIRES TO MATCH ORIGINAL AIMING POINTS TO THE SATISFACTION OF THE CONSTRUCTION MANAGER AND SDOT HARBORS.

REVISION	DATE	DESCRIPTION	MADE BY	APPROVED

Planning – Engineering – Environmental Services – Photogrammetry – Surveying – Construction Management
R. M. TOWILL CORPORATION
808 842 1133 420 Waiakamilo Road Suite 411 Honolulu Hawaii 96817–4941

VINCENT K. MIYAGAWA * LICENSED PROFESSIONAL ENGINEER No. 4534–E * HAWAII, U.S.A.

THIS WORK WAS PREPARED BY ME OR UNDER MY SUPERVISION.
ECS, INC.
By _____
Its PROJECT ENGINEER
Date JULY 21, 2000

HAWAII COMMUNITY DEVELOPMENT AUTHORITY
STATE OF HAWAII
HONOLULU, HAWAII

KAKA'AKO COMMUNITY DEVELOPMENT DISTRICT
IMPROVEMENT DISTRICT 9
ILALO STREET IMPROVEMENTS

FLOODLIGHT POLE DETAILS-
TMK: 2-1-15:09

ENGINEER: MA
DRAFTSMAN: MO
CHECKED BY: VM
DATE: JULY 21, 2000

EXECUTIVE DIRECTOR, HAWAII COMMUNITY DEVELOPMENT AUTHORITY

FILENAME: 60-32b12

FILE	POCKET	FOLDER	NO.

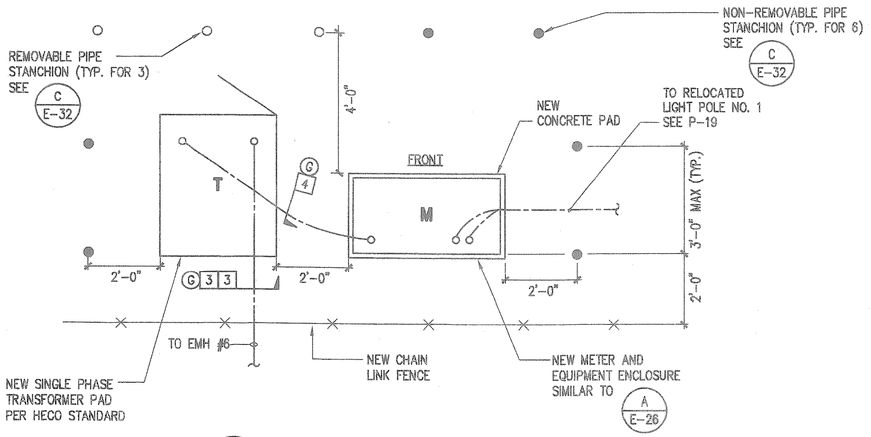

A E-31 EQUIPMENT LAYOUT

SCALE: 1/2" = 1'-0"

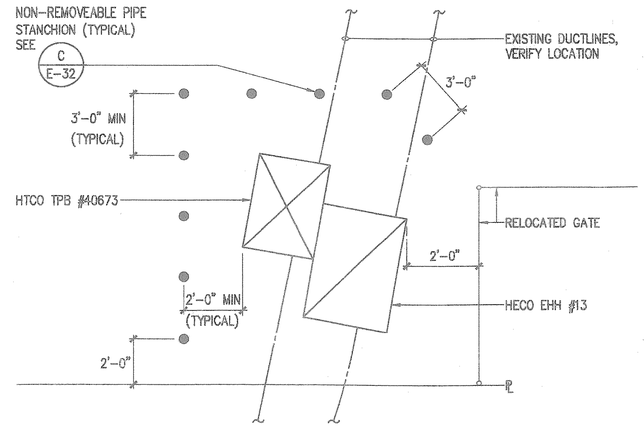

C E-31 HANDHOLE GROUP LAYOUT

NOT TO SCALE

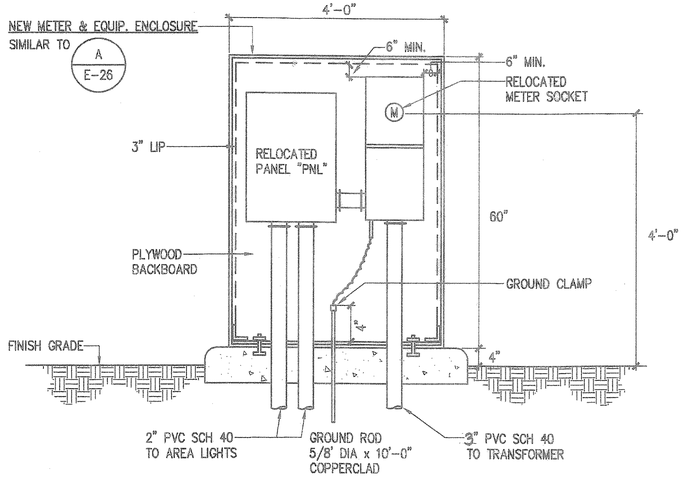

B E-31 SERVICE EQUIPMENT ELEVATION

NOT TO SCALE

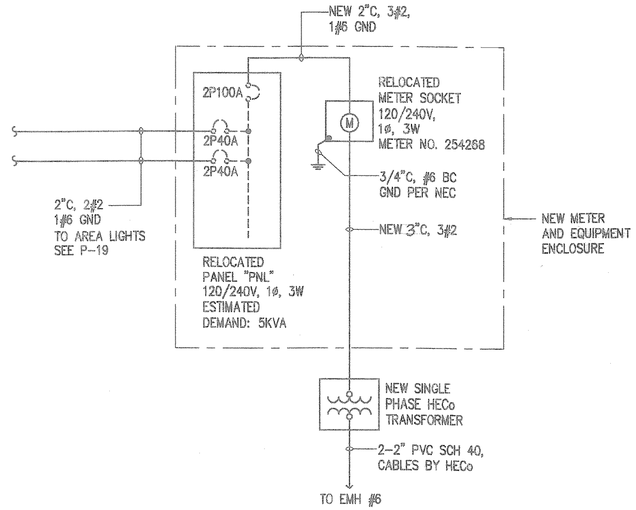

NOTE:

ALL CIRCUIT BREAKERS AT PANEL "PNL" ARE EXISTING. DISTRIBUTE LIGHT POLE CIRCUIT ASSIGNMENTS TO MATCH EXISTING.

D E-31 PARTIAL ONE LINE DIAGRAM

NOT TO SCALE

GENERAL NOTES:

1. DIMENSIONS AND MEASUREMENTS OF EXISTING ARE APPROXIMATE AND ARE TO USED FOR REFERENCE ONLY. CONTRACTOR SHALL VERIFY DIMENSIONS AND CONDITIONS IN THE FIELD.
2. COORDINATE ALL WORK WITH PRODUCE CENTER DEVELOPMENT, LTD.

DRAWING REVIEW

Reviewed for HECO's Facilities Only

Date 8/9/00 By J.K.h

Engineering Department
Hawaiian Electric Company, Inc.

HECO's review of these drawings shall in no way relieve the Customer, its Consultant, its Contractor or anyone acting on the Customer's behalf from the responsibility for engineering, design, materials and any other liability associated with this project.

APPROVED:

HAWAIIAN ELECTRIC COMPANY, INC DATE

GTE/HAWAIIAN TEL 8/7/00 DATE

REVISION	DATE	DESCRIPTION	MADE BY	APPROVED

Planning - Engineering - Environmental Services - Photogrammetry - Surveying - Construction Management
R. M. TOWILL CORPORATION
808 842 1133 420 Waiakamilo Road Suite 411 Honolulu Hawaii 96817-4941

VINCENT K. MIYAGAWA * LICENSED PROFESSIONAL ENGINEER No. 4534-E * HAWAII, U.S.A.

THIS WORK WAS PREPARED BY ME OR UNDER MY SUPERVISION.
ECS, INC.
By
Its PROJECT ENGINEER
Date JULY 21, 2000

HAWAII COMMUNITY DEVELOPMENT AUTHORITY
STATE OF HAWAII
HONOLULU, HAWAII

KAKA'AKO COMMUNITY DEVELOPMENT DISTRICT
IMPROVEMENT DISTRICT 9
ILALO STREET IMPROVEMENTS
MISCELLANEOUS ELECTRICAL DETAILS

ENGINEER: MA CHECKED BY: VM
DRAFTSMAN: MO DATE: JULY 21, 2000
EXECUTIVE DIRECTOR, HAWAII COMMUNITY DEVELOPMENT AUTHORITY

FILENAME: 60-32810

FILE	POCKET	FOLDER	NO.

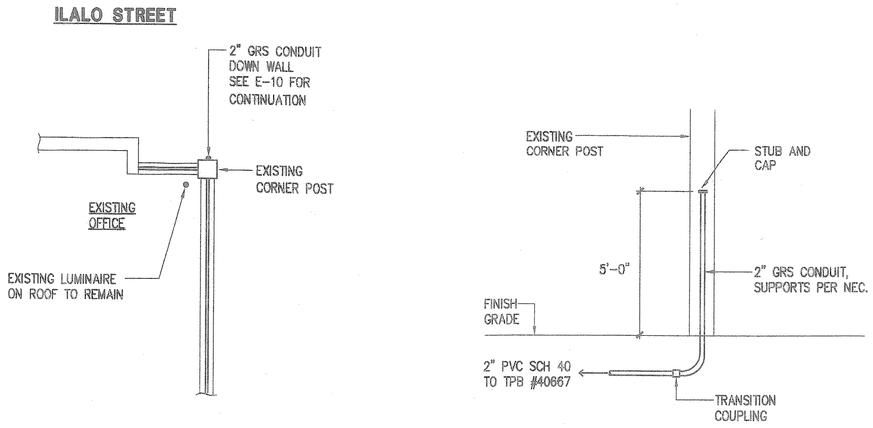

PLAN
SCALE: 1/4" = 1'-0"

ELEVATION
NOT TO SCALE

A / E-32 TELEPHONE SERVICE RECONNECTION - TMK: 2-1-59:11
SCALE: AS NOTED

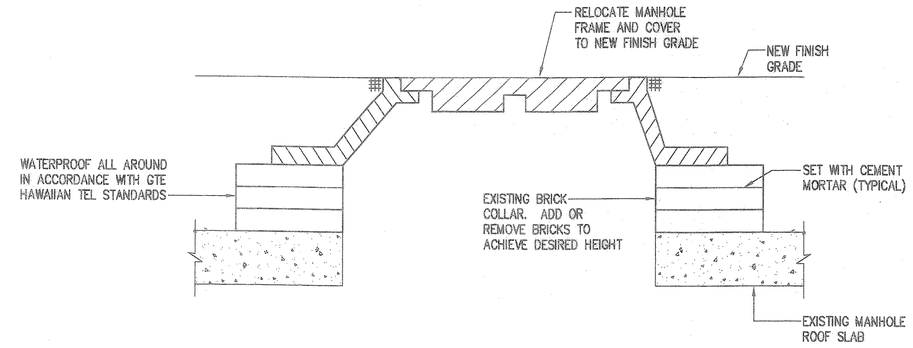

NOTE:
CONTRACTOR SHALL VERIFY EXISTING CONDITIONS.

B / E-32 MANHOLE FRAME AND COVER ADJUSTMENT DETAIL
NOT TO SCALE

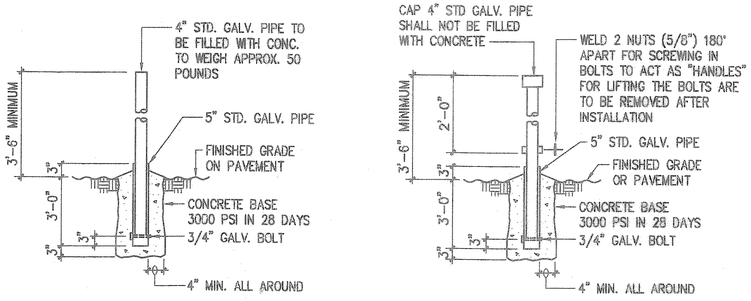

NON-REMOVEABLE **REMOVEABLE**

NOTE:
BARRIER POSTS ARE TO BE PAINTED YELLOW AS PER ANSI SPEC 253.1 TO COMPLY WITH OSHA STANDARDS FOR COLORING CODE.

C / E-32 POST TYPE BARRIER
NOT TO SCALE

DRAWING REVIEW

Reviewed for HECO's Facilities Only
Date 8/9/00 By [signature]
Engineering Department
Hawaiian Electric Company, Inc.

HECO's review of these drawings shall in no way relieve the Customer, its Consultant, its Contractor or anyone acting on the Customer's behalf from the responsibility for engineering, design, materials and any other liability associated with this project.

APPROVED:

HAWAIIAN ELECTRIC COMPANY, INC DATE

GTE HAWAIIAN TEL 8/7/00 DATE

VINCENT K. MIYAGAWA
LICENSED PROFESSIONAL ENGINEER
No. 4534-E
HAWAII, U.S.A.

THIS WORK WAS PREPARED BY ME OR UNDER MY SUPERVISION.
ECS, INC.
By [signature]
Its PROJECT ENGINEER
Date JULY 21, 2000

REVISION	DATE	DESCRIPTION	MADE BY	APPROVED

Planning – Engineering – Environmental Services – Photogrammetry – Surveying – Construction Management
R. M. TOWILL CORPORATION
808 842 1133 420 Waiakamilo Road Suite 411 Honolulu Hawaii 96817-4941

HAWAII COMMUNITY DEVELOPMENT AUTHORITY
STATE OF HAWAII
HONOLULU, HAWAII
KAKA'AKO COMMUNITY DEVELOPMENT DISTRICT
IMPROVEMENT DISTRICT 9
ILALO STREET IMPROVEMENTS
MISCELLANEOUS ELECTRICAL DETAILS

ENGINEER: MA CHECKED BY: VM
DRAFTSMAN: CM DATE: JULY 21, 2000
EXECUTIVE DIRECTOR, HAWAII COMMUNITY DEVELOPMENT AUTHORITY

FILENAME: 60-32B15

"RECORD DRAWINGS" E-32 SHEET 108 OF 140 SHEETS

FILE	POCKET	FOLDER	NO.

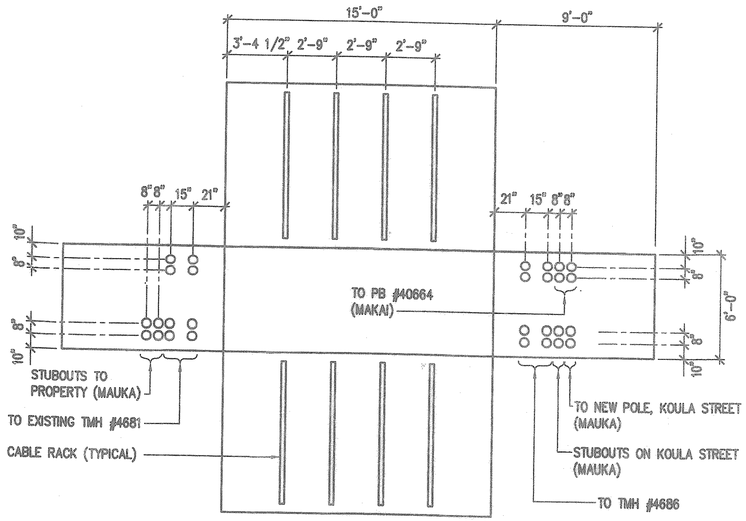

TMH #4685

SCALE: 1/4" = 1'-0"

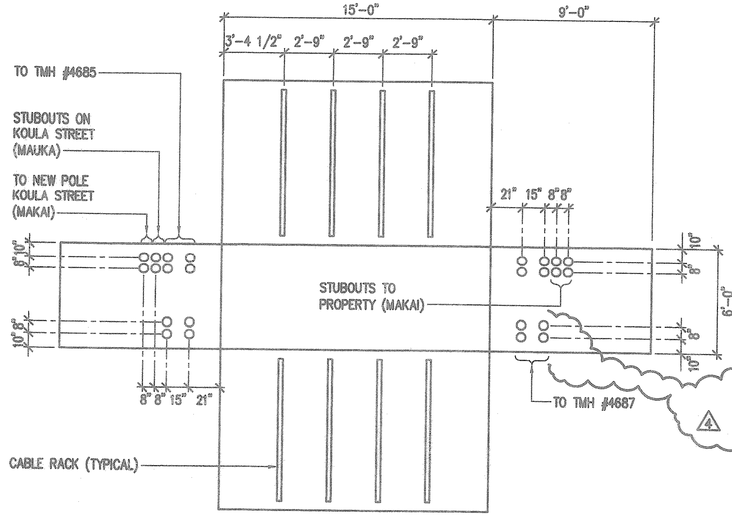

TMH #4686

SCALE: 1/4" = 1'-0"

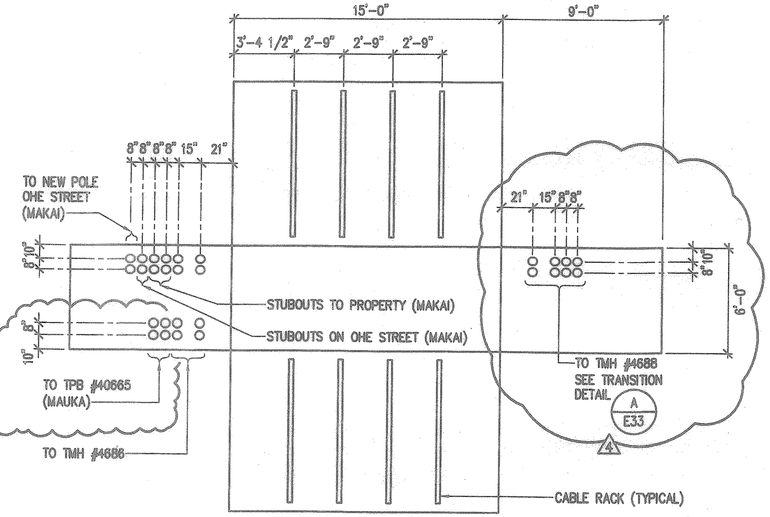

TMH #4687

SCALE: 1/4" = 1'-0"

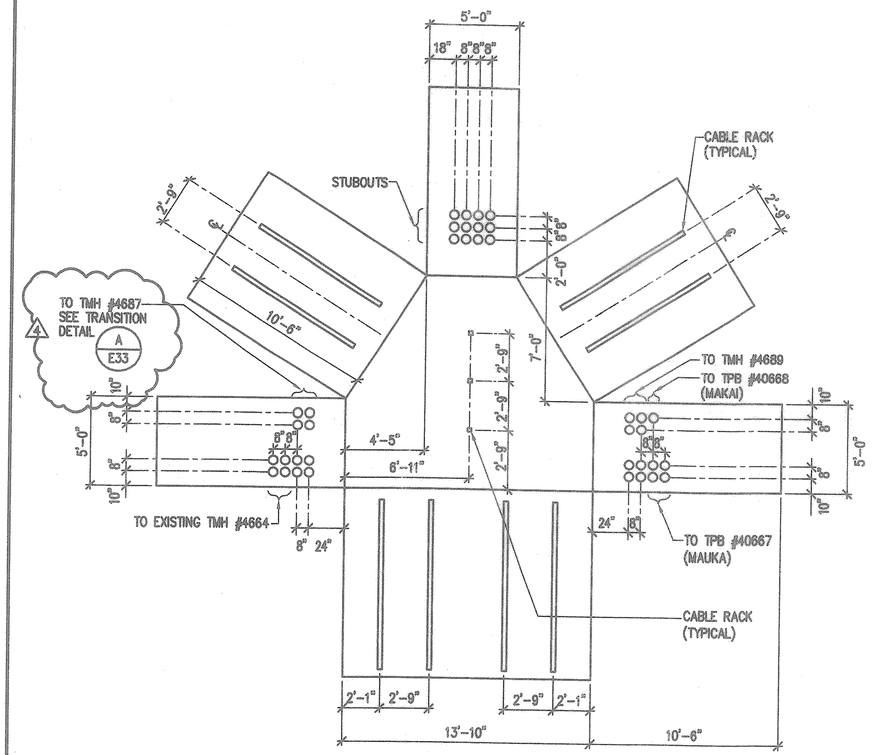

TMH #4688

SCALE: 1/4" = 1'-0"

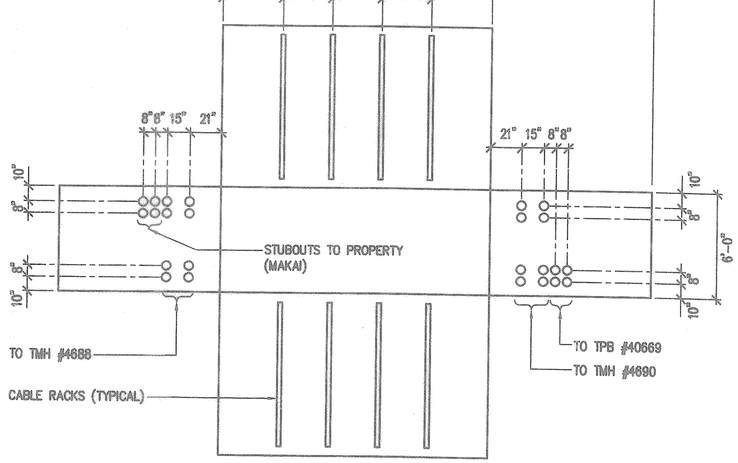

TMH #4689

SCALE: 1/4" = 1'-0"

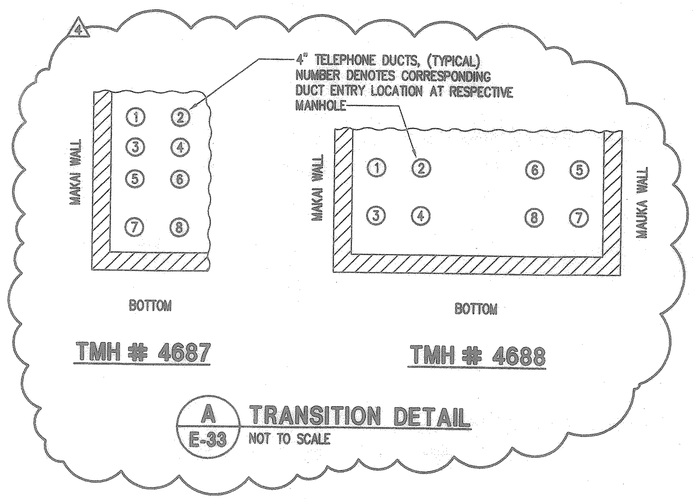

TMH # 4687

TMH # 4688

A / E-33 TRANSITION DETAIL

NOT TO SCALE

APPROVED:

GTE HAWAIIAN TEL — DATE 9/27/01

THIS WORK WAS PREPARED BY ME OR UNDER MY SUPERVISION.
ECS, INC.
By
Its PROJECT ENGINEER
Date JULY 21, 2000

VINCENT K. MIYAGAWA — LICENSED PROFESSIONAL ENGINEER — No. 4634-E — HAWAII, U.S.A.

REVISION	DATE	DESCRIPTION	MADE BY	APPROVED
2	9/19/01	HTCO REVISIONS	MA	
1	1/9/01	NEW SHEET, REPLACES SHEET E-33	MA	

Planning – Engineering – Environmental Services – Photogrammetry – Surveying – Construction Management
R. M. TOWILL CORPORATION
808 842 1133 420 Waiakamilo Road Suite 411 Honolulu Hawaii 96817-4941

HAWAII COMMUNITY DEVELOPMENT AUTHORITY
STATE OF HAWAII
HONOLULU, HAWAII

KAKA'AKO COMMUNITY DEVELOPMENT DISTRICT
IMPROVEMENT DISTRICT 9
ILALO STREET IMPROVEMENTS
TELEPHONE MANHOLE BUTTERFLY LAYOUTS

ENGINEER: MA — CHECKED BY: VM
DRAFTSMAN: RD — DATE: 1/5/01

EXECUTIVE DIRECTOR, HAWAII COMMUNITY DEVELOPMENT AUTHORITY

FILENAME: 60-32b13

"RECORD DRAWINGS" E-33 SHEET 109 OF 140 SHEETS

FILE	POCKET	FOLDER	NO.

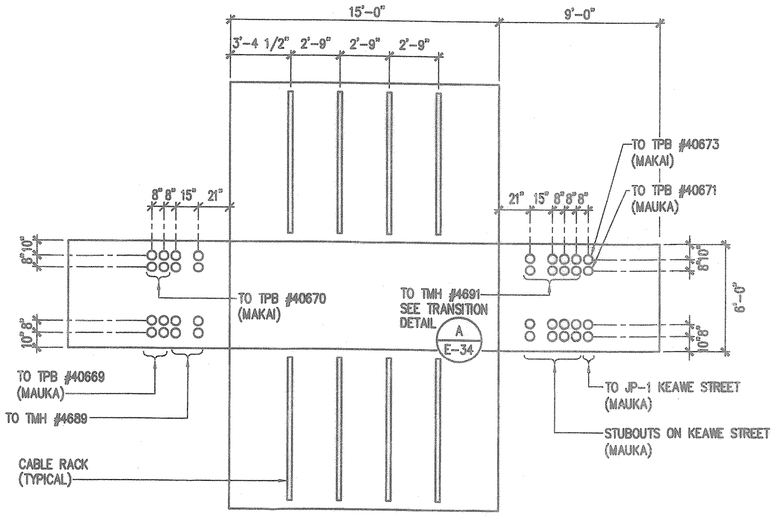

TMH #4690

SCALE: 1/4" = 1'-0"

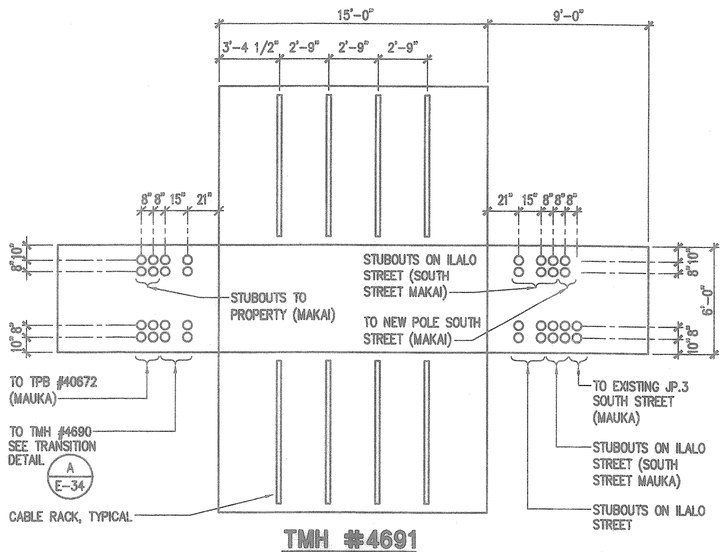

TMH #4691

SCALE: 1/4" = 1'-0"

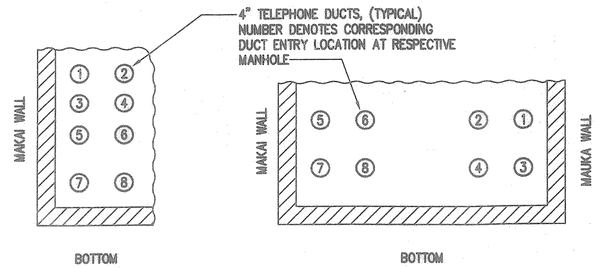

TMH # 4690

TMH # 4691

A E-34 TRANSITION DETAIL

NOT TO SCALE

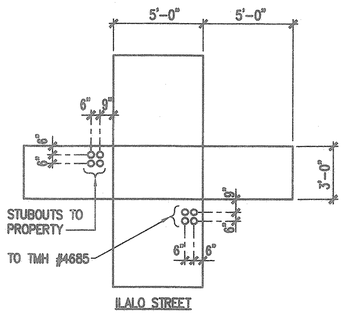

TPB # 40664

SCALE: 1/4" = 1'-0"

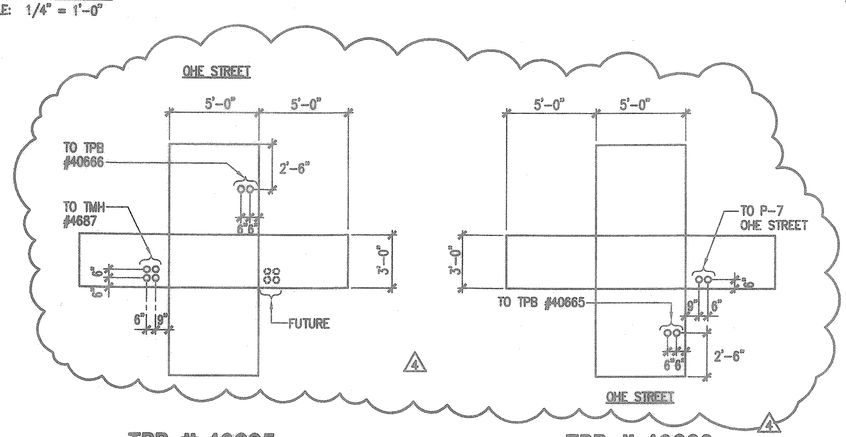

TPB # 40665

SCALE: 1/4" = 1'-0"

TPB # 40666

SCALE: 1/4" = 1'-0"

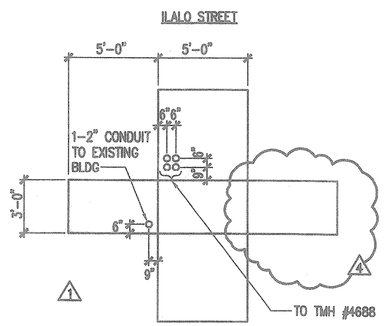

TPB # 40667

SCALE: 1/4" = 1'-0"

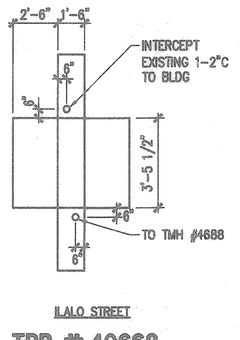

TPB # 40668

SCALE: 1/4" = 1'-0"

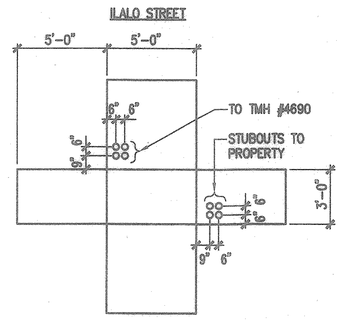

TPB # 40669

SCALE: 1/4" = 1'-0"

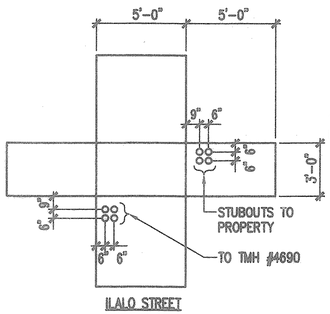

TPB # 40670

SCALE: 1/4" = 1'-0"

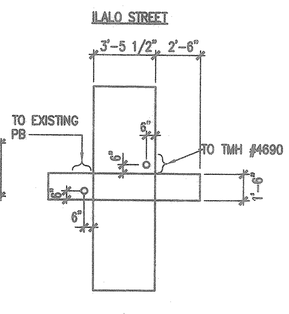

TPB # 40671

SCALE: 1/4" = 1'-0"

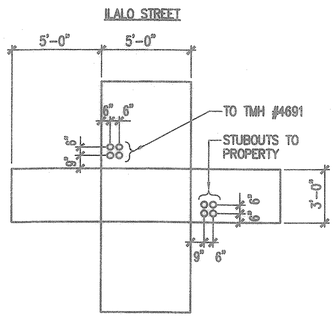

TPB # 40672

SCALE: 1/4" = 1'-0"

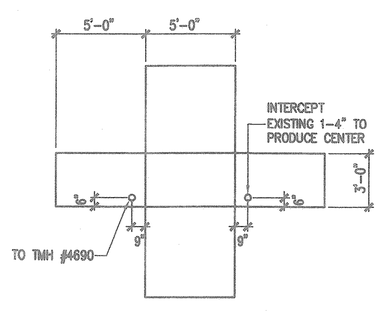

TPB # 40673

SCALE: 1/4" = 1'-0"

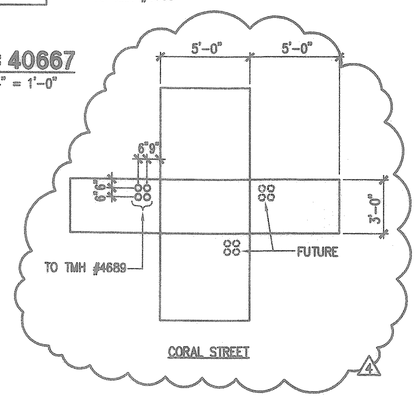

TPB # 40674

SCALE: 1/4" = 1'-0"

APPROVED:

GTE HAWAIIAN TEL — DATE 9/27/01

REVISION	DATE	DESCRIPTION	MADE BY	APPROVED
2	9/19/01	HTCO REVISIONS	MA	
1	1/9/01	NEW SHEET REPLACES SHEET E-34	MA	

R. M. TOWILL CORPORATION
Planning – Engineering – Environmental Services – Photogrammetry – Surveying – Construction Management
808 842 1133 420 Waiakamilo Road Suite 411 Honolulu Hawaii 96817-4941

VINCENT K. MIYAGAWA LICENSED PROFESSIONAL ENGINEER No. 4534-E HAWAII, U.S.A.

THIS WORK WAS PREPARED BY ME OR UNDER MY SUPERVISION.
ECS, INC.
By
Its PROJECT ENGINEER
Date JULY 21, 2000

HAWAII COMMUNITY DEVELOPMENT AUTHORITY
STATE OF HAWAII
HONOLULU, HAWAII
KAKA'AKO COMMUNITY DEVELOPMENT DISTRICT
IMPROVEMENT DISTRICT 9
ILALO STREET IMPROVEMENTS
TELEPHONE MANHOLE BUTTERFLY LAYOUTS

ENGINEER: MA
DRAFTSMAN: RD
CHECKED BY: VM
DATE: 1/5/01

EXECUTIVE DIRECTOR, HAWAII COMMUNITY DEVELOPMENT AUTHORITY

FILENAME: 60-32b14

FILE	POCKET	FOLDER	NO.

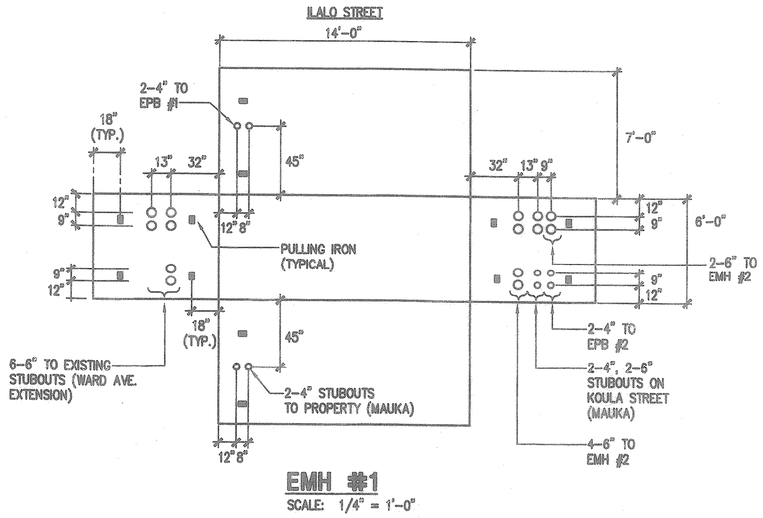

EMH #1

SCALE: 1/4" = 1'-0"

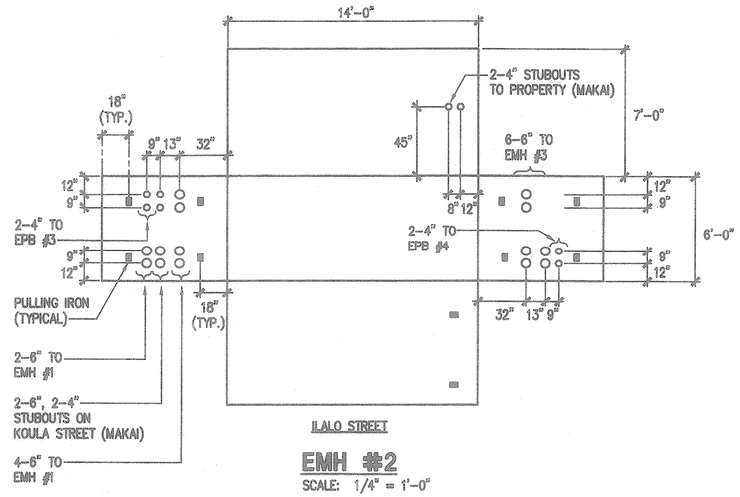

EMH #2

SCALE: 1/4" = 1'-0"

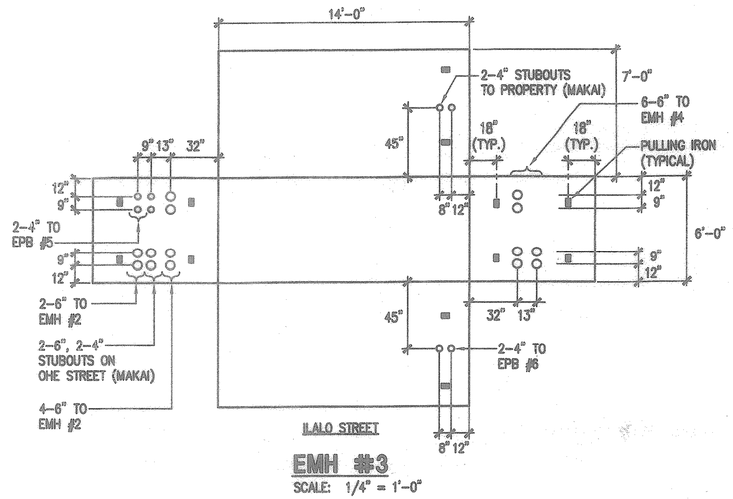

EMH #3

SCALE: 1/4" = 1'-0"

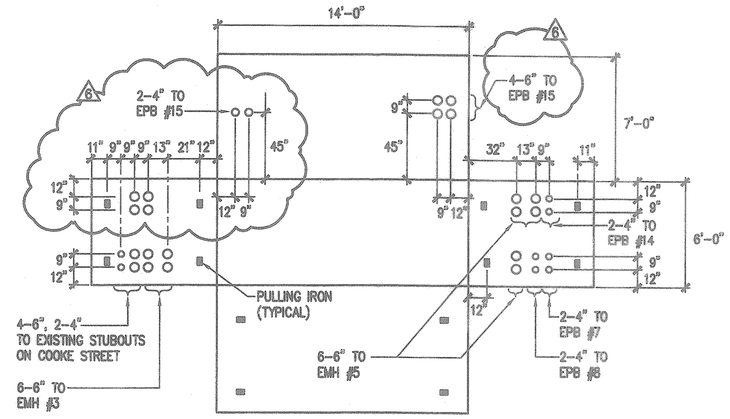

EMH #4

SCALE: 1/4" = 1'-0"

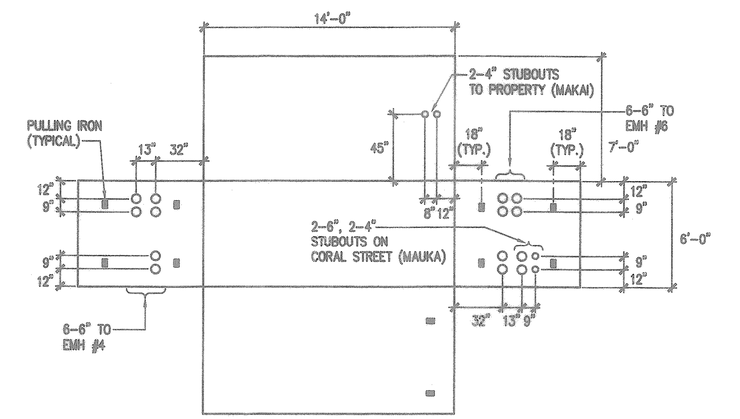

EMH #5

SCALE: 1/4" = 1'-0"

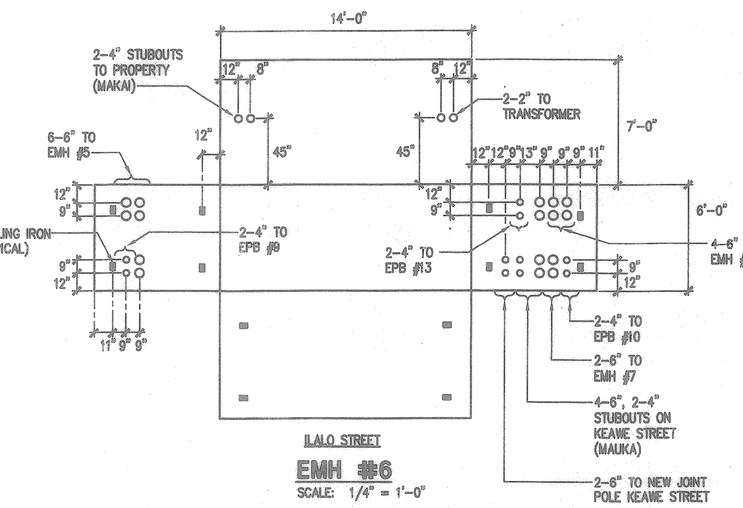

EMH #6

SCALE: 1/4" = 1'-0"

DRAWING REVIEW

Reviewed for HECO's Facilities Only

Date 5/24/02 By

Engineering Department
Hawaiian Electric Company, Inc.

HECO's review of these drawings shall in no way relieve the Customer, its Consultant, its Contractor or anyone acting on the Customer's behalf from the responsibility for engineering, design, materials and any other liability associated with this project.

APPROVED:

HAWAIIAN ELECTRIC COMPANY, INC. DATE

REVISION	DATE	DESCRIPTION	MADE BY	APPROVED
6	4/5/02	REVISED EMH #4 DUCT ENTRIES	MA	

Planning – Engineering – Environmental Services – Photogrammetry – Surveying – Construction Management
R. M. TOWILL CORPORATION
808 842 1133 420 Waiakamilo Road Suite 411 Honolulu Hawaii 96817-4941

VINCENT K. MIYAGAWA LICENSED PROFESSIONAL ENGINEER No. 4634-E HAWAII, U.S.A.

THIS WORK WAS PREPARED BY ME OR UNDER MY SUPERVISION.

By ECS, INC.

Its PROJECT ENGINEER

Date JULY 21, 2000

HAWAII COMMUNITY DEVELOPMENT AUTHORITY
STATE OF HAWAII
HONOLULU, HAWAII

KAKA'AKO COMMUNITY DEVELOPMENT DISTRICT
IMPROVEMENT DISTRICT 9
ILALO STREET IMPROVEMENTS

ELECTRIC MANHOLE BUTTERFLY LAYOUTS

ENGINEER: MA CHECKED BY: VM

DRAFTSMAN: CM DATE: 1/5/01

EXECUTIVE DIRECTOR, HAWAII COMMUNITY DEVELOPMENT AUTHORITY

FILE	POCKET	FOLDER	NO.

5/21/02-14:27 Y:\060\e60-32\60-32B17.dwg

"RECORD DRAWINGS" E-35 SHEET 111 OF 140 SHEETS

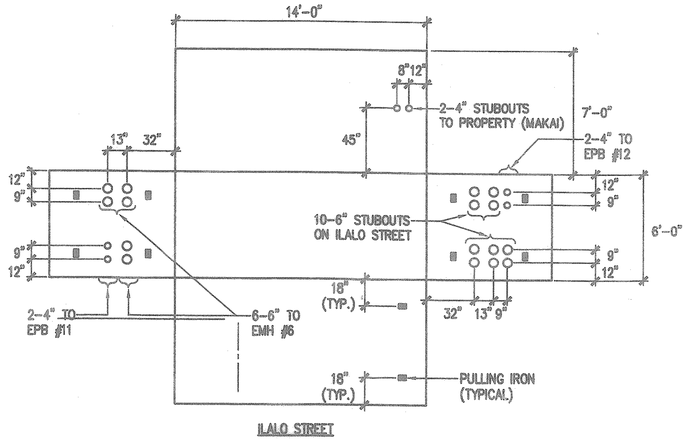

EMH #7

SCALE: 1/4" = 1'-0"

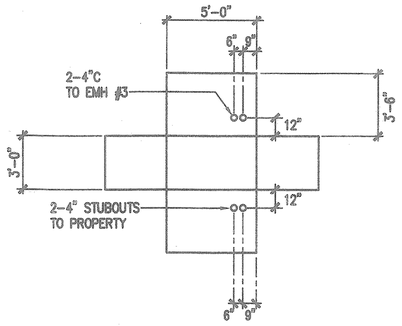

NOTE:
EPB #11 SIMILAR.

EPB # 6

SCALE: 1/4" = 1'-0"

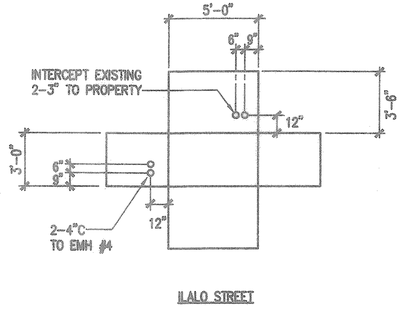

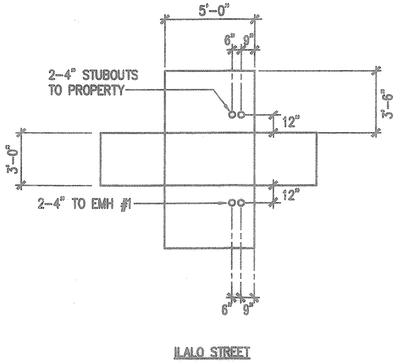

EPB # 1

SCALE: 1/4" = 1'-0"

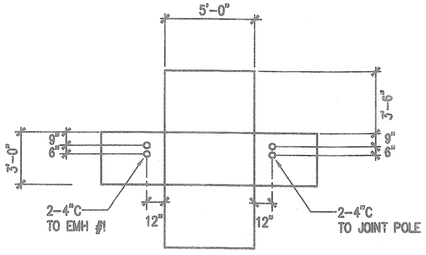

EPB # 2

SCALE: 1/4" = 1'-0"

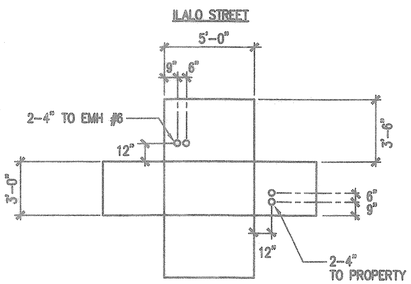

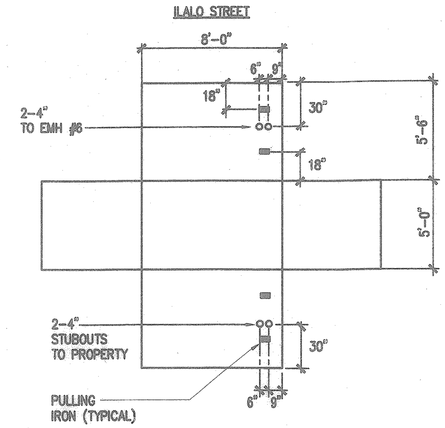

NOTE:
EPB #8, EPB #9 SIMILAR.

EPB # 4

SCALE: 1/4" = 1'-0"

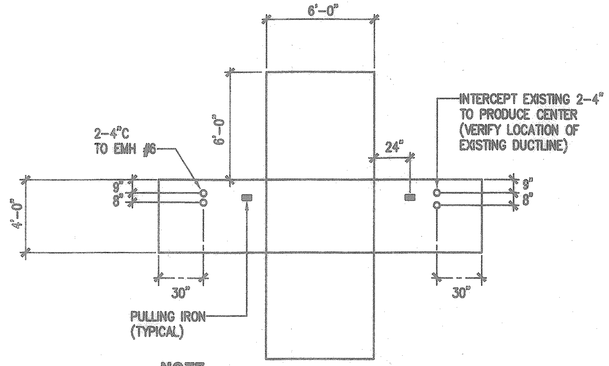

NOTE:
EPB #14 SIMILAR.

EPB # 13

SCALE: 1/4" = 1'-0"

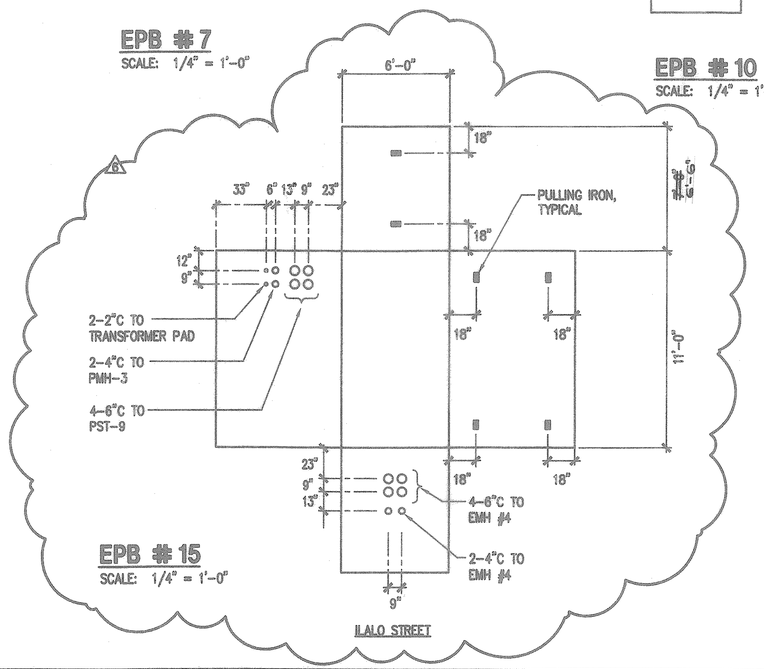

EPB # 15

SCALE: 1/4" = 1'-0"

EPB # 7

SCALE: 1/4" = 1'-0"

EPB # 10

SCALE: 1/4" = 1'-0"

DRAWING REVIEW

Reviewed for HECO's Facilities Only

Date 5/24/02 By

Engineering Department
Hawaiian Electric Company, Inc.

HECO's review of these drawings shall in no way relieve the Customer, its Consultant, its Contractor or anyone acting on the Customer's behalf from the responsibility for engineering, design, materials and any other liability associated with this project.

APPROVED:

HAWAIIAN ELECTRIC COMPANY, INC. DATE

REVISION	DATE	DESCRIPTION	MADE BY	APPROVED
6	4/5/02	ADDED EPB #15	MA	
4	9/19/01	HECO REVISIONS	MA	

Planning - Engineering - Environmental Services - Photogrammetry - Surveying - Construction Management
R. M. TOWILL CORPORATION
808 842 1133 420 Waiakamilo Road Suite 411 Honolulu Hawaii 96817-4941

VINCENT K. MIYAGAWA LICENSED PROFESSIONAL ENGINEER No. 4634-E HAWAII, U.S.A.

THIS WORK WAS PREPARED BY ME OR UNDER MY SUPERVISION.

ECS, INC.

By

Its PROJECT ENGINEER

Date JULY 21, 2000

HAWAII COMMUNITY DEVELOPMENT AUTHORITY
STATE OF HAWAII
HONOLULU, HAWAII

KAKA'AKO COMMUNITY DEVELOPMENT DISTRICT
IMPROVEMENT DISTRICT 9
ILALO STREET IMPROVEMENTS

ELECTRIC MANHOLE BUTTERFLY LAYOUTS

ENGINEER: MA CHECKED BY: VM

DRAFTSMAN: CM DATE: 1/5/01

EXECUTIVE DIRECTOR, HAWAII COMMUNITY DEVELOPMENT AUTHORITY

FILE	POCKET	FOLDER	NO.

5/21/02-14:06 Y:\060\e60-32\60-32B16.dwg

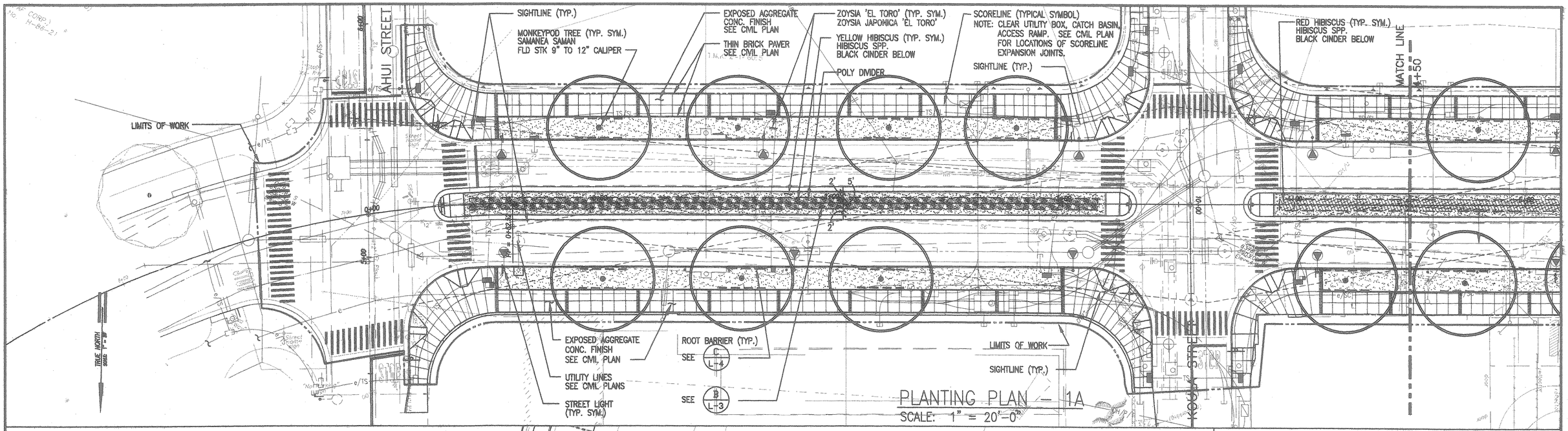

PLANTING PLAN – 1A
SCALE: 1" = 20'-0"

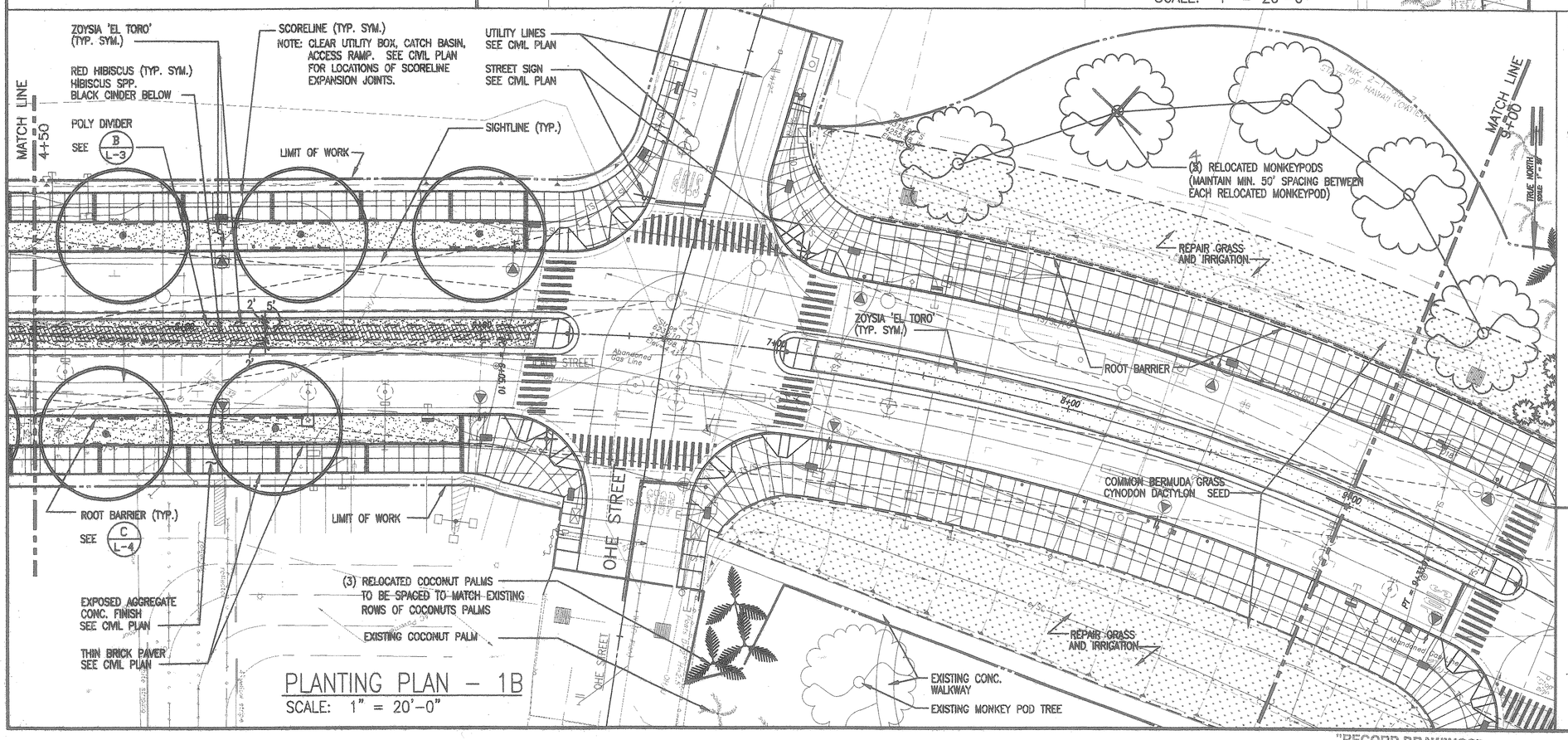

PLANTING PLAN – 1B
SCALE: 1" = 20'-0"

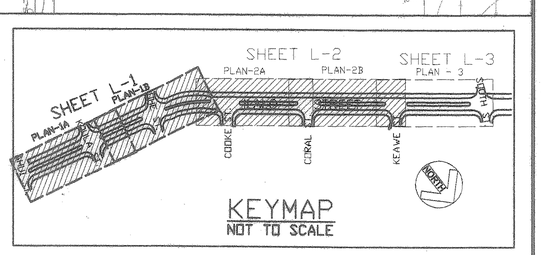

KEYMAP
NOT TO SCALE

RECORD DOCUMENTS

These Record Documents have been prepared based on information provided by others. Lester H. Inouye & Associates Inc. has not verified the accuracy and/or completeness of this information and shall not be responsible for any errors or omissions which may be incorporated herein as a result.

Date: 2/29/03

APPROVED BY:

Chief, Urban Design Branch, DPP — Date
(for Street Trees Only, Sheets L-1 to L-4R)
(MEDIAN LANDSCAPING AND IRRIGATION TO BE MAINTAINED BY HCDA.)

REVISION	DATE	DESCRIPTION	MADE BY	APPROVED
4	5/30/01	Revised sidewalk planter and paver layout. Added one Monkeypod. This sheet supersedes L-1.	MM	LH

R. M. TOWILL CORPORATION
808 842 1133 420 Waiakamilo Road Suite 411 Honolulu Hawaii 96817-4941
Planning – Engineering – Environmental Services – Photogrammetry – Surveying – Construction Management

LESTER H. INOUYE LICENSED PROFESSIONAL LANDSCAPE ARCHITECT No. 5530 HAWAII, U.S.A.

THIS WORK WAS PREPARED BY ME OR UNDER MY SUPERVISION.

7-6-01

HAWAII COMMUNITY DEVELOPMENT AUTHORITY
STATE OF HAWAII
HONOLULU, HAWAII
KAKA'AKO COMMUNITY DEVELOPMENT DISTRICT
IMPROVEMENT DISTRICT 9
ILALO STREET IMPROVEMENTS

LANDSCAPE PLAN – 1
0+00 TO 4+50 / 4+50 TO 9+00

LANDSCAPE ARCHITECT: LI
DRAFTSMAN: MM — DATE: 07/06/01

EXECUTIVE DIRECTOR, HAWAII COMMUNITY DEVELOPMENT AUTHORITY

ILALO STREET IMPROVEMENTS; KAKAAKO COMMUNITY DEVELOPMENT DISTRICT; TMK: 2-1-15, 2-1-59, & 2-1-60; DPP Ref. No. S419119-7

"RECORD DRAWINGS" L-1R SHEET 113 OF 140 SHEETS

FILE	POCKET	FOLDER	NO.

RELOCATED MONKEYPOD (TYPICAL SYMBOL)
(SEE L-1)
ROOT BARRIER (TYP. SYM.)
UPRIGHT BOTTLEBRUSH TREE (TYP. SYM.)
CALLISTEMON LANCEOLATUS
25 GAL. HONG KONG ORCHID
MONKEYPOD TREE (TYP. SYM.)
SAMANEA SAMAN
FLD. STK. 9" TO 12" CALIPER
LIMITS OF WORK
ZOYSIA 'EL TORO' (TYP. SYM.)
ZOYSIA JAPONICA 'EL TORO'
RED HIBISCUS
HIBISCUS SPP.
BLACK CINDER BELOW
(TYP.)
POLY DIVIDER
SEE B L-3
MATCH LINE 9+00
MATCH LINE 13+00
EXISTING DRIVEWAY
MATCH LINE SEE INSERT
10+00
COOKE STREET
CORAL STREET
REPAIR GRASS AND IRRIGATION
STREET LIGHT (TYP. SYM.)
UTILITY LINES SEE CIVIL PLANS
UPRIGHT BOTTLEBRUSH TREE (TYP. SYM.)
HONG KONG ORCHID
EXPOSED AGGRIGATE CONC. FINISH SEE CIVIL PLAN
ROOT BARRIER (TYP.)
SEE C L-4
SCORELINE (TYPICAL SYMBOL)
NOTE: CLEAR UTILITY BOX, CATCH BASIN ACCESS RAMP. SEE CIVIL PLAN FOR LOCATIONS OF SCORELINES & EXPANSION JOINT.
LIMITS OF WORK
COMMON BERMUDA GRASS (TYP. SYM.)
SIGHTLINE (TYP.)
ZOYSIA 'EL TORO' (TYP. SYM.)
COMMON BERMUDA GRASS
CYNODON DACTYLON
(TYP. SYM.)
TRUE NORTH
SCALE: 1" = 20'

PLANTING PLAN – 2A
SCALE: 1" = 20'-0"

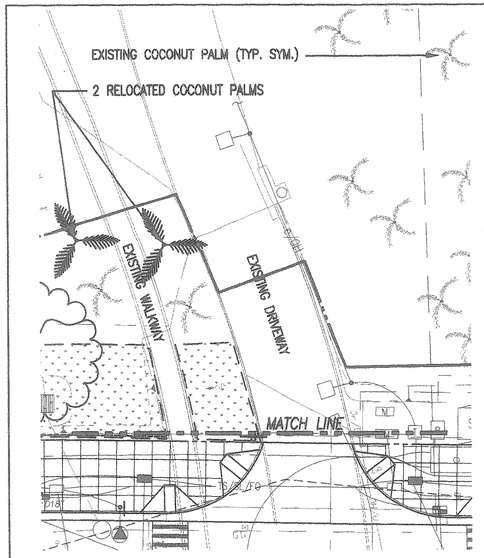

INSERT
SCALE: 1" = 20'-0"

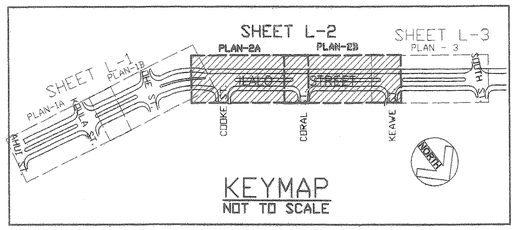

KEYMAP
NOT TO SCALE

ZOYSIA 'EL TORO' (TYP. SYM.)
ZOYSIA JAPONICA
RED HIBISCUS (TYP. SYM.)
HIBISCUS SPP.
BLACK CINDER BELOW
POLY DIVIDER
MONKEYPOD TREE (TYP. SYM.)
SAMANEA SAMAN
FLD. STK. 9" TO 12" CALIPER
EXPOSED AGGRIGATE CONC. FINISH SEE CIVIL PLAN
THIN BRICK PAVER (TYP.)
SEE CIVIL PLAN
LIMITS OF WORK
SIGHTLINE (TYP.)
HAOLE KOU (TYP. SYM.)
CORDIA SEBESTENA
25 GAL.
SEE C L-4
MATCH LINE 13+00
MATCH LINE 16+90
14+00
CORAL STREET
KEAWE STREET
EXPOSED AGGRIGATE CONC. FINISH SEE CIVIL PLAN
SCORELINE (TYPICAL SYMBOL)
NOTE: CLEAR UTILITY BOX, CATCH BASIN ACCESS RAMP. SEE CIVIL PLAN FOR LOCATIONS OF SCORELINES & EXPANSION JOINT.
YELLOW HIBISCUS (TYP. SYM.)
HIBISCUS SPP.
BLACK CINDER BELOW
SEE B L-3
LIMITS OF WORK
ROOT BARRIER (TYP.)
SEE C L-4
COMMON BERMUDA GRASS
CYNODON DACTYLON (TYP. SYM.)
SIGHTLINE (TYP.)
TRUE NORTH
SCALE: 1" = 20'

PLANTING PLAN – 2B
SCALE: 1" = 20'-0"

APPROVED BY:

Chief, Urban Design Branch, DPP — Date
(for Street Trees Only, Sheets L-1 to L-4)
(MEDIAN LANDSCAPING AND IRRIGATION TO BE MAINTAINED BY HCDA.)

RECORD DOCUMENTS

These Record Documents have been prepared based on information provided by others. Lester H. Inouye & Associates has not verified the accuracy and/or completeness of this information and shall not be responsible for any errors or omissions which may be incorporated herein as a result.

Date: 7/24/03

REVISION	DATE	DESCRIPTION	MADE BY	APPROVED
1	5/30/01	Revised sidewalk planter and power layout. This sheet supersedes L-2.	MM	LHI

R. M. TOWILL CORPORATION
808 842 1133 420 Waiakamilo Road Suite 411 Honolulu Hawaii 96817-4941
Planning – Engineering – Environmental Services – Photogrammetry – Surveying – Construction Management

HAWAII COMMUNITY DEVELOPMENT AUTHORITY
STATE OF HAWAII
HONOLULU, HAWAII
KAKA'AKO COMMUNITY DEVELOPMENT DISTRICT
IMPROVEMENT DISTRICT 9
ILALO STREET IMPROVEMENTS

LANDSCAPE PLAN – 2
9+00 TO 13+00 / 13+00 TO 16+90

LESTER H. INOUYE
LICENSED PROFESSIONAL LANDSCAPE ARCHITECT
No. 5530
HAWAII, U.S.A.

THIS WORK WAS PREPARED BY ME OR UNDER MY SUPERVISION.
7-6-01

LANDSCAPE ARCHITECT: LHI
DRAFTSMAN: RE/MM
DATE: 05/30/01

EXECUTIVE DIRECTOR, HAWAII COMMUNITY DEVELOPMENT AUTHORITY

FILE	POCKET	FOLDER	NO.

"RECORD DRAWINGS" L-2R

ILALO STREET IMPROVEMENTS; KAKAAKO COMMUNITY DEVELOPMENT DISTRICT; TMK: 2-1-15, 2-1-59, & 2-1-60; DPP Ref. No. S419119-7

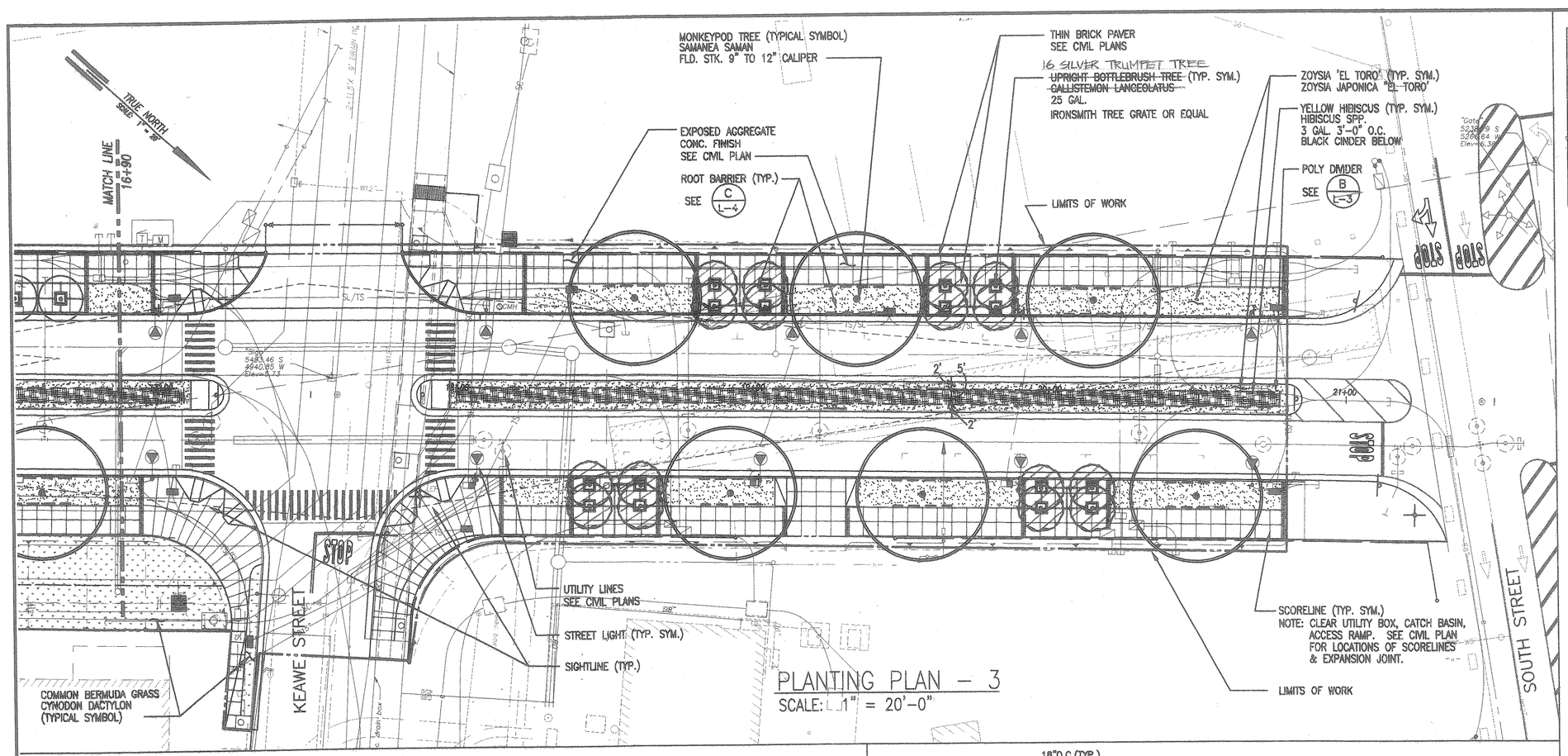

PLANTING PLAN – 3
SCALE: 1" = 20'–0"

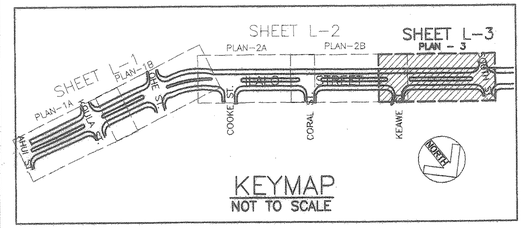

KEYMAP
NOT TO SCALE

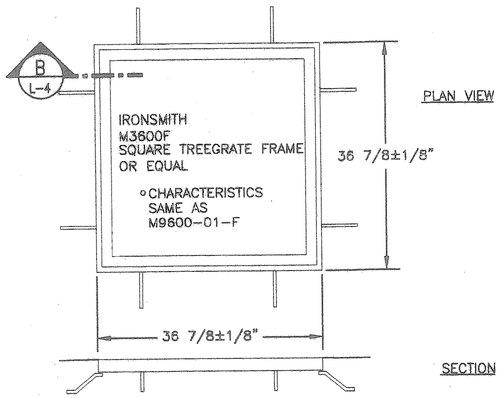

A/L-3 TREE GRATE FRAME DETAILS
NOT TO SCALE

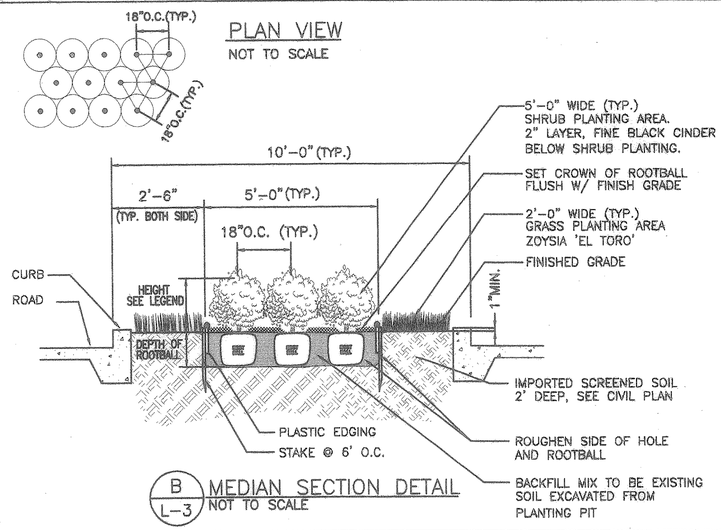

B/L-3 MEDIAN SECTION DETAIL
NOT TO SCALE

APPROVED BY:

Chief, Urban Design Branch, DPP — Date
(for Street Trees Only, Sheets L-1 to L-4)
(MEDIAN LANDSCAPING AND IRRIGATION TO BE MAINTAINED BY HCDA.)

RECORD DOCUMENTS
These Record Documents have been prepared based on information provided by others. Lester H. Inouye & Associates Inc. has not verified the accuracy and/or completeness of this information and shall not be responsible for any errors or omissions which may be incorporated herein as a result.
Date 3/29/03

REVISION	DATE	DESCRIPTION	MADE BY	APPROVED
4	5/30/01	Revised sidewalk planter and paver layout. This sheet supercends L-3.	MM	LHI

Planning – Engineering – Environmental Services – Photogrammetry – Surveying – Construction Management
R. M. TOWILL CORPORATION
808 842 1133 420 Waiakamilo Road Suite 411 Honolulu Hawaii 96817-4941

LESTER H. INOUYE LICENSED PROFESSIONAL LANDSCAPE ARCHITECT No. 5330 HAWAII, U.S.A.
THIS WORK WAS PREPARED BY ME OR UNDER MY SUPERVISION.
7-6-01

HAWAII COMMUNITY DEVELOPMENT AUTHORITY
STATE OF HAWAII
HONOLULU, HAWAII
KAKA'AKO COMMUNITY DEVELOPMENT DISTRICT
IMPROVEMENT DISTRICT 9
ILALO STREET IMPROVEMENTS
LANDSCAPE PLAN – 3
16+90 TO 21+45.86
MOUND & TREE GRATE INSTALLATION DETAILS

LANDSCAPE ARCHITECT: LI
DRAFTSMAN: REM
DATE: 05/30/01

EXECUTIVE DIRECTOR, HAWAII COMMUNITY DEVELOPMENT AUTHORITY

ILALO STREET IMPROVEMENTS; KAKAAKO COMMUNITY DEVELOPMENT DISTRICT; TMK: 2-1-15, 2-1-59, & 2-1-60; DPP Ref. No. S419119-7

FILE	POCKET	FOLDER	NO.

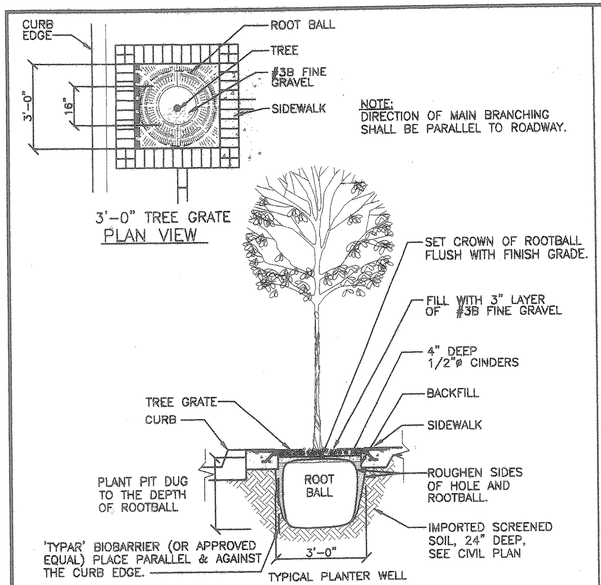

A L-4 STREET TREE PLANTING DETAIL
NOT TO SCALE

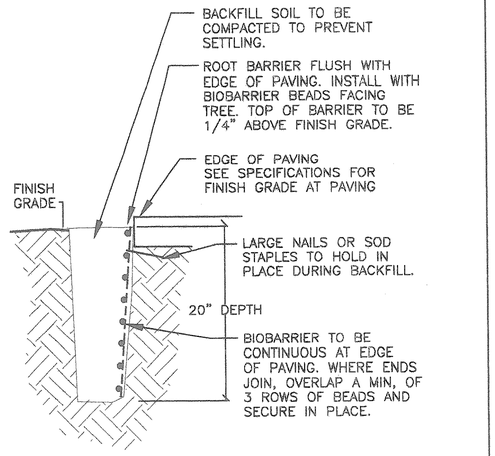

D L-4 ROOT BARRIER INSTALLATION DETAIL
NOT TO SCALE

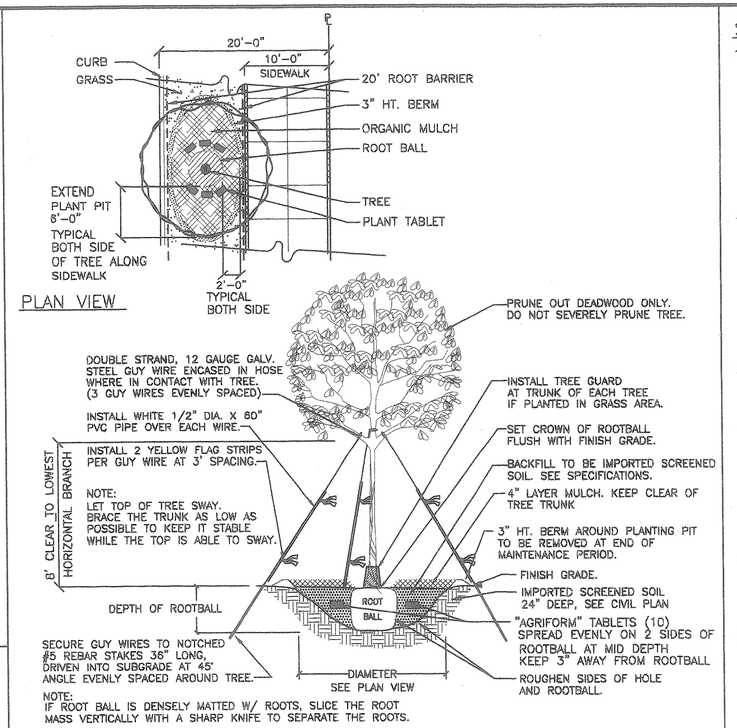

G L-4 TREE GUYING DETAIL FOR 10' WIDE PLANTER
NOT TO SCALE

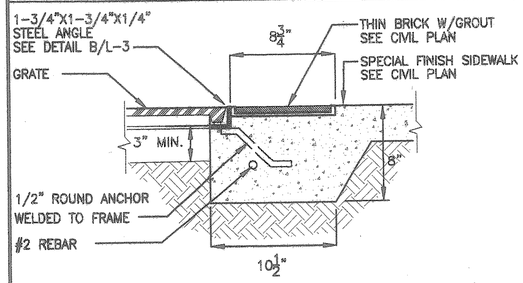

B L-4 TREE GRATE SECTION DETAIL
NOT TO SCALE

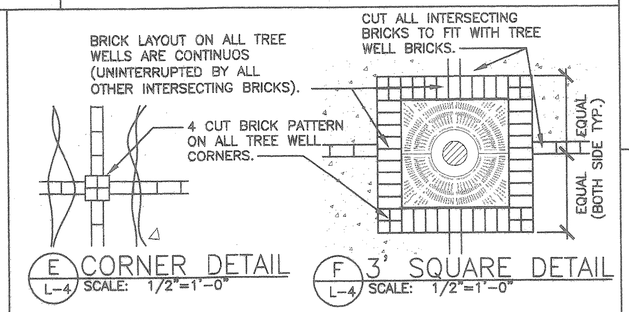

E L-4 CORNER DETAIL
SCALE: 1/2"=1'-0"

F L-4 3' SQUARE DETAIL
SCALE: 1/2"=1'-0"

TYPICAL TREE WELL BRICK LAYOUT DETAILS

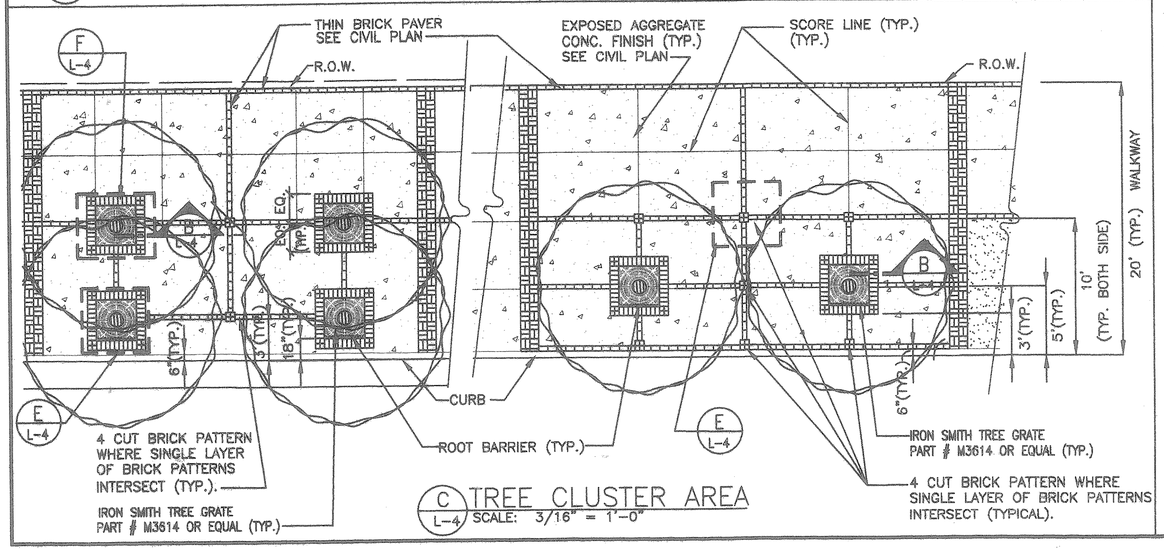

C L-4 TREE CLUSTER AREA
SCALE: 3/16" = 1'-0"

PLANTING MATERIALS LEGEND

QTY.	COMMON NAME	BOTANICAL NAME	REMARKS
Trees			
31	MONKEYPOD TREE	Samanea saman	Field stock 9" to 12" Caliper 8' spread, 15' to 20' ht.
12	HAOLE KOU	Cordia sebestena	25 gal. 8' ht. min. 1" TO 2" Caliper (SEE DETAIL A THIS SHEET)
~~8~~	SILVER TRUMPET TREE		
~~26~~	UPRIGHT BOTTLEBRUSH	~~Callistemon lanceolatus~~	25 gal. 8' ht. min. 1" TO 2" Caliper
16	HONG KONG ORCHID		(SEE DETAIL A THIS SHEET)
Shrub			
1,105	RED HIBISCUS	Hibiscus spp.	1 gal. can, 12"–18" height, 12" spread, @ 18" O.C. Spacing Maintain at 24" max. ht.
1,925	YELLOW HIBISCUS	Hibiscus spp.	1 gal. can, 12"–18" height, 12" spread, @ 18" O.C. Spacing Maintain at 24" max. ht.
Groundcovers			
±24,260 S.F.	ZOYSIA 'EL TORO'	Zoysia japonica "El Toro'	SOD
±31,050 S.F.	COMMON BERMUDA GRASS	Cynodon dactylon	hulled seed, 2lb/1,000 s.f.

MISCELLANEOUS MATERIALS QTY.	DESCRIPTION	REMARKS
±1,600 L.F.	"TYPAR" ROOT BARRIER	
±2,750 L.F.	POLY DIVIDER	
±41 C.Y.	"FINE" BLACK CINDER, 1/4"–3/8" size	2" layer under Hibiscus within Median
38	TREE GRATE	(IRONSMITH 3' X 3', as specified, or equal)

Note:
Quantities indicated on the Plant Legend are approximate.
Planting Plans shall have precedence over the Plant Legend.
Contractor to furnish adequate quantities to complete work shown on the Planting Plans.

STREET TREE NOTES

1. UPON INSTALLATION OF THE STREET TREES, THE INSTALLER/CONTRACTOR SHALL CONTRACT THE BEAUTIFICATION ADMINISTRATOR, DEPARTMENT OF PARKS AND RECREATION (DPR), AT 971–7151 TO SCHEDULE AN INSPECTION OF THE TREE(S) INSTALLATION. NOTIFICATION MUST BE GIVEN AT LEAST SEVEN (7) DAYS PRIOR TO PRE–MAINTENANCE AND FINAL INSPECTIONS. A NOTICE OF ACCEPTANCE WILL BE ISSUED BY THE BEAUTIFICATION ADMINISTRATOR WHEN HE HAS DETERMINED THE TREES HAVE BEEN PROPERLY INSTALLED AND MAINTAINED.
2. THE HCDA SHALL MAINTAIN ALL TREES AND PLANTINGS FOR A MINIMUM OF TWO (2) YEARS AFTER FINAL INSPECTION BY THE DEPARTMENT OF PARKS AND RECREATION. SUBSEQUENT TO THIS TWO YEAR MAINTENANCE PERIOD THE DEPARTMENT OF PARKS AND RECREATION SHALL TRIM THE TREES WITHIN THE PROPOSED CITY RIGHT OF WAY. THE ADJOINING PARCEL OWNERS SHALL BE RESPONSIBLE TO MAINTAIN THE GROUND PLAIN (INCLUDING SHRUBS AND GROUNDCOVER) AND PAY FOR WATER AND/OR ELECTRICITY ASSOCIATED WITHIN THE IRRIGATION AND MAINTENANCE OF ALL LANDSCAPING.
3. THE STANDARD CITY AND COUNTY OF HONOLULU, DEPARTMENT OF PARKS AND RECREATION SPECIFICATIONS FOR STREET TREE PLANTING AND LANDSCAPING SHALL BE MADE PART OF THE CONSTRUCTION.
4. STREET TREE PLANS THAT HAVE BEEN REVISED OR PROJECTS THAT HAVEN'T STARTED CONSTRUCTION WITHIN TWO (2) YEARS OF THE DATE OF THE DEPARTMENT OF PLANNING AND PERMITTING (DPP)'S APPROVAL WILL BE SUBJECT TO RE–APPROVAL. WHEN SUBSTITUTION OF TREE TYPES ARE REQUESTED BY THE DEVELOPER OR CONTRACTOR DUE TO UNAVAILABILITY, THE PLANS SHALL BE REVISED (AFTER NOTIFICATION OF TREE SELECTION) AND (THE PLANS) SUBMITTED FOR RE–APPROVAL.
5. UPON ACCEPTANCE OF THE TREE INSTALLATION BY THE BEAUTIFICATION ADMINISTRATOR, THE STREET TREE INSTALLER IS REQUIRED TO SUBMIT REPRODUCIBLE AS–BUILT PLANS TO THE DEPARTMENT OF PLANNING AND PERMITTING (ATTENTION: CHIEF, URBAN DESIGN BRANCH).
6. APPROVAL IS FOR STREET TREE PLANTING WITHIN THE ROAD RIGHT–OF–WAY ONLY. IT IS NOT AN APPROVAL OF THE PLANTING AND IRRIGATION PLAN OUTSIDE OF THE ROAD RIGHT–OF–WAY.

RECORD DOCUMENTS
These Record Documents have been prepared based on information provided by others. Lester H. Inouye & Associates Inc. has not verified the accuracy and/or completeness of this information and shall not be responsible for any errors or omissions which may be incorporated herein as a result.
Date: 2/24/03

APPROVED BY:
Pat Bisquera 8/29/01
Chief, Urban Design Branch, DPP Date
(for Street Trees Only. Sheets L–1 to L–4)
(MEDIAN LANDSCAPING AND IRRIGATION TO BE MAINTAINED BY HCDA.)

REVISION	DATE	DESCRIPTION	MADE BY	APPROVED
4	5/30/03	Revised sidewalk planter and paver layout. This sheet supercedes L–4.	MM	LHI

R. M. TOWILL CORPORATION
Planning – Engineering – Environmental Services – Photogrammetry – Surveying – Construction Management
808 842 1133 420 Waiakamilo Road Suite 411 Honolulu Hawaii 96817–4941

LESTER H. INOUYE LICENSED PROFESSIONAL LANDSCAPE ARCHITECT No. 5530 HAWAII, U.S.A.
THIS WORK WAS PREPARED BY ME OR UNDER MY SUPERVISION.
Signature 7-6-01

HAWAII COMMUNITY DEVELOPMENT AUTHORITY
STATE OF HAWAII
HONOLULU, HAWAII
KAKA'AKO COMMUNITY DEVELOPMENT DISTRICT
IMPROVEMENT DISTRICT 9
ILALO STREET IMPROVEMENTS

PLANTING DETAILS

LANDSCAPE ARCHITECT: LI
DRAFTSMAN: RE/MM
DATE: 05/30/01
EXECUTIVE DIRECTOR, HAWAII COMMUNITY DEVELOPMENT AUTHORITY

FILE	POCKET	FOLDER	NO.

ILALO STREET IMPROVEMENTS; KAKAAKO COMMUNITY DEVELOPMENT DISTRICT; TMK: 2-1-15, 2-1-59, & 2-1-60; DPP Ref. No. S419119-7

AHUI STREET

Note: Contractor shall install one spare wire from Controller 101 to Valve 101/01 for future use.

MATCH LINE 4+50

KOULA STREET

EXISTING SLPB

TRUE NORTH SCALE 1" = 20'

IRRIGATION PLAN 1-A
SCALE: 1" = 20'-0"

MATCH LINE 4+50

See Mound Section Detail for irrigation system within median (Typ.) — A / L-3

Connect New Makai Park Irrigation Main to existing 2½" Irrigation Main

Remove 8 each Existing Sprinklers & install new P/C Rotor at Sidewalk

Adjust existing full circle sprinkler into a part circle sprinkler throwing into field

Existing Valves C-9, C-11 & D-11 to be abandoned. Terminate those wires by new valve C-9

Connect New Makai Park Irrigation Main to existing 2½" Irrigation Main

MATCH LINE 9+00

TRUE NORTH SCALE 1" = 20'

Point of Connection: Contractor to Connect to 1½" Reduced Pressure Backflow Prevention Unit provided by by General Contractor at approximate location shown. (See Civil Plans for exact location).

OHE STREET

Repair existing irrigation damanged during construction. Adjust as needed to accomodate new hardscape.

IRRIGATION PLAN - 1B
SCALE: 1" = 20'-0"

SHEET L-1 PLAN-1A PLAN-1B | SHEET L-2 PLAN-2A PLAN-2B | SHEET L-3 PLAN - 3

CEDAR CEDAR KEAWE

NORTH

KEYMAP
NOT TO SCALE

REVISION	DATE	DESCRIPTION	MADE BY	APPROVED
4	5/30/01	Revised per sidewalk planter and paver layout. This sheet superceeds I-1.	AS	LH

Planning – Engineering – Environmental Services – Photogrammetry – Surveying – Construction Management
R. M. TOWILL CORPORATION
808 842 1133 420 Waiakamilo Road Suite 411 Honolulu Hawaii 96817-4941

LESTER H. INOUE LICENSED PROFESSIONAL LANDSCAPE ARCHITECT No. 5530 HAWAII, U.S.A.

THIS WORK WAS PREPARED BY ME OR UNDER MY SUPERVISION.

Signature 7-6-01

HAWAII COMMUNITY DEVELOPMENT AUTHORITY
STATE OF HAWAII
HONOLULU, HAWAII

KAKA'AKO COMMUNITY DEVELOPMENT DISTRICT
IMPROVEMENT DISTRICT 9
ILALO STREET IMPROVEMENTS

LANDSCAPE IRRIGATION PLAN - 1
0+00 TO 4+50 / 4+50 TO 9+00

LANDSCAPE ARCHITECT: LI
DRAFTSMAN: PS/AS DATE: 10/29/99

EXECUTIVE DIRECTOR, HAWAII COMMUNITY DEVELOPMENT AUTHORITY

FILE	POCKET	FOLDER	NO.

"RECORD DRAWINGS" I-1R SHEET 117 OF 140 SHEETS

L-1.dwg DATE: 06/18/99 TIME: 4:15p.m.

Cap Existing Laterals
Connect to Existing Laterals
Cap Existing Laterals

Controller 101: Contractor to install a 24-Station Controller within a NEMA 3R Stainless Steel Enclosure At approximate location shown. (See Electrical Plans for exact location of electrical power for Controller).

MATCH LINE 9+00
MATCH LINE 13+00
LIMIT OF WORK
WIRE 2" 2" 4"
COOKE STREET
STOP STOP ONLY
CORAL STREET
Wire to Existing Park Controller A
Repair any damage to existing irrigation within this area due to construction. Adjust existing as needed to accomodate new hardscape.
Existing Park Controllers A & B
Connect to existing 1/2" lateral (Typical)
See Tree Well Detail for irrigation system within Tree Wells (Typical)
A L-3
101 22 1½" 39
TRUE NORTH SCALE 1" = 20'

IRRIGATION PLAN - 2A
SCALE: 1" = 20'-0"

MATCH LINE 13+00
MATCH LINE 16+90
LIMIT OF WORK
See Tree Well Detail for irrigation system within Tree Wells (Typical)
A L-3
WIRE 2" 2" 4"
CORAL STREET
STOP
KEAWE STREET
101 22 1½" 39
101 23 1½" 36
101 24 1½" 33
101 25 1½" 36
TRUE NORTH SCALE 1" = 20'

IRRIGATION PLAN - 2B
SCALE: 1" = 20'-0"

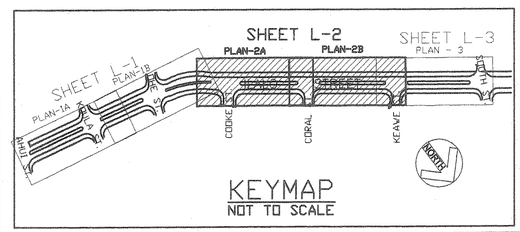

KEYMAP
NOT TO SCALE

REVISION	DATE	DESCRIPTION	MADE BY	APPROVED
4	5/30/01	Revised sidewalk planter and paver layout. This sheet supercedes L-2.	AS	LHI

Planning - Engineering - Environmental Services - Photogrammetry - Surveying - Construction Management
R. M. TOWILL CORPORATION
808 842 1133 420 Waiakamilo Road Suite 411 Honolulu Hawaii 96817-4941

LESTER H. INOUYE LICENSED PROFESSIONAL LANDSCAPE ARCHITECT No. 5530 HAWAII, U.S.A.

THIS WORK WAS PREPARED BY ME OR UNDER MY SUPERVISION.

Signature 7-6-01

HAWAII COMMUNITY DEVELOPMENT AUTHORITY
STATE OF HAWAII
HONOLULU, HAWAII

KAKA'AKO COMMUNITY DEVELOPMENT DISTRICT
IMPROVEMENT DISTRICT 9
ILALO STREET IMPROVEMENTS

LANDSCAPE IRRIGATION PLAN - 2
9+00 TO 13+00 / 13+00 TO 16+90

LANDSCAPE ARCHITECT: LI
DRAFTSMAN: FS/AS
DATE: 10/29/99

EXECUTIVE DIRECTOR, HAWAII COMMUNITY DEVELOPMENT AUTHORITY

FILE	POCKET	FOLDER	NO.

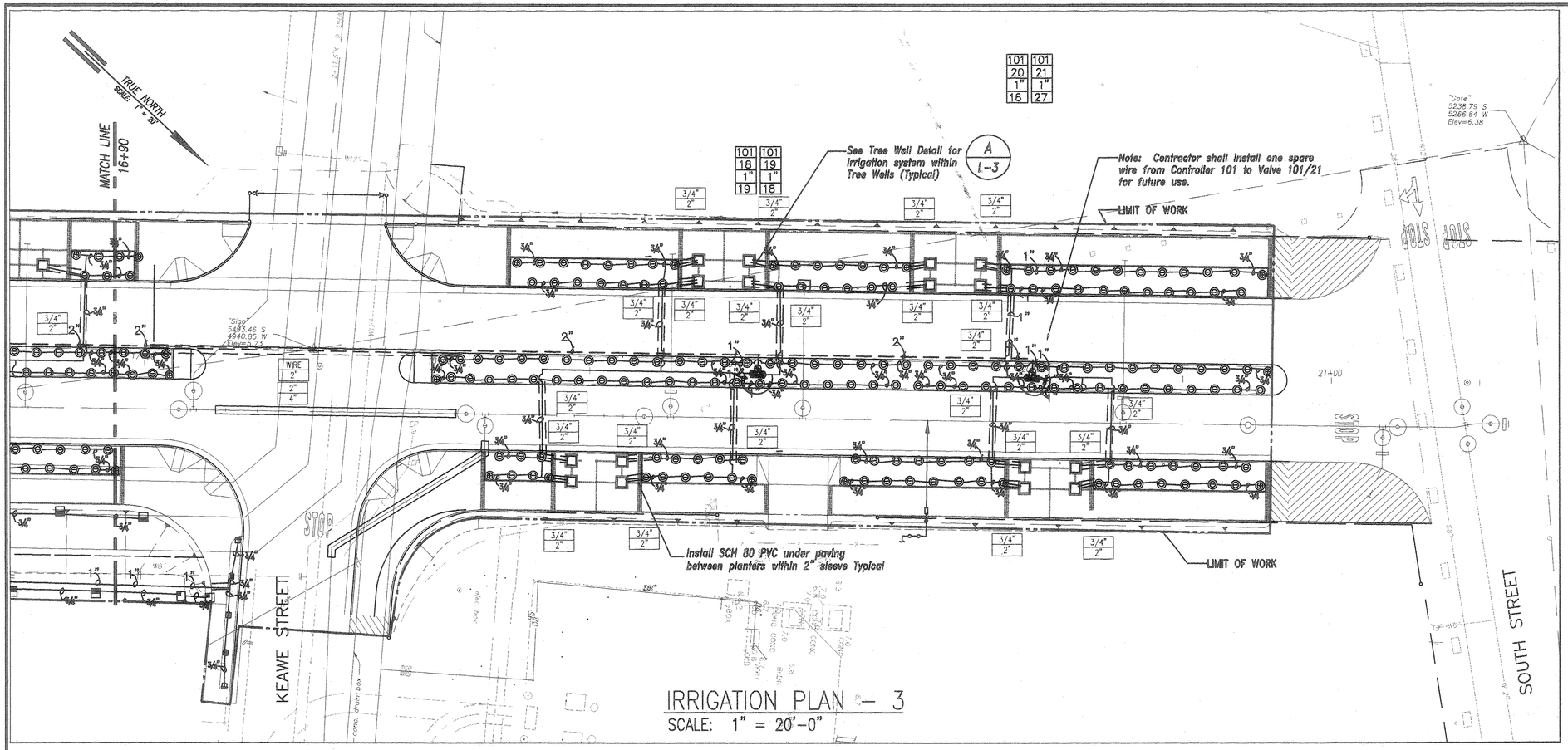

IRRIGATION PLAN – 3
SCALE: 1" = 20'-0"

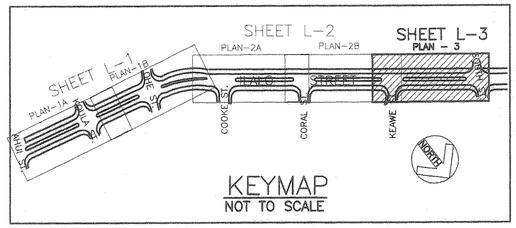

KEYMAP
NOT TO SCALE

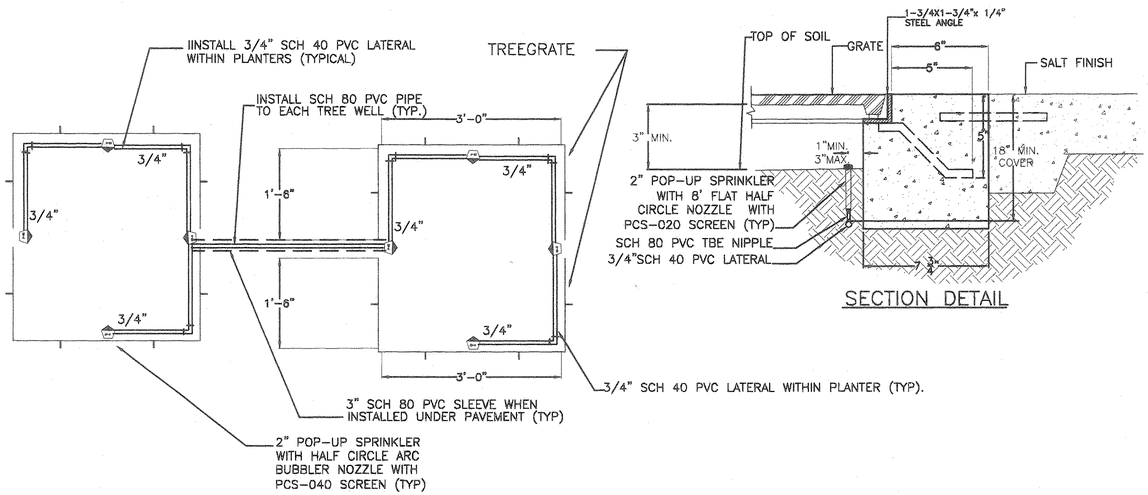

PLAN VIEW

SECTION DETAIL

A / L-3 IRRIGATION WITHIN TREE WELL DETAIL
NOT TO SCALE

REVISION	DATE	DESCRIPTION	MADE BY	APPROVED
4	5/30/01	Revised per new sidewalk planter and power layout. This sheet supercedes L-3.	AS	LHI

Planning – Engineering – Environmental Services – Photogrammetry – Surveying – Construction Management
R. M. TOWILL CORPORATION
808 842 1133 420 Waiakamilo Road Suite 411 Honolulu Hawaii 96817-4941

LESTER H. INOUYE
LICENSED PROFESSIONAL LANDSCAPE ARCHITECT
No. 5530
HAWAII, U.S.A.

THIS WORK WAS PREPARED BY ME OR UNDER MY SUPERVISION

Signature 7-6-01

HAWAII COMMUNITY DEVELOPMENT AUTHORITY
STATE OF HAWAII
HONOLULU, HAWAII

KAKA'AKO COMMUNITY DEVELOPMENT DISTRICT
IMPROVEMENT DISTRICT 9

ILALO STREET IMPROVEMENTS
LANDSCAPE IRRIGATION PLAN – 3
16+90 TO 21+45.86
MOUND & TREE WELL INSTALLATION DETAILS

LANDSCAPE ARCHITECT: LI
DRAFTSMAN: FS/AS
DATE: 10/29/99

EXECUTIVE DIRECTOR, HAWAII COMMUNITY DEVELOPMENT AUTHORITY

FILE	POCKET	FOLDER	NO.

"RECORD DRAWINGS" L-3R SHEET 119 OF 140 SHEETS

LP-3.dwg DATE: 06/18/99 TIME: 11:40a.m.

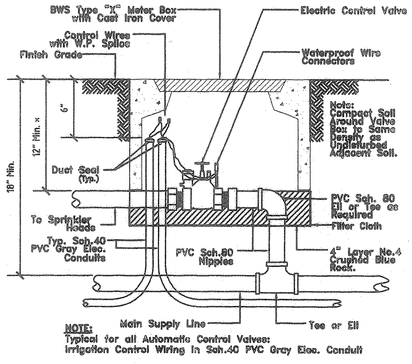

NOTE:
Typical for all Automatic Control Valves:
Irrigation Control Wiring in Sch.40 PVC Gray Elec. Conduit

* See Standard Detail Drawing No. I-1

1 REMOTE CONTROL VALVE DETAIL

NOT TO SCALE

CADD REF: IRR-210

NOTE: 1. KBI OR LASCO SWING JOINTS MAY BE USED UPON APPROVAL BY LANDSCAPE ARCHITECT.
2. INSTALL PART CIRCLE POP-UP HEADS 6" FROM EDGE OF PAVED AREAS. PAVED AREAS.

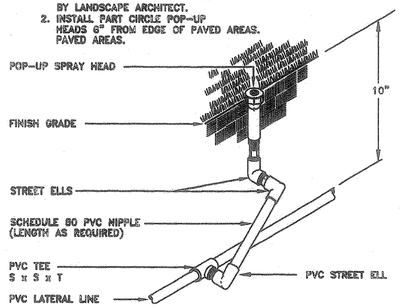

2 LAWN SPRAY POP-UP HEAD

NOT TO SCALE

CADD REF: IRR-101

NOTE: 1. KBI OR LASCO SWING JOINTS MAY BE USED UPON APPROVAL BY LANDSCAPE ARCHITECT.
2. INSTALL PART CIRCLE POP-UP HEADS 6" FROM EDGE OF PAVED AREAS.

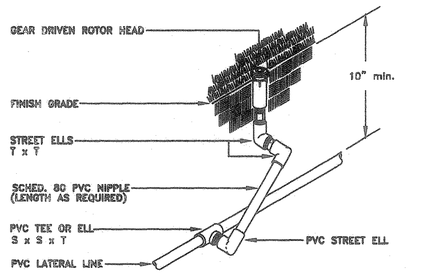

3 GEAR DRIVEN ROTOR POP-UP

NOT TO SCALE

CADD REF: IRR-107

IRRIGATION MATERIAL SCHEDULE

SYMBOL	DESCRIPTION	MANUFACTURER/ CATALOG NUMBER
	32-STATION - SATELLITE WALL MOUNT CONTROLLER	RAINBIRD ESP-MC SERIES OR ACCEPTABLE EQUAL IN A STRONGBOX SB-24-SS PEDESTAL ENCLOSURE
	REMOTE CONTROL VALVE (SIZE NOTED ON PLAN)	RAIN BIRD EFB-CP-PRS-D, GRISWALD DWS-PRV OR ACCEPTABLE EQUAL
	REDUCED PRESSURE BACKFLOW PREVENTION DEVICE	PROVIDED BY GENERAL - SEE CIVIL PLANS (INSTALLED PER BWS STANDARD DETAIL)
	GATE VALVE	NIBCO T-113 OR APPROVED EQUAL, 3" OR LESS KENNEDY AWWA RING TITE 4" OR LARGER
	MANUAL ANGLE VALVE	CHAMPION 300 SERIES OR BUCKNER 22000 SERIES OR ACCEPTABLE EQUAL (2" UNLESS NOTED)
	QUICK COUPLER VALVE	1" INLET WITH NON-POTABLE RUBBER COVER PROVIDE 6 KEYS WITH 1" X 3/4" HOSE SWIVELS
	IRRIGATION MAINLINE	PVC WITH TRACER WARNING TAPE - SEE SPEC'S (SIZE AS NOTED) - 18" MIN. COVER
	IRRIGATION LATERAL	CLASS 200 PVC, (SIZE AS NOTED), 10" MIN. COVER
	IRRIGATION SLEEVE	PVC, SIZE AS NOTED, (24" MIN. COVER) SEE SPEC'S)
	IRRIGATION CONDUIT	SCHEDULE 80 PVC, SIZE AS NOTED, (24" MIN. COVER)
	EXISTING IRRIGATION MAINLINE	
	EXISTING IRRIGATION LATERAL	
	EXISTING SPRINKLER	
	EXISTING CONTOL VALVE	
3/4" 2"	SLEEVE SIZE	
WIRE 2	RACEWAY FOR CONDUIT SIZE	

CONTROLLER → 101 / 23 — STATION NUMBER

VALVE SIZE → 2" / 75 — FLOW THROUGH VALVE (GPM)

IRRIGATION SCHEDULE

HEAD SYMBOL	ANGLE	MANUFACTURER/ CATALOG NUMBER	G.P.M.	P.S.I.	RAD.
TREE BUBBLER SPRINKLER; 2" POP-UP STREAM BUBBLER NOZZLE		RAIN BIRD 1802-SAM-SH-PCS-020 WITH PRESSURE REGULATED NOZZLE OR ACCEPTABLE EQUAL (INSTALL AS DETAILED)			
	90°	1802-SAM-SH-PCS-020	0.20	30	2'
SHRUB SPRAY SPRINKLER; 6" POP-UP LOW-ANGLE NOZZLE		RAIN BIRD 1806-SAM-PRS-SX WITH PRESSURE REGULATED BODY OR ACCEPTABLE EQUAL			
	90°	1806-SAM-PRS-SQ	0.25	30	8'
	120°	1806-SAM-PRS-ST	0.35	30	8'
	180°	1806-SAM-PRS-SH	0.52	30	8'
	240°	1806-SAM-PRS-STT	0.70	30	8'
	270°	1806-SAM-PRS-STQ	0.70	30	8'
	360°	1806-SAM-PRS-SF	1.05	30	8'
SHRUB SPRAY SPRINKLER; 6" POP-UP STANDARD NOZZLE		RAIN BIRD 1806-SAM-PRS-15x WITH PRESSURE REGULATED BODY OR ACCEPTABLE EQUAL			
	90°	1806-SAM-PRS-15Q	0.92	30	15'
	120°	1806-SAM-PRS-15T	1.23	30	15'
	180°	1806-SAM-PRS-15H	1.85	30	15'
	240°	1806-SAM-PRS-15TT	2.48	30	15'
	270°	1806-SAM-PRS-15TQ	2.78	30	15'
	360°	1806-SAM-PRS-15F	3.70	30	15'
	END STRIP	1806-SAM-PRS-15EST	0.61	30	4'X15'
	SIDE STRIP	1806-SAM-PRS-15SST	1.21	30	4'X15'
LAWN SPRAY POP-UP SPRINKLER; 4" POP-UP LOW-ANGLE NOZZLE		RAIN BIRD 1804-SAM-PRS-Sx WITH PRESSURE REGULATED BODY OR ACCEPTABLE EQUAL			
	90°	1804-SAM-PRS-SQ	0.25	30	8'
	120°	1804-SAM-PRS-ST	0.35	30	8'
	180°	1804-SAM-PRS-SH	0.52	30	8'
	240°	1804-SAM-PRS-STT	0.70	30	8'
	270°	1804-SAM-PRS-STQ	0.70	30	8'
	360°	1804-SAM-PRS-SF	1.05	30	8'
LAWN SPRAY POP-UP SPRINKLER; 4" POP-UP STANDARD NOZZLE		RAIN BIRD 1804-SAM-PRS-15x WITH PRESSURE REGULATED BODY OR ACCEPTABLE EQUAL			
	90°	1804-SAM-PRS-15Q	0.92	30	15'
	120°	1804-SAM-PRS-15T	1.23	30	15'
	180°	1804-SAM-PRS-15H	1.85	30	15'
	240°	1804-SAM-PRS-15TT	2.48	30	15'
	270°	1804-SAM-PRS-15TQ	2.78	30	15'
	360°	1804-SAM-PRS-15F	3.70	30	15'
	END STRIP	1804-SAM-PRS-15EST	0.61	30	4'X15'
	SIDE STRIP	1804-SAM-PRS-15SST	1.21	30	4'X15'
LAWN ROTOR 4" POP-UP		HUNTER PGP OR TORO S700-4P (OR ACCEPTABLE EQUAL)			
	ADJ	PGP-ADV-04 (30-120°)	1.60	50	34'
	ADJ	PGP-ADV-07 (121-310°)	3.40	50	42'
	360°	PGP-330-10 (360°)	7.60	50	49'

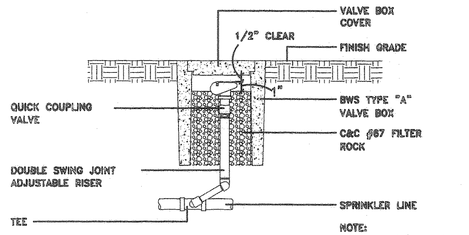

NOTE:
SEE PARK STANDARD DETAIL FOR PVC DOUBLE SWING JOINT DETAIL

4 QUICK COUPLING VALVE

NOT TO SCALE

CADD REF: IRR-213

THRUST BLOCK BEARING AREA (SQ. FT.)				
PIPE SIZE	1 1/4" - 2 1/2"	3"	4"	6"
TEES/ELLS	1.00	1.00	1.25	3.2
90 BENDS	1.00	1.25	2.00	4.5
45 BENDS	1.00	1.00	1.00	2.4

NOTE:
INSTALL THRUST BLOCK AT ALL MAINLINE BENDS, TEES OR ELLS AS SHOWN BELOW. THRUST BLOCKS SHALL BE MINIMUM OF (1) CU. FT. REDI-MIX CONCRETE OR 2500 PSI 28 DAY CONCRETE.

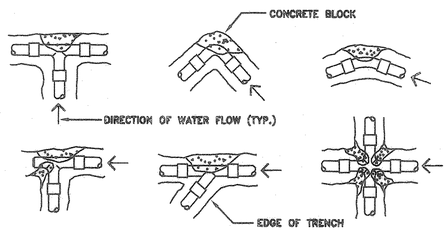

5 THRUST BLOCK DETAIL

NOT TO SCALE

CADD REF: IRR-401

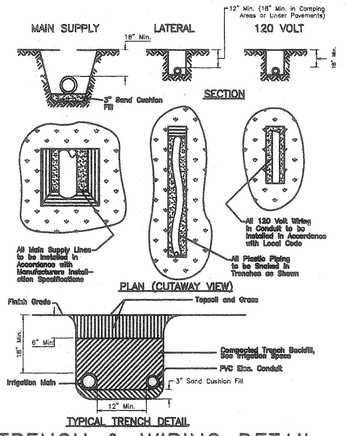

TYPICAL TRENCH DETAIL

6 TRENCH & WIRING DETAIL

NOT TO SCALE

CADD REF: IRR-402

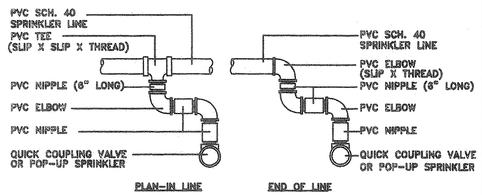

PLAN-IN LINE — END OF LINE

KING BROTHERS INDUSTRIES (KBI)
TRIPLE SWING JOINT ADJUSTABLE RISER
MAY BE USED IN LIEU OF DOUBLE SWING JOINT ADJUSTABLE RISER.

7 DOUBLE SWING JOINT DETAIL

NOT TO SCALE

CADD REF: IRR-502

IRRIGATION NOTES

1. IRRIGATION SYSTEM IS DIAGRAMMATIC AND SUBJECT TO CHANGES DUE TO ACTUAL LANDSCAPE LAYOUT AND UNANTICIPATED FIELD CONDITIONS. ADJUST ALL SYSTEMS TO ASSURE PROPER COVERAGE AND TO AVOID ANY CONFLICTS BETWEEN IRRIGATION SYSTEM, PLANTINGS, UTILITIES AND ARCHITECTURAL ELEMENTS.
2. CONTRACTOR SHALL INSPECT THE SITE CONDITIONS PRIOR TO COMMENCING WITH THE WORK. ANY DISCREPANCIES OR UNUSUAL CONDITIONS SHALL BE BROUGHT TO THE ATTENTION OF THE LANDSCAPE ARCHITECT. BY COMMENCING WITH THE WORK, THE CONTRACTOR ACCEPTS THE EXISTING CONDITIONS AND RESPONSIBILITY FOR MAINTAINING THOSE CONDITIONS.
3. CONTRACTOR SHALL BE RESPONSIBLE FOR COORDINATING THE IRRIGATION WORK WITH THE GENERAL CONTRACTOR AND ALL SUB-CONTRACTORS OR TRADES, ESPCIALLY THE INSTALLATION OF SLEEVES, CONDUITS, ELECTRICAL LINES AND WATER CONNECTIONS.
4. CONTRACTOR SHALL INSTALL ALL EQUIPMENT ACCORDING TO THE CITY AND COUNTY PARKS DEPARTMENT STANDARD DETAILS EXCEPT WHEN MODIFIED ABOVE.
5. CONTRACTOR SHALL ADJUST ALL PRESSURE REGULATING CONTROL DEVICES ON EACH REMOTE CONTROL VALVE TO INSURE THE DOWNSTREAM PRESSURE DOES NOT EXCEED 33 PSI FOR SPRAY AND BUBBLER TYPE SPRINKLER CIRCUITS AND 50 PSI FOR ALL ROTARY SPRINKLER CIRCUITS.
6. CONTRACTOR SHALL ADJUST ANY EXISTING SYSTEMS AFFECTED BY THE NEW WORK TO INSURE NO OVERSPRAY ONTO WALKWAYS OR ROADS. ANY DAMAGE INCCURED AS A RESULT OF NEW CONSTRUCTION SHALL BE REPAIRED IMMEDIATELY AT THE CONTRACTORS EXPENSE.

REVISION	DATE	DESCRIPTION	MADE BY	APPROVED
1	5/30/01	General Revisions. This sheet superceeds I-4.	AS	LHI

R. M. TOWILL CORPORATION
Planning - Engineering - Environmental Services - Photogrammetry - Surveying - Construction Management
808 842 1133 420 Waiakamilo Road Suite 411 Honolulu Hawaii 96817-4941

LESTER H. INOUYE
LICENSED PROFESSIONAL LANDSCAPE ARCHITECT
No. 5530
HAWAII, U.S.A.

THIS WORK WAS PREPARED BY ME OR UNDER MY SUPERVISION.

Signature 7-6-01

HAWAII COMMUNITY DEVELOPMENT AUTHORITY
STATE OF HAWAII
HONOLULU, HAWAII

KAKA'AKO COMMUNITY DEVELOPMENT DISTRICT

IMPROVEMENT DISTRICT 9

ILALO STREET IMPROVEMENTS

LANDSCAPE IRRIGATION DETAILS

LANDSCAPE ARCHITECT: LI
DRAFTSMAN: AS/AS
DATE: 10/29/99

EXECUTIVE DIRECTOR, HAWAII COMMUNITY DEVELOPMENT AUTHORITY

FILE	POCKET	FOLDER	NO.

"RECORD DRAWINGS" I-4R SHEET 120 OF 140 SHEETS

L-4plantingdetail.dwg DATE: 06/18/99 TIME: 3:40p.m.

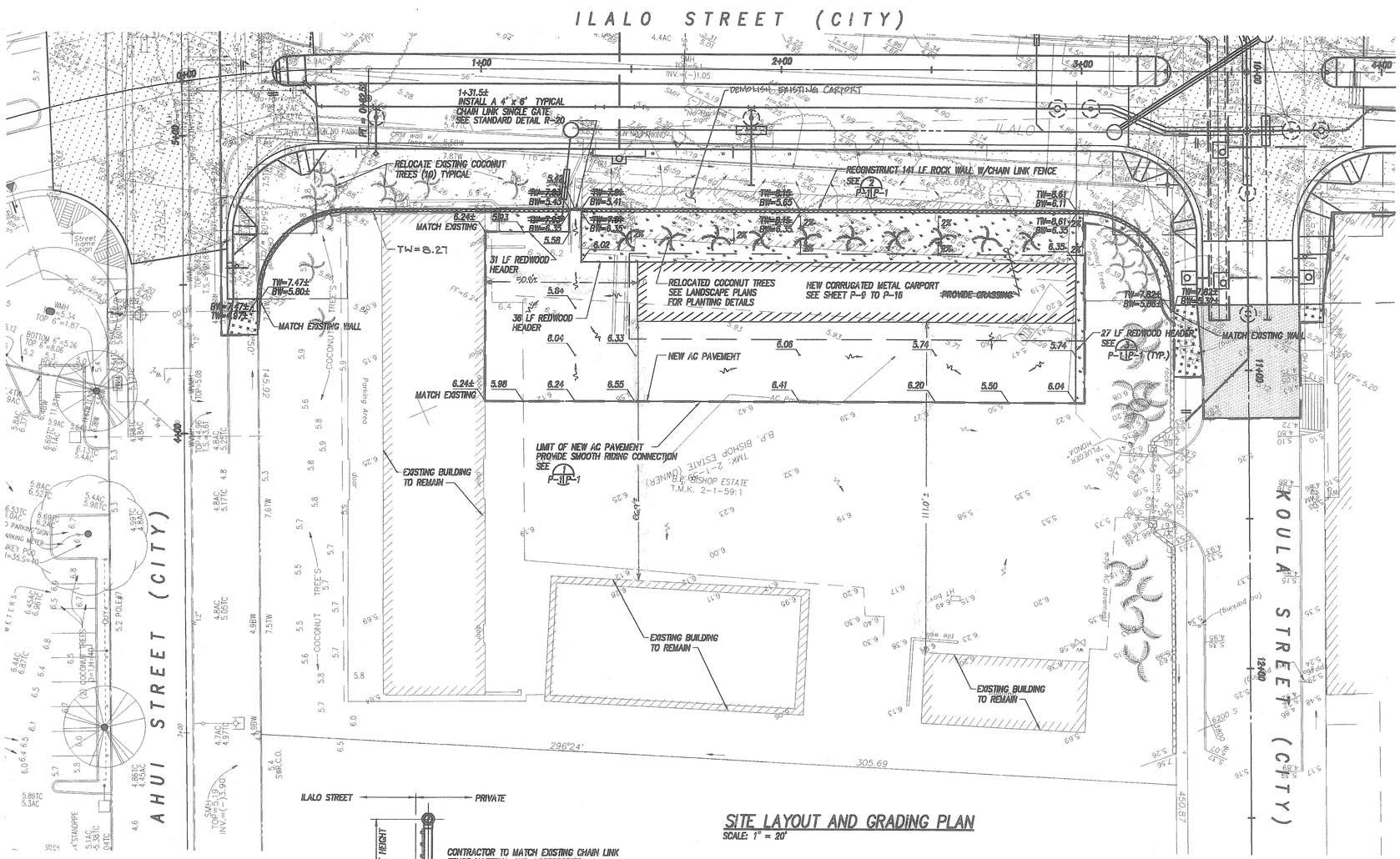

SITE LAYOUT AND GRADING PLAN
SCALE: 1" = 20'

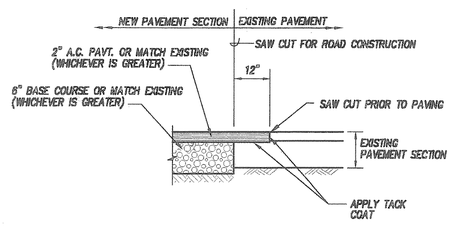

1 VARIOUS P-1 PAVEMENT CONNECTION DETAIL
NOT TO SCALE

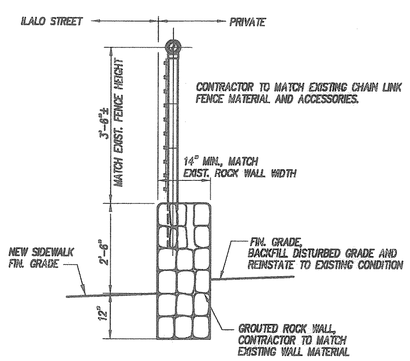

2 P-1 P-1 CRM WALL W/ CHAIN LINK FENCE RECONSTRUCTION DETAIL
NOT TO SCALE

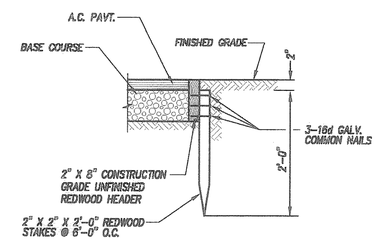

3 VARIOUS P-1 REDWOOD HEADER DETAIL
NOT TO SCALE

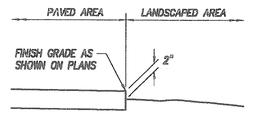

TYPICAL LANDSCAPING EDGE
NOT TO SCALE

GRAPHIC SCALE:
1"=20'
20 0 20 40
SCALE IN FEET

REVISION	DATE	DESCRIPTION	MADE BY	APPROVED

R. M. TOWILL CORPORATION
Planning – Engineering – Environmental Services – Photogrammetry – Surveying – Construction Management
808 842 1133 420 Waiakamilo Road Suite 411 Honolulu Hawaii 96817-4941

GREG H. HIYAKUMOTO
LICENSED PROFESSIONAL ENGINEER
No. 6662-C
HAWAII, U.S.A.

THIS WORK WAS PREPARED BY ME OR UNDER MY SUPERVISION.
BY: R.M. TOWILL CORPORATION

HAWAII COMMUNITY DEVELOPMENT AUTHORITY
STATE OF HAWAII
HONOLULU, HAWAII
KAKA'AKO COMMUNITY DEVELOPMENT DISTRICT
IMPROVEMENT DISTRICT 9
ILALO STREET IMPROVEMENTS

PROPERTY MODIFICATIONS–1
TMK: 2–1–59:01

ENGINEER: LY
DRAFTSMAN: HA
CHECKED BY: GH
DATE: JULY 27, 2000

EXECUTIVE DIRECTOR, HAWAII COMMUNITY DEVELOPMENT AUTHORITY

FILE	POCKET	FOLDER	NO.

TRUE NORTH
SCALE: 1" = 20'

ILALO STREET (CITY)

KOULA STREET (CITY)

OHE STREET (CITY)

INSTALL 143 LF 6' HIGH CHAIN LINK FENCE

5.76 MATCH EXISTING

5.85

5.90

6.06

PARKING STALLS 8.5' x 18'

5.33

5.26

4.98

5.20± MATCH EXISTING

5.18

4" WHITE STRIPE, TYP.

RELOCATE SIGN

LIMIT OF RESURFACING PROVIDE SMOOTH RIDING CONNECTION TO EXIST. A.C. PAVEMENT SEE 2 P-21C-31

4.69

4.75

4.37

4" YELLOW STRIPE WITH TYPE J RPMs @ 5' O.C.

R=24'

RELOCATE LIGHT POLE(S) (2) SEE SHEET P-18

R=24'

R=24'

R=20'

REMOVE EXISTING STRIPING AND RPMs

INSTALL NEW 25' WIDE CHAIN LINK ROLLING GATE

EXISTING BUILDING TO REMAIN

50 LF CONC. HEADER UNDER ROLLING GATE SEE DETAIL BELOW

TMK: 2-1-59:4
B.P. BISHOP ESTATE (OWNER)

TMK: 2-1-59:5
B.P. BISHOP ESTATE

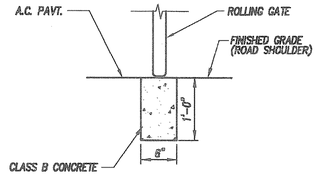

1 / P-2 | P-2 CONCRETE HEADER DETAIL
NOT TO SCALE

SITE LAYOUT AND GRADING PLAN
SCALE: 1" = 20'

GRAPHIC SCALE:
20 0 20 40
SCALE IN FEET
1"=20'

REVISION	DATE	DESCRIPTION	MADE BY	APPROVED

Planning – Engineering – Environmental Services – Photogrammetry – Surveying – Construction Management
R. M. TOWILL CORPORATION
808 842 1133 420 Waiakamilo Road Suite 411 Honolulu Hawaii 96817-4941

GREG H. HIYAKUMOTO
LICENSED PROFESSIONAL ENGINEER
No. 6662-C
HAWAII, U.S.A.

THIS WORK WAS PREPARED BY ME OR UNDER MY SUPERVISION.
BY: R/M. TOWILL CORPORATION

HAWAII COMMUNITY DEVELOPMENT AUTHORITY
STATE OF HAWAII
HONOLULU, HAWAII
KAKA'AKO COMMUNITY DEVELOPMENT DISTRICT
IMPROVEMENT DISTRICT 9
ILALO STREET IMPROVEMENTS

PROPERTY MODIFICATIONS-2
TMK: 2-1-59:04 & 05

ENGINEER: LSY
DRAFTSMAN: BN
CHECKED BY: GH
DATE: JULY 27, 2000

EXECUTIVE DIRECTOR, HAWAII COMMUNITY DEVELOPMENT AUTHORITY

"RECORD DRAWINGS" P-2

FILE	POCKET	FOLDER	NO.

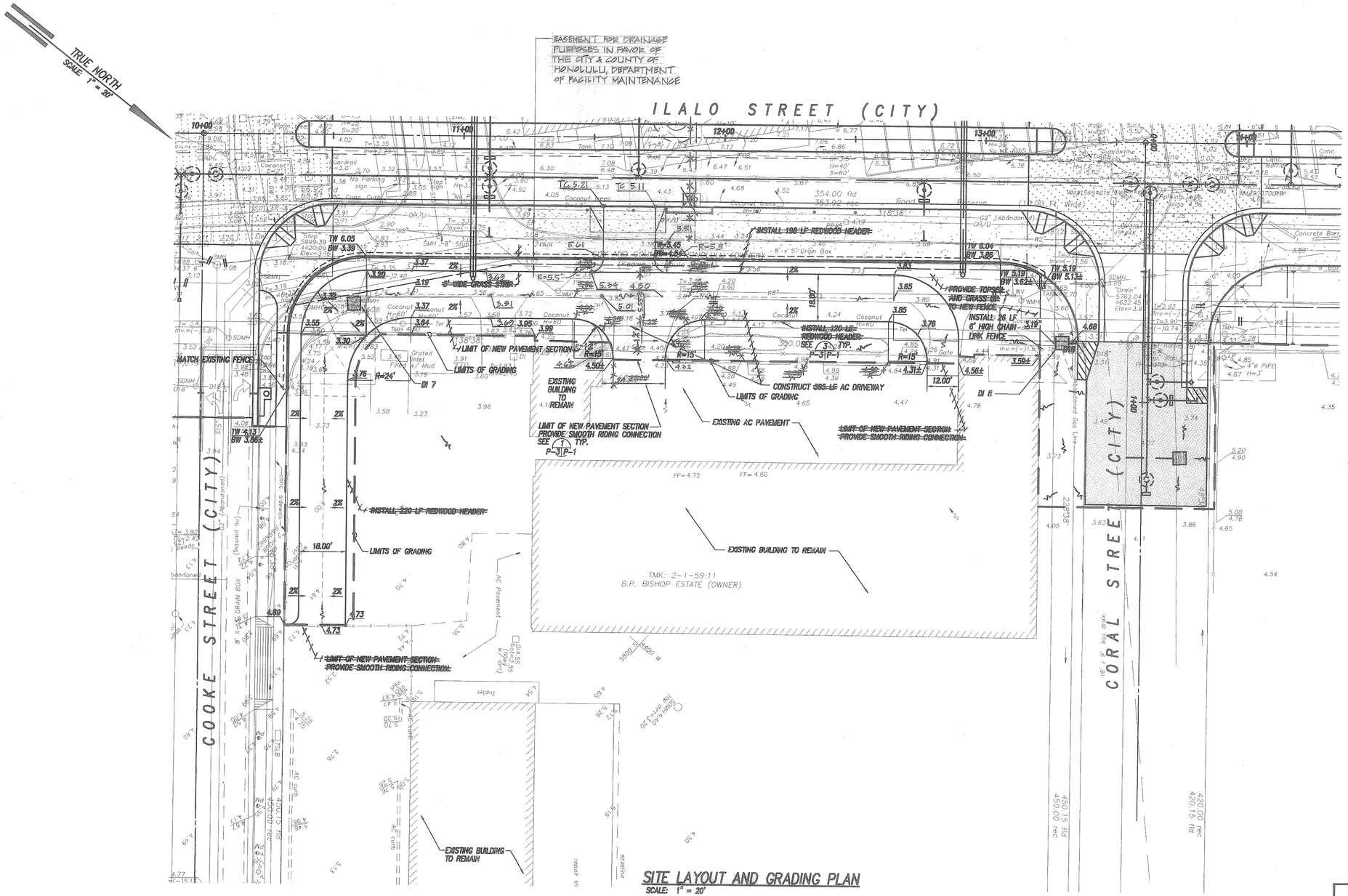
TRUE NORTH
SCALE: 1" = 20'
EASEMENT FOR DRAINAGE PURPOSES IN FAVOR OF THE CITY & COUNTY OF HONOLULU, DEPARTMENT OF FACILITY MAINTENANCE
ILALO STREET (CITY)
COOKE STREET (CITY)
CORAL STREET (CITY)
INSTALL 198 LF REDWOOD HEADER
INSTALL 120 LF REDWOOD HEADER SEE 3 P-3
INSTALL 26 LF 6' HIGH CHAIN LINK FENCE
PROVIDE TOPSOIL AND GRASS IN TO NEW FENCE
CONSTRUCT 365 LF AC DRIVEWAY
INSTALL 220 LF REDWOOD HEADER
5' WIDE GRASS STRIP
MATCH EXISTING FENCE
LIMIT OF NEW PAVEMENT SECTION
LIMITS OF GRADING
EXISTING BUILDING TO REMAIN
LIMIT OF NEW PAVEMENT SECTION PROVIDE SMOOTH RIDING CONNECTION SEE 1 P-3
EXISTING AC PAVEMENT
LIMIT OF NEW PAVEMENT SECTION PROVIDE SMOOTH RIDING CONNECTION
EXISTING BUILDING TO REMAIN
TMK: 2-1-59:11
B.P. BISHOP ESTATE (OWNER)
LIMIT OF NEW PAVEMENT SECTION PROVIDE SMOOTH RIDING CONNECTION
EXISTING BUILDING TO REMAIN
DI 7
DI 8
TW 6.05 BW 3.39
TW 6.04 BW 3.86
TW 5.19 BW 3.62±
TW 5.19 BW 5.13±
TW 4.13 BW 3.66±
354.00 fld 353.92 rec
390.00'
18.00'
12.00'
R=15'
R=24'
R=5.5'
C=12'
Coconut trees
Concrete Barrier
Concrete Sidewalk
Underground Gas Line
Abandoned
Trailer
AC Pavement
AC curb
Sidewalk
Gate
Grated Inlet
Filled
Tel
Drain
Inv.=(-)10.74
4.66
4.68
4.85
4.87 H=3'
4" ø PIPE
5.20
4.90
5.08
4.78
4.65
4.54
4.35
4.72
4.80
4.89
4.73
4.69
4.63
4.59
4.56±
4.31±
3.59±
3.76
3.85
3.80
3.65
3.64
3.55
3.30
3.19
3.37
3.32
3.20
3.63
3.91
3.99
3.95
3.69
3.67
3.57
3.45
3.41
3.23
3.96
3.58
3.73
3.93
3.44
4.06
4.03
4.01
4.00
3.90
3.86
3.74
3.63
4.05
4.11
4.65
4.78
4.47
4.65
4.49
4.58
4.28
4.39
4.84
4.99
4.44
4.09
4.18
4.24
4.12
4.20
4.26
4.31
4.33
4.40
4.47
4.60
4.64
4.92
5.01
5.24
4.50
5.61
5.51
5.45
5.55
5.13
5.11
5.21
5.00
4.68
4.52
4.43
4.19
4.17
4.07
4.03
3.90
3.83
3.56
3.40
3.39
3.31
3.28
3.22
3.16
3.08
3.06
3.03
2.99
2.90
2.88
2.83
2.75
2.68
2.65
2.61
2.59
2.56
2.52
2.49
2.46
2.43
2.40
2.37
2.34
2.32
2.28
2.25
2.22
2.19
2.16
2.13
2.10
2.07
2.04
2.01
1.98
1.95
1.92
1.89
1.86
1.83
1.80
1.77
1.74
1.71
1.68
1.65
1.62
1.59
1.56
1.53
1.50
1.47
1.44
1.41
1.38
1.35
1.32
1.29
1.26
1.23
1.20
1.17
1.14
1.11
1.08
1.05
1.02
0.99
0.96
0.93
0.90
0.87
0.84
0.81
0.78
0.75
0.72
0.69
0.66
0.63
0.60
0.57
0.54
0.51
0.48
0.45
0.42
0.39
0.36
0.33
0.30
0.27
0.24
0.21
0.18
0.15
0.12
0.09
0.06
0.03
0.00
-0.03
-0.06
-0.09
-0.12
-0.15
-0.18
-0.21
-0.24
-0.27
-0.30
-0.33
-0.36
-0.39
-0.42
-0.45
-0.48
-0.51
-0.54
-0.57
-0.60
-0.63
-0.66
-0.69
-0.72
-0.75
-0.78
-0.81
-0.84
-0.87
-0.90
-0.93
-0.96
-0.99
-1.02
-1.05
-1.08
-1.11
-1.14
-1.17
-1.20

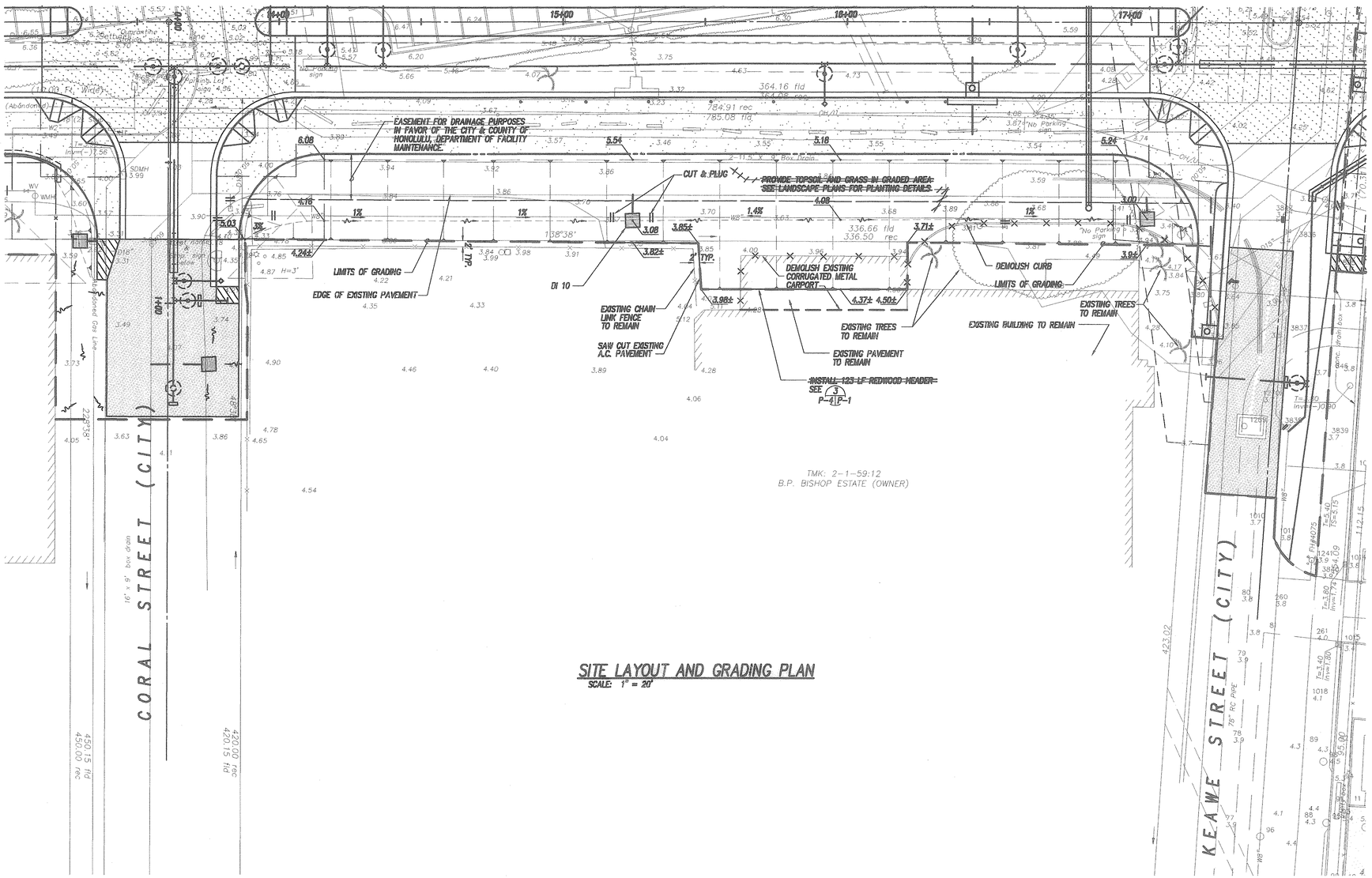

SITE LAYOUT AND GRADING PLAN

SCALE: 1" = 20'

GRAPHIC SCALE:

1"=20' 20 0 20 40

SCALE IN FEET

REVISION	DATE	DESCRIPTION	MADE BY	APPROVED

Planning – Engineering – Environmental Services – Photogrammetry – Surveying – Construction Management
R. M. TOWILL CORPORATION
808 842 1133 420 Waiakamilo Road Suite 411 Honolulu Hawaii 96817-4941

GREG H. HIYAKUMOTO LICENSED PROFESSIONAL ENGINEER No. 6662-C HAWAII, U.S.A.

THIS WORK WAS PREPARED BY ME OR UNDER MY SUPERVISION.

BY: _____ 8/24/00
R.M. TOWILL CORPORATION

HAWAII COMMUNITY DEVELOPMENT AUTHORITY
STATE OF HAWAII
HONOLULU, HAWAII

KAKA'AKO COMMUNITY DEVELOPMENT DISTRICT
IMPROVEMENT DISTRICT 9
ILALO STREET IMPROVEMENTS

PROPERTY MODIFICATIONS–4
TMK: 2-1-59:12

ENGINEER: LSY CHECKED BY: GH
DRAFTSMAN: BN DATE: JULY 27, 2000

EXECUTIVE DIRECTOR, HAWAII COMMUNITY DEVELOPMENT AUTHORITY

"RECORD DRAWINGS" P-4

FILE	POCKET	FOLDER	NO.

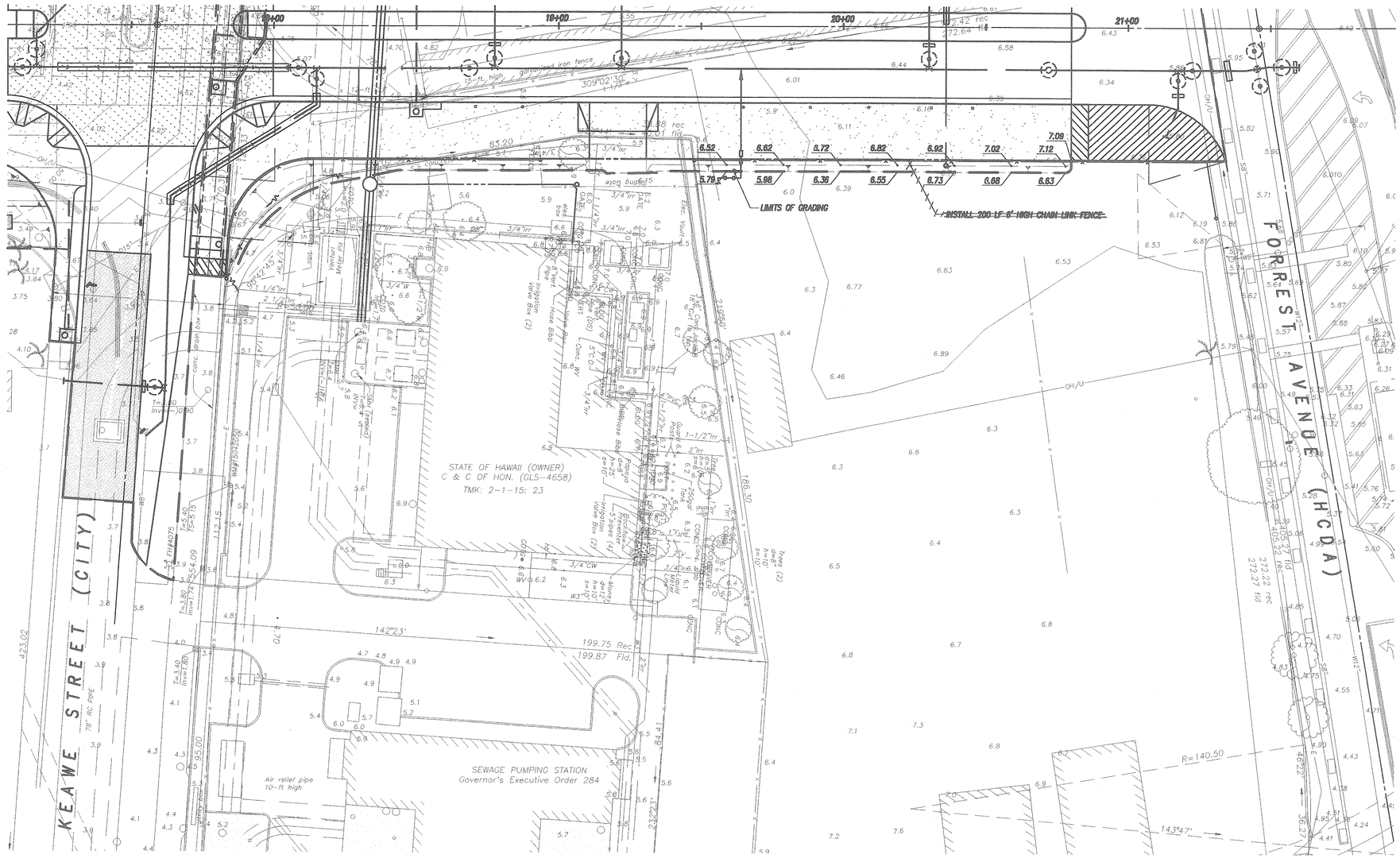

SITE LAYOUT AND GRADING PLAN

SCALE: 1" = 20'

GRAPHIC SCALE:

1"=20' 20 0 20 40

SCALE IN FEET

REVISION	DATE	DESCRIPTION	MADE BY	APPROVED

Planning – Engineering – Environmental Services – Photogrammetry – Surveying – Construction Management
R. M. TOWILL CORPORATION
808 842 1133 420 Waiakamilo Road Suite 411 Honolulu Hawaii 96817-4941

GREG H. HIYAKUMOTO
LICENSED PROFESSIONAL ENGINEER
No. 6662-C
HAWAII, U.S.A.

THIS WORK WAS PREPARED BY ME OR UNDER MY SUPERVISION.

BY: _____
R.M. TOWILL CORPORATION

HAWAII COMMUNITY DEVELOPMENT AUTHORITY
STATE OF HAWAII
HONOLULU, HAWAII

KAKA'AKO COMMUNITY DEVELOPMENT DISTRICT
IMPROVEMENT DISTRICT 9
ILALO STREET IMPROVEMENTS

PROPERTY MODIFICATIONS-5
TMK: 2-1-15:09 por.

ENGINEER: LSY CHECKED BY: GH
DRAFTSMAN: BN DATE: JULY 27, 2000

EXECUTIVE DIRECTOR, HAWAII COMMUNITY DEVELOPMENT AUTHORITY

FILE	POCKET	FOLDER	NO.

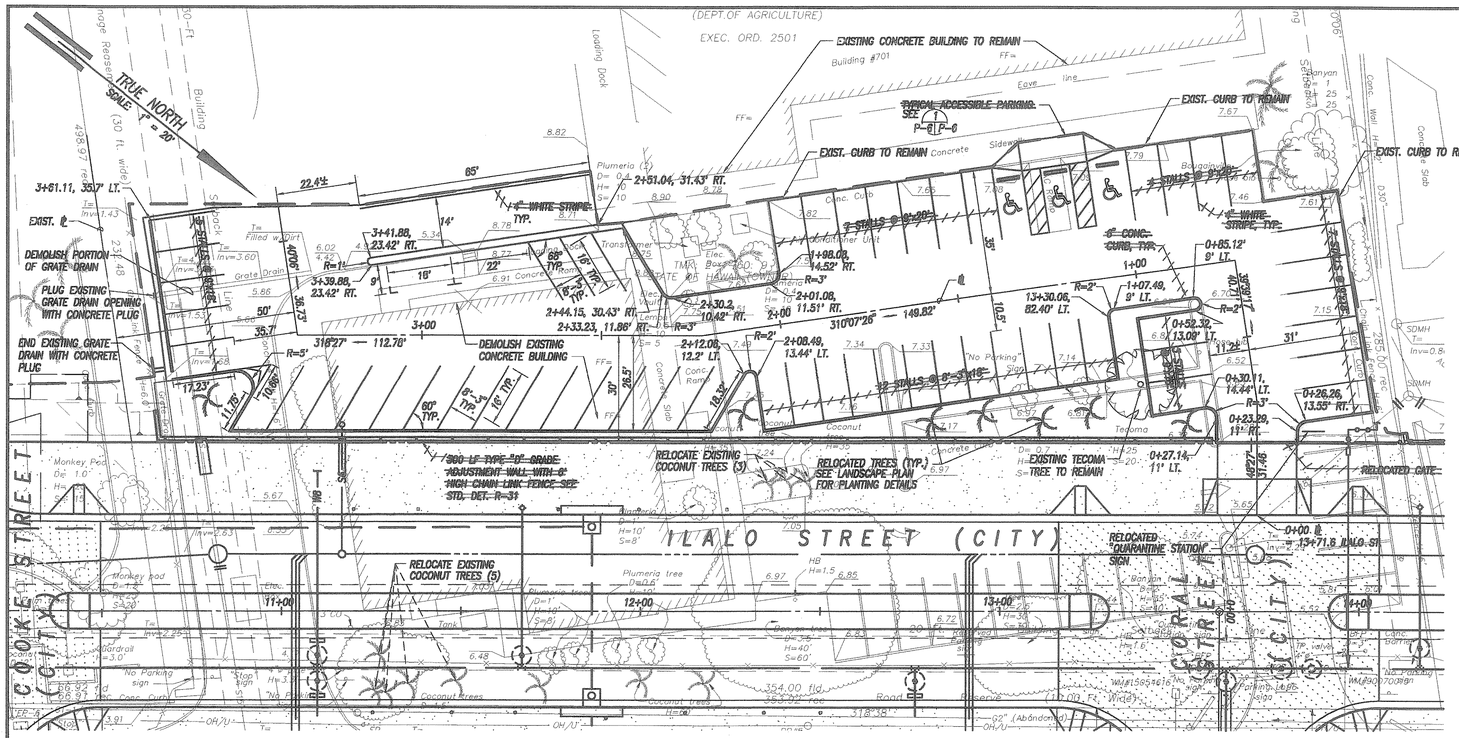

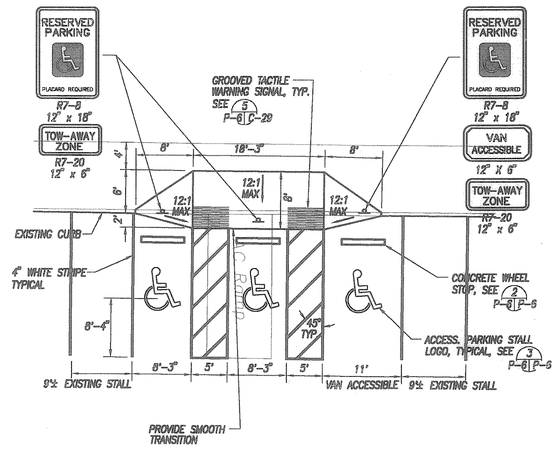

1 ACCESSIBLE PARKING LAYOUT
P-6 P-6
SCALE: 1"=10'

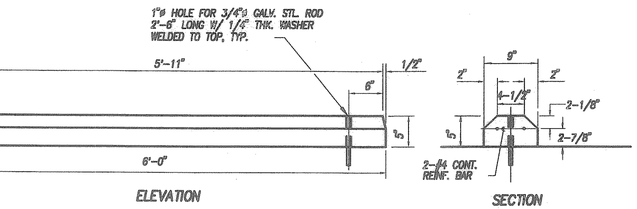

2 CONCRETE WHEEL STOP
P-6 P-6
NOT TO SCALE

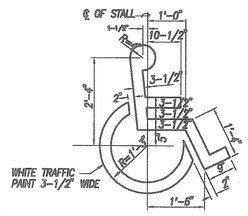

3 ACCESSIBLE PARKING STALL LOGO
P-6 P-6
NOT TO SCALE

GRAPHIC SCALE:
20 0 20 40
1"=20'
SCALE IN FEET

REVISION	DATE	DESCRIPTION	MADE BY	APPROVED

Planning – Engineering – Environmental Services – Photogrammetry – Surveying – Construction Management
R. M. TOWILL CORPORATION
808 842 1133 420 Waiakamilo Road Suite 411 Honolulu Hawaii 96817-4941

GREG H. HIYAKUMOTO
LICENSED PROFESSIONAL ENGINEER
No. 6662-C
HAWAII, U.S.A.

THIS WORK WAS PREPARED BY ME OR UNDER MY SUPERVISION.
BY: R/M. TOWILL CORPORATION

HAWAII COMMUNITY DEVELOPMENT AUTHORITY
STATE OF HAWAII
HONOLULU, HAWAII

KAKA'AKO COMMUNITY DEVELOPMENT DISTRICT
IMPROVEMENT DISTRICT 9
ILALO STREET IMPROVEMENTS

PROPERTY MODIFICATIONS-6
TMK: 2-1-60:10

ENGINEER: LSY
DRAFTSMAN: BN
CHECKED BY: GH
DATE: AUGUST 2, 2000

EXECUTIVE DIRECTOR, HAWAII COMMUNITY DEVELOPMENT AUTHORITY

FILE	POCKET	FOLDER	NO.

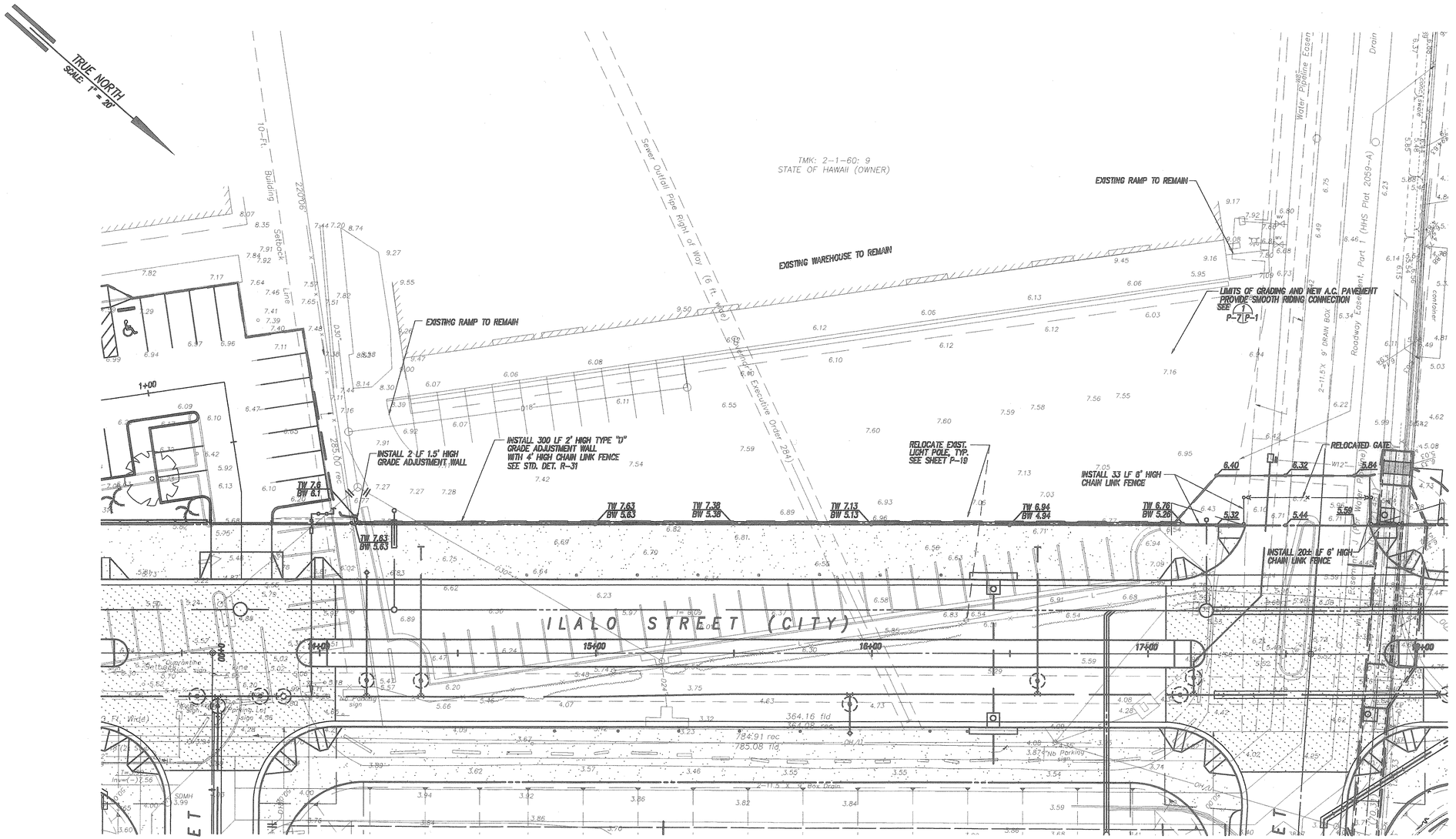

SITE LAYOUT AND GRADING PLAN

SCALE: 1" = 20'

GRAPHIC SCALE:

1"=20' 20 0 20 40

SCALE IN FEET

REVISION	DATE	DESCRIPTION	MADE BY	APPROVED

Planning – Engineering – Environmental Services – Photogrammetry – Surveying – Construction Management
R. M. TOWILL CORPORATION
808 842 1133 420 Waiakamilo Road Suite 411 Honolulu Hawaii 96817-4941

GREG H. HIYAKUMOTO LICENSED PROFESSIONAL ENGINEER No. 6652-C HAWAII, U.S.A.

THIS WORK WAS PREPARED BY ME OR UNDER MY SUPERVISION.

BY: _____
R.M. TOWILL CORPORATION

HAWAII COMMUNITY DEVELOPMENT AUTHORITY
STATE OF HAWAII
HONOLULU, HAWAII

KAKA'AKO COMMUNITY DEVELOPMENT DISTRICT
IMPROVEMENT DISTRICT 9
ILALO STREET IMPROVEMENTS

PROPERTY MODIFICATIONS-7
TMK: 2-1-60:09

ENGINEER: LSY
DRAFTSMAN: BN
CHECKED BY: GH
DATE: AUGUST 2, 2000

EXECUTIVE DIRECTOR, HAWAII COMMUNITY DEVELOPMENT AUTHORITY

"RECORD DRAWINGS"

FILE	POCKET	FOLDER	NO.

EXIST. MAINTENANCE SHED

TMK: 2-1-60:09
STATE OF HAWAII

TRUE NORTH
1" = 20'

NEW 6" GRAVITY SEWERLINE

CUT & PLUG EXIST. 48" DRAIN. REMOVE PORTION OF EXIST. 48" DRAIN.

NEW EONE 2014 DUPLEX PUMP SEE DETAIL 11 / P-7A | P-7C

NEW DUPLEX ALARM/ DISCONNECT PANEL MOUNTED ON POST SEE DETAIL 9 / P-7A | P-7C

EXIST. 15" SEWERLINE (TO REMAIN)

Water Pipeline Easement (15-Ft Wide)

Sewer Easement (10 ft. Wide)

EXIST. ℄

FUTURE R/W

TMK: 2-1-60:07
HAWAII COMMUNITY DEVELOPMENT AUTHORITY

2- 2" 1/8 BEND

DEFLECT

COOKE STREET (FUTURE)

TMK: 2-1-60:10
HAWAII COMMUNITY DEVELOPMENT AUTHORITY

EXIST. ℄

℄ DRIVEWAY "A"
STA. 2+76.73
O/S 109.36' RT.
TOP = 6.70
INV. = ~~(-)35.15~~ (6"S) (-)3.98
INV. = ~~(-)35.15~~ (EX. 15" & 8"S)
RECHANNELIZE BASE (-)3.98

CUT & PLUG EXIST. 15" SEWER

1-2"x 1 1/4" REDUCER

NEW 2" HDPE, DR 11 LPS MAIN 3' (MIN.) COVER

PORTION OF EXIST. 15" SEWER TO BE REMOVED BY OTHERS

CUT & PLUG EXIST. 18" DRAIN REMOVE PORTION OF EXIST. 18" DRAIN

1- 2" 1/8 BEND

Drainage Easement (30-ft Wide)

℄ ILALO ST.
STA. 10+76.79, O/S 67.08' LT.
SPECIAL DROP MANHOLE (PLASTIC LINED)
TOP = 5.8± (MATCH EX.)
INV. = 2.78 (2" LPS)
INV. = ~~(-)10.78±~~ (EX. 15"S)
SEE DETAIL 1 / P-7A | P-7B

CUT & PLUG EXIST. 15" SEWER

2- 2" 1/8 BEND

1- 2" 1/8 BEND

ILALO STREET (CITY)

℄ ILALO ST

DRIVEWAY "A" (PRIVATE)

KELIKOI STREET (STATE)

EXIST. COMFORT STATION

NOTES:
1. FOR SEWER CONSTRUCTION, SEE 6 / P-7A | P-7B AND 7 / P-7A | P-7B

SITE PLAN
SCALE: 1" = 20'

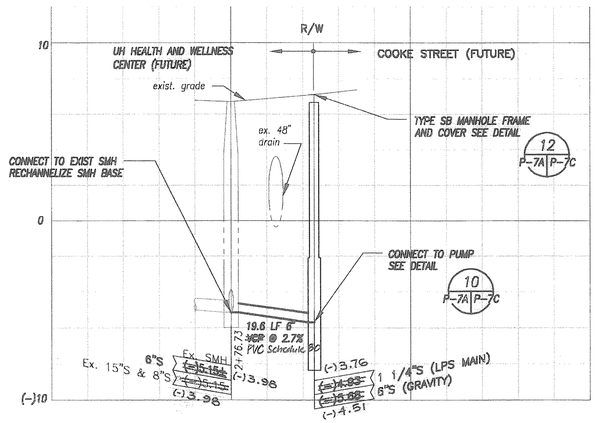

PROFILE: 6" SEWER LINE
SCALE: HOR: 1" = 20'
VERT: 1" = 4'

9 ADDED NEW SHEET

REVISION	DATE	DESCRIPTION	MADE BY	APPROVED
9	11/06/02	NEW SHEET, INSTALL EONE PUMP STA. IN PLACE OF PORTION OF EXIST. 15"S	JM/LY	

R. M. TOWILL CORPORATION
Planning - Engineering - Environmental Services - Photogrammetry - Surveying - Construction Management
808 842 1133 420 Waiakamilo Road Suite 411 Honolulu Hawaii 96817-4941

LYDIA S. YEE
LICENSED PROFESSIONAL ENGINEER
No. 8291-C
HAWAII, U.S.A.

THIS WORK WAS PREPARED BY ME OR UNDER MY SUPERVISION.

SIGNATURE
APRIL 30, 2004
DATE OF LICENSE EXPIRY

HAWAII COMMUNITY DEVELOPMENT AUTHORITY
STATE OF HAWAII
HONOLULU, HAWAII

KAKA'AKO COMMUNITY DEVELOPMENT DISTRICT
IMPROVEMENT DISTRICT 9
ILALO STREET IMPROVEMENTS

PROPERTY MODIFICATIONS
TMK: 2-1-60:07, 09 & 10
PUMP STATION LAYOUT

ENGINEER: JM/LY
DRAFTSMAN: JM
CHECKED BY:
DATE: 11/06/02

EXECUTIVE DIRECTOR, HAWAII COMMUNITY DEVELOPMENT AUTHORITY

FILE	POCKET	FOLDER	NO.

"RECORD DRAWINGS" P-7A SHEET OF SHEETS

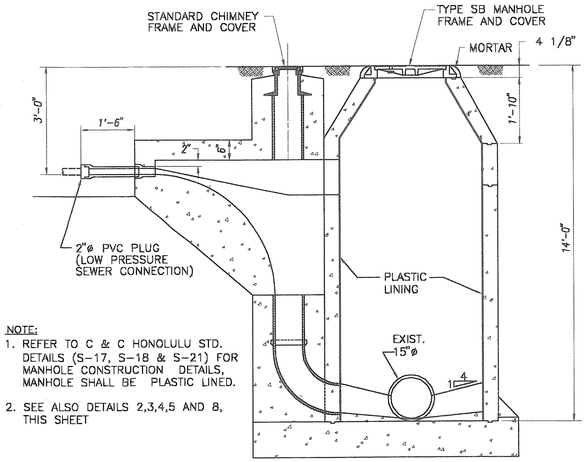

NOTE:
1. REFER TO C & C HONOLULU STD. DETAILS (S-17, S-18 & S-21) FOR MANHOLE CONSTRUCTION DETAILS, MANHOLE SHALL BE PLASTIC LINED.
2. SEE ALSO DETAILS 2,3,4,5 AND 8, THIS SHEET

1 P-7A | P-7B **SPECIAL DROP MANHOLE**
SCALE: 1/2"=1'-0"

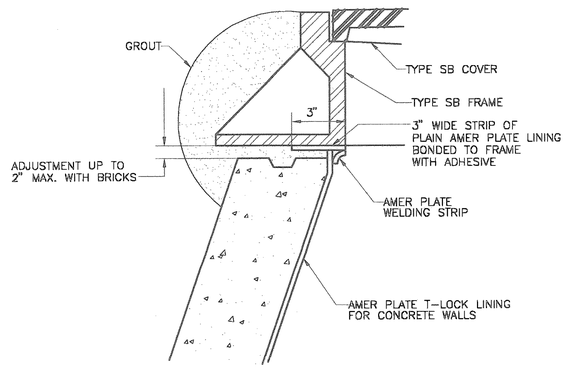

2 P-7A | P-7B **PLASTIC LINING DETAIL AT FRAME & COVER**
SCALE: 3"=1'-0"

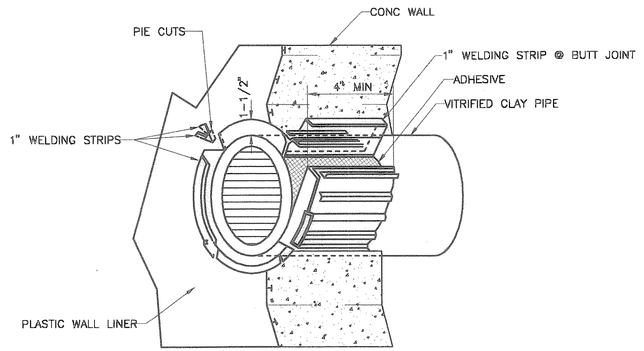

3 P-7A | P-7B **TYPICAL PLASTIC LINING DETAIL FOR V.C. PIPE**
SCALE: NOT TO SCALE

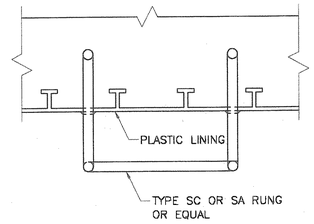

PLAN

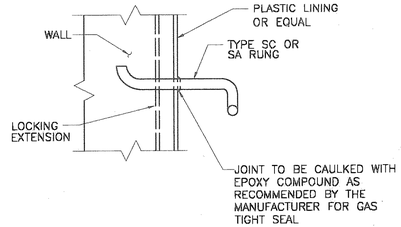

ELEVATION

4 P-7A | P-7B **TYPICAL LINING DETAIL AT MANHOLE RUNG**
SCALE: NOT TO SCALE

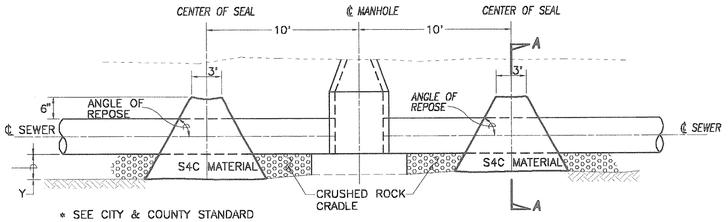

* SEE CITY & COUNTY STANDARD DETAILS, SHT. S-1, FOR DIMENSION

ELEVATION

NOTES:
1. SEALS SHALL BE PLACED 10 FT. UPSTREAM AND DOWNSTREAM FROM EACH MANHOLE.
2. THE CONTRACTOR SHALL COMPACT S4C MATERIAL BY PONDING AND DRAINING. UPON DRAINING, A VIBRATORY MACHINE SHALL BE USED UNTIL NO VISIBLE EVIDENCE OF FURTHER CONSOLIDATION EXISTS.

SEALS SHALL NOT BE PAID FOR SEPARATELY BUT SHALL BE CONSIDERED INCIDENTAL TO CRUSHED ROCK CRADLE.

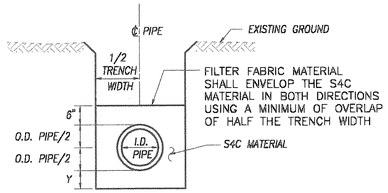

SECTION A-A

7 P-7A | P-7B **SEWER LINE SEAL AT MANHOLE**
NOT TO SCALE

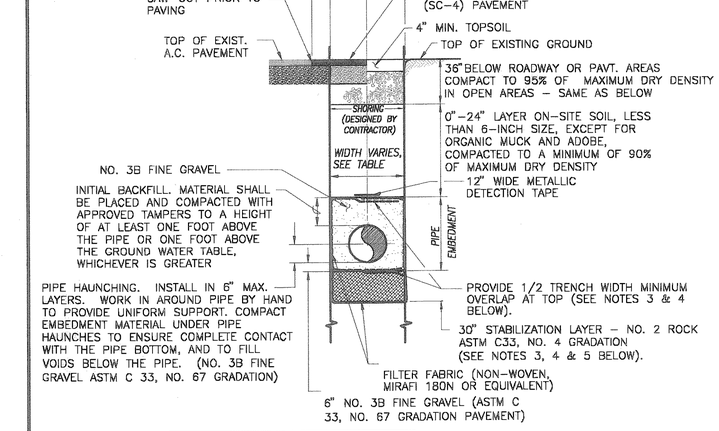

PIPE SIZE	TRENCH PAYMENT WIDTH
< 3"	12"
6"	24"
NOTE: THE MAXIMUM TRENCH WIDTH SHOULD NOT EXCEED THE MINIMUM TRENCH WIDTH BY 18"	

NOTES:
1. GRAVITY PIPES SHALL BE INSTALLED PER ASTM D2774 AND THE MANUFACTURER'S INSTALLATION INSTRUCTIONS.
2. PRESSURE PIPES SHALL BE INSTALLED PER ASTM D2774 AND THE MANUFACTURER'S INSTALLATION INSTRUCTIONS.
3. TO ENSURE PROPER PLACEMENT & OVERLAP OF FILTER FABRIC IN WET & SUBMERGE TRENCH CONDITIONS CONTRACTOR TO SEW SEAMS OF FILTER FABRIC DURING INSTALLATION
4. STABILIZATION LAYER SHALL BE COMPACTED WITH THE HOPTOE BUCKET PRIOR TO SEWING SEAMS. STABILIZATION LAYER SHALL BE PROVIDED ONLY WHEN DIRECTED BY THE CONSTRUCTION MANAGER.
5. THE CONTRACTOR SHALL NOTIFY THE CONSTRUCTION MANAGER WHEN SOFT OR LOOSE SOILS ARE ENCOUNTERED AT THE BOTTOM OF TRENCHES.

6 P-7A | P-7B **TYPICAL PIPE TRENCH FOR SEWER PIPE**
NOT TO SCALE

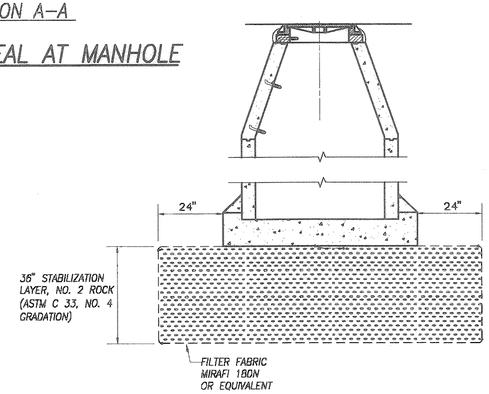

8 P-7A | P-7B **SEWER MANHOLE STABILIZATION LAYER**
NOT TO SCALE

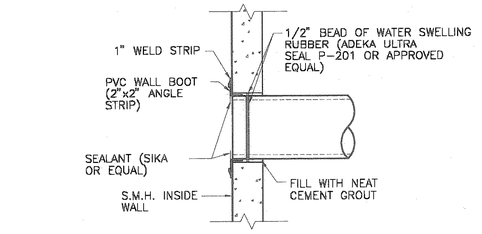

NOTE: SUBMIT DETAILED DRAWINGS OF THE PVC WALL BOOT INSTALLATION FOR REVIEW AND APPROVAL.

5 P-7A | P-7B **SECTION THRU MANHOLE WALL**
SCALE: 1"=1'0"

9 ADDED NEW SHEET

REVISION	DATE	DESCRIPTION	MADE BY	APPROVED
9	10/21/02	NEW SHEET	JM/LY	

Planning - Engineering - Environmental Services - Photogrammetry - Surveying - Construction Management
R. M. TOWILL CORPORATION
808 842 1133 420 Waiakamilo Road Suite 411 Honolulu Hawaii 96817-4941

LYDIA S. YEE LICENSED PROFESSIONAL ENGINEER No. 8231-C HAWAII, U.S.A.

THIS WORK WAS PREPARED BY ME OR UNDER MY SUPERVISION.

SIGNATURE — APRIL 30, 2004 DATE OF LICENSE EXPIRY

HAWAII COMMUNITY DEVELOPMENT AUTHORITY
STATE OF HAWAII
HONOLULU, HAWAII

KAKA'AKO COMMUNITY DEVELOPMENT DISTRICT
IMPROVEMENT DISTRICT 9
ILALO STREET IMPROVEMENTS
PROPERTY MODIFICATIONS
TMK: 2-1-60:07, 09 & 10
MISCELLANEOUS DETAILS 1

ENGINEER: JM/LY — CHECKED BY: LY
DRAFTSMAN: JM — DATE: 10/21/02

EXECUTIVE DIRECTOR, HAWAII COMMUNITY DEVELOPMENT AUTHORITY

FILE	POCKET	FOLDER	NO.

"RECORD DRAWINGS" P-7B SHEET OF SHEETS

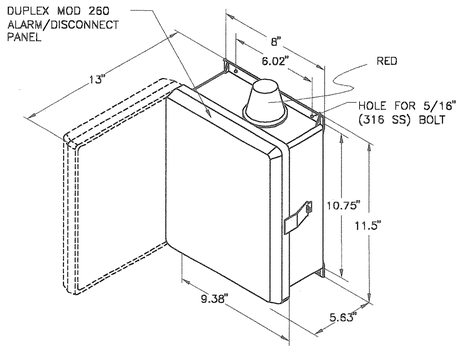

NOTES:

1. DUPLEX ALARM/DISCONNECT PANEL SHALL BE FURNISHED BY EONE CORPORATION.
2. ALARM PANEL SHALL INCLUDE A NEMA 4X ENCLOSURE WITH A HINGED, PAD LOCKABLE COVER SUITABLE FOR OUTDOOR WALL OR POLE MOUNTING.
3. ALARM PANEL SHALL BE EQUIPPED WITH AN AUDIBLE & VISUAL ALARM AND SINGULAR TELEPHONE NUMBER AUTODIALER PER MANUFACTURER.

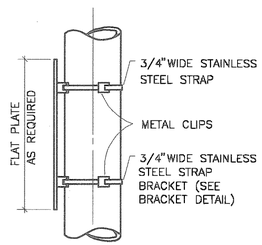

STRAP MOUNTING DETAIL

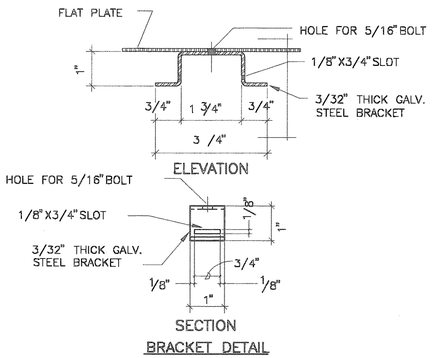

BRACKET DETAIL

ALARM PANEL INSTALLATION MUST MEET LATERAL AND HEIGHT CLEARANCES.

9 ALARM PANEL POST DETAIL
P-7A | P-7C NOT TO SCALE

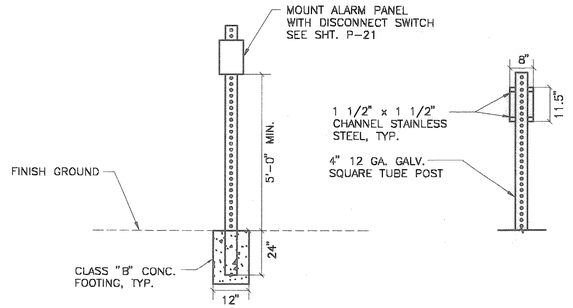

INSTALLATION OF ALARM PANEL POST

NOT TO SCALE

NOTES:

CONTRACTOR SHALL PROVIDE AND ADJUST RACK DESIGN AND DIMENSIONS TO PROVIDE SUPPORT IN ACCORDANCE WITH EQUIPMENT MANUFACTURER'S RECOMMENDATIONS.

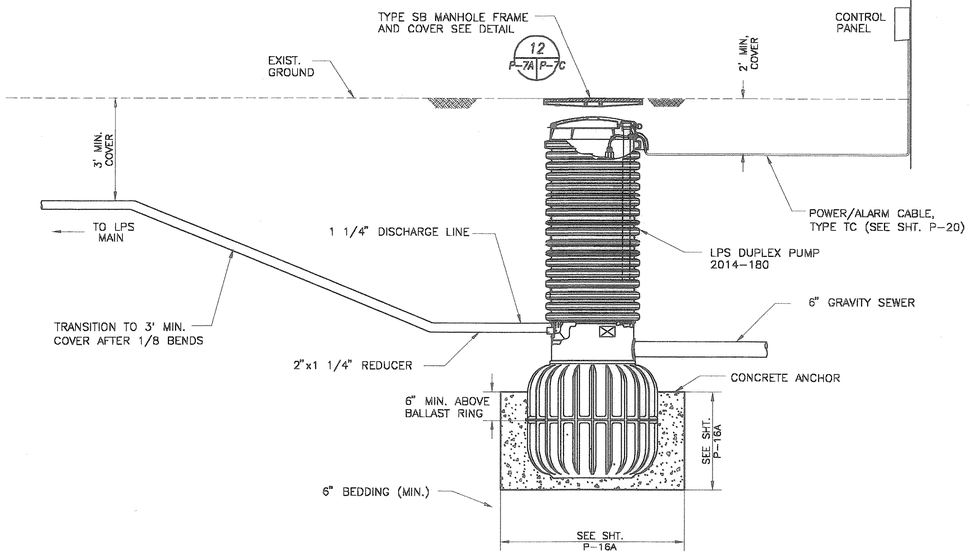

10 TYP. GRINDER PUMP INSTALLATION
P-7A | P-7C NOT TO SCALE

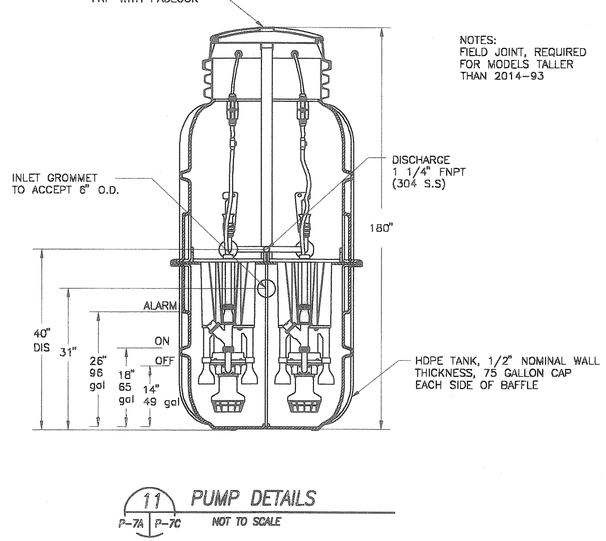

11 PUMP DETAILS
P-7A | P-7C NOT TO SCALE

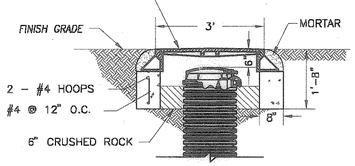

12 PUMP TOP DETAILS
P-7A | P-7C NOT TO SCALE

9 ADDED NEW SHEET

REVISION	DATE	DESCRIPTION	MADE BY	APPROVED
9	10/21/02	NEW SHEET	JM/LY	

Planning - Engineering - Environmental Services - Photogrammetry - Surveying - Construction Management
R. M. TOWILL CORPORATION
808 842 1133 420 Waiakamilo Road Suite 411 Honolulu Hawaii 96817-4941

LYDIA S. YEE
LICENSED PROFESSIONAL ENGINEER
No. 8281-C
HAWAII, U.S.A.

THIS WORK WAS PREPARED BY ME OR UNDER MY SUPERVISION.

SIGNATURE — APRIL 30, 2004 DATE OF LICENSE EXPIRY

HAWAII COMMUNITY DEVELOPMENT AUTHORITY
STATE OF HAWAII
HONOLULU, HAWAII

KAKA'AKO COMMUNITY DEVELOPMENT DISTRICT
IMPROVEMENT DISTRICT 9
ILALO STREET IMPROVEMENTS

PROPERTY MODIFICATIONS
TMK: 2-1-60:07, 09 & 10
MISCELLANEOUS DETAILS 2

ENGINEER: JM/LY CHECKED BY: LY
DRAFTSMAN: JM DATE: 10/21/02

EXECUTIVE DIRECTOR, HAWAII COMMUNITY DEVELOPMENT AUTHORITY

"RECORD DRAWINGS" P-7C SHEET OF SHEETS

FILE	POCKET	FOLDER	NO.

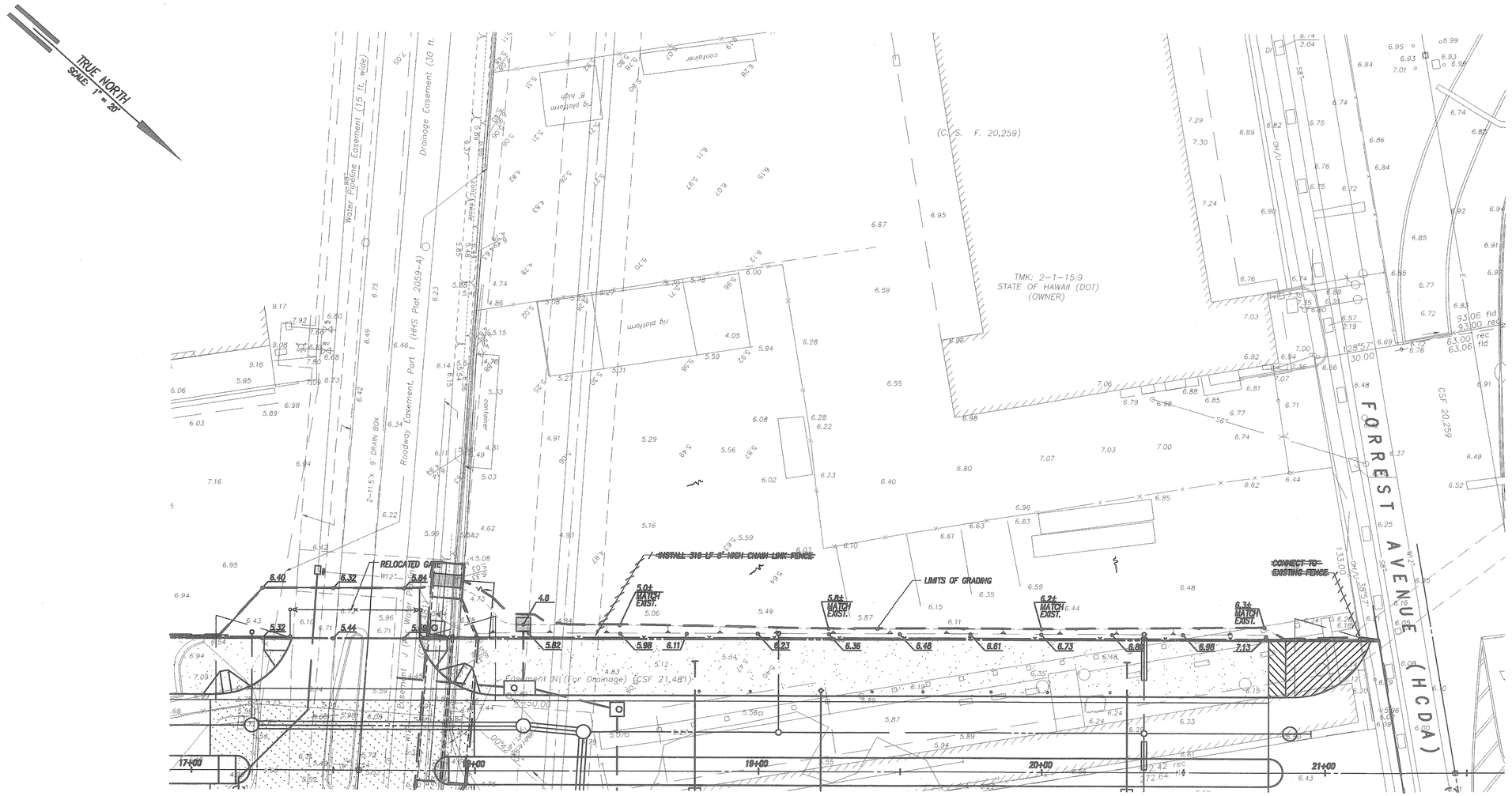

SITE LAYOUT AND GRADING PLAN

SCALE: 1" = 20'

GRAPHIC SCALE:

1"=20'

20 0 20 40

SCALE IN FEET

REVISION	DATE	DESCRIPTION	MADE BY	APPROVED

Planning – Engineering – Environmental Services – Photogrammetry – Surveying – Construction Management

R. M. TOWILL CORPORATION

808 842 1133 420 Waiakamilo Road Suite 411 Honolulu Hawaii 96817-4941

GREG H. HIYAKUMOTO LICENSED PROFESSIONAL ENGINEER No. 6662-C HAWAII, U.S.A.

THIS WORK WAS PREPARED BY ME OR UNDER MY SUPERVISION.

BY: _____ 8/3/00
R. M. TOWILL CORPORATION

HAWAII COMMUNITY DEVELOPMENT AUTHORITY
STATE OF HAWAII
HONOLULU, HAWAII

KAKA'AKO COMMUNITY DEVELOPMENT DISTRICT
IMPROVEMENT DISTRICT 9
ILALO STREET IMPROVEMENTS

PROPERTY MODIFICATIONS-8
TMK: 2-1-15:09 por.

ENGINEER: LSY CHECKED BY: GH
DRAFTSMAN: BN DATE: AUGUST 2, 2000

EXECUTIVE DIRECTOR, HAWAII COMMUNITY DEVELOPMENT AUTHORITY

"RECORD DRAWINGS" P-8 SHEET 128 OF 140 SHEETS

FILE	POCKET	FOLDER	NO.

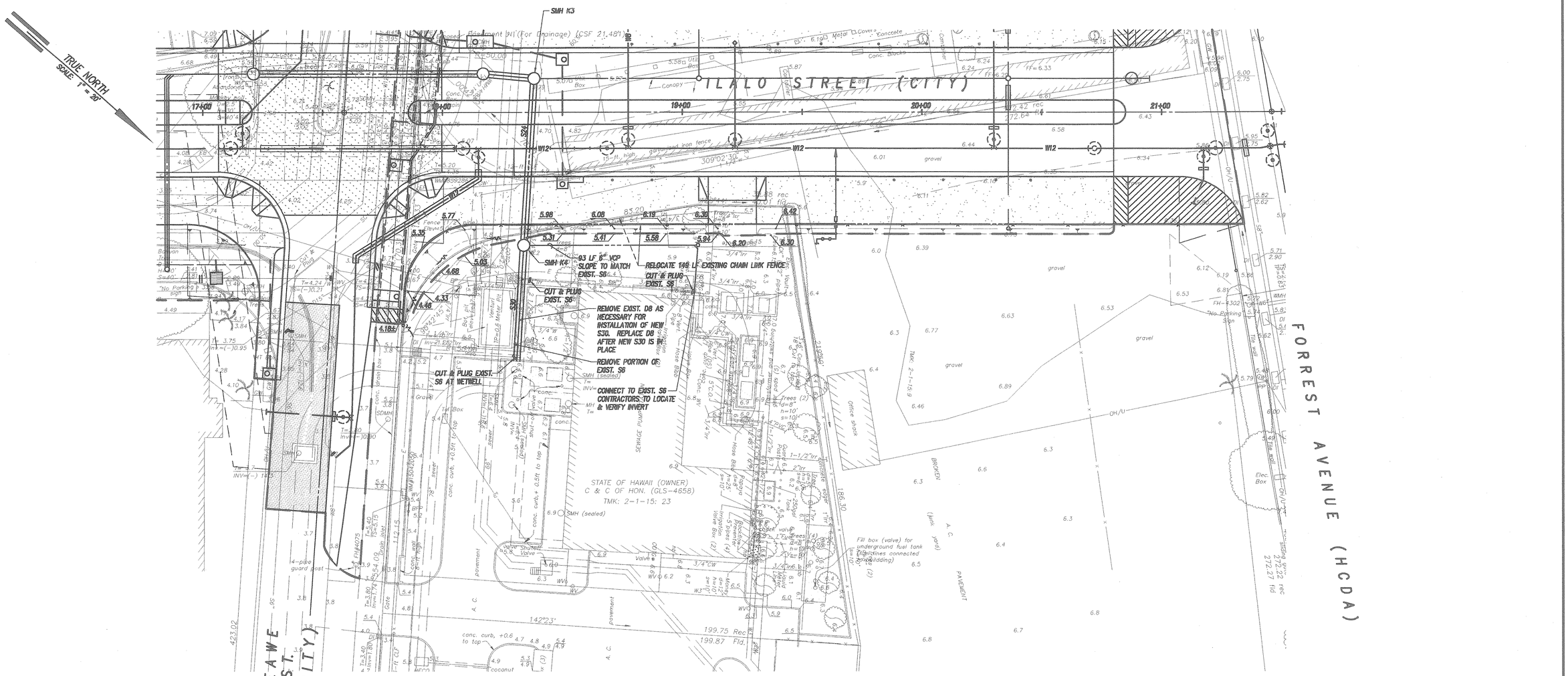

SITE LAYOUT AND GRADING PLAN

SCALE: 1" = 20'

REVISION	DATE	DESCRIPTION	MADE BY	APPROVED

Planning – Engineering – Environmental Services – Photogrammetry – Surveying – Construction Management
R. M. TOWILL CORPORATION
808 842 1133 420 Waiakamilo Road Suite 411 Honolulu Hawaii 96817-4941

APPROVED: Dennis M. Nishimura, Chief, Wastewater Branch, DPP

DATE: 7/25/00

1"=20'

GRAPHIC SCALE: 20 0 20 40 SCALE IN FEET

GREG H. HIYAKUMOTO LICENSED PROFESSIONAL ENGINEER No. 6662-C HAWAII, U.S.A.

THIS WORK WAS PREPARED BY ME OR UNDER MY SUPERVISION.

BY: R. M. TOWILL CORPORATION

HAWAII COMMUNITY DEVELOPMENT AUTHORITY
STATE OF HAWAII
HONOLULU, HAWAII

KAKA'AKO COMMUNITY DEVELOPMENT DISTRICT
IMPROVEMENT DISTRICT 9
ILALO STREET IMPROVEMENTS

PROPERTY MODIFICATIONS-9
TMK: 2-1-15: 23

ENGINEER: LSY
DRAFTSMAN: LSY
CHECKED BY: GH
DATE: JULY 21, 2000

EXECUTIVE DIRECTOR, HAWAII COMMUNITY DEVELOPMENT AUTHORITY

FILE	POCKET	FOLDER	NO.

"RECORD DRAWINGS" P-8A SHEET 129 OF 140 SHEETS

GENERAL:

A. WORKMANSHIP AND MATERIALS SHALL CONFORM TO THE BUILDING CODE OF THE CITY AND COUNTY OF HONOLULU (AMENDED UBC, 1994 EDITION). HOWEVER, WHERE REFERENCE IS MADE TO PERFORMANCE CONFORMING TO OTHER STANDARDS THE MORE STRINGENT SHALL APPLY.

B. THE CONTRACTOR SHALL COMPARE ALL THE CONTRACT DOCUMENTS WITH EACH OTHER AND REPORT IN WRITING TO THE CONSTRUCTION MANAGER ALL INCONSISTENCIES AND OMISSIONS.

C. THE CONTRACTOR SHALL TAKE FIELD MEASUREMENTS AND VERIFY FIELD CONDITIONS AND SHALL COMPARE SUCH FIELD MEASUREMENTS AND CONDITIONS WITH THE DRAWINGS BEFORE COMMENCING WORK. REPORT IN WRITING TO THE CONSTRUCTION MANAGER ALL INCONSISTENCIES AND OMISSIONS.

D. THE CONTRACTOR SHALL BE RESPONSIBLE FOR COORDINATING THE WORK OF ALL TRADES.

E. THE CONTRACTOR SHALL BE RESPONSIBLE FOR METHODS OF CONSTRUCTION, WORKMANSHIP AND JOB SAFETY. THE CONTRACTOR SHALL PROVIDE TEMPORARY SHORING AND BRACING AS REQUIRED FOR STABILITY OF STRUCTURAL MEMBERS AND SYSTEMS.

F. THE CONTRACTOR SHALL BE RESPONSIBLE FOR PROTECTION OF THE ADJACENT PROPERTIES, STRUCTURES, STREETS AND UTILITIES DURING THE CONSTRUCTION PERIOD.

G. DETAILS NOTED AS TYPICAL ON THE STRUCTURAL DRAWINGS SHALL APPLY IN ALL CONDITIONS UNLESS SPECIFICALLY SHOWN OR NOTED.

DESIGN CRITERIA:

A. SEISMIC ZONE 2A

B. BASIC WIND SPEED AND EXPOSURE _____ 80 MPH, EXPOSURE C

C. DESIGN LIVE LOADS
   a. ROOF _____ 20 PSF
   b. LIGHT STORAGE _____ 125 PSF

D. ALLOWABLE FOUNDATION BEARING CAPACITIES
   a. DEAD LOAD + LIVE LOAD _____ 2,500 PSF
   b. DEAD LOAD + LIVE LOAD + LATERAL LOAD _____ 3,333 PSF

FOUNDATION:

A. CONTRACTOR SHALL PROVIDE FOR DE-WATERING OF EXCAVATION FROM SURFACE WATER, GROUND WATER OR SEEPAGE.

B. CONTRACTOR SHALL PROVIDE FOR DESIGN AND INSTALLATION OF ALL CRIBBING, SHEETING, AND SHORING NECESSARY TO PRESERVE EXCAVATIONS AND EARTH BANKS.

C. EXCAVATIONS FOR FOOTINGS SHALL BE OBSERVED BY THE GEOTECHNICAL CONSTRUCTION MANAGER PRIOR TO PLACEMENT OF CONCRETE AND REINFORCING.

D. EXCAVATIONS SHALL BE BACKFILLED WITH NON-EXPANSIVE, SELECT GRANULAR MATERIAL, PLACED IN LEVEL LIFTS NOT EXCEEDING 8 INCHES IN LOOSE THICKNESS, MOISTURE-CONDITIONED TO ABOVE THE OPTIMUM MOISTURE CONTENT, AND COMPACTED TO A MINIMUM 95 PERCENT RELATIVE COMPACTION.

CONCRETE:

A. CONCRETE CONSTRUCTION SHALL CONFORM TO AMERICAN CONCRETE INSTITUTE ACI 318R-89.

B. CONCRETE SHALL BE REGULAR WEIGHT HARD ROCK CONCRETE AND SHALL HAVE THE FOLLOWING MINIMUM 28 DAY COMPRESSIVE STRENGTHS:
   a. ALL CONCRETE _____ 3,000 PSI

C. CONCRETE DELIVERY TICKETS SHALL RECORD ALL FREE WATER IN THE MIX: AT BATCHING BY PLANT, FOR CONSISTENCY BY DRIVER, AND ANY ADDITIONAL REQUEST BY CONTRACTOR IF PERMITTED BY THE MIX DESIGN.

D. ALL INSERTS, ANCHOR BOLTS, PLATES, AND OTHER ITEMS TO BE CAST IN THE CONCRETE SHALL BE HOT-DIPPED GALVANIZED UNLESS OTHERWISE NOTED.

E. REINFORCING BARS, ANCHOR BOLTS, INSERTS, AND OTHER ITEMS TO BE CAST IN THE CONCRETE SHALL BE SECURED IN POSITION PRIOR TO PLACEMENT OF CONCRETE.

F. CONDUITS, PIPES, AND SLEEVES PASSING THROUGH A SLAB OR FOOTING AND NOT CONFORMING TO TYPICAL DETAILS SHALL BE LOCATED AND SUBMITTED TO THE CONSTRUCTION MANAGER FOR APPROVAL.

G. CONDUITS, PIPES, AND SLEEVES EMBEDDED WITHIN A SLAB OR WALL (OTHER THAN THOSE MERELY PASSING THROUGH) SHALL BE:
   a. NO LARGER IN OUTSIDE DIMENSIONS THAN ONE THIRD THE OVERALL SLAB OR WALL THICKNESS IN WHICH THEY ARE EMBEDDED.
   b. PLACED IN THE MIDDLE ONE THIRD OF SLAB OR WALL THICKNESS
   c. SPACED NO CLOSER THAN THREE DIAMETERS OR WIDTHS ON CENTER.

H. CONDUITS, PIPES, AND SLEEVES SHALL NOT BE PLACED THROUGH OR EMBEDDED IN A BEAM UNLESS SPECIFICALLY DETAILED.

I. THE CONTRACTOR SHALL LOCATE CONSTRUCTION JOINTS SO AS NOT TO IMPAIR THE STRENGTH OF THE STRUCTURE AND TO MINIMIZE SHRINKAGE STRESSES. SUBMIT LOCATION OF CONSTRUCTION JOINTS TO THE CONSTRUCTION MANAGER FOR APPROVAL, UNLESS OTHERWISE NOTED.

J. NON-SHRINK GROUT SHALL BE A PREMIXED NON-METALLIC FORMULA, CAPABLE OF DEVELOPING A MINIMUM COMPRESSIVE STRENGTH OF 3,000 PSI IN 1 DAY AND 5,000 PSI IN 28 DAYS.

REINFORCING STEEL:

A. REINFORCING STEEL SHALL BE DEFORMED BARS CONFORMING TO ASTM A615, GRADE 60.

B. CLEAR CONCRETE COVER FOR REINFORCING BARS SHALL BE AS FOLLOWS, UNLESS OTHERWISE NOTED:
   a. FOOTINGS, GRADE BEAMS, ETC. CAST AGAINST EARTH _____ 3"
   b. FOOTINGS, GRADE BEAMS, ETC. FORMED AND EXPOSED TO EARTH OR WEATHER _____ 2"

C. CLEAR DISTANCE BETWEEN THE SURFACE OF A BAR AND ANY SURFACE OF A MASONRY UNIT SHALL BE NOT LESS THAN 1/2 INCH, UNLESS OTHERWISE NOTED.

D. REINFORCING STEEL SHALL BE SPLICED WHERE INDICATED ON PLANS. PROVIDE LAP SPLICE LENGTH PER TYPICAL DETAILS AND SCHEDULE, UNLESS OTHERWISE NOTED.

E. MECHANICAL SPLICE CONNECTORS SHALL DEVELOP IN TENSION 125 PERCENT OF THE SPECIFIED MINIMUM YIELD STRENGTH OF REINFORCING BARS.

F. BAR BENDS AND HOOKS SHALL BE "STANDARD HOOKS" IN ACCORDANCE WITH ACI 318.

COLD-FORMED STEEL PURLINS:

A. FABRICATION AND ERECTION OF GAGE METAL STRUCTURES SHALL BE IN ACCORDANCE WITH THE AMERICAN IRON AND STEEL INSTITUTE SPECIFICATIONS, LATEST EDITION.

B. COLD-FORMED STEEL PURLINS AND ACCESSORIES SHALL BE OF THE TYPE AND GAGE CALLED FOR ON THE CONTRACT DOCUMENTS.

C. PURLINS SHALL SPAN OVER TWO OR MORE SUPPORTS.

D. COLD-FORMED STEEL PURLINS SHALL MEET THE REQUIREMENTS OF ASTM A 570. MINIMUM YIELD STRENGTH OF STEEL SHALL BE 55,000 PSI.

E. COLD FORMED STEEL PURLINS SHALL HAVE THE FOLLOWING MINIMUM SECTION PROPERTIES:
   a. Z-PURLIN: I_{xx} = 28.50 IN^4, S_{xx} = 5.70 IN^3
   b. EAVE STRUT: I_{xx} = 29.56 IN^4, S_{xx} = 5.06 IN^3

F. CONTRACTOR SHALL SUBMIT SHOP DRAWINGS TO THE CONSTRUCTION MANAGER FOR APPROVAL PRIOR TO FABRICATION. SHOP DRAWINGS SHALL INDICATE LAYOUT, FRAMING AND SUPPORTS WITH DIMENSIONS, SECTIONS, TYPE AND LOCATION OF ATTACHMENTS AND DETAILS OF ACCESSORIES.

METAL ROOFING:

A. ROOFING SHALL BE 22 GAGE GALVANIZED STEEL PANELS, PREFINISHED ON THE TOP.

B. ROOFING AND ALL ACCESSORIES SHALL BE FORMED FROM STEEL SHEETS HAVING MINIMUM YIELD STRENGTH OF 33 KSI AND CONFORMING TO ASTM A653, SQ33, G90.

C. THE MINIMUM BEARING OF ROOFING ON SUPPORTS SHALL BE 2 INCHES.

D. PROVIDE ALL CLOSURES AS REQUIRED TO COMPLETE THE WORK AND MAKE WATERTIGHT. OPEN ENDS OF ALL RIBS SHALL BE CLOSED WITH NEOPRENE OR RUBBER FILLER STRIPS.

E. METAL ROOFING, INCLUDING ITS ATTACHMENTS AND ACCESSORIES, SHALL BE CAPABLE OF RESISTING A 24 PSF WIND UPLIFT FORCE.

F. SUBMIT STRUCTURAL CALCULATIONS CERTIFIED BY A STRUCTURAL ENGINEER LICENSED TO PRACTICE IN THE STATE OF HAWAII.

PRE-ENGINEERED METAL BUILDINGS:

A. DESIGN OF THE PRE-ENGINEERED BUILDING SHALL CONFORM TO THE 1994 UNIFORM BUILDING CODE AS ADOPTED AND/OR AMENDED BY THE CITY AND COUNTY OF HONOLULU OR THE METAL BUILDING MANUFACTURER'S ASSOCIATION (MBMA) "DESIGN PRACTICES MANUAL", WHICHEVER IS MORE RESTRICTIVE.

B. SHOP DRAWINGS AND CALCULATIONS SHALL BE SUBMITTED TO THE CONSTRUCTION MANAGER FOR APPROVAL A MINIMUM OF FOUR (4) WEEKS PRIOR TO FABRICATION. THESE DRAWINGS AND CALCULATIONS SHALL BE STAMPED AND SIGNED BY A STRUCTURAL ENGINEER REGISTERED TO PRACTICE IN THE STATE OF HAWAII.

C. BASIC DESIGN LOADS:
   a. DEAD LOADS INCLUDE STRUCTURAL FRAMING, SECONDARY FRAMING AND ELECTRICAL LOADS.
   b. ROOF LIVE LOAD _____ 20 PSF
   c. WIND LOADS
      EXPOSURE C
      BASIC WIND SPEED _____ 80 MPH
   d. SEISMIC LOADS _____ ZONE 2A

REVISION	DATE	DESCRIPTION	MADE BY	APPROVED

Planning - Engineering - Environmental Services - Photogrammetry - Surveying - Construction Management
R. M. TOWILL CORPORATION
808 842 1133 420 Waiakamilo Road Suite 411 Honolulu Hawaii 96817-4941

KEN KAZUO HAYASHIDA
LICENSED PROFESSIONAL ENGINEER
No. 6816-S
HAWAII, U.S.A.

THIS WORK WAS PREPARED BY ME OR UNDER MY SUPERVISION.

HAWAII COMMUNITY DEVELOPMENT AUTHORITY
STATE OF HAWAII
HONOLULU, HAWAII

KAKA'AKO COMMUNITY DEVELOPMENT DISTRICT
IMPROVEMENT DISTRICT 9
ILALO STREET IMPROVEMENTS

PROPERTY MODIFICATIONS CARPORT - GENERAL NOTES

ENGINEER: SK CHECKED BY: KKH
DRAFTSMAN: DO, DA, KS DATE: JULY 25, 2000

EXECUTIVE DIRECTOR, HAWAII COMMUNITY DEVELOPMENT AUTHORITY

"RECORD DRAWINGS"

FILE	POCKET	FOLDER	NO.

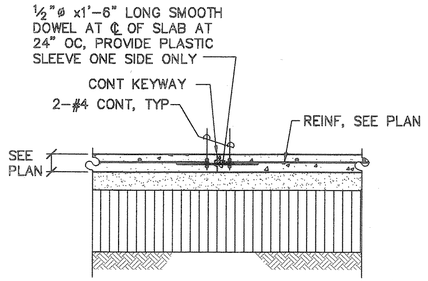

CONSTRUCTION JOINT

1 / P-10 TYPICAL SLAB JOINT DETAIL

NO SCALE

MINIMUM SPLICE & EMBEDMENT LENGTHS					
CONCRETE STRENGTH = 3,000 PSI					
BAR SIZE	LAP SPLICE		EMBEDMENT		
	BOT BAR OR WALL BAR	TOP BAR	STRAIGHT		W/ STD HOOK
			BOT BAR OR WALL BAR	TOP BAR	
#3, #4	24"	28"	17"	22"	8"
#5	28"	36"	21"	27"	10"
#6	32"	42"	25"	32"	12"
#7	38"	50"	29"	38"	14"
#8	44"	56"	33"	43"	16"
#9	48"	64"	37"	48"	18"
#10	58"	76"	45"	58"	20"
#11	72"	93"	55"	71"	22"

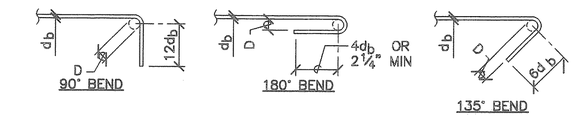

D = $6d_b$ FOR #8 AND SMALLER
D = $8d_b$ FOR #9 TO #11

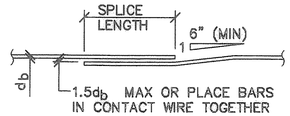

BAR LAP

NOTE:

1. LENGTH ARE FOR CONCRETE WITH REBAR SPACED 6 BAR DIAMETERS MIN OC. INCREASE BAR LENGTH 25% FOR BARS SPACED LESS THAN 6 BAR DIAMETERS OC.
2. "TOP BARS" ARE HORIZONTAL BARS WITH 12" OR MORE OF CONCRETE CAST BELOW.

2 / P-10 TYPICAL REBAR SPLICE AND EMBEDMENT LENGTH SCHEDULE

NO SCALE

REVISION	DATE	DESCRIPTION	MADE BY	APPROVED

Planning - Engineering - Environmental Services - Photogrammetry - Surveying - Construction Management
R. M. TOWILL CORPORATION
808 842 1133 420 Waiakamilo Road Suite 411 Honolulu Hawaii 96817-4941

KEN KAZUO HAYASHIDA
LICENSED PROFESSIONAL ENGINEER
No. 6818-S
HAWAII, U.S.A.

THIS WORK WAS PREPARED BY ME OR UNDER MY SUPERVISION.

HAWAII COMMUNITY DEVELOPMENT AUTHORITY
STATE OF HAWAII
HONOLULU, HAWAII

KAKA'AKO COMMUNITY DEVELOPMENT DISTRICT
IMPROVEMENT DISTRICT 9
ILALO STREET IMPROVEMENTS

PROPERTY MODIFICATIONS CARPORT - TYPICAL DETAILS

ENGINEER: SK
DRAFTSMAN: DO, DA, KS
CHECKED BY: KKH
DATE: JULY 25, 2000

EXECUTIVE DIRECTOR, HAWAII COMMUNITY DEVELOPMENT AUTHORITY

FILE	POCKET	FOLDER	NO.

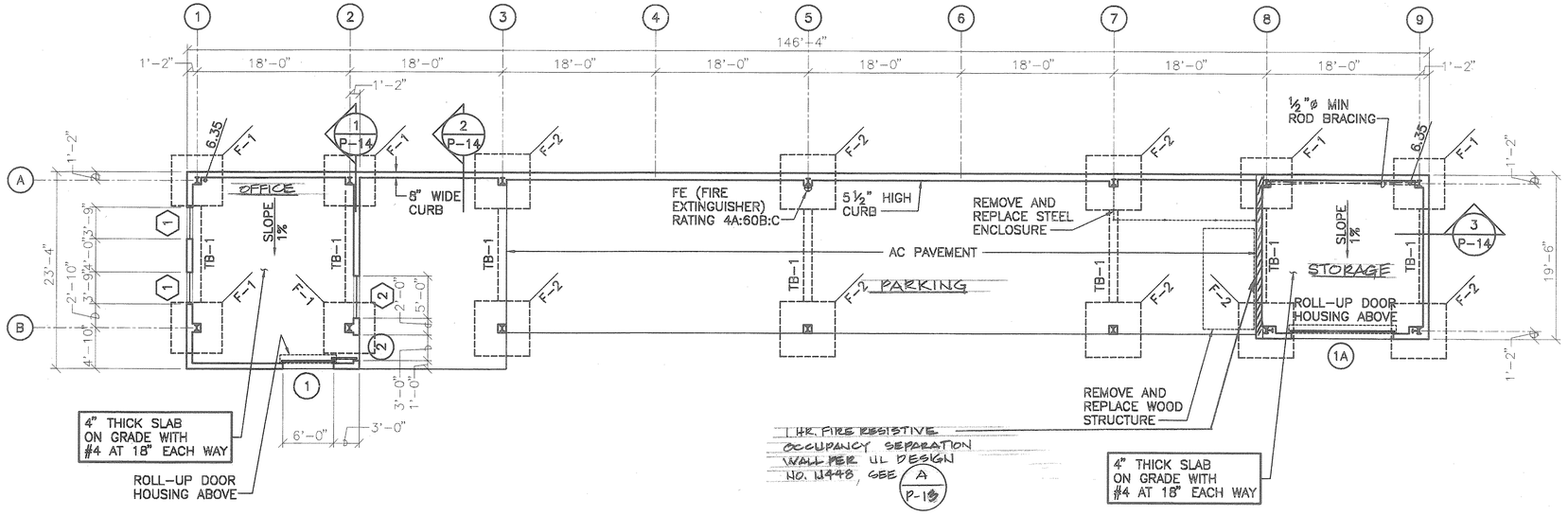

FOUNDATION PLAN

SCALE: 1/8"=1'-0"

NOTES:

1. SEE FOUNDATION NOTES ON SHEET P-9 FOR FOOTING AND SLAB ON GRADE PREPARATION.
2. THICKNESS OF SLABS ON GRADE IS MINIMUM AND SHALL BE MAINTAINED AT ALL SLOPED AREAS.

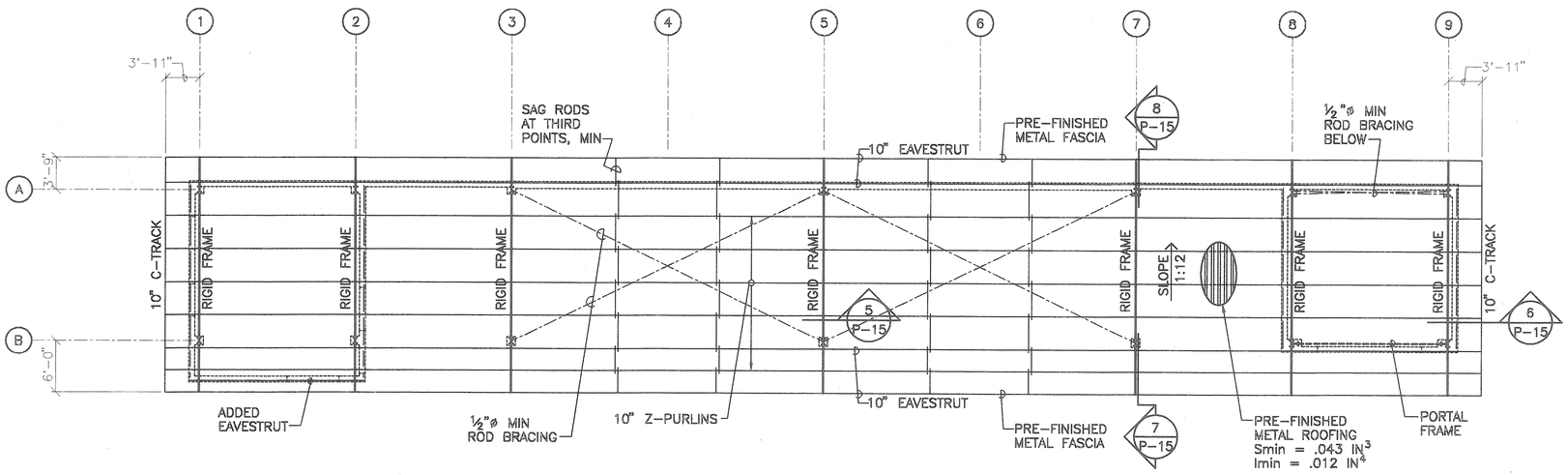

ROOF FRAMING PLAN

SCALE: 1/8"=1'-0"

REVISION	DATE	DESCRIPTION	MADE BY	APPROVED

Planning - Engineering - Environmental Services - Photogrammetry - Surveying - Construction Management
R. M. TOWILL CORPORATION
808 842 1133 420 Waiakamilo Road Suite 411 Honolulu Hawaii 96817-4941

KEN KAZUO HAYASHIDA LICENSED PROFESSIONAL ENGINEER No. 6818-S HAWAII, U.S.A.

THIS WORK WAS PREPARED BY ME OR UNDER MY SUPERVISION.

HAWAII COMMUNITY DEVELOPMENT AUTHORITY
STATE OF HAWAII
HONOLULU, HAWAII

KAKA'AKO COMMUNITY DEVELOPMENT DISTRICT
IMPROVEMENT DISTRICT 9
ILALO STREET IMPROVEMENTS

PROPERTY MODIFICATIONS CARPORT – FOUNDATION AND ROOF FRAMING PLAN

ENGINEER: SK CHECKED BY: KKH
DRAFTSMAN: DO, DA, KS DATE: JULY 25, 2000

EXECUTIVE DIRECTOR, HAWAII COMMUNITY DEVELOPMENT AUTHORITY

FILE	POCKET	FOLDER	NO.

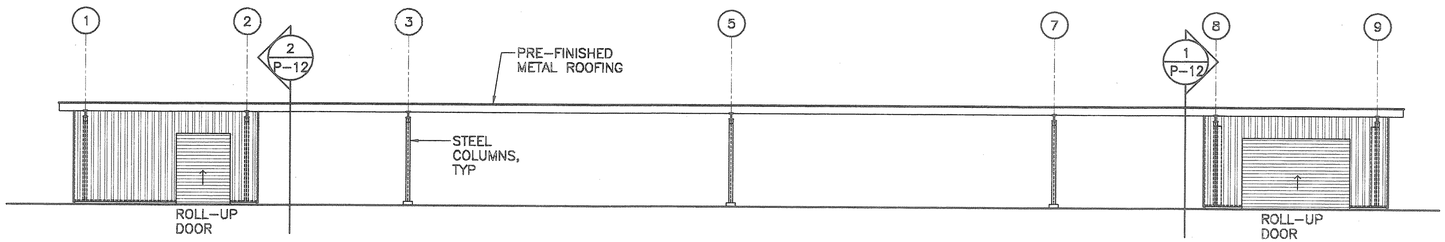

FRONT ELEVATION
SCALE: 1/8"=1'–0"

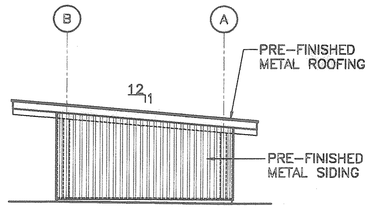

LEFT ELEVATION
SCALE: 1/8"=1'–0"

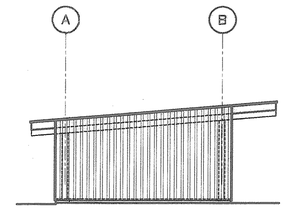

RIGHT INTERIOR
ELEVATION AT GRID 8
1
P–12
SCALE: 1/8"=1'–0"

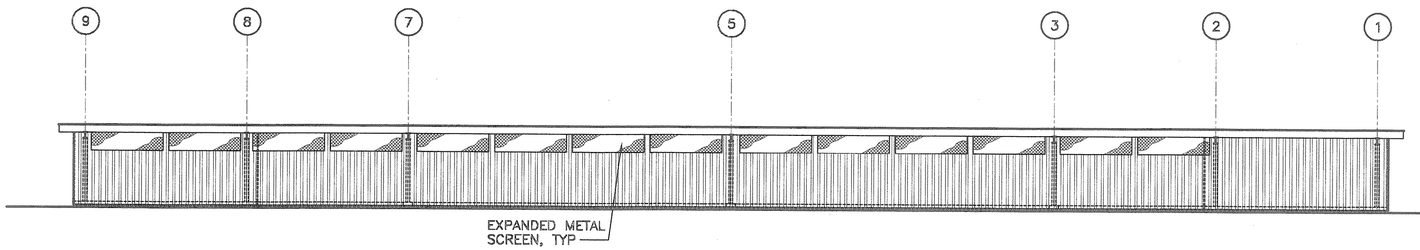

REAR ELEVATION
SCALE: 1/8"=1'–0"

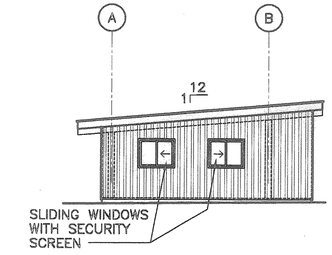

RIGHT ELEVATION
SCALE: 1/8"=1'–0"

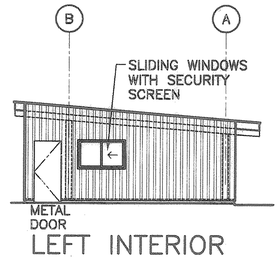

LEFT INTERIOR
ELEVATION AT GRID 2
2
P–12
SCALE: 1/8" = 1'–0"

REVISION	DATE	DESCRIPTION	MADE BY	APPROVED

Planning – Engineering – Environmental Services – Photogrammetry – Surveying – Construction Management
R. M. TOWILL CORPORATION
808 842 1133 420 Waiakamilo Road Suite 411 Honolulu Hawaii 96817–4941

KEN KAZUO HAYASHIDA
LICENSED PROFESSIONAL ENGINEER
No. 6818–S
HAWAII, U.S.A.

THIS WORK WAS PREPARED BY ME OR UNDER MY SUPERVISION.

HAWAII COMMUNITY DEVELOPMENT AUTHORITY
STATE OF HAWAII
HONOLULU, HAWAII

KAKA'AKO COMMUNITY DEVELOPMENT DISTRICT

IMPROVEMENT DISTRICT 9

ILALO STREET IMPROVEMENTS

PROPERTY MODIFICATIONS CARPORT – BUILDING ELEVATIONS

ENGINEER: SK
DRAFTSMAN: DO, DA, KS
CHECKED BY: KKH
DATE: JULY 25, 2000

EXECUTIVE DIRECTOR, HAWAII COMMUNITY DEVELOPMENT AUTHORITY

FILE	POCKET	FOLDER	NO.

"RECORD DRAWINGS" P–12 SHEET 133 OF 140 SHEETS

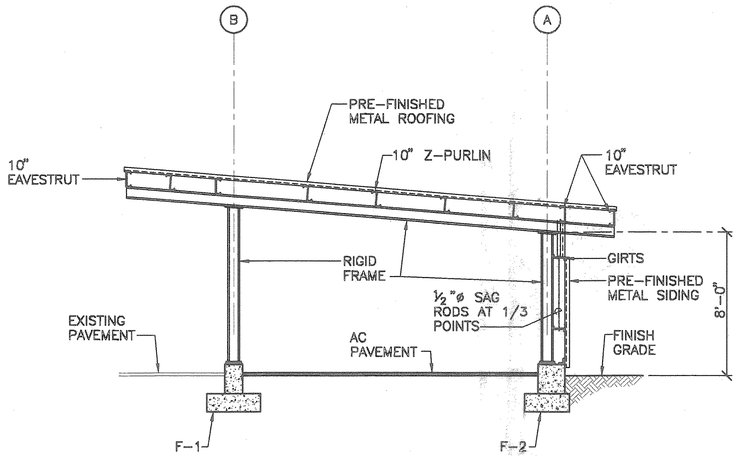

1 / P-13 CROSS SECTION
SCALE: 1/4"=1'-0"

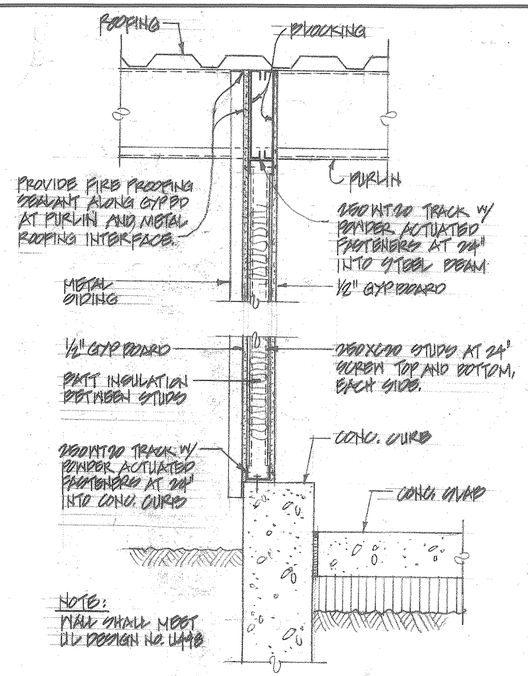

A / P-13 DETAIL "A" - 1-HR FIRE WALL
NOT TO SCALE

REVISION	DATE	DESCRIPTION	MADE BY	APPROVED

Planning - Engineering - Environmental Services - Photogrammetry - Surveying - Construction Management
R. M. TOWILL CORPORATION
808 842 1133 420 Waiakamilo Road Suite 411 Honolulu Hawaii 96817-4941

KEN KAZUO HAYASHIDA
LICENSED PROFESSIONAL ENGINEER
No. 6818-S
HAWAII, U.S.A.

THIS WORK WAS PREPARED BY ME OR UNDER MY SUPERVISION.

HAWAII COMMUNITY DEVELOPMENT AUTHORITY
STATE OF HAWAII
HONOLULU, HAWAII

KAKA'AKO COMMUNITY DEVELOPMENT DISTRICT
IMPROVEMENT DISTRICT 9
ILALO STREET IMPROVEMENTS

PROPERTY MODIFICATIONS
CARPORT -
BUILDING SECTION

ENGINEER: SK
DRAFTSMAN: DO, DA, KS
CHECKED BY: KKH
DATE: JULY 25, 2000

EXECUTIVE DIRECTOR, HAWAII COMMUNITY DEVELOPMENT AUTHORITY

FILE	POCKET	FOLDER	NO.

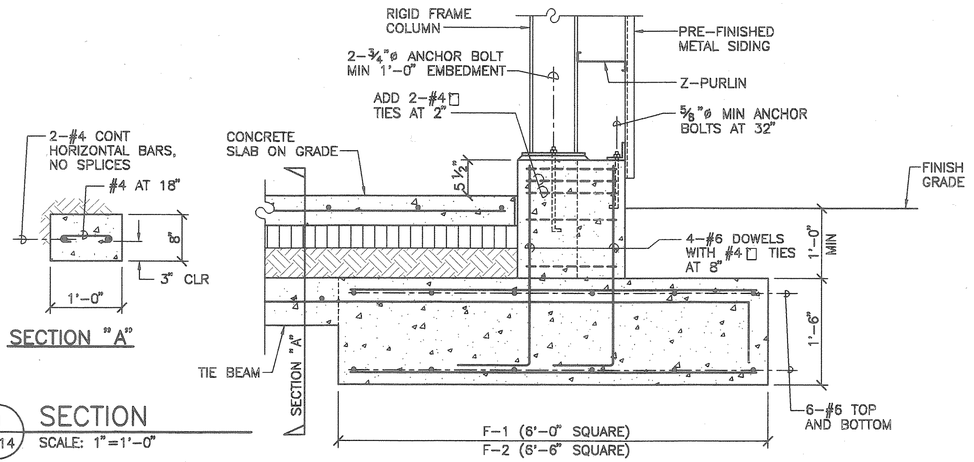

1 P–14 SECTION
SCALE: 1"=1'–0"

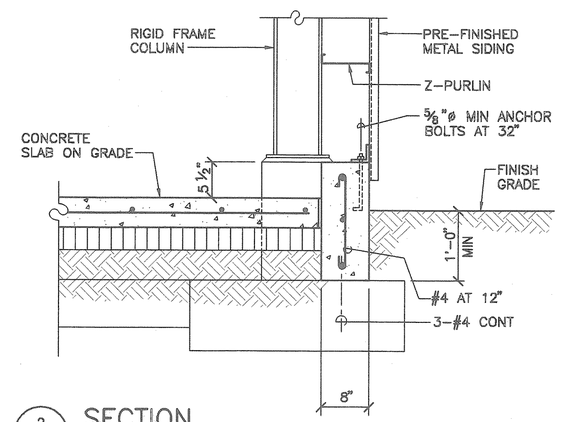

2 P–14 SECTION
SCALE: 1"=1'–0"

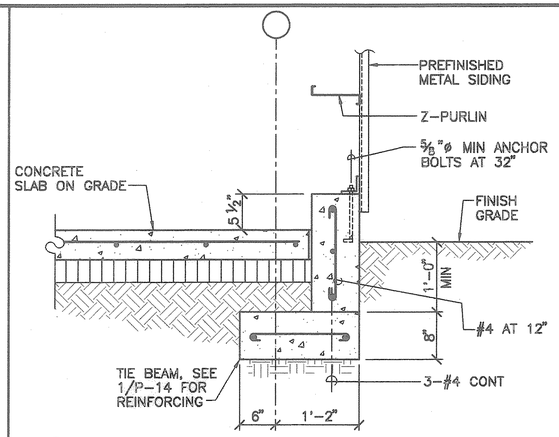

3 P–14 SECTION
SCALE: 1"=1'–0"

REVISION	DATE	DESCRIPTION	MADE BY	APPROVED

Planning – Engineering – Environmental Services – Photogrammetry – Surveying – Construction Management
R. M. TOWILL CORPORATION
808 842 1133 420 Waiakamilo Road Suite 411 Honolulu Hawaii 96817–4941

KEN KAZUO HAYASHIDA
LICENSED PROFESSIONAL ENGINEER
No. 6818–S
HAWAII, U.S.A.

THIS WORK WAS PREPARED BY ME OR UNDER MY SUPERVISION.

HAWAII COMMUNITY DEVELOPMENT AUTHORITY
STATE OF HAWAII
HONOLULU, HAWAII

KAKA'AKO COMMUNITY DEVELOPMENT DISTRICT
IMPROVEMENT DISTRICT 9
ILALO STREET IMPROVEMENTS

PROPERTY MODIFICATIONS CARPORT – FOUNDATION SECTIONS AND DETAILS

ENGINEER: SK
DRAFTSMAN: DO, DA, KS
CHECKED BY: KKH
DATE: JULY 25, 2000

EXECUTIVE DIRECTOR, HAWAII COMMUNITY DEVELOPMENT AUTHORITY

FILE	POCKET	FOLDER	NO.

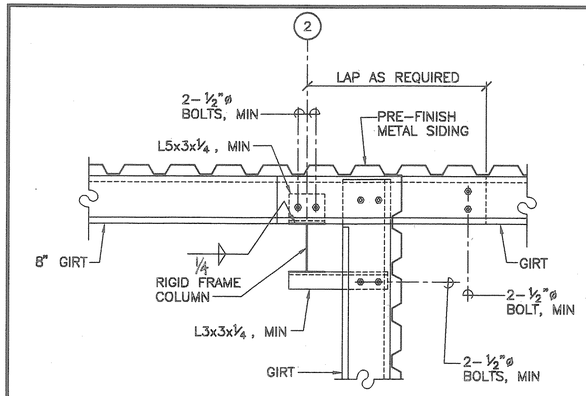

PLAN

1 P–15 SECTION
SCALE: 1"=1'–0"

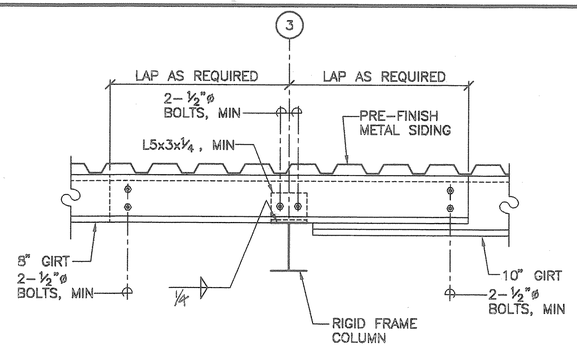

PLAN

2 P–15 SECTION
SCALE: 1"=1'–0"

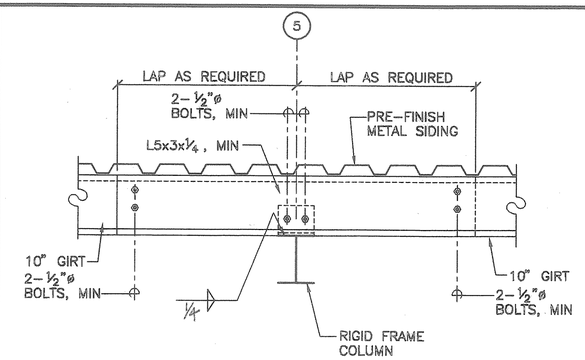

PLAN

3 P–15 SECTION
SCALE: 1"=1'–0"

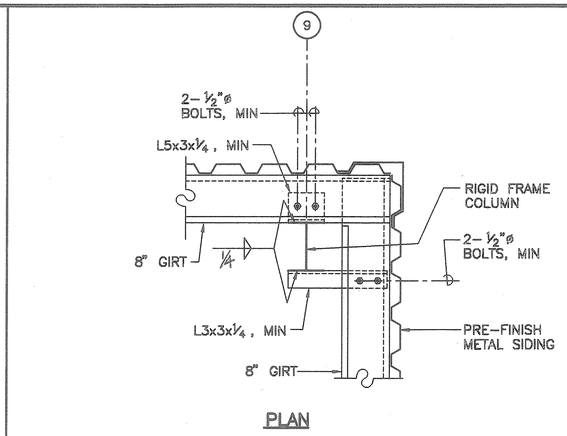

PLAN

4 P–15 SECTION
SCALE: 1"=1'–0"

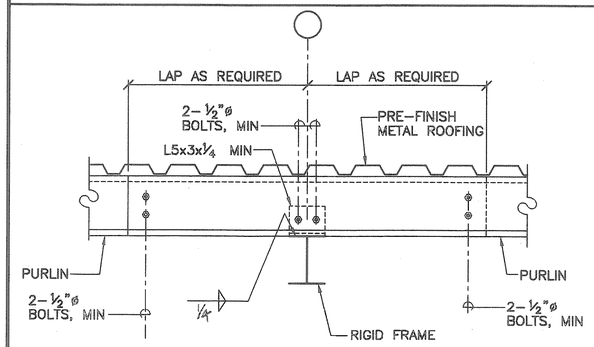

5 P–15 SECTION
SCALE: 1"=1'–0"

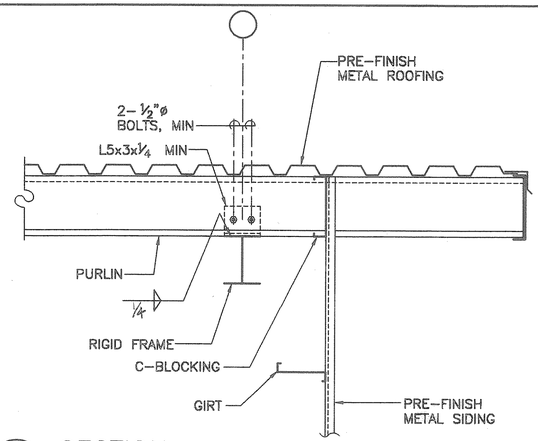

6 P–15 SECTION
SCALE: 1"=1'–0"

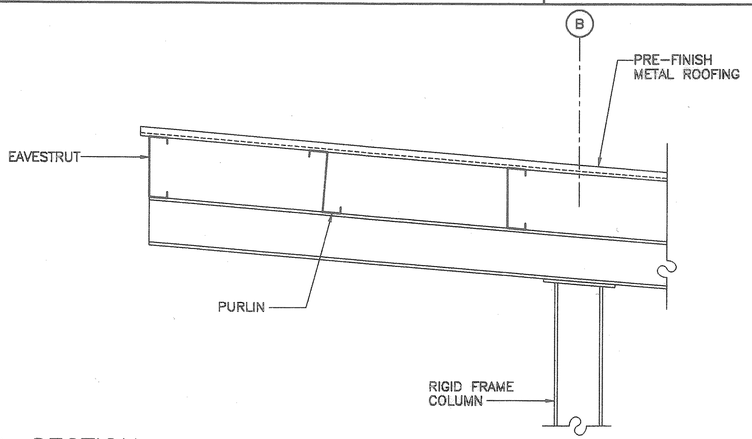

7 P–15 SECTION
SCALE: 1"=1'–0"

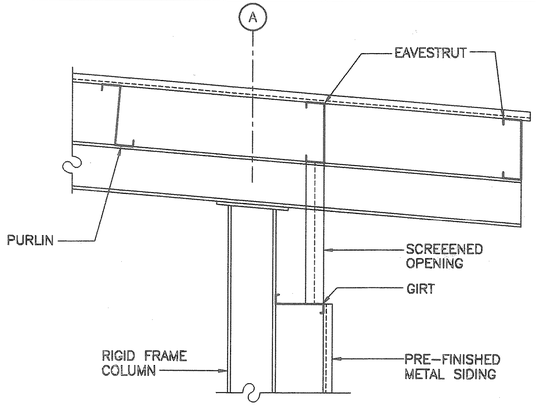

8 P–15 SECTION
SCALE: 1"=1'–0"

REVISION	DATE	DESCRIPTION	MADE BY	APPROVED

Planning – Engineering – Environmental Services – Photogrammetry – Surveying – Construction Management
R. M. TOWILL CORPORATION
808 842 1133 420 Waiakamilo Road Suite 411 Honolulu Hawaii 96817–4941

KEN KAZUO HAYASHIDA
LICENSED PROFESSIONAL ENGINEER
No. 6818–S
HAWAII, U.S.A.

THIS WORK WAS PREPARED BY ME OR UNDER MY SUPERVISION.

HAWAII COMMUNITY DEVELOPMENT AUTHORITY
STATE OF HAWAII
HONOLULU, HAWAII

KAKA'AKO COMMUNITY DEVELOPMENT DISTRICT
IMPROVEMENT DISTRICT 9
ILALO STREET IMPROVEMENTS

PROPERTY MODIFICATIONS CARPORT – ROOF SECTIONS AND DETAILS

ENGINEER: SK
DRAFTSMAN: DO, DA, KS
CHECKED BY: KKH
DATE: JULY 25, 2000

EXECUTIVE DIRECTOR, HAWAII COMMUNITY DEVELOPMENT AUTHORITY

"RECORD DRAWINGS"

FILE	POCKET	FOLDER	NO.

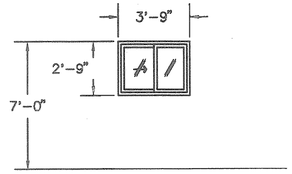

ALUMINUM WINDOW
1/4" CLR GLASS

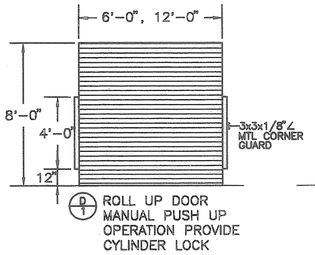

ROLL UP DOOR
MANUAL PUSH UP
OPERATION PROVIDE
CYLINDER LOCK

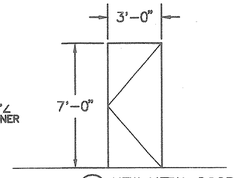

NEW METAL DOOR
SEE SPECS FOR
HARDWARE

DOOR AND WINDOW
SCHEDULE
SCALE:1/4"=1'-0"

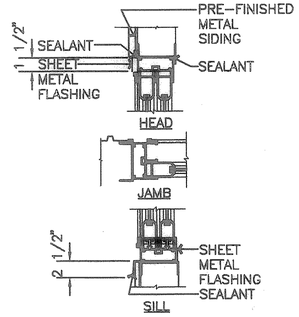

WINDOW DETAILS
SCALE: 1 1/2"=1'-0"

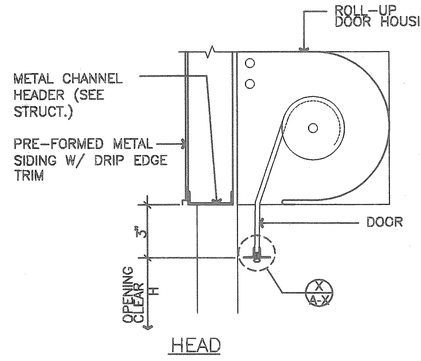

HEAD

HEAD DETAIL
SCALE: 1 1/2"=1-0"

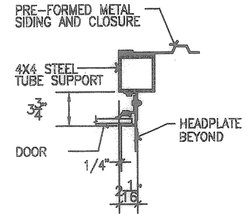

JAMB DETAIL
SCALE: 1 1/2" =1'-0"

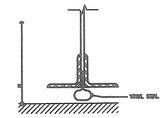

DOOR BOTTOM DETAIL
SCALE:

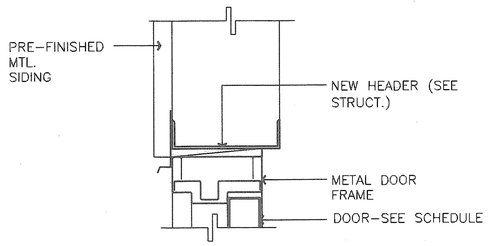

HEAD/JAMB (SIM.)

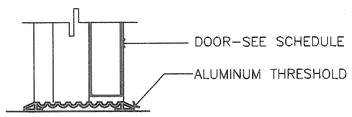

THRESHOLD

DOOR HEAD/JAMB DETAIL
SCALE: 3"=1'-0"

REVISION	DATE	DESCRIPTION	MADE BY	APPROVED

Planning - Engineering - Environmental Services - Photogrammetry - Surveying - Construction Management
R. M. TOWILL CORPORATION
808 842 1133 420 Waiakamilo Road Suite 411 Honolulu Hawaii 96817-4941

HAWAII COMMUNITY DEVELOPMENT AUTHORITY
STATE OF HAWAII
HONOLULU, HAWAII

KAKA'AKO COMMUNITY
DEVELOPMENT DISTRICT
IMPROVEMENT DISTRICT 9
ILALO STREET IMPROVEMENTS

PROPERTY MODIFICATIONS
CARPORT - WINDOW
AND DOOR SCHEDULE

KEN KAZUO HAYASHIDA
LICENSED PROFESSIONAL ENGINEER
No. 6818-S
HAWAII, U.S.A.

THIS WORK WAS PREPARED BY
ME OR UNDER MY SUPERVISION.

ENGINEER: SK
DRAFTSMAN: DO, DA, KS
CHECKED BY: KKH
DATE: JULY 25, 2000

EXECUTIVE DIRECTOR, HAWAII COMMUNITY DEVELOPMENT AUTHORITY

FILE	POCKET	FOLDER	NO.

"RECORD DRAWINGS" P-16 SHEET 137 OF 140 SHEETS

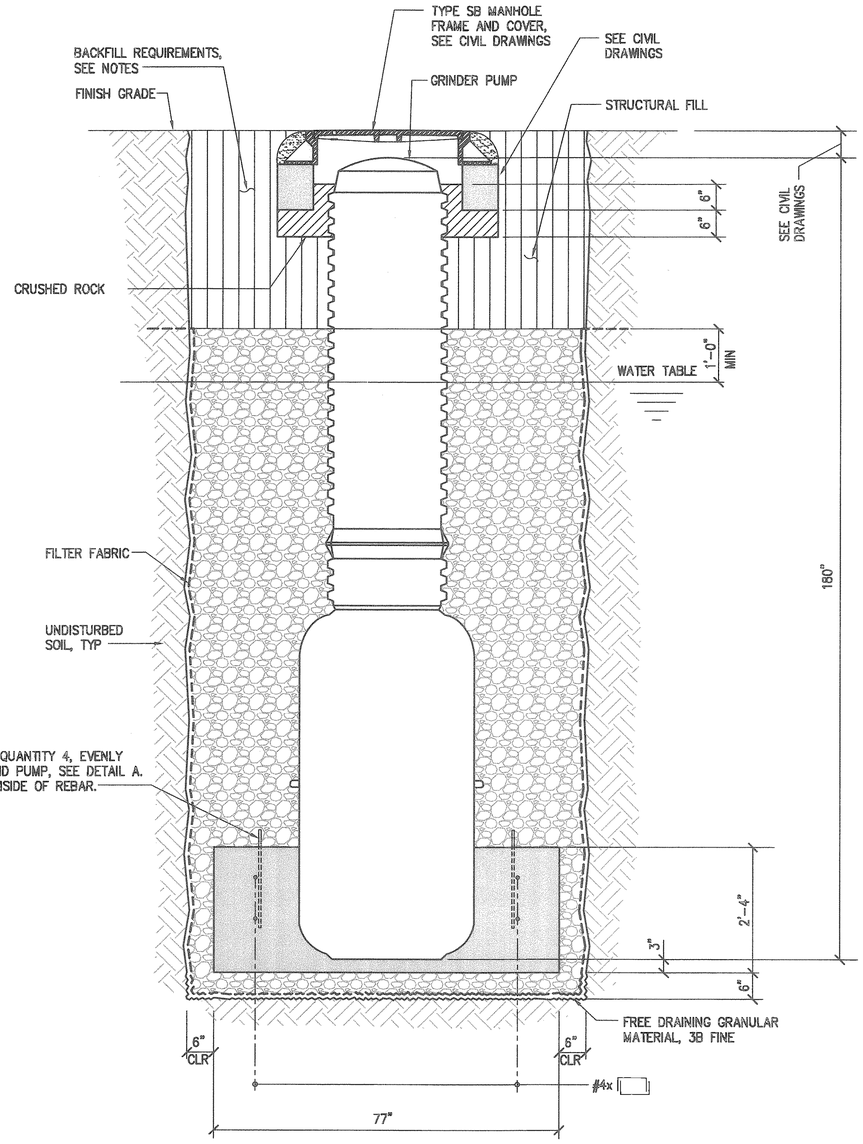

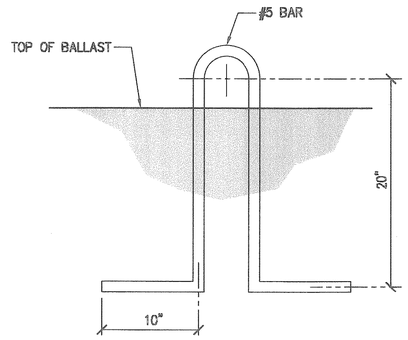

DETAIL A
N.T.S.

GENERAL NOTES:

1. LIFTING TECHNIQUES FOR THE PRE-CAST BLOCK AND PUMP ASSEMBLY SHALL BE ACCORDING TO PUMP MANUFACTURERS SPECIFICATIONS. PRE-CAST BLOCKS SHALL HAVE A MINIMUM DIAMETER AS SHOWN IN THE SCHEDULE.

2. CONCRETE SHALL BE REGULAR HARD ROCK CONCRETE AND SHALL HAVE 2500 psi MINIMUM 28 DAY COMPRESSIVE STRENGTH.

3. BACKFILL REQUIREMENTS:
   c. REFERENCE: GEOTECHNICAL INVESTIGATION BY GEOLABS-HAWAII, PROJECT W.O. 3933-10(B) DATED JUNE 18, 1999.
   b. BACKFILL BELOW WATER TABLE:
      1. BACKFILL BELOW THE WATER LEVEL SHALL CONSIST OF FREE-DRAINING GRANULAR MATERIALS, SUCH AS NO. 3B FINE GRAVEL (ASTM C 33, NO. 67 GRADATION), UP TO A MINIMUM OF 12 INCHES ABOVE THE HIGHEST ANTICIPATED GROUNDWATER LEVEL.
      2. THE FREE-DRAINING MATERIALS SHALL BE WRAPPED IN A NON-WOVEN FILTER FABRIC, SUCH AS MIRAFI 180N OR EQUIVALENT.
   c. BACKFILL ABOVE WATER TABLE:
      1. STRUCTURAL FILL SHALL CONSIST OF WELL GRADED MATERIAL FROM COARSE TO FINE WITH NO PARTICLES GREATER THAN 3 INCHES IN LARGEST DIMENSION. THE MATERIAL SHALL ALSO CONTAIN BETWEEN 10 AND 30 PERCENT PARTICLES PASSING THE NO. 200 SIEVE. THE MATERIALS SHALL HAVE A CALIFORNIA BEARING RATIO (CBR) VALUE OF 20 OR HIGHER AND A SWELL VALUE OF 1 PERCENT OR LESS WHEN TESTED IN ACCORDANCE WITH ASTM TEST DESIGNATION D 1883.
      2. BACKFILL SHALL BE PLACED IN THIN LIFTS, 8 INCHES IN LOOSE LIFT THICKNESS. EACH LIFT SHALL BE MECHANICALLY COMPACTED TO A MINIMUM OF 90 PERCENT RELATIVE COMPACTION. THE UPPER 3 FEET SHALL BE COMPACTED TO AT LEAST 95 PERCENT RELATIVE COMPACTION.

⚠9 ADDED NEW SHEET

REVISION	DATE	DESCRIPTION	MADE BY	APPROVED
⚠9	10/8/02	ADDED NEW SHEET	FK	

Planning - Engineering - Environmental Services - Photogrammetry - Surveying - Construction Management
R. M. TOWILL CORPORATION
808 842 1133 420 Waiakamilo Road Suite 411 Honolulu Hawaii 96817-4941

LICENSED PROFESSIONAL ENGINEER
MICHAEL P. HUNNEMANN
No. 10393-C
HAWAII, U.S.A.

EXPIRATION DATE OF THE LICENSE 4/30/2004
THIS WORK WAS PREPARED BY ME OR UNDER MY SUPERVISION

HAWAII COMMUNITY DEVELOPMENT AUTHORITY
STATE OF HAWAII
HONOLULU, HAWAII

KAKA'AKO COMMUNITY DEVELOPMENT DISTRICT
IMPROVEMENT DISTRICT 9
ILALO STREET IMPROVEMENTS

PROPERTY MODIFICATIONS TMK: 2-1-60:07, 09 & 10 BALLAST BLOCK DETAILS

ENGINEER: FK
DRAFTSMAN: JT
CHECKED BY: KKH
DATE: OCTOBER 8, 2002

EXECUTIVE DIRECTOR, HAWAII COMMUNITY DEVELOPMENT AUTHORITY

"RECORD DRAWINGS" P-16A SHEET . OF SHEETS

FILE	POCKET	FOLDER	NO.

ELECTRICAL SYMBOL LIST/MOUNTING HEIGHT SCHEDULE

MOUNTING HEIGHT FROM FLOOR TO		(SPECIAL MOUNTING HEIGHTS INDICATED ON PLAN)		
		SYMBOL		
TOP	℄	EXISTING	NEW	DESCRIPTION
			①	FLUORESCENT LUMINAIRE, CEILING MOUNTED (NUMERAL IN CIRCLE CORRESPONDS TO LUMINAIRE SCHEDULE)
				FLUORESCENT LUMINAIRE, SERVED THRU ADJOINING LUMINAIRE
			①H	LUMINAIRE, WALL MOUNTED (NUMERAL IN CIRCLE CORRESPONDS TO LUMINAIRE SCHEDULE)
	46"		^{a}	LIGHT SWITCH, WALL MOUNTED, 1P20A, 120/277V, 1HP MAX. (LETTER INDICATES LUMINAIRES CONTROLLED)
	18"		⊜	RECEPTACLE, DUPLEX, GFCI TYPE, 125V, NEMA TYPE 5-15R, WEATHERPROOF
			WP	WEATHERPROOF
			NL	NIGHT LIGHT CIRCUIT
			GND	GROUND
	18"		ⒿH	JUNCTION BOX, WALL MOUNTED
5'-0"			ⓉH	TIME SWITCH
6'-0"				PANELBOARD
				CONCEALED CONDUIT IN FINISHED FLOOR OR BELOW GRADE
				EXPOSED RACEWAY, PROVIDE STRAP 8'-0" ON CENTER MINIMUM (HASHMARKS INDICATE 3-WIRES WITHIN, ALL OTHER SIMILAR)
			A-1,3	HOMERUN ARROW TO PANELBOARD. LETTER INDICATES PANELBOARD, NUMBERS INDICATES CIRCUITS.

LUMINAIRE SCHEDULE

TYPE	DESCRIPTION	LAMPS
①	FLUORESCENT, SURFACE MOUNTED INDUSTRIAL, ALUMINUM HOUSING, IMPACT RESISTANT ACRYLIC DIFFUSER, DAMP LOCATION, 120V HPF BALLAST COLUMBIA #47A-4-232-EB8120-DMR OR APPROVED EQUIVALENT	2-32W T8 3500K
②	HIGH PRESSURE SODIUM FLOODLIGHT ALUMINUM HOUSING, DARK BRONZE FINISH, TEMPERED GLASS LENS, WET LOCATION, 120V HPF BALLAST GE# PF1S-15-S-O-H-1-6x6-DB-V OR APPROVED EQUIVALENT	1-150W HPS

HAWAII MODEL ENERGY CODE LIGHTING CALCULATIONS

INTERIOR LIGHTING POWER ALLOWANCE

BUILDING	AREA (SQ. FT.)	UPD (W/SQ. FT.)	AREA FACTOR	LPB (WATTS)
STORAGE	720	0.3	1.2	260
GARAGE	1,950	0.25	1.2	585

EXTERIOR LIGHTING POWER ALLOWANCE

AREA DESCRIPTION	ALLOWANCE	ELPA (WATTS)
PRIVATE PARKING LOT (3,000 SQ. FT.)	0.12W/SQ. FT.	360

REVISED ORDINANCES OF HONOLULU
CHAPTER 32
BUILDING ENERGY EFFICIENCY STANDARDS

THE BUILDING ENERGY EFFICIENCY STANDARDS HAVE BEEN REVIEWED AND TO THE BEST OF MY KNOWLEDGE THIS DESIGN SUBSTANTIALLY CONFORMS TO ELECTRICAL AND LIGHTING REQUIREMENTS OF SECTION 5.3 AND 6.3.

BUILDING ENERGY EFFICIENCY STANDARDS

EXTERIOR LIGHTING POWER ALLOWANCE 360 INSTALLED 300

INTERIOR LIGHTING POWER ALLOWANCE 845 INSTALLED 840

METHOD USED: (CHECK ONE) PRESCRIPTIVE ____ SYSTEM PERFORMANCE X

CALCULATIONS: (CHECK ONE) SEPARATE ____ ON DRAWINGS X

PANEL "P" 120/240 VOLTS, 1 PHASE, 3 WIRE; 100 AMP MAIN LUGS; MIN AIC: 10,000; MOUNTING: SURFACE

WIRE SIZE (AWG)	CKT NO	USE	CKT BKR POLE	CKT BKR AMP	CONN LOAD (KVA) PHASE A	CONN LOAD (KVA) PHASE B	CKT BKR AMP	CKT BKR POLE	USE	CKT NO	WIRE SIZE (AWG)
12	1	RECEPTACLES	1	20	1.2	0.8	20	1	LIGHTS	2	12
12	3	RECEPTACLES	1	20		1.0	0.3	20	1	LIGHTS	4	12	NL
12	5	RECEPTACLES	1	20	1.0	–	20	1	PFB	6	–	
10	7	SECURITY SYSTEM	1	20		1.0	–	20	1	PFB	8	–	
10	9	SPARE	1	20	1.0	–	20	1	PFB	10	–	
10	11	SPARE	1	20		1.0	–	20	1	PFB	12	–	
		CONNECTED LOAD/PHASE			4.0	3.3					
		TOTAL CONNECTED LOAD			7.3 KVA						
		DEMAND FACTOR			0.5						
		TOTAL DEMAND LOAD			3.7	KVA= 18 AMPS					

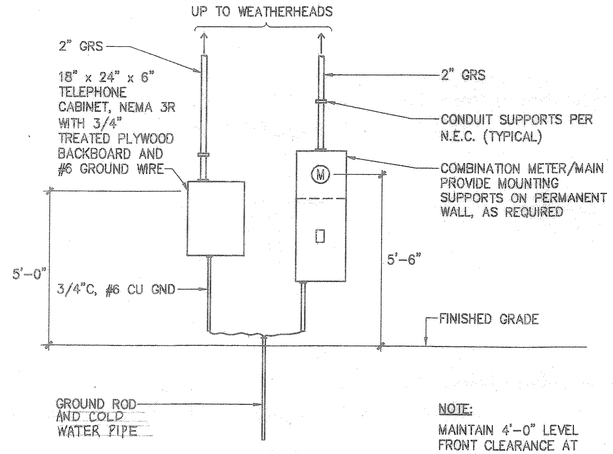

A P-17 SERVICE EQUIPMENT ELEVATION
NOT TO SCALE

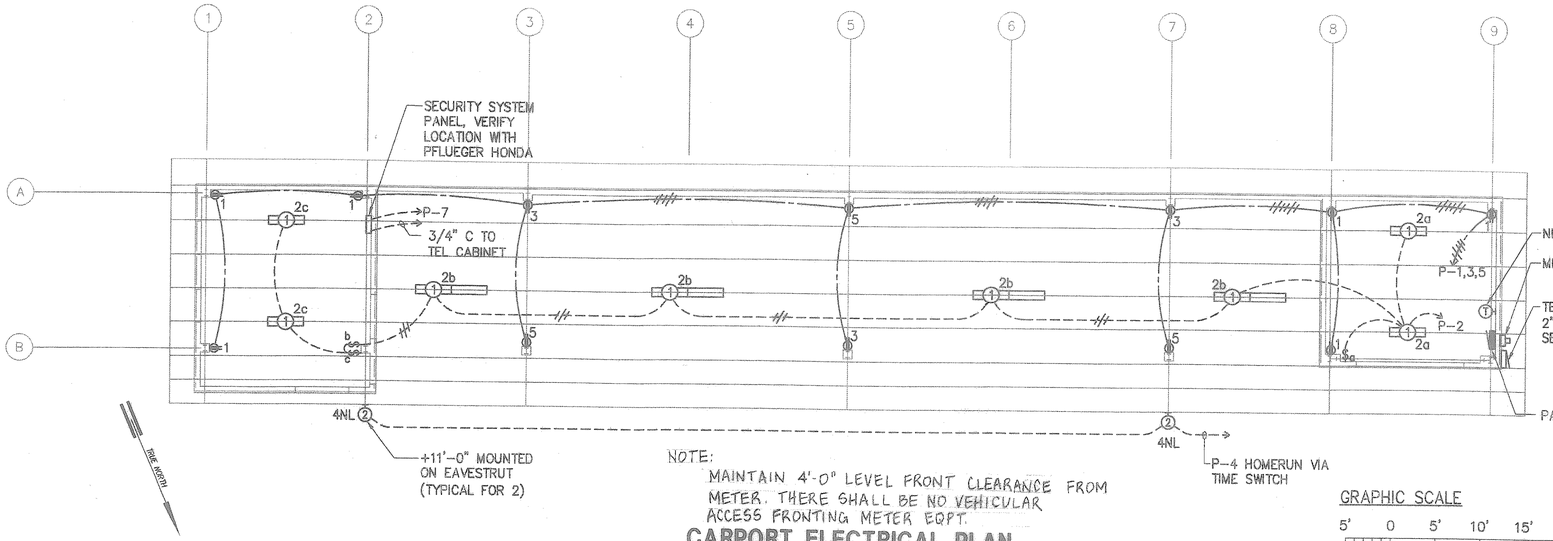

NOTE:
MAINTAIN 4'-0" LEVEL FRONT CLEARANCE FROM METER. THERE SHALL BE NO VEHICULAR ACCESS FRONTING METER EQPT.

CARPORT ELECTRICAL PLAN
SCALE: 1/8" = 1'-0"

GRAPHIC SCALE
5' 0 5' 10' 15' 20' 25' 30' 35' 40'
1/8" = 1'-0"

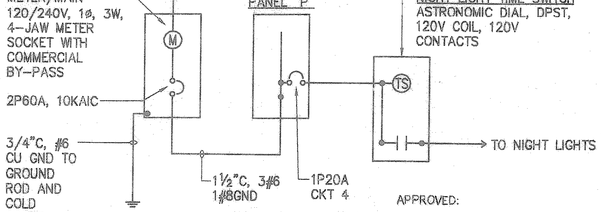

APPROVED:

B P-17 ONE-LINE DIAGRAM
NO SCALE

DRAWING REVIEW
Reviewed for HECO's Facilities Only
Date 8/9/00 By [signature]
Engineering Department
Hawaiian Electric Company, Inc.

HECO's review of these drawings shall in no way relieve the Customer, its Consultant, its Contractor or anyone acting on the Customer's behalf from the responsibility for engineering, design, materials, and any other liability associated with this Project.

HAWAIIAN ELECTRIC COMPANY, INC DATE

GTE/HAWAIIAN TEL 8/7/00 DATE

REVISION	DATE	DESCRIPTION	MADE BY	APPROVED

Planning - Engineering - Environmental Services - Photogrammetry - Surveying - Construction Management
R. M. TOWILL CORPORATION
808 842 1133 420 Waiakamilo Road Suite 411 Honolulu Hawaii 96817-4941

VINCENT K. MIYAGAWA LICENSED PROFESSIONAL ENGINEER No. 6534-E HAWAII, U.S.A.

THIS WORK WAS PREPARED BY ME OR UNDER MY SUPERVISION.
ECS, INC.
By [signature]
Its PROJECT ENGINEER
Date JULY 21, 2000

HAWAII COMMUNITY DEVELOPMENT AUTHORITY
STATE OF HAWAII
HONOLULU, HAWAII
KAKA'AKO COMMUNITY DEVELOPMENT DISTRICT
IMPROVEMENT DISTRICT 9
ILALO STREET IMPROVEMENTS
CARPORT ELECTRICAL PLAN - TMK: 2-1-59:01

ENGINEER: MA CHECKED BY: VM
DRAFTSMAN: RD DATE: JULY 21, 2000
[signature]
EXECUTIVE DIRECTOR, HAWAII COMMUNITY DEVELOPMENT AUTHORITY

FILE	POCKET	FOLDER	NO.

FILENAME: 60-32p2

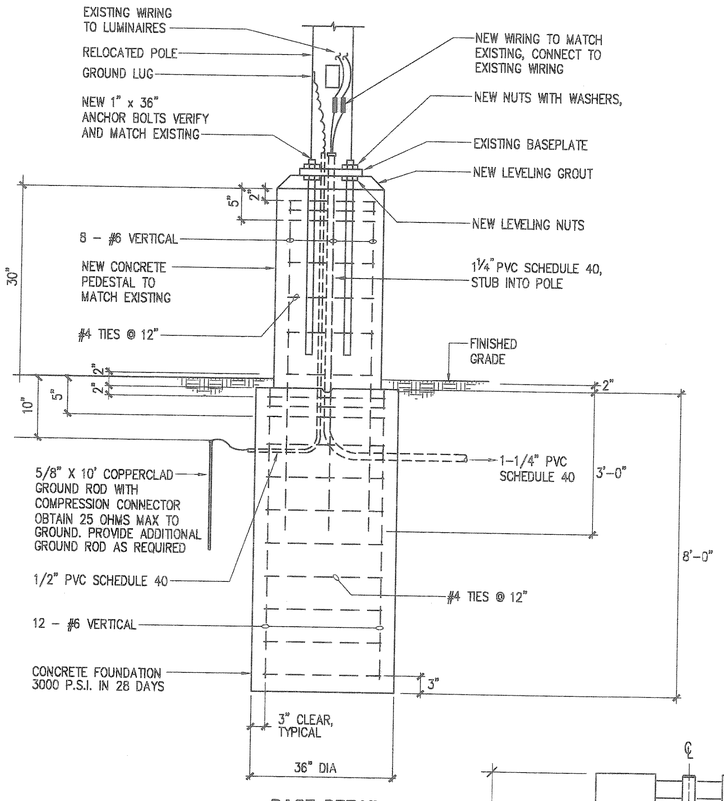

BASE DETAIL

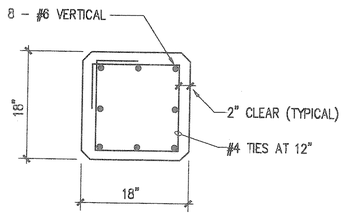

SECTION AT PEDESTAL

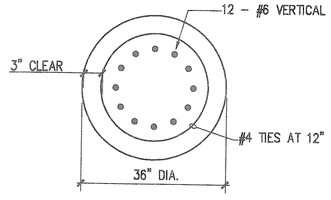

FOUNDATION SECTION (BELOW GRADE)

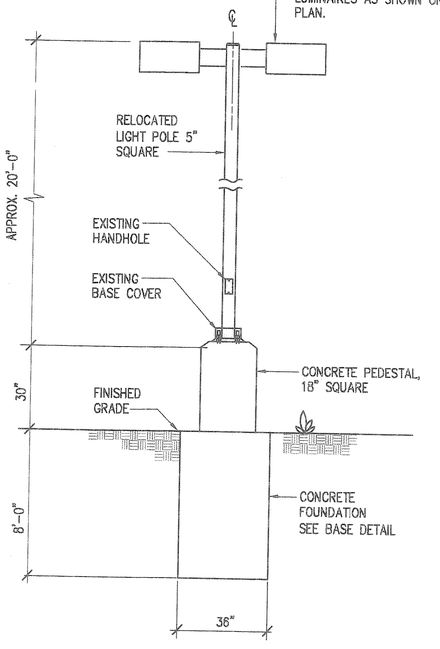

ELEVATION

A P-18 RELOCATED LIGHT POLE

NOT TO SCALE

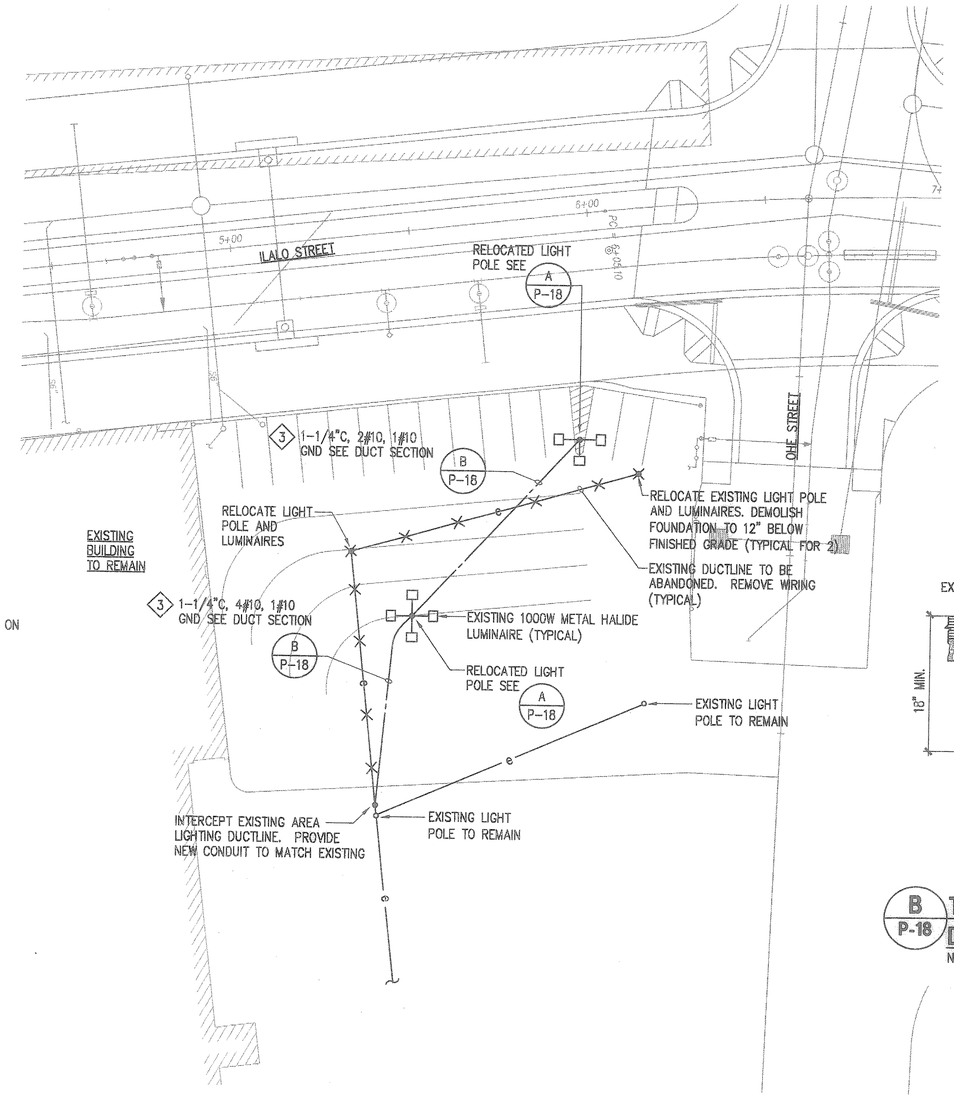

PARTIAL AREA LIGHTING PLAN

SCALE: 1" = 20'

TRUE NORTH

GRAPHIC SCALE:

1"=20' 20 0 20 40

SCALE IN FEET

GENERAL NOTES:

1. DIMENSIONS AND MEASUREMENTS OF EXISTING LIGHT POLES AND APPARATUS ARE APPROXIMATE AND ARE TO BE USED FOR REFERENCE ONLY. CONTRACTOR SHALL VERIFY DIMENSIONS AND CONDITIONS IN THE FIELD.
2. COORDINATE ALL WORK WITH PFLUEGER HONDA

3 VERIFY EXISTING AREA LIGHTING CIRCUIT ASSIGNMENTS. PROVIDE NEW WIRING TO MATCH EXISTING.

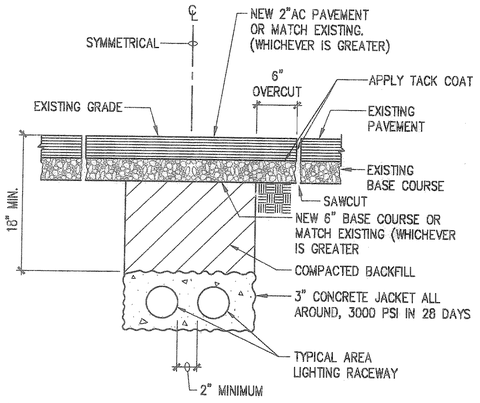

B P-18 TYPICAL CONCRETE ENCASED DUCT SECTION

NOT TO SCALE

REVISION	DATE	DESCRIPTION	MADE BY	APPROVED

Planning – Engineering – Environmental Services – Photogrammetry – Surveying – Construction Management
R. M. TOWILL CORPORATION
808 842 1133 420 Waiakamilo Road Suite 411 Honolulu Hawaii 96817-4941

VINCENT K. MIYAGAWA LICENSED PROFESSIONAL ENGINEER No. 4534-E HAWAII, U.S.A.

THIS WORK WAS PREPARED BY ME OR UNDER MY SUPERVISION.

ECS, INC.

By _____

Its PROJECT ENGINEER

Date JULY 21, 2000

HAWAII COMMUNITY DEVELOPMENT AUTHORITY
STATE OF HAWAII
HONOLULU, HAWAII

KAKA'AKO COMMUNITY DEVELOPMENT DISTRICT
IMPROVEMENT DISTRICT 9
ILALO STREET IMPROVEMENTS

LIGHT POLE DETAILS
TMK: 2-1-59:04 & 05

ENGINEER: MA CHECKED BY: VM
DRAFTSMAN: RD DATE: JULY 21, 2000

EXECUTIVE DIRECTOR, HAWAII COMMUNITY DEVELOPMENT AUTHORITY

FILE	POCKET	FOLDER	NO.

FILENAME: 60-32.p1

"RECORD DRAWINGS" P-18 SHEET 139 OF 140 SHEETS

NOTES:

1. SEAL CONDUITS WITH DUCT SEAL AFTER INSTALLATION OF CABLES.
2. BUSHINGS AND GROUND ROD CONNECTIONS MUST BE AT A LEVEL EASILY ACCESSIBLE FOR MAINTENANCE THRU HANDHOLE.
3. ALL EXPOSED ANCHOR BOLTS AND NUTS SHALL BE GREASED AFTER INSTALLATION.

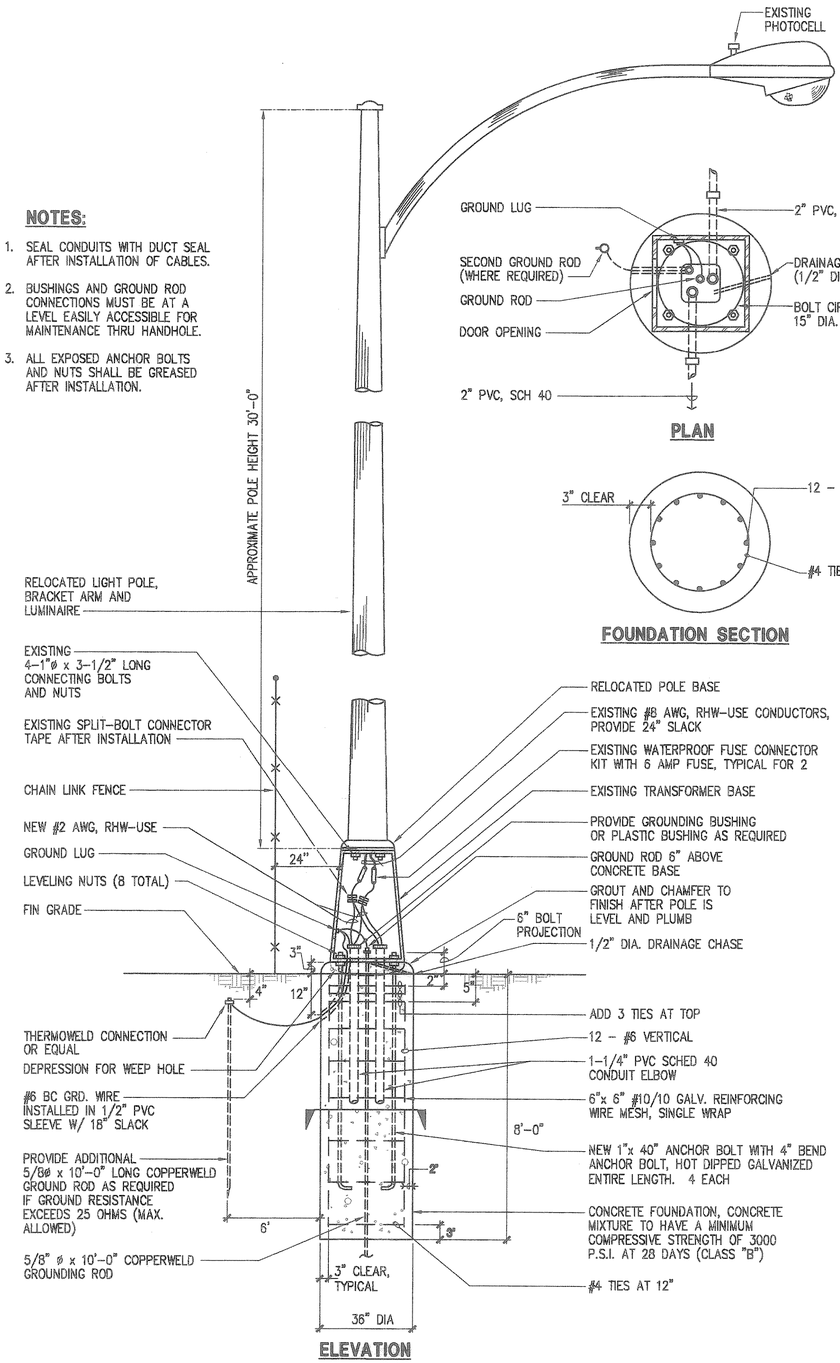

A P-19 RELOCATED PARKING LOT LIGHT POLE

NOT TO SCALE

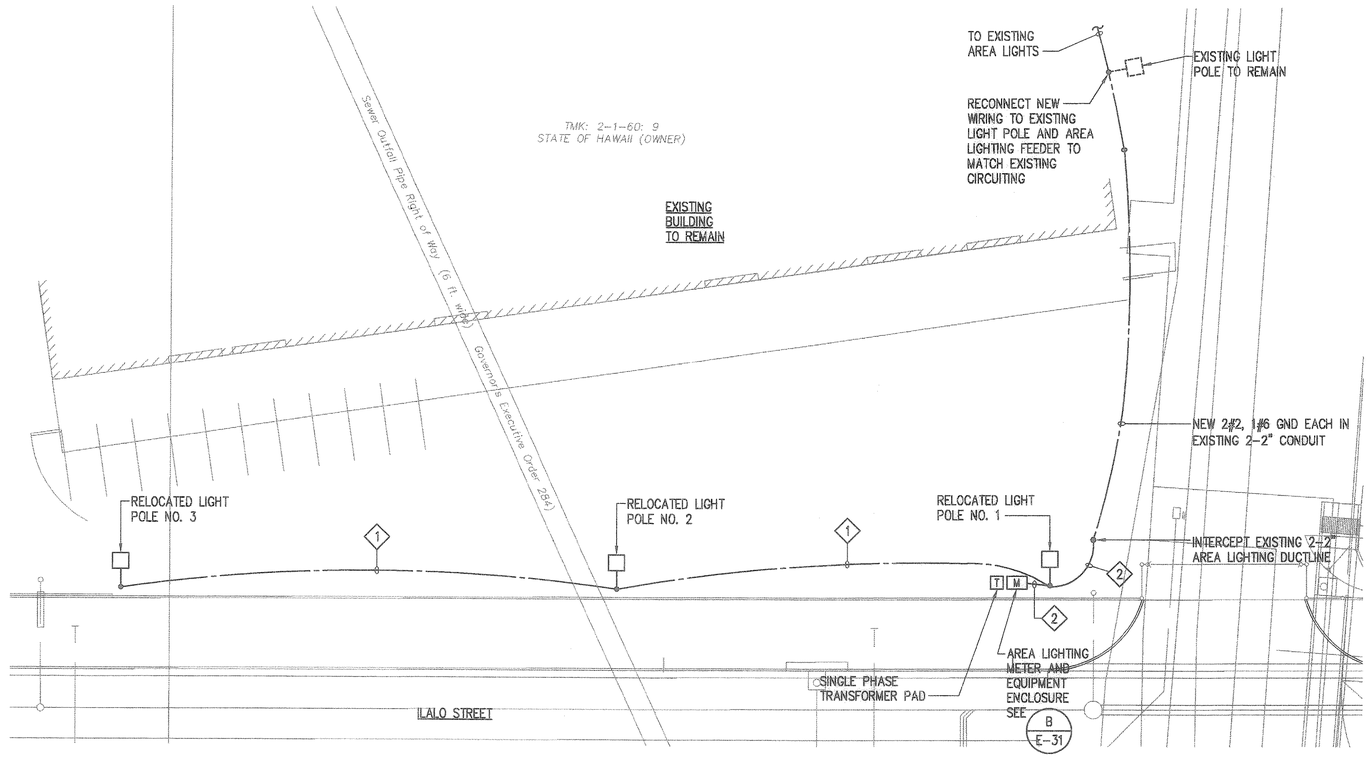

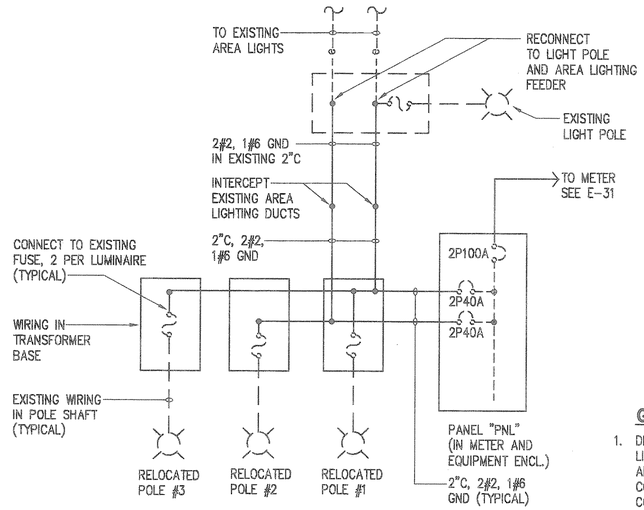

NOTE:

ALL CIRCUIT BREAKERS AT PANEL "PNL" ARE EXISTING. DISTRIBUTE LIGHT POLE CIRCUIT ASSIGNMENTS TO MATCH EXISTING.

B P-19 AREA LIGHTING WIRING DIAGRAM

NOT TO SCALE

NOTES:

1. 2" PVC, SCHDULE 40 CONDUIT, 2#2, 1#6 GND, SEE DUCT SECTION B P-18
2. 2-2" PVC, SCHDULE 40 CONDUIT, 2#2, 1#6 GND, SEE DUCT SECTION B P-18

TRUE NORTH

PARTIAL ELECTRICAL SITE PLAN

SCALE: 1" = 20'

GENERAL NOTES:

1. DIMENSIONS AND MEASUREMENTS OF EXISTING LIGHT POLES AND APPARATUS ARE APPROXIMATE AND ARE TO BE USED FOR REFERENCE ONLY. CONTRACTOR SHALL VERIFY DIMENSIONS AND CONDITIONS IN THE FIELD.
2. COORDINATE ALL WORK WITH PRODUCE CENTER DEVELOPMENT, LTD.

GRAPHIC SCALE:

1"=20' 20 0 20 40

SCALE IN FEET

REVISION	DATE	DESCRIPTION	MADE BY	APPROVED

Planning - Engineering - Environmental Services - Photogrammetry - Surveying - Construction Management
R. M. TOWILL CORPORATION
808 842 1133 420 Waiakamilo Road Suite 411 Honolulu Hawaii 96817-4941

VINCENT K. MIYAGAWA LICENSED PROFESSIONAL ENGINEER No. 4534-E HAWAII, U.S.A.

THIS WORK WAS PREPARED BY ME OR UNDER MY SUPERVISION.

ECS, INC.

By _____

Its PROJECT ENGINEER

Date JULY 21, 2000

HAWAII COMMUNITY DEVELOPMENT AUTHORITY
STATE OF HAWAII
HONOLULU, HAWAII

KAKA'AKO COMMUNITY DEVELOPMENT DISTRICT
IMPROVEMENT DISTRICT 9
LALO STREET IMPROVEMENTS

LIGHT POLE DETAILS -
TMK: 2-1-60:09

ENGINEER: MA CHECKED BY: VM
DRAFTSMAN: CM DATE: JULY 21, 2000

EXECUTIVE DIRECTOR, HAWAII COMMUNITY DEVELOPMENT AUTHORITY

FILENAME: 60-32p3

"RECORD DRAWINGS" P-19 SHEET 140 OF 140 SHEETS

FILE	POCKET	FOLDER	NO.

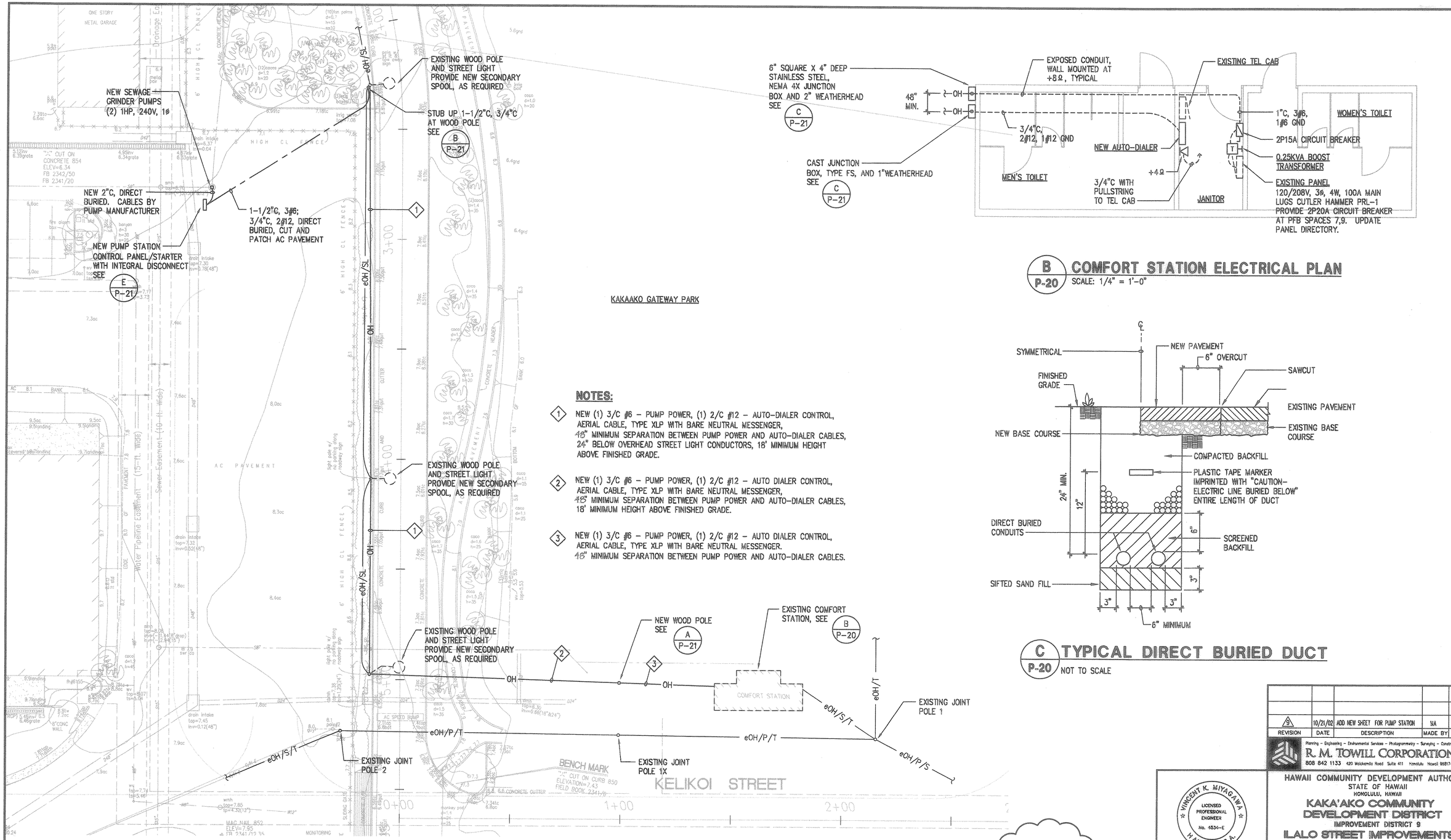

A P-20 PUMP STATION SITE PLAN

SCALE: 1" = 20'

B P-20 COMFORT STATION ELECTRICAL PLAN

SCALE: 1/4" = 1'-0"

NOTES:

1. NEW (1) 3/C #6 – PUMP POWER, (1) 2/C #12 – AUTO-DIALER CONTROL, AERIAL CABLE, TYPE XLP WITH BARE NEUTRAL MESSENGER, 48" MINIMUM SEPARATION BETWEEN PUMP POWER AND AUTO-DIALER CABLES, 24" BELOW OVERHEAD STREET LIGHT CONDUCTORS, 18' MINIMUM HEIGHT ABOVE FINISHED GRADE.
2. NEW (1) 3/C #6 – PUMP POWER, (1) 2/C #12 – AUTO DIALER CONTROL, AERIAL CABLE, TYPE XLP WITH BARE NEUTRAL MESSENGER, 48" MINIMUM SEPARATION BETWEEN PUMP POWER AND AUTO-DIALER CABLES, 18' MINIMUM HEIGHT ABOVE FINISHED GRADE.
3. NEW (1) 3/C #6 – PUMP POWER, (1) 2/C #12 – AUTO DIALER CONTROL, AERIAL CABLE, TYPE XLP WITH BARE NEUTRAL MESSENGER. 48" MINIMUM SEPARATION BETWEEN PUMP POWER AND AUTO-DIALER CABLES.

C P-20 TYPICAL DIRECT BURIED DUCT

NOT TO SCALE

NEW SHEET 9

REVISION	DATE	DESCRIPTION	MADE BY	APPROVED
9	10/21/02	ADD NEW SHEET FOR PUMP STATION	MA	

R. M. TOWILL CORPORATION
Planning – Engineering – Environmental Services – Photogrammetry – Surveying – Construction Management
808 842 1133 420 Waiakamilo Road Suite 411 Honolulu Hawaii 96817-4941

VINCENT K. MIYAGAWA — LICENSED PROFESSIONAL ENGINEER No. 4534-E — HAWAII, U.S.A.

THIS WORK WAS PREPARED BY ME OR UNDER MY SUPERVISION.
By ECS, INC.
Its PROJECT ENGINEER
APRIL 30, 2004
Expiration Date Of The License

HAWAII COMMUNITY DEVELOPMENT AUTHORITY
STATE OF HAWAII
HONOLULU, HAWAII
KAKA'AKO COMMUNITY DEVELOPMENT DISTRICT
IMPROVEMENT DISTRICT 9
ILALO STREET IMPROVEMENTS

PUMP STATION SITE PLAN

ENGINEER: MA CHECKED BY: VM
DRAFTSMAN: CM DATE: 10/21/02

EXECUTIVE DIRECTOR, HAWAII COMMUNITY DEVELOPMENT AUTHORITY

FILE	POCKET	FOLDER	NO.

"RECORD DRAWINGS"

P-20 SHEET 140A OF SHEETS

10/21/02-9:18 Y:\060\e60-32BG-12\60-32BG-12S01.dwg

NOTES:

1. IF NEW, POLE SHALL BE TREATED WITH PENTACHLOROPHENOL USING THE CEFLON PROCESS BY LICENSED TERMITE TREATMENT COMPANY.
2. TERMITE TREAT THE BOTTOM OF THE HOLE AND BACKFILL MATERIAL WITH AQUEOUS CHEMICAL SOLUTION CONSISTING OF 0.5% ALDRIN OR 0.5% DRAGNET. MINIMUM 5 GALLONS OF THE SOLUTION SHALL BE USED FOR EACH POLE.

   APPLICATION SHALL BE PERFORMED BY CONTRACTOR LICENSED FOR THIS TYPE OF WORK.

   TREATMENT SHALL BE DONE AS THE HOLE IS BEING BACKFILLED.

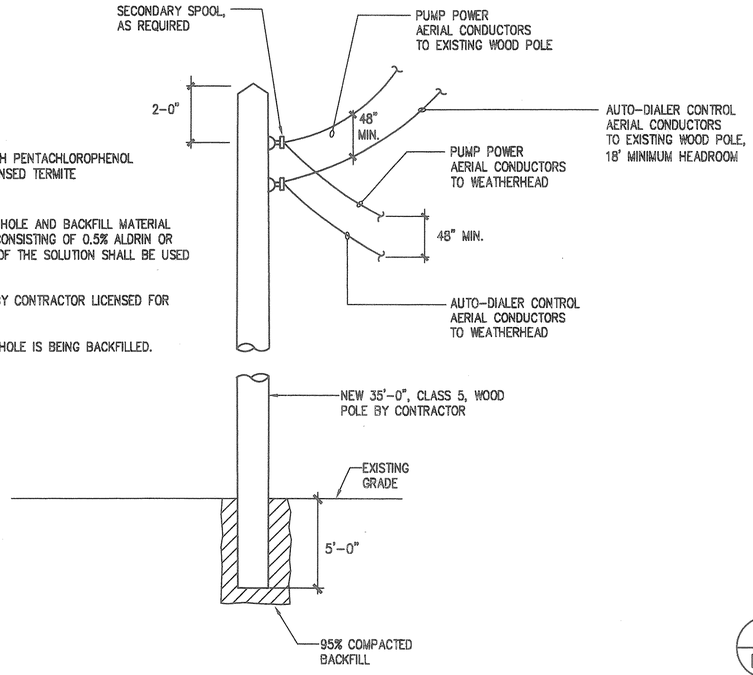

A P-21 WOOD POLE DETAIL
NOT TO SCALE

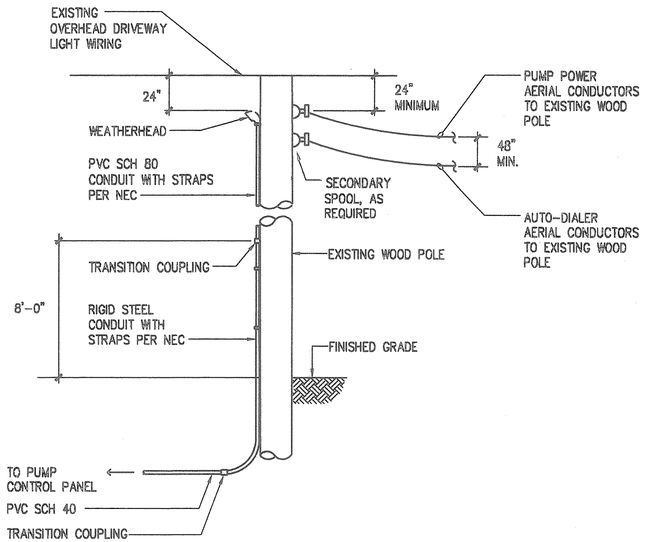

B P-21 TYPICAL CONDUIT STUB-UP AT WOOD POLE
NOT TO SCALE

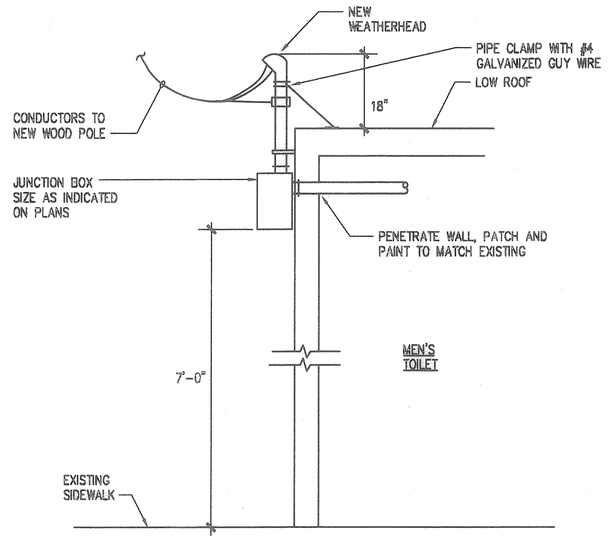

C P-21 TYPICAL JUNCTION BOX AT COMFORT STATION
NOT TO SCALE

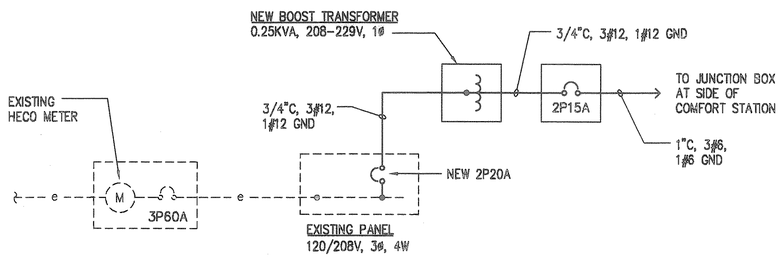

D P-21 ONE LINE DIAGRAM
NO SCALE

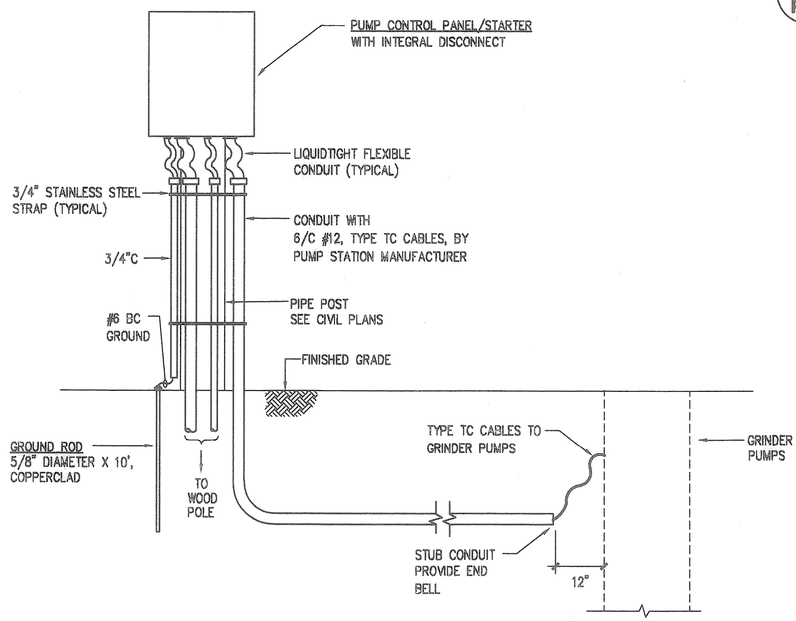

E P-21 PUMP CONTROL PANEL
NOT TO SCALE

NEW SHEET 9

REVISION	DATE	DESCRIPTION	MADE BY	APPROVED
9	10/21/02	ADD NEW SHEET FOR PUMP STATION	MA	

Planning - Engineering - Environmental Services - Photogrammetry - Surveying - Construction Management
R. M. TOWILL CORPORATION
808 842 1133 420 Waiakamilo Road Suite 411 Honolulu Hawaii 96817-4941

VINCENT K. MIYAGAWA LICENSED PROFESSIONAL ENGINEER No. 4536-E HAWAII, U.S.A.

THIS WORK WAS PREPARED BY ME OR UNDER MY SUPERVISION.
ECS, INC.
By _____
Its PROJECT ENGINEER
APRIL 30, 2004
Expiration Date Of The License

HAWAII COMMUNITY DEVELOPMENT AUTHORITY
STATE OF HAWAII
HONOLULU, HAWAII

KAKA'AKO COMMUNITY DEVELOPMENT DISTRICT
IMPROVEMENT DISTRICT 9
ILALO STREET IMPROVEMENTS
PUMP STATION ELECTRICAL DETAILS

ENGINEER: MA CHECKED BY: VM
DRAFTSMAN: CM DATE: 10/21/02

EXECUTIVE DIRECTOR, HAWAII COMMUNITY DEVELOPMENT AUTHORITY

FILE	POCKET	FOLDER	NO.

"RECORD DRAWINGS" P-21 SHEET 140 OF SHEETS